Part Numbering Guide

By adding a prefix/suffix from below to a listed part number you can customize kit content and/or brand of product.

example:
TF92002, T92002X

Prefix

D	Part is OEM
T	Kit is TTK brand and carries a cork and rubber or molded rubber pan gasket. Applicable to P/R kits, OHK, MOK, BNK and SOK's.
TF	Kit is TTK brand and carries a fiber pan gasket. Applicable to P/R kits, OHK, MOK, BNK and SOK's.
B	Kit is Bryco brand and carries a cork and rubber or molded rubber pan gasket. Applicable to P/R kits, OHK, MOK, BNK and SOK's.
BF	Kit is Bryco brand and carries a fiber pan gasket. Applicable to P/R kits, OHK, MOK, BNK and SOK's.

Suffix

X	Kit does not include a pan gasket. Applicable to P/R kits, OHK, MOK, BNK and SOK's.
P	Kit includes molded pistons. Applicable to OHK, MOK, BNK and SOK's. The P is the last suffix (if kit includes molded gasket, suffix would be WP) except in the "MAX" line and the Box kits with "RAY", "BORG", and "DYN".
W	Kit includes a bonded rubber (metal to rubber or plastic to rubber) pan gasket. Applicable to P/R kits, OHK, MOK, BNK and SOK's.
T	Friction Plate is value brand of choice. Applicable to friction plates and friction modules.
R	Friction Plate is specific brand, from Raybestos. Applicable to friction plates, friction modules and bands.
W	Plate is specific brand, Borg Warner. Applicable to friction plates.
BW	Product is Borg Warner. Applicable to frictions, bands and other products.
RAY	Kit will contain friction plates 100% Raybestos brand This applies to MOK, BNK and SOK's.
BORG	Kit will contain friction plates 100% Borg Warner brand This applies to MOK, BNK and SOK's.
DYN	Kit will contain friction plates100% Exedy (Dynax) brand This applies to friction modules, MOK, BNK and SOK's.
MAX	High Performance Kit line. The "MAX" are the last three letters on the part number.

GM

Transmission	Series	Pg.
3T40 (125, 125C)	64000	4
3L30 (180, 180C)	24000	10
200, 200C, 2004R, 325, 325-4L	54000	14
250C, 350, 350C	44000	20
3L80 (400)	34000	26
4L30E	24000	34
4L60 (700R4), 4L60E, 4L65E, 4L70E	74000	40
4L80E, 4L85E	34000	50
4T40E, 4T45E	14000	58
440-T4, 4T60E, 4T65E	84000	64
4T60E, 4T65E	84000	70
4T80E	94000	78
5L40E, 5L50E	144000	84
6L45, 6L50, 6L80, 6L90	45000	90
6T40, 6T45, 6F35	46000	96
6T70, 6T75, 6F50, 6F55	25000	102
2ML70	174000	108
TAAT	10000	112
VT20, VT25-E	205000	116
POWERGLIDE (ALUMINUM CASE)	103000	120
1000, 2000, 2400	116000	124
AT540, MT640 (SERIES)	111000	132

FORD

4F27E (FN4A-EL)	138000	394
4R44E, 4R55E, 5R44E, 5R55E	56000	134
5R55N, 5R55S, 5R55W	16000	142
5R110W (TORQSHIFT)	136000	148
6F35	46000	96
6F50, 6F55	25000	102
6R60, 6R75, 6R80, 6HP26	49000	154
6R140	236000	160
C3, A4LD	56000	165
AOD, AODE, 4R70W, 4R75W, 4R70E, 4R75E	76000	170
AXOD, AXODE, AX4S	86000	180
AX4N, 4F50N	86000	190
C4, C5	26000	198
C6	36000	202
CD4E	96000	208
CFT30	206000	214
E4OD, 4R100	36000	218
FNR5 (FS5A-EL)	138000	400
HD-10 (ESCAPE)	133000	226
TF80SC, TF81SC, (AF21, AF40)	255000	228
FMX, FX, MX	106000	234

CHRYSLER

45RFE, 5-45RFE, 68RFE	72000	238
62TE	262000	244
A404, A413, A470, A670	32000	250
40RH, 42RH, 42RE, 44RE (A500)	12000	256
46RH, 46RE, 47RH, 47RE, 48RE (A518, A618)	22000	264
40TE, 41TE, 41TES (A604)	92000	272
42LE (A606)	62000	274
42RLE	82000	276
30RH, 32RH (A904)	12000	282
36RH, 37RH (A727)	22000	288
AS68RC (A465)	172000	294

AISIN

50-40LE, 50-42LE (AF14)	89000	300
55-50SN, 55-51SN (AF33), RE5F22A	89000	306
60-40LE (AF13), 60-41SN (AF17)	121000	312
450-43LE, A440, A442	141000	316
A440, A442	141000	320
80-40LE, 81-40LE, U440E	199000	322

HONDA

Type 1 - 4 Speed (2 Shaft)	60000	324
Type 2 - 4 Speed (3 Shaft)		328
Type 3		330
Type 5		332
Type 6		334
Type 7		336
Type 8		338
Type 10		340
Type 11		342
HONDA 4 SPEED (3 Shaft)		344
Type 12 - 5 Speed		348
Type 13		350
Type 14		352
Type 15		354
HONDA 5 SPEED		356
HONDA 6 SPEED	290000	359
HONDA CVT	140000	360
ELECTRICAL COMPONENTS	VARIOUS	362

HYUNDAI

A4CF1, A4CF2	41000	444
A5GF1, A5HF1	41000	442
A6LF2, A6MF2	211000	368
A6MF2	211000	374

MAZDA

F3A	18000	378
F4A-EL (4EAT-F)	38000	382
G4A-EL (4EAT-G), GF4A-EL (4EAT-GF)	28000	388
4F27E (FN4A-EL)	138000	394
FNR5 (FS5A-EL)	138000	400
JF506A (09A)	183000	406

MERCEDES

722.0, 722.1, 722.2	58000	412
722.3, 722.4, 722.5	68000	416
722.6	78000	420
722.9	288000	426

MITSUBISHI

KM170 - KM177-8	42000	432
A4AF3 - A4BF2	42000	434
F4A33 - W4A33	42000	436
F4A41, F4A51, F5A51, A5GF1, A5HF1	41000	442
A4CF1, A4CF2	41000	444
RA451, V4A51, R5A51, V5A51	142000	452

NISSAN

RL3F01A	43000	456
L3N71B, L4N71B, N4A-EL	53000	458
RL4F02A, RE4F02A	93000	462
RE4F03A, RE4F03B	83000	466
RE4F04A, RE4F04B, (4F20E), JF403E, LJ4A-EL	83000	470
RE4R01A, R4A-EL, RE4R03A	73000	476
RE4R03A, JR403E	73000	482
RE5R05A	173000	484
JF405E	83000	490
JR405E (RC4A-EL)	193000	492
JR710E (RE7R01A)	283000	498
RE0F06A, RE0F08A, RE0F09A, RE0F10A	203000	504
JF015E	323000	512

RENAULT

AD4, AD8, AR4	152000	517
DPO, AL4	252000	518

SUBARU

M41, M41A	13000	524
R4AX-EL	23000	526
4EAT	23000	528
5EAT	123000	534

TOYOTA

A40, A43, A40D, A46D	57000	538
A130L, A140E, A141E, MX17	67000	544
A240E, A247E	67000	546
A340E, A341E, A343E, A350E	97000	552
A540E, A541E	87000	558
A650E	187000	563
A750E, A760E, A761E, A960E	117000	564
AB60E	77000	570
U140E, U240E, U241E	167000	576
U150E, U151E, U250E	167000	582
U340E, U341E	127000	586
U660E, U760E	277000	590
P111 (PRIUS)	33000	596
AA80E (TL-80SN)	287000	598

VW

010, 087, 089, 090	65000	602
095, 096 (01M), 097 (01N), 098 (01P)	75000	604
JF404E	83000	609
09G, 09M (TF60SN) 09K (TF62SN)	265000	610
09D (TR60SN)	235000	615
01J	275000	616
02E (DCT)	865000	618

ZF

ZF4HP14,18	79000	620
ZF4HP16	145000	624
ZF4HP22,24	69000	630
ZF5HP18	179000	634
ZF5HP19,FL,FLA	175000	636
ZF5HP24,A	185000	640
ZF5HP30	159000	644
ZF6HP19,A	209000	648
ZF8HP45	319000	650

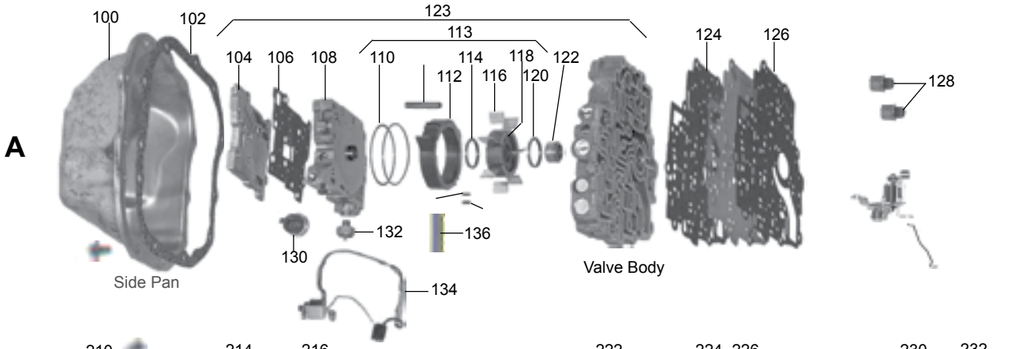
A
100
102
123
113
104
106
108
110
112
114
116
118
120
122
124
126
128
132
130
136
134
Side Pan
Valve Body

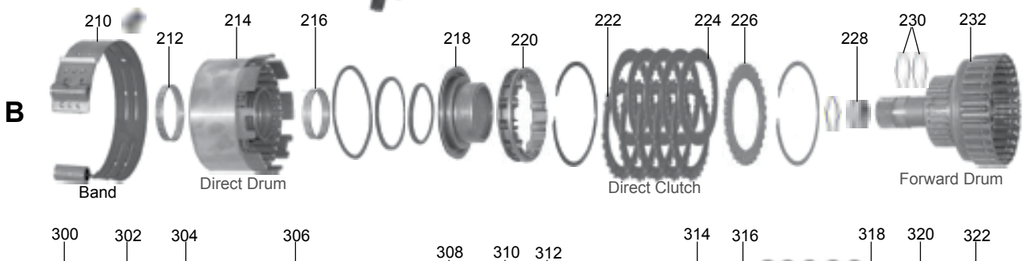
B
210
212
214
216
218
220
222
224
226
228
230
232
Band
Direct Drum
Direct Clutch
Forward Drum

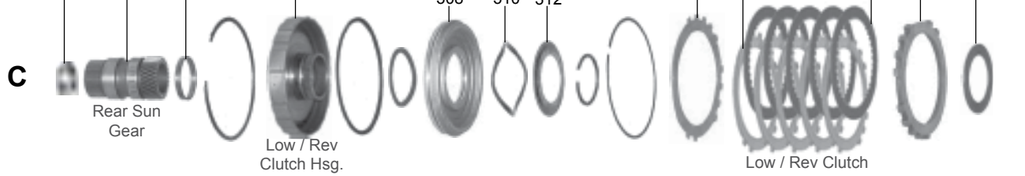
C
300
302
304
306
308
310
312
314
316
318
320
322
Rear Sun Gear
Low / Rev Clutch Hsg.
Low / Rev Clutch

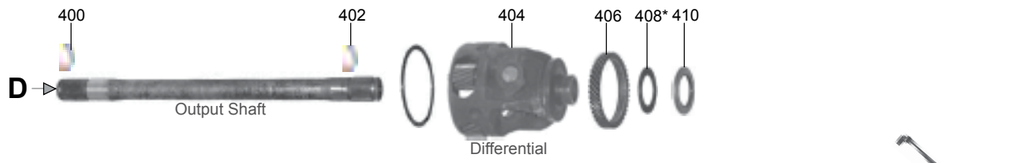
D
400
402
404
406
408*
410
Output Shaft
Differential


E
500
502
504
Park Pawl

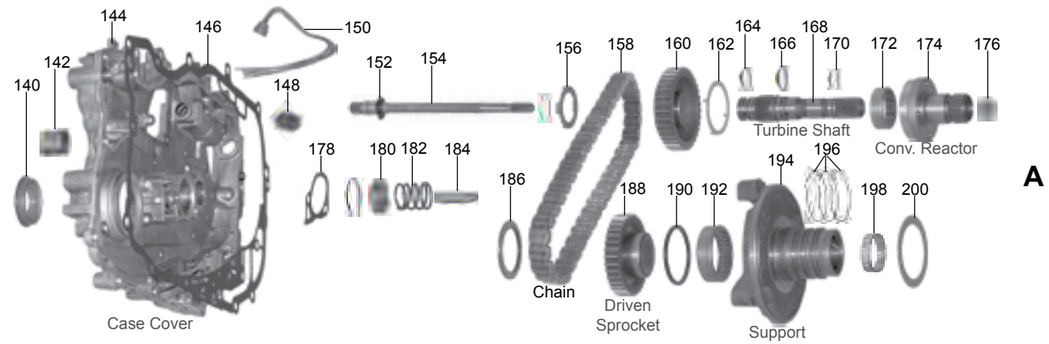
A
144
146
150
142
140
148
152
154
156
158
160
162
164
166
168
170
172
174
176
178
180
182
184
186
188
190
192
194
196
198
200
Turbine Shaft
Conv. Reactor
Case Cover
Chain
Driven Sprocket
Support

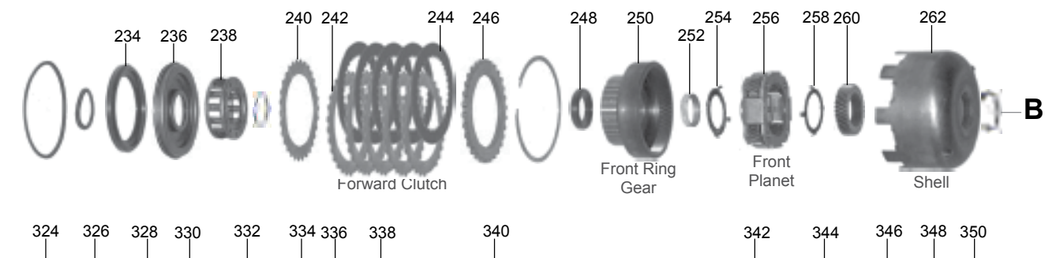
B
234
236
238
240
242
244
246
248
250
252
254
256
258
260
262
Forward Clutch
Front Ring Gear
Front Planet
Shell

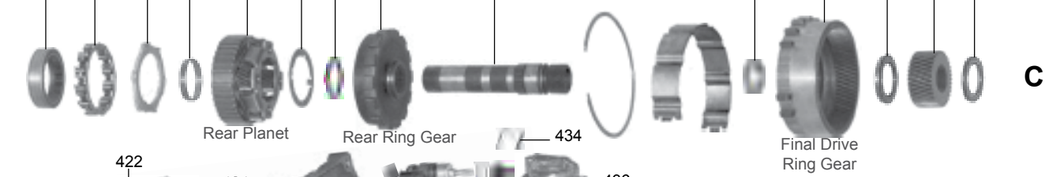
C
324
326
328
330
332
334
336
338
340
342
344
346
348
350
Rear Planet
Rear Ring Gear
434
Final Drive Ring Gear

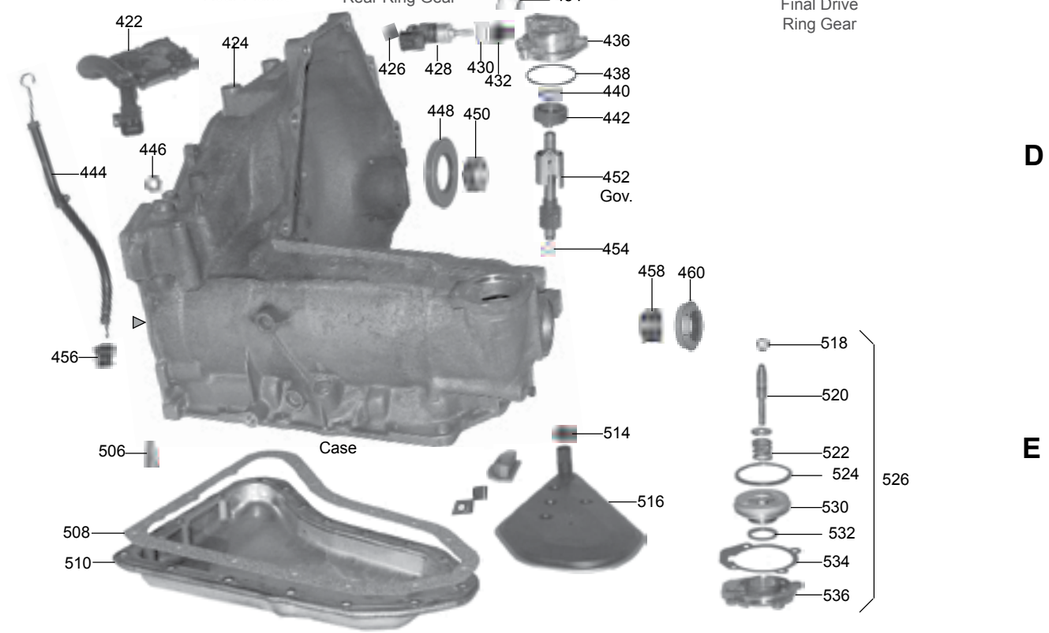
D
422
424
426
428
430
432
436
438
440
442
448
450
446
444
452
Gov.
454
458
460
456
Case
E
514
506
516
508
510
518
520
522
524
526
530
532
534
536

ILL.		Qty.	Year	Part #	Ref. #
DELUXE KITS (SUPER KITS WITH STEELS)					
N.I.	125, 125C (with .080 Forward/Direct Frictions)	1	80-E84	64008	N.L.
N.I.	125C (with .070 Forward/Direct Frictions)	1	L84-01	64008B	N.L.
MASTER OVERHAUL KITS (WITH STEELS)					
N.I.	125, 125C (with .080 Forward/Direct Frictions)	1	80-E84	64006	N.L.
N.I.	125C (with .070 Forward/Direct Frictions)	1	L84-01	64006B	N.L.
MASTER OVERHAUL KITS (LESS STEELS)					
N.I.	125, 125C (with .080 Forward/Direct Frictions)	1	80-E84	64004	N.L.
N.I.	125C (with .070 Forward/Direct Frictions)	1	L84-01	64004B	N.L.
OVERHAUL KITS (WITH RINGS AND SEALS)					
N.I.	125, 125C	1	80-01	64002C	N.L.
GASKETS & O-RINGS					
102A	Gasket, Side Pan (Valve Body Cover)	1	80-01	64301	8643573
124A	Gasket, Valve Body (Upper & Lower)	2	80-01	64320	8652506
146A	Gasket, Case Cover to Case (Large Outer)	1	80-01	64324	8631756
170A	O-Ring, Turbine Shaft O-Ring	1	80-01	64380	8636033
178A	Gasket, Case Cover to Case (Small Center)	1	80-01	64308	8660775
456D	Boot, Filler Tube	1	80-01	44371B	E2FZ-7N243A
502E	Boot, Detent Cable	1	80-01	54373B	1262476
508E	Gasket, Bottom Pan	1	80-01	64300	8643572
514E	Filter Seal (Late)	1	80-01	64379	8652898
534E	Gasket, Intermediate Servo Cover	1	80-01	64307	8631698
N.I.	O-Ring, Case Connector	1	80-01	44369B	6264903
N.I.	Seal/Cup Plug, Low/Reverse Clutch Housing	1	80-01	54386A	E6DZ-7G085A
METAL CLAD SEALS					
448D	Front	1	80-01	84070	24204772
460D	Axle (Left and Right)	2	80-01	84076	24202835
SEALING RINGS & KITS					
N.I.	Sealing Ring Kit (Metal)	1	80-01	64175	N.L.
N.I.	Sealing Ring Kit (Teflon)	1	80-01	64175T	N.L.
FRICTION PLATES					
224B	Forward & Direct (.080")	8	80-E84	64106	8652409
224B	Forward & Direct (.070")	8-10	L84-01	64106A	8643741
318C	Low & Reverse (.080")	5	80-E84	64114	8631080
318C	Low & Reverse (.090")	5	L84-01	64114A	8666661
STEEL PLATES					
222B	Direct (.090")	4	80-01	64126	8631026
240B	Forward (Waved)	1-2	80-01	64129	8652126
242B	Forward (Flat)	3-4	80-01	64128	8631379
314C	Low & Reverse (.078") (Waved)	1-2	82-01	64135A	8652647
316C	Low & Reverse (.080")	5	80-E84	64134	8631079
316C	Low & Reverse (.088")	4	L84-01	64134A	8652027
FILTERS					
516E	Main Filter	1	80-01	64010	8666665
FILTER KITS					
N.I.	Filter Kit, 125, 125C	1	80-01	64011	64011
BANDS					
210B	Flex (Narrow)	1	80-81	64022	8631030
210B	Flex (Wide)	1	82-93	64022A	8665223
210B	Flex (Wide) (Hi-Energy)	1	94-01	64022B	8685538
BUSHINGS					
N.I.	Bushing Kit	1	80-01	64030	N.L.
176A	Converter Hub (125)	1	80-81	64032	8631907
176A	Converter Hub (125C)	1	82-01	64032B	8637905
212B	Direct Drum (Front)	1	80-01	64046B	8631902

ILL.		Qty.	Year	Part #	Ref. #
BUSHINGS (Cont.)					
216B	Direct Drum (Rear)	1	80-01	64046	8631901
228B	Input Shaft	1	80-01	64047	8631903
252B	Input Gear (Front Ring Gear)	1	80-01	64050	8631904
342C	Final Drive Gear & Case	2	80-01	64060	8631119
N.I.	Stator Support Front	1	80-01	54036A	8628915
THRUST WASHERS/BEARINGS					
WASHERS					
N.I.	Washer Kit (No Bearings or Selective Washers)	1	80-01	64200	8665957
156A	Drive Sprocket to Cover	1	80-01	64278	8652868
162A	Drive Sprocket to Support (86-01)	1	86-01	64279A	8652841
190A	Driven Sprocket Rear (82-01)	1	82-01	64281A	8637227
200A	Direct Drum to Support	1	80-01	64226	8631029
248B	Forward Drum to Hub 1.220" ID (Plastic)	1	80-87	64232	8631747
248B	Forward Drum to Hub 1.270" ID (Brass)	1	87-01	64232A	8664762
254B	Front Planet to Hub	1	80-01	64235	8631063
258B	Front Planet to Sun Gear	1	80-01	64238	8631062
328C	Sprag to Rear Planet	1	80-01	64244	8631227
334C	Rear Planet to Rear Ring Gear	1	80-01	54251A	8628188
440D	Governor to Cover	1	80-01	64265	8631766
BEARINGS					
N.I.	Bearing Kit	1	80-01	64201A	N.L.
122A	Pump Shaft without Seal	1	80-E84	64209	8631277
122A	Pump Shaft with Seal	1	L84-01	64209A	8666375
172A	Inside Converter Reactor (Caged Bearing)	1	80-01	64295	8631186
186A	Case Cover to Driven Sprocket	1	80-01	44211C	9436851
336C	Rear Sun Gear & Final Drive Sun Gear (Rear)	2	80-01	54247A	8628962
346C	Final Drive Sun Gear (Front)	1	80-01	64254	8631116
410D	Differential to Case	1	80-01	64292	8631362
N.I.	Axle Stabilizer, Left and Right Bearing Type (OEM)	1	80-01	T64275	N.L.
ELECTRICAL COMPONENTS					
130A	Switch, GM Non Grounding Governor Lock-Up Delay	1	80-01	44416G	N.L.
132A	Switch, 3rd Clutch Pressure (1 Prong) 4.3L	1	82-01	54411B	8683502
132A	Switch, 3rd Clutch Pressure (1 Button Prong)	1	89-01	64412B	8665355
134A	Solenoid, Torque Converter Clutch (Universal)	1	80-01	84425	8633945
134A	Solenoid, Torque Converter Clutch (2 Wire)	1	80-01	64425B	8689901
134A	Solenoid, Torque Converter Clutch (4 Wire)	1	80-01	64425D	8689902
148A	Connector, Case (2 Prong)	1	80-01	74444	12300205
148A	Connector, Case (3 Prong)	1	80-01	74444A	8634383
148A	Connector, Case (4 Prong Square)	1	80-01	84444	8662395
150A	Wire Harness, External (4 Wire)	1	80-01	64445	24202567
N.I.	Switch, 3rd Clutch Pressure (2 Button)	1	82-01	64412	8643710
N.I.	Switch, 2nd Clutch Pressure (3 Prong)	1	87-01	64411A	8664388
VALVE BODY RECALIBRATION KITS					
N.I.	Shift Kit, 125/125C, Corrects/ Prevents 3-2 Clunk (Transgo)	1	80-01	T64165	SK® 125
N.I.	Valve Body Kit, Superior	1	80-01	S64165	K125
PUMP COMPONENTS					
113A	Rotor Kit, 15 Spline Rotor (.708" Thick)	1	80-01	64531B	N.L.
114A	Ring, Pump Rotor to Vanes	2	80-01	64538	8631279
116A	Vane	7	80-01	64533	8631280
116A	Vane Kit (Package of 7)	1	80-01	74533K-1	8634904
118A	Rotor, 15 Spline (.708" Thick)	1	80-01	64532A	8652247
122A	Bearing with Seal, Pump Shaft	1	L84-01	64209A	8666375
174A	Converter Reactor (Stator Support)	1	80-81	64529	8637415
174A	Converter Reactor (Stator Support)	1	82-01	64529A	8662523
DRUMS & COMPONENTS					
214B	Drum, Direct (2.250" Band Surface)	1	85-01	64555B	8653971
232B	Drum, Forward (Uses 1.270" ID Washer # 232)	1	87-01	64554C	9664982
232B	Drum, Forward (Uses 1.220" ID Washer # 232)	1	85-86	64554B	N.L.

ILL.		Qty.	Year	Part #	Ref. #
PLANETS & COMPONENTS					
250B	Ring Gear, Input Internal (Front)	1	80-01	64592	8631049
256B	Planet, Front (Input)	1	80-01	64582	8686142
332C	Planet, Rear (Reaction)	1	80-01	64584	8683633
338C	Ring Gear, Reaction Internal (Rear)	1	80-01	64594	8652236
344C	Ring Gear, Final Drive (Early Pawl with 70T)	1	83-89	84598	8668720
344C	Ring Gear, Final Drive (Late Pawl with 70T)	1	90-01	84598B	8675330
SUN GEARS					
260B	Input (Front Planet)	1	80-01	64612	8652644
302C	Reaction (Rear Planet)	1	80-01	64614	8652388
348C	Final Drive 30 Teeth	1	80-01	84618B	8644237
348C	Final Drive 34 Teeth	1	80-01	84618A	24209184
348C	Final Drive 38 Teeth	1	80-01	84618	8658040
ONE WAY CLUTCHES					
326C	Sprag, Low Roller Clutch	1	80-01	64652	8652403
VALVE BODIES & GOVERNORS					
123A	Valve Body with Pump (3 Prong 2nd Switch Type)	1	92-01	64740-1	N.L.
123A	Valve Body with Pump (Non 3 Prong 2nd Switch Type)	1	92-01	64740-2	N.L.
DIFFERENTIALS					
404D	30T Sun Gear, 20T Pinion, 3.33 Ratio	1	80-01	64715D	N.L.
404D	34T Sun Gear, 18T Pinion, 3.06 Ratio	1	80-01	64715C	N.L.
404D	38T Sun Gear, 16T Pinion, 2.84 Ratio	1	80-01	64715	N.L.
MISCELLANEOUS COMPONENTS					
138A	Valve, Pressure Regulator	1	80-01	74507B	8684048
144A	Sleeve, Channel Plate Sleeve	1	80-01	64755S	N.L.
154A	Shaft, Pump (15 Spline) (with Thin Steel Race on Shaft)	1	L84-01	64671C	8652125
158A	Chain, .750" Wide, 42 Links	1	80-83	64700	8643337
158A	Chain, .875" Wide, 42 Links	1	84-01	84700A	8660099
310C	Return Spring, Low and Reverse Clutch (Waved)	1	80-01	54977A	8628222
310C	Return Spring, Low and Reverse Clutch (Diaphragm) (1993 Update)	1	80-01	64977	8683616
408D	Spacer, Differential to Case 2.05mm (#6)	1	80-01	64293	8631426
408D	Spacer, Differential to Case 2.15mm (#7)	1	80-01	64293G	8631427
408D	Spacer, Differential to Case 2.25mm (#8)	1	80-01	64293H	8631428
408D	Spacer, Differential to Case 2.35mm (#9)	1	80-01	64293J	8631429
408D	Spacer, Differential to Case 1.95mm (#5)	1	80-01	64293E	8631425
522E	Spring, Intermediate Servo Cushion	1	80-01	64906	8652057
N.I.	Chain Snubber	1	80-01	64701	N.L.
SERVOS & ACCUMULATORS					
138A	Valve, 3rd Accumulator Check Valve & Spring (Updated)	1	80-01	64952K	8643964
138A	Valve, 2-3 Shift (Accumulator)	1	80-01	64741S-1	8643964
180A	Piston, 1-2 Accumulator	1	80-01	64927	8665920
180A	Piston, 1-2 Accumulator (with Pin)	1	80-01	64927K	75921-01K
182A	Spring, 1-2 Accumulator (Purple)	1	80-E85	64926	8631168
182A	Spring, 1-2 Accumulator (Purple) Has Thicker Coils Than 64926	1	L85-01	64926A	8652501
184A	Pin, 1-2 Accumulator	1	80-01	64928	8665840
TECHNICAL MANUALS					
N.I.	Technical Manual	1	80-01	64400	83-125TM
N.I.	Technical Manual, 125C Update / Supplement	1	87-01	64400H	83-125TM-U1

Notes

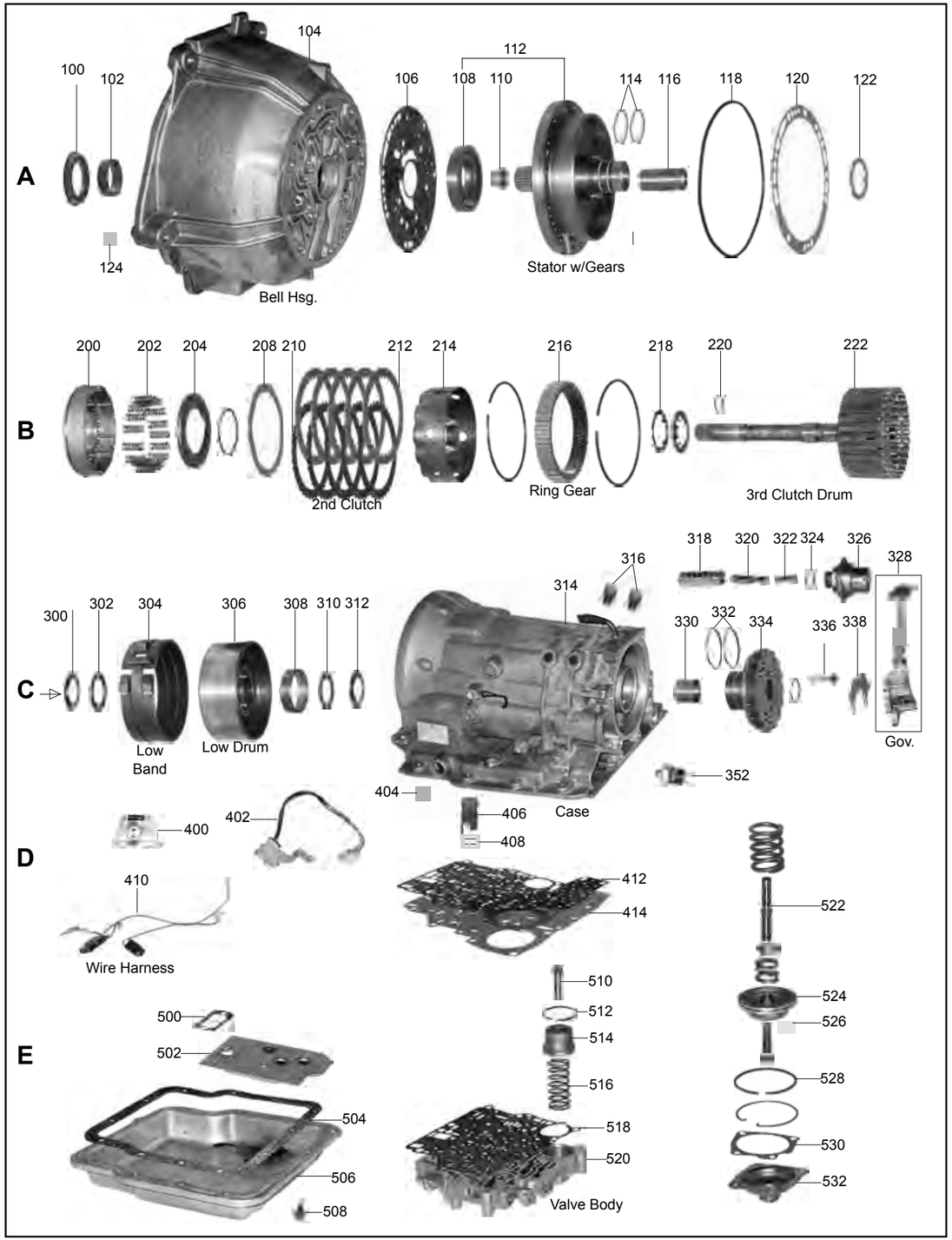
A
100
102
104
106
108
110
112
114
116
118
120
122
124
Bell Hsg.
Stator w/Gears
B
200
202
204
208
210
212
214
216
218
220
222
2nd Clutch
Ring Gear
3rd Clutch Drum
C
300
302
304
306
308
310
312
314
316
318
320
322
324
326
328
330
332
334
336
338
Low Band
Low Drum
Case
Gov.
352
D
400
402
404
406
408
410
412
414
Wire Harness
522
524
526
528
530
532
E
500
502
504
506
508
510
512
514
516
518
520
Valve Body

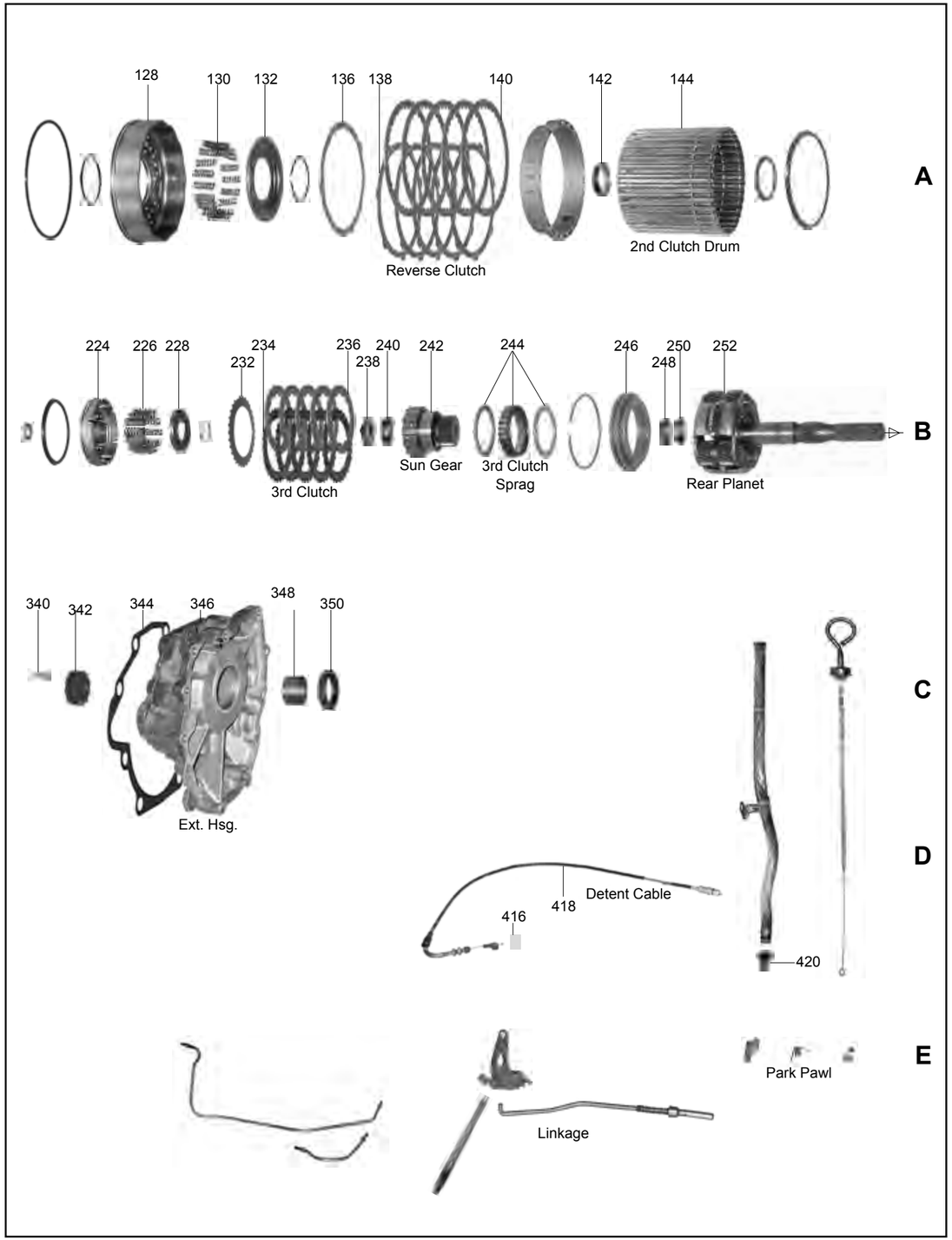
A
128
130
132
136
138
140
142
144
Reverse Clutch
2nd Clutch Drum
B
224
226
228
232
234
236
238
240
242
244
246
248
250
252
3rd Clutch
Sun Gear
3rd Clutch Sprag
Rear Planet
C
340
342
344
346
348
350
Ext. Hsg.
D
416
418
Detent Cable
420
E
Linkage
Park Pawl

ILL.		Qty.	Year	Part #	Ref. #
MASTER OVERHAUL KITS (WITH STEELS)					
N.I.	180,180C	1	69-Up	24006	N.L.
MASTER OVERHAUL KITS (LESS STEELS)					
N.I.	180,180C	1	69-Up	24004	N.L.
OVERHAUL KITS (WITH RINGS AND SEALS)					
N.I.	180,180C	1	69-Up	24002	N.L.
GASKETS & O-RINGS					
118A	O-Ring, Pump	1	69-Up	24311	96017189
120A	Gasket, Pump	1	69-Up	24310	5258939
344C	Gasket, Extension Housing	1	69-Up	24305	5258199
500E	Gasket, Filter	1	69-Up	24326	5258245
504E	Gasket, Pan	1	69-Up	24300	90064106
METAL CLAD SEALS					
100A	Front	1	69-Up	24070	8670283
350C	Rear (Some)	1	69-Up	44074	D5AZ-7052A
350C	Rear (Some) (Rubber Coated)	1	69-Up	24074B	N.L.
350C	Rear (Sidekick 2wd, Tracker 2wd)	1	92-Up	24074A	96040762
350C	Rear (Sidekick 4wd, Tracker 4wd)	1	92-Up	67076A	96054226
SEALING RINGS & KITS					
N.I.	Ring Kit (180, 180C Exc Holden)	1	69-Up	24175	N.L.
FRICTION PLATES					
140A	Reverse	2-4	69-Up	24110	5258017
212B	2nd Clutch	3-4	69-Up	24104	5258025
236B	3rd Clutch	2-4	69-Up	24106	5258035
STEEL PLATES					
138A	Reverse (.083")	5	69-Up	24130A	5258957
210B	2nd Clutch (.083")	5	69-Up	24124	5258956
234B	3rd Clutch (.083)	5	69-Up	24126	5258955
FILTERS					
502E	Filter	1	69-Up	24010	5258130
FILTER KITS					
N.I.	Filter Kit	1	69-Up	24011	N.L.
BANDS					
304C	Low	1	69-Up	24010	5258130
BUSHINGS					
N.I.	Bushing Kit (180,180C)	1	69-Up	24030	N.L.
102A	Pump (Narrow)	1	69-Up	24034A	8958661
102A	Pump (Wide)	1	69-Up	44034	29511860
110A	Stator Support Front	1	81-Up	54036A	8628915
116A	Stator Support Rear	1	69-Up	24036	8958621
116A	Stator Support Rear (Bronze)	1	69-Up	24036X	N.L.
142A	2nd Clutch Drum	1	69-Up	24046	5258128
330C	Case	1	69-Up	24064	5258191
348C	Extension Housing (Exc 89-98 Tracker)	1	69-Up	44066B	6260048
348C	Extension Housing (89-98 Tracker)	1	89-98	24066	N.L.
308C	Reaction Sun Gear	1	69-Up	24050	5258075
THRUST WASHERS/BEARINGS					
WASHERS					
N.I.	Pump Washer Kit	1	69-Up	24200B	N.L.
ELECTRICAL COMPONENTS					
400D	Solenoid, Torque Converter Clutch Lock-Up (180C)	1	82-Up	24425B	N.L.

ILL.		Qty.	Year	Part #	Ref. #
VALVE BODY RECALIBRATION KITS					
N.I.	Shift Kit (180C) (Transgo)	1	82-Up	T24165	SK® 180 C
DRUMS & COMPONENTS					
144A	2nd Clutch (All 79-Up)	1	79-Up	24552A	N.L.
PLANETS & COMPONENTS					
N.I.	Planet Package, 3 Gear (3L30) (LLV) (Replaces Coarse or Fine Pitch)	1	87-Up	24583	N.L.
SUN GEARS					
242B	Sun Gear, with Inner Race (25T) (180, 180C)	1	69-86	24612	N.L.
MISCELLANEOUS COMPONENTS					
244B	Sprag, 3rd Clutch (26 Elements)	1	69-Up	74658	8647084
326C	Modulator, Dual Green Stripe (Adjustable) (Post Office Vehicles)	1	69-Up	24160C	5258922
326C	Modulator, Dual Blue Stripe (Adjustable) (Chevrolet)	1	69-Up	24160E	96013028
326C	Modulator, Purple Stripe (Adjustable) (GEO Tracker, Suzuki)	1	89-Up	24160G	96013839
N.I.	Converter Housing To Front Pump Alignment Tool	1	69-81	T-1080	N.L.
N.I.	Converter Housing To Front Pump Alignment Tool (Pontiac)	1	82-Up	T-1080-A	N.L.
N.I.	Third Clutch Ring Compressor	1	79-Up	T-1085-A	N.L.
N.I.	Governor Bore Case Repair	1	69-Up	T-1195	N.L.
N.I.	Governor Bore Case Repair Sleeve	1	69-Up	T-1195-SL	N.L.
Notes					

FWD, RWD
3 SPEED

200, 200C, 2004R, 325, 325-4L

A

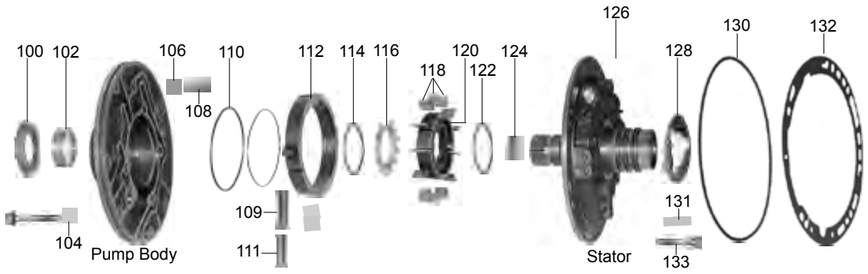

B

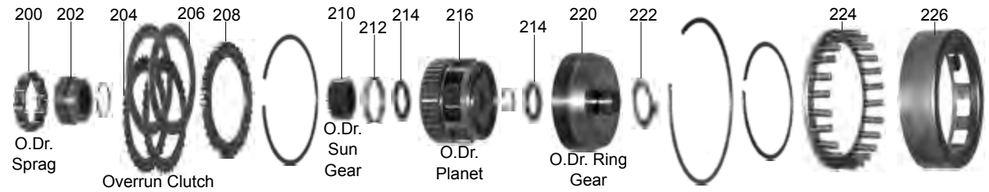

C

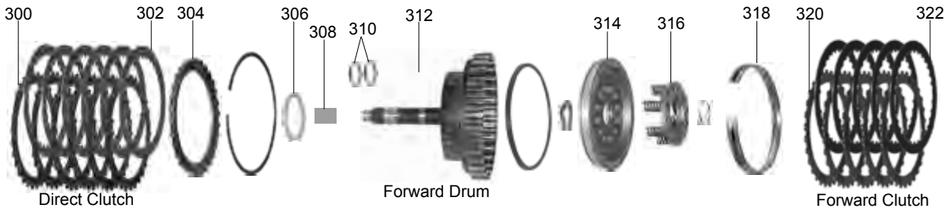

D

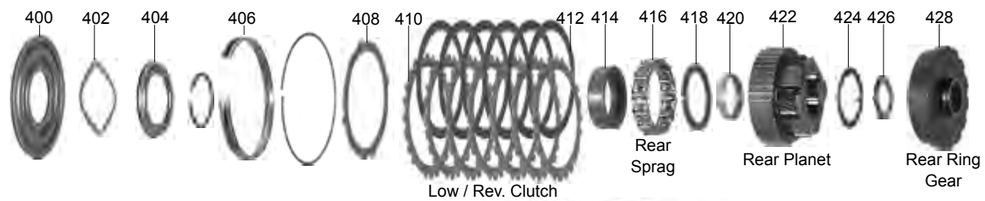

E

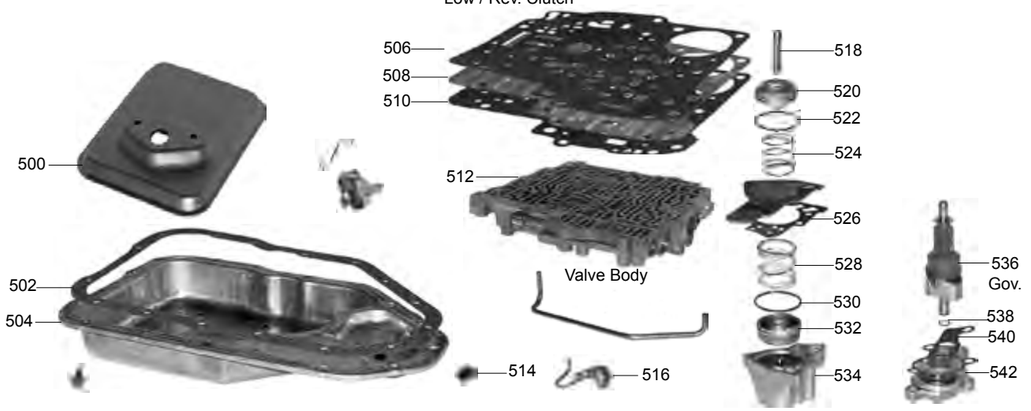

GM

A

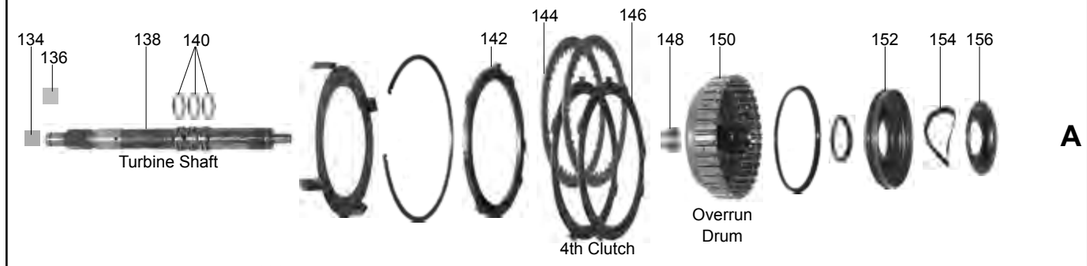

B

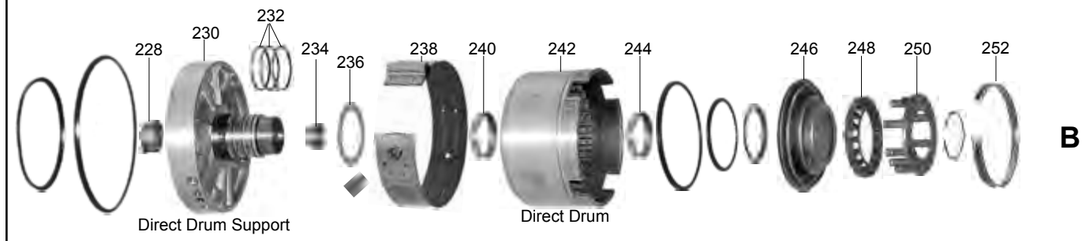

C

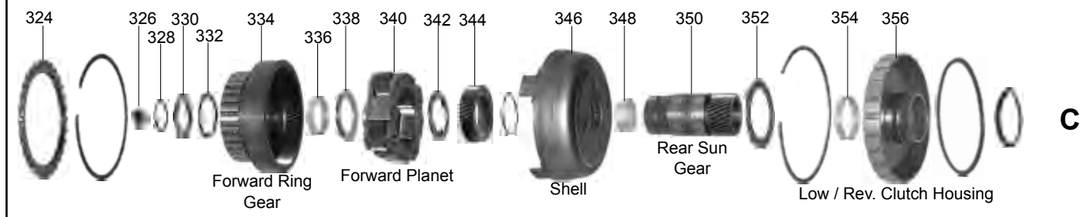

D



E

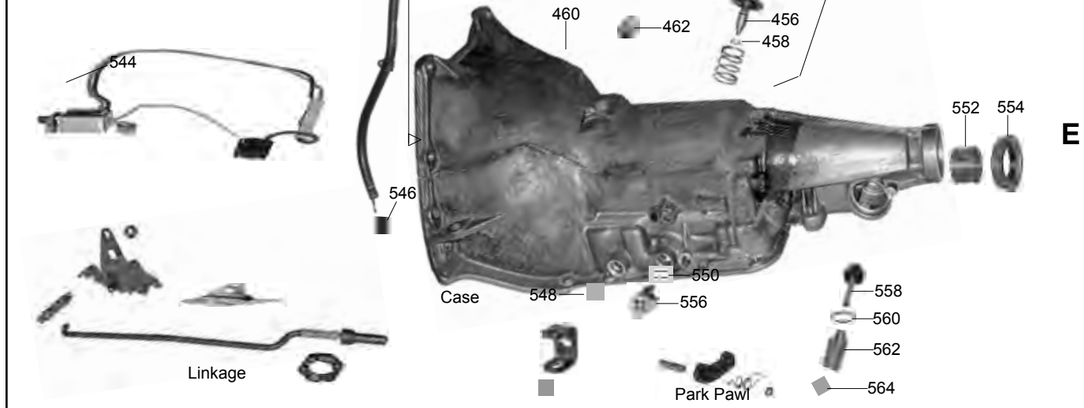

ILL.		Qty.	Year	Part #	Ref. #
DELUXE KITS (SUPER KITS WITH STEELS)					
N.I.	Deluxe Kit, 200-4R	1	81-90	54008B	N.L.
MASTER OVERHAUL KITS (WITH STEELS)					
N.I.	200, 200C	1	76-87	54006A	N.L.
N.I.	200-4R	1	81-90	54006B	N.L.
N.I.	325	1	79-81	54006C	N.L.
N.I.	325-4L	1	82-85	54006D	N.L.
MASTER OVERHAUL KITS (LESS STEELS)					
N.I.	200, 200C	1	76-87	54004A	N.L.
N.I.	200-4R	1	81-90	54004B	N.L.
N.I.	325	1	79-81	54004C	N.L.
N.I.	325-4L	1	82-85	54004D	N.L.
OVERHAUL KITS (WITH RINGS AND SEALS)					
N.I.	200, 200C	1	76-87	54002A	N.L.
N.I.	200-4R	1	81-90	54002B	N.L.
N.I.	325	1	79-81	54002C	N.L.
N.I.	325-4L	1	82-85	54002D	N.L.
GASKETS & O-RINGS					
104A	Gasket, Pump Bolt Washer	6	81-90	44309	MD707653
130A	O-Ring, Front Pump (200, 200C)	1	76-87	54311A	8628052
130A	O-Ring, Front Pump (200-4R)	1	81-90	54311B	8628052
130A	O-Ring, Front Pump (325, 325-4L)	1	79-85	54311G	8628052
132A	Gasket, Pump to Case (200C)	1	79-87	54310AB	8633899
132A	Gasket, Pump to Case (200-4R)	1	81-90	54310B	8634047
300C	Gasket, Pan (325, 325-4L)	1	79-85	54300C	8657387
502E	Gasket, Pan (200-4R)	1	81-90	54300B	8657387
502E	Gasket, Pan (200, 200C)	1	76-87	54300A	8648529
506E	Gasket, Upper Valve Body	1	81-90	54320B	8634653
506E	Gasket, Upper Valve Body (200C)	1	79-Up	54320AB	8634653
510E	Gasket, Lower Valve Body	1	81-90	54321B	8634654
510E	Gasket, Lower Valve Body (200C)	1	79-Up	54321AB	8634654
526E	Gasket, Accumulator Housing to Plate	1	81-90	54308B	8634166
540E	Gasket, Governor Cover	1	81-90	54306B	8634477
N.I.	Boot, Detent Cable	1	81-90	54373B	1262476
N.I.	Boot, Filler Boot	1	81-90	44371B	E2FZ-7N243A
N.I.	Lathe Cut Seal, 1-2 Accumulator	1	81-90	54352A	8635568
N.I.	Lip Seal Kit, Servo	1	81-90	54361AK	N.L.
N.I.	Seal/Cup Plug, Low and Reverse Clutch Housing	1	81-90	54386A	E6DZ-7G085A
METAL CLAD SEALS					
100A	Front (200, 200-4R, 325-4L)	1	76-90	74070	24202535
100A	Front (325)	1	79-81	44070	N.L.
548E	Linkage Shaft	1	76-90	44072	23010610
554E	Rear	1	76-90	44074	D5AZ-7052A
564E	Speedo Driven Gear Shaft	1	81-90	44078X	1240382
N.I.	Retainer (Front Seal Lock)	1	81-90	74089	8654491
SEALING RINGS & KITS					
N.I.	Ring Kit (Teflon)	1	76-87	54175AT	N.L.
N.I.	Ring Kit (Metal & Teflon)	1	81-90	54175K	N.L.
FRICTION PLATES					
144A	4th Clutch	2	81-90	541001B	8657170
144A	4th Clutch (High Performance)	2	81-90	R541006BHP	N.L.
206B	Overrun	2	81-90	54116B	8657031
206B	Overrun (High Performance)	2	81-90	R54116BHP	N.L.
302C	Forward & Direct	9-10	76-90	54106A	8657168
302C	Forward & Direct (High Performance)	9-10	76-90	R54106AHP	N.L.
412D	Low/ Reverse	4-6	76-90	54114A	8648351
412D	Low/ Reverse (High Performance)	4-6	76-90	A54114AHP	N.L.

ILL.		Qty.	Year	Part #	Ref. #
STEEL PLATES					
146A	4th Clutch	3	81-90	54120B	8634026
146A	4th Clutch (Kolene)	1	81-90	541206K	N.L.
204B	Overrun Clutch	2	81-90	54136B	8634050
300C	Direct (.090")	5-6	76-90	54126A	8628484
300C	Direct (.090") (Kolene)	1	76-90	54126AK	8678923
300C	Direct (.100") (Oversized)	AR	76-90	54126AX	8628484
320C	Forward (.077")	2-3	76-90	54126AA	8628086
320C	Forward (.077") (Kolene)	1	76-90	54126AAK	8628086
320C	Forward (.060") (Waved)	1	76-90	54126AB	8628085
320C	Forward (.060") (Waved) (Kolene)	1	76-90	54126C	N.L.
408D	Low/Reverse (Waved)	1	76-90	54135A	8633371
410D	Low/Reverse (.076")	6-7	76-90	54134A	8628224
410D	Low/Reverse (.076") (Kolene)	1	76-90	54134AK	N.L.
410D	Low/Reverse (.092") (Oversized)	AR	76-90	54134AX	N.L.
FILTERS					
131A	Screen, Pump Solenoid	1	81-90	54016B	8627509
500E	200, Brass (Shallow Pan)	1	76-E79	54010A	8666665
500E	200, Nylon (Deep Pan)	1	L79-87	54010AA	8630789
500E	200-4R	1	81-90	54010B	8657789
500E	325	1	79-81	54010C	N.L.
500E	325-4L	1	82-85	54010D	N.L.
FILTER KITS					
N.I.	200, Brass (Shallow Pan)	1	76-E79	54011A	N.L.
N.I.	200, Nylon (Deep Pan)	1	L79-87	54011AA	N.L.
N.I.	200-4R	1	81-90	54011B	N.L.
N.I.	325	1	79-81	54011C	N.L.
N.I.	325-4L	1	82-85	54011D	N.L.
BANDS					
238B	Intermediate Flex	1	76-90	54022A	8657210
238B	Intermediate Flex (High Performance)	1	76-90	54022AK	8657210
BUSHINGS					
N.I.	Bushing Kit (200, 200C)	1	76-87	54030A	N.L.
N.I.	Bushing Kit (200-4R)	1	81-90	54030B	N.L.
102A	Pump Body (200, 200C)	1	76-87	54034A	8628913
102A	Pump Body (200-4R)	1	81-90	74034	8628913
124A	Stator Support (Front)	1	76-90	54036A	8628915
148A	Overrun Drum	1	81-90	54039B	8634908
212B	Overdrive Planet Bushing	1	81-90	64044	8631905
228B	Center Support (Front)	1	81-90	54044C	8634907
234B	Center Support (Rear)	1	81-90	54044B	8634913
240B	Direct Drum (Front)	1	81-90	54046B	8634919
240B	Direct Drum (Front) 200, 200C	1	76-87	54046AA	8634919
244B	Direct Drum (Rear, Bronze)	1	76-90	54046A	8628917
308C	Forward Drum (Pilot)	1	81-90	54048B	3634925
336C	Front Ring Gear	1	76-90	54050A	8628925
348C	Rear Sun Gear	1	76-90	54052A	8628928
354C	Low/Reverse Clutch Housing	1	76-90	54044A	8628929
420D	Rear Planet	1	76-90	54058A	8628947
552E	Extension Housing (Babbitt)	1	81-90	44066	3717682
552E	Extension Housing (Bronze)	1	81-90	44066B	6260048
N.I.	Stator Support (Rear)	1	81-90	54037A	8628916
THRUST WASHERS/BEARINGS					
WASHERS					
N.I.	Washer Kit (w/o Selectives)	1	76-87	54200A	N.L.
N.I.	Washer Kit (w/o Selectives)	1	81-90	54200B	N.L.
128A	Stator (#3, .178") (Brown)	1	81-90	54211BB	8634122
128A	Stator (#4, .184") (Grey)	1	81-90	54211BC	8634123
128A	Stator (#5, .188") (Yellow)	1	81-90	54211BD	8634124
128A	Stator (#6, .193") (Light Blue)	1	81-90	54211BE	8634125
222B	Overdrive Ring Gear to Center Support	1	81-90	54223B	8634146

ILL.		Qty.	Year	Part #	Ref. #
WASHERS (Cont.)					
236B	Center Support to Direct Drum (200-4R)	1	81-90	54226B	8634157
236B	Center Support to Direct Drum (200, 200C)	1	76-87	54226A	N.L.
306C	Direct Drum to Forward Drum	1	81-90	54229A	8628091
326C	Forward Drum to Output Shaft (# 2 .073" Thick) Neutral	1	81-90	54268A	8639292
326C	Forward Drum to Output Shaft (# 4 .083" Thick) Green	1	81-90	54268C	8639294
326C	Forward Drum to Output Shaft (# 6 .093" Thick) Purple	1	81-90	54268E	8639296
326C	Forward Drum to Output Shaft (# 8 .103" Thick) Orange	1	81-90	54268G	8639298
326C	Forward Drum to Output Shaft (# 10 .113" Thick) Light Blue	1	81-90	54268J	8639300
326C	Forward Drum to Output Shaft (# 12 .123" Thick) Tan	1	81-90	54268L	8639302
326C	Forward Drum to Output Shaft (# 14 .133" Thick) Light Green	1	81-90	54268N	8639304
330C	Forward Drum to Hub (#4, .138") Blue	1	81-90	54232C	8630894
330C	Forward Drum to Hub (#5, .145") Red	1	81-90	54232D	8630895
330C	Forward Drum to Hub (#6, .152") Brown	1	81-90	54232E	8628166
330C	Forward Drum to Hub (#7, .159") Green	1	81-90	54232F	8630897
330C	Forward Drum to Hub (#8, .166") Black	1	81-90	54232G	8628168
332C	Forward Hub to Spacer	1	81-90	54233A	8628765
352C	Shell to Low/ Reverse Clutch Housing .060" (Plastic)	1	81-90	54244A	8628766
352C	Shell to Low/ Reverse Clutch Housing .080" (Plastic)	1	81-90	54244AA	8628766
352C	Shell to Low/ Reverse Clutch Housing (Metal)	1	81-90	54244AB	8628549
418D	Rear Planet to Sprag Race	1	81-90	54242A	8628182
424D	Rear Planet to Rear Ring Gear	1	81-90	54251A	8628188
N.I.	Driven Governor Gear to Case	1	81-90	54266A	8628584
BEARINGS					
N.I.	Bearing Kit	1	76-87	54201A	N.L.
N.I.	Bearing Kit	1	81-90	54201B	N.L.
ELECTRICAL COMPONENTS					
514E	Switch, 3rd Gear Pressure (Preset)	1	81-90	54411A	24200843
514E	Switch, High Gear Pressure 1 Prong (Normally Closed)	1	81-90	54411B	8683502
514E	Switch, Valve Body Oil Pressure Switch (2 Button)	1	81-90	64412	8643710
516E	Pressure Switch (4-3) Pulse Signal (2-Prong) w/ Tube	1	81-90	54416BA	8634463
544E	Solenoid, (TCC) (Universal) (200-4R)	1	81-90	54425B	10478100
544E	Solenoid (TCC) (Universal) (200C)	1	76-87	84425	8633945
544E	Solenoid (TCC) 2 Wire (1 Wire in Connector) (200C)	1	81-87	54425AB	8633946
544E	Solenoid (TCC) 2 Wire (2 Wires in Connector) (200C)	1	81-87	54425A	8633945
544E	Solenoid (TCC) 3 Wire (2 Wires in Connector) (200C)	1	83-87	T84425	N.L.
556E	Connector, Case (Universal 2, 3, 4 Prong)	1	76-90	84444U	8662395
556E	Connector, Case (3 Prong)	1	76-90	74444A	8634383
556E	Connector, Case (4 Prong)	1	76-90	84444	8662395
N.I.	Switch, GM Non Grounding Governor Lock-Up Delay	1	81-90	44416G	N.L.
N.I.	Vacuum Switch Kit (Superior)	1	81-90	74439A	N.L.
N.I.	Switch, GM Non Grounding Governor Lock-Up Delay	1	76-87	44416G	N.L.
VALVE BODY RECALIBRATION KITS					
N.I.	Shift Kit®, 200 (Transgo)	1	76-78	T54165A	SK® 200
N.I.	Shift Kit®, 200, 200C (Transgo)	1	79-87	T54165AA	SK® 279
N.I.	Valve Body Kit, 200, 200C (Superior)	1	79-87	S54165A	K-200C
N.I.	Shift Kit®, 200-4R (Transgo®)	1	81-90	T54165B	SK® 200 4R
N.I.	Valve Body Kit, 200-4R (Superior)	1	81-90	S54165B	K-200-4R
N.I.	Valve Body Kit, 200-4R High Performance (Superior)	1	81-90	S54171B	K200-4R-HP
N.I.	Reprogramming Kit™, Automatic: Crisp to Full Race (Transgo®)	1	81-90	T54171E	200/4R-HD2
N.I.	Pump Slide Spring, High RPM, Replaces 2 OEM Springs (Bag of 5) (Sonnax)	1	81-90	S74537	77722-01K
N.I.	Pump Ring Kit, NoYoYo Hardened Steel Rings & (STD) Springs (Transgo®)	1	81-90	T74165B	700-PK
N.I.	Pump Ring Kit, NoYoYo Hi-Perf *Engines over 5500 RPM (Transgo®)	1	82-90	174165HP	700-PKH
PUMPS					
N.I.	Pump, Lock-Up (200C)	1	79-87	54500AB	N.L.
N.I.	Pump (200-4R)	1	81-90	54500B	N.L.
PUMP COMPONENTS					
106A	Spring, Under Pivot Pin	1	81-90	54540B	8634098
108A	Pivot Pin, Pump Slide	1	81-90	54535B	8634097
109A	Spring Kit, Pump Slide Spring (Outer & Inner)	1	81-90	74536K	8639562-3
110A	Pump Slide to Body (Metal)	1	81-90	54176B	8634079
112A	Pump Slide (.7074")	1	81-90	54534B	24208304
114A	Ring, Pump Rotor to Vane (Steel)	2	81-90	54538BS	24201144

ILL.		Qty.	Year	Part #	Ref. #
PUMP COMPONENTS (Cont.)					
116A	Rotor Guide, 7 Vane	1	81-90	54539B	8654733
116A	Rotor Guide, 10 Vane	1	81-90	54539BA	12337830
118A	Vane Kit (10 Vanes)	1	81-90	74533K-1A	8631280
120A	Rotor, 10 Vane Type	1	81-90	54532BA	8654389
N.I.	Pressure Regulator Valve Kit (200, 200C)	1	76-87	54507PK	65912-01K
N.I.	Valve Kit, Lock-Up Valve (Non-Stick) (Self Cleaning) (200C Only)	1	79-87	54507A	200-LU
N.I.	Shaft, Stator Tube w/ Bushing	1	81-90	545296	659175
N.I.	Rotor Kit, 10 Vane (w/ Slide) (.7074")	1	81-90	74531AK	N.L.
N.I.	Pump Gears (.777") (200, 200C)	1	76-87	54530AB	N.L.
N.I.	Valve, Pressure Regulator	1	81-90	74507B	8684048
N.I.	Spring, Pressure Regulator Valve (Orange)	1	81-90	54507BP-3	8639002
N.I.	Spring, Pressure Regulator Valve (Green)	1	81-90	54507BP-3A	8639164
N.I.	Spring, Pressure Regulator	1	81-90	54507P-3	8634490
DRUMS & COMPONENTS					
150A	Overrun	1	81-90	54551B	8634107
242B	Direct	1	81-90	54555B	8677993
312C	Forward	1	81-90	54554B	8634926
PLANETS & COMPONENTS					
216B	Overdrive	1	81-90	54580B	8678912
220B	Ring Gear, Overdrive Planet	1	81-90	54590B	8634037
334C	Ring Gear, Front Planet	1	76-90	54592A	8678944
340C	Front	1	76-90	54582A	8677982
422D	Rear	1	76-90	54584A	24217358
428D	Ring Gear, Rear Planet	1	76-90	54594A	8678904
SUN GEARS					
210B	Sun Gear, Overdrive Planet	1	81-90	54610B	8689983
344C	Sun Gear, Front Planet	1	76-90	54612A	8678903
350C	Sun Gear, Rear Planet	1	76-90	54614A	8628206
ONE WAY CLUTCHES					
200B	Roller, Overdrive	1	81-90	54650B	8634049
416D	Roller, Low Clutch	1	76-90	54654A	4431432
SHELLS & SUPPORTS					
230B	Center Support (4th Clutch)	1	81-90	54630B	8677987
346C	Shell, Input Drum (Hardened)	1	76-90	54622AH	8648484
356C	Low/Reverse Clutch Housing (Center Support)	1	76-90	54632A	8678906
VALVE BODIES & GOVERNORS					
512E	Valve Body (Exc Grand National)	1	81-90	54740-1	N.L.
536E	Governor (12T Speed-O-Gear)	1	81-90	54680BA	8655963
536E	Governor (13T Speed-O-Gear) (Buick/Olds w/ 301)	1	81-90	54680B	8655962
N.I.	Gear Kit, Governor (10 Tooth Speedo) Green	1	81-90	54684BC	8639906
N.I.	Gear Kit, Governor (12 Tooth Speedo) Red	1	81-90	54684B	8634935
N.I.	Gear Kit, Governor (13 Tooth Speedo) White	1	81-90	54684BB	8634934
MISCELLANEOUS COMPONENTS					
134A	Ball & Capsule, Input Shaft	1	81-90	54480A	8633748
402D	Return Spring, Low/ Reverse Clutch	1	81-90	54977A	8628222
SERVOS & ACCUMULATORS					
444D	Super Servo	1	81-90	54907BS	N.L.
532E	Piston, 1-2 Accumulator	1	81-90	54927B	8634923
N.I.	Pin, 3-4 Accumulator	1	81-90	74938	8628273
N.I.	Pin, 1-2 & 3-4 Accumulator (Oversized) (4 Per Kit)	1	81-90	74938X	77999
N.I.	Spring, 1-2 Accumulator (Plain, No Color)	1	81-90	54926A	8634391
N.I.	Spring, 1-2 Accumulator (White)	1	81-90	54926B	8657012
N.I.	Pin, Servo Extend() Pin (Teckpak)	1	81-90	T54908A	N.L.
N.I.	Pin, Servo (1 Wide Band)	1	81-90	54908AD	8632973
N.I.	Piston, 3-4 Accumulator	1	81-90	74927	8633567
TECHNICAL MANUALS					
N.I.	200C	1	76-87	54400A	83-200TM
N.I.	200-4R	1	81-90	54400B	83-204RTM

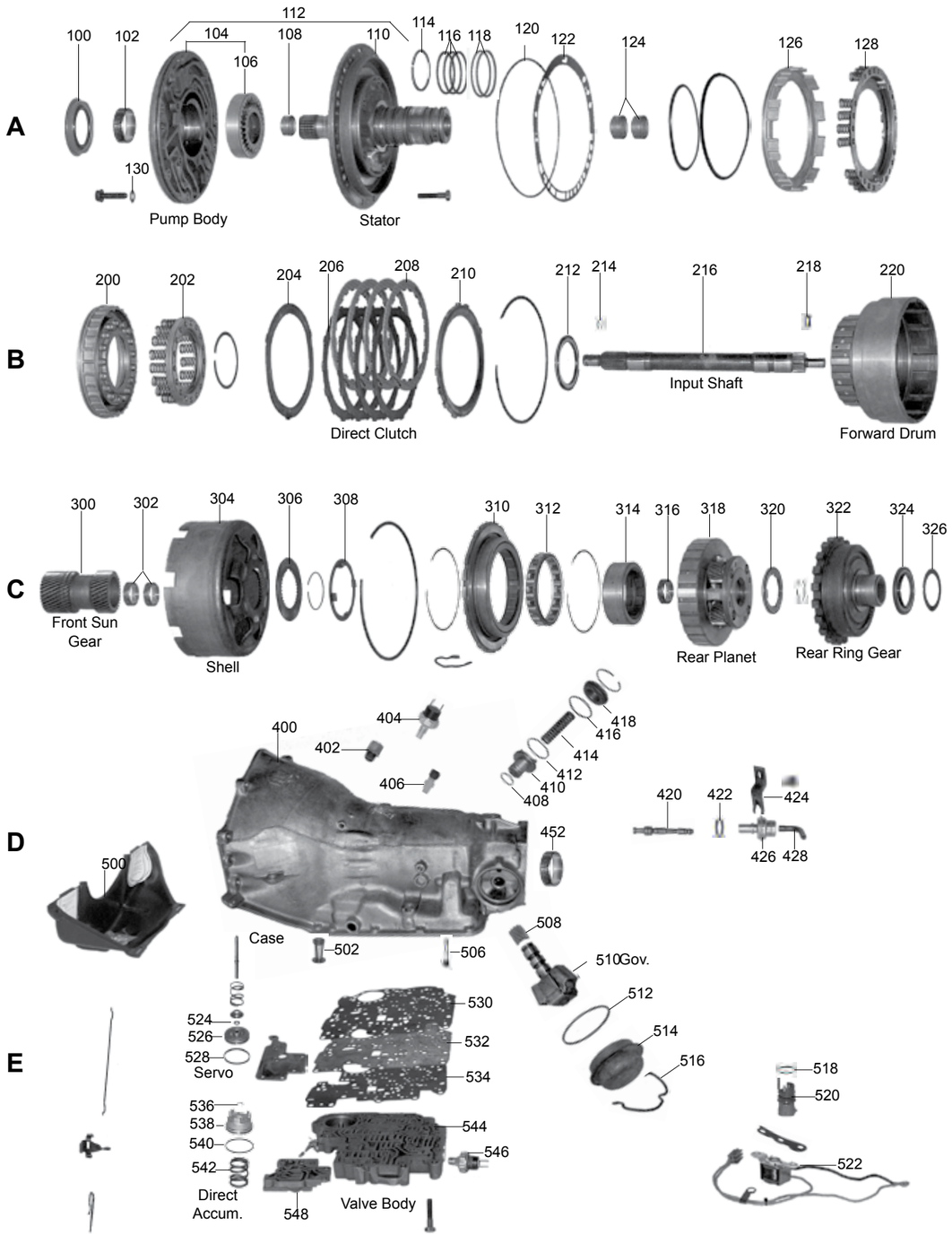
A
100
102
104
106
108
110
112
114
116
118
120
122
124
126
128
130
Pump Body
Stator
B
200
202
204
206
208
210
212
214
216
218
220
Input Shaft
Direct Clutch
Forward Drum
C
300
302
304
306
308
310
312
314
316
318
320
322
324
326
Front Sun Gear
Shell
Rear Planet
Rear Ring Gear
D
400
402
404
406
408
410
412
414
416
418
420
422
424
426
428
452
500
Case
502
506
508
510Gov.
512
514
516
518
520
522
E
524
526
528
Servo
530
532
534
536
538
540
542
Direct Accum.
544
546
548
Valve Body

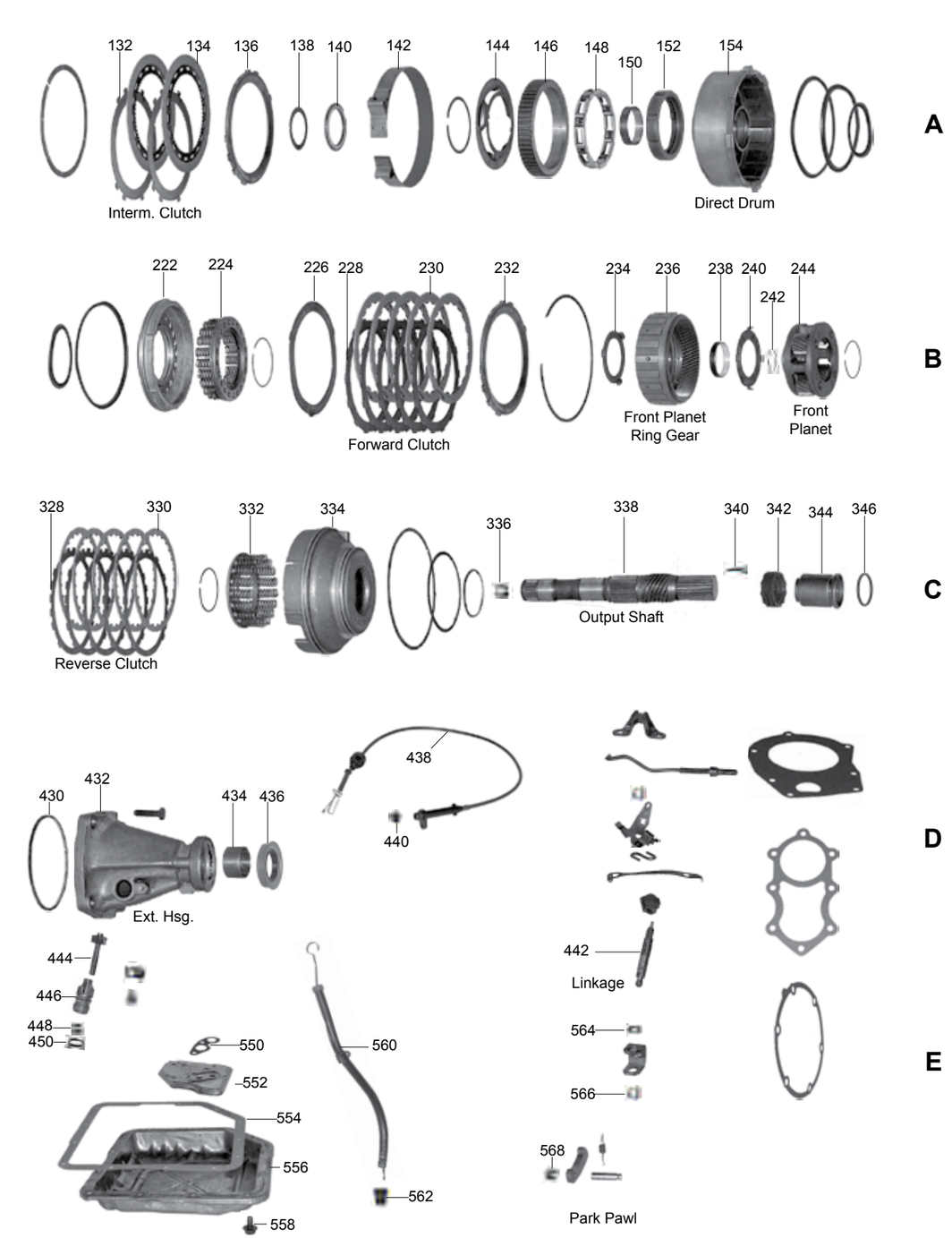
A
132
134
136
138
140
142
144
146
148
150
152
154
Interm. Clutch
Direct Drum
B
222
224
226
228
230
232
234
236
238
240
242
244
Forward Clutch
Front Planet Ring Gear
Front Planet
C
328
330
332
334
336
338
340
342
344
346
Reverse Clutch
Output Shaft
D
430
432
434
436
438
440
Ext. Hsg.
E
442
Linkage
444
446
448
450
550
552
554
556
558
560
562
564
566
568
Park Pawl

ILL.		Qty.	Year	Part #	Ref. #
DELUXE KITS (SUPER KITS WITH STEELS)					
N.I.	250, 350 (Complete Ring Kit)	1	69-79	44008A	N.L.
N.I.	250, 350, 350C (Complete Ring Kit)	1	69-86	44008D	N.L.
N.I.	350C (Complete Ring Kit)	1	80-86	44008C	N.L.
MASTER OVERHAUL KITS (WITH STEELS)					
N.I.	250, 350 (Complete Ring Kit)	1	69-79	44006A	N.L.
N.I.	250, 350, 350C (Complete Ring Kit)	1	69-86	44006D	N.L.
N.I.	250C (Complete Ring Kit)	1	80-86	44006H	N.L.
N.I.	350C (Complete Ring Kit)	1	80-86	44006C	N.L.
N.I.	250, 350 (Short Ring Kit)	1	69-79	44006	N.L.
N.I.	350C (Short Ring Kit)	1	80-86	44006B	N.L.
MASTER OVERHAUL KITS (LESS STEELS)					
N.I.	250, 350 (Complete Ring Kit)	1	69-79	44004A	N.L.
N.I.	250, 350, 350C (Complete Ring Kit)	1	69-86	44004D	N.L.
N.I.	250C (Complete Ring Kit)	1	80-86	44004H	N.L.
N.I.	350C (Complete Ring Kit)	1	80-86	44004C	N.L.
N.I.	250, 350 (Short Ring Kit)	1	69-79	44004	N.L.
N.I.	350C (Short Ring Kit)	1	80-86	44004B	N.L.
OVERHAUL KITS (WITH RINGS AND SEALS)					
N.I.	250, 250C, 350, 350C (Complete Ring Kit)	1	69-86	44002D	N.L.
N.I.	250, 350 (Complete Ring Kit)	1	69-79	44002A	N.L.
N.I.	250C, 350C (Complete Ring Kit)	1	80-86	44002C	N.L.
N.I.	250, 350 (Short Ring Kit)	1	69-79	44002	N.L.
N.I.	250C, 350C (Short Ring Kit)	1	80-86	44002B	N.L.
GASKETS & O-RINGS					
120A	O-Ring, Front Pump	1	69-86	44311	23016559
122A	Gasket, Pump	1	69-86	44310	8640671
130A	Gasket, Pump Bolt Washer	8	69-86	44309	MD707653
214B	O-Ring, Input Shaft (350C)	1	69-86	44380	1672358
346C	O-Ring, Output Shaft Sleeve to Slip-Yoke	1	69-86	44374B	3764601
416D	O-Ring, Intermediate Accumulator Steel Cover	1	69-86	44362	338926
416D	O-Ring, Intermediate Accumulator Aluminum Cover	1	69-86	44362A	1242559
422D	O-Ring, Modulator	1	69-86	44369B	6264903
422D	O-Ring, Electrical Connector	1	80-86	44369B	6264903
422D	O-Ring, Speed-O Housing .750" OD	1	69-86	44369B	6264903
430D	O-Ring, Extension Housing	1	69-86	44348	1358899
440D	O-Ring, Detent Cable	1	69-86	44373A	6264901
440D	Boot, Detent Cable Seal	1	69-86	44373B	1262475
450D	O-Ring, Speed-O Housing 2.000" OD (Purple)	1	69-86	44369A	6264904
512E	O-Ring, Governor Cover	1	69-86	44345	1241734
530E	Gasket, Upper Valve Body (Non Lock-Up)	1	69-79	44320	330189
530E	Gasket, Upper Valve Body (Lock-Up)	1	80-86	44320A	8641470
534E	Gasket, Lower Valve Body (Non Lock-Up)	1	69-79	44321	330190
534E	Gasket, Lower Valve Body (Lock-Up)	1	80-86	44321A	8641421
550E	Gasket, Filter	1	69-86	44326	6261235
554E	Gasket, Pan	1	69-86	44300	6261649
562E	O-Ring, Filler Tube	1	69-86	44371A	6030608
562E	Boot, Filler Tube	1	69-86	44371B	E2FZ-7N243A
N.I.	External Seal Kit (Cork)	1	69-86	44390	N.L.
METAL CLAD SEALS					
100A	Front	1	69-86	44070	8641300
436D	Rear (with Flange) (without Boot)	1	69-86	44074	D5AZ-7052A
448D	Speed-O Shaft (Metal Clad)	1	69-86	44078	3869910
448D	Speed-O Shaft (Rubber, w/ Spring)	1	69-86	44078A	1240382
448D	Speed-O Shaft (Rubber, w/o Spring)	1	69-86	44078X	1240382
564E	Linkage Shaft	1	69-86	44072	23010610
SEALING RINGS & KITS					
N.I.	Ring Kit (Short) (5 Pump Rings Only)	1	69-86	44175	N.L.
N.I.	Ring Kit (Complete)	1	69-86	44175A	N.L.
116A	Pump Stator (Direct Clutch)	3	69-86	44179	6261746
118A	Pump Stator (Forward Clutch)	2	69-86	44181	6261570

ILL.		Qty.	Year	Part #	Ref. #
SEALING RINGS & KITS (Cont.)					
408D	Intermediate Accumulator Piston (Inner)	1	69-86	44191	6261138
412D	Intermediate Accumulator Piston (Outer)	1	74-86	44192A	6260258
FRICTION PLATES					
134A	Intermediate	2-3	69-86	44104	8647522
134A	Intermediate (High Performance)	2-3	69-86	R44104HP	N.L.
208B	Forward & Direct (Exc 250C)	6-9	69-86	44106	8647577
208B	Forward & Direct (250C Only)	6-10	80-86	44106B	8647576
230B	Forward & Direct (High Performance)	6-9	69-86	R44106HP	N.L.
330C	Low/ Reverse (Exc 250C)	4-5	69-86	44114	8641512
330C	Low/ Reverse (High Performance)	4-5	69-86	R44114HP	N.L.
330C	Low/ Reverse (250C Only)	4-5	80-86	74114	8684089
STEEL PLATES					
132A	Intermediate (.068")	2-3	69-86	44124	6261450
132A	Intermediate (.068") (Kolene)	2-3	69-86	44124K	8640672K
132A	Intermediate (.078") (Oversized)	AR	69-86	44124AX	N.L.
132A	Intermediate (.089") (Oversized)	AR	69-86	44124X	8640672-OS
206B	Forward & Direct (.068")	6-9	69-86	44126	6261071
206B	Forward & Direct (.088") (Oversized)	AR	69-86	44126X	6261071-OS
228B	Forward & Direct (.068") (Kolene)	6-9	69-86	44126K	6261071K
328C	Low/ Reverse (.068")	4-5	69-86	44134	6261120
328C	Low/ Reverse (.068") (Kolene)	4-5	69-86	44134K	6261120K
328C	Low/ Reverse (.080") (Oversized)	AR	69-86	44134X	6261120(OS)
PRESSURE PLATES					
210B	Forward & Direct (.245"-.255")	1-2	69-86	44146	N.L.
232B	Forward & Direct (.275"-.285")	1-2	69-86	44146A	6261349
FILTERS					
502E	Screen, Oil Pump Pressure	1	69-86	44012	6261323
506E	Screen, Governor	1-2	69-86	44014	6273269
552E	Filter, Felt	1	69-86	44010A	8641443
552E	Filter, Nylon	1	69-86	44010B	8640848
552E	Filter, Brass	1	69-86	44010	6438816
FILTER KITS					
N.I.	Filter Kit, Brass	1	69-86	44011	44011
N.I.	Filter Kit, Felt	1	69-86	44011A	44011AF
N.I.	Filter Kit, Nylon	1	69-86	44011B	44011BF
BANDS					
142A	Intermediate Single Wrap	1	69-86	44022	6261132
142A	Intermediate Double Wrap (250, 250C Only)	1	69-86	44022G	8641196
BUSHINGS					
N.I.	Bushing Kit	1	69-79	44030	N.L.
N.I.	Bushing Kit	1	80-86	44030A	N.L.
102A	Pump	1	69-86	44034	29511860
102A	Pump (Teflon)	1	69-86	44034T	N.L.
108A	Stator (Front)	1	69-79	44036	1381366
108A	Stator (Front)	1	80-86	44036B	8641073
124A	Stator (Rear)	2	69-86	44037	6261022
150A	Direct Drum (Narrow) Babbitt	1	69-86	44046	6261026
150A	Direct Drum (Narrow) Bronze	1	69-86	44046B	8640099
150A	Direct Drum (Wide, No Oil Grooves)	1	69-86	44046C	6261026
238B	Input Ring Gear (Babbitt)	1	69-86	44050	8641117
302C	Sun Gear & Rear Planet	3	69-86	44052	6261033
336C	Output Shaft Pilot (Bronze) (.500" Long)	1	69-79	44062	3789034
336C	Output Shaft Pilot (Bronze) (.750" Long)	1	69-79	44062B	N.L.
336C	Output Shaft Pilot (Plastic)	1	80-86	44062C	8641058
434D	Extension Housing (Babbitt)	1	69-86	44066	3717682
434D	Extension Housing (Bronze)	1	69-86	44066B	6260048
452D	Case	1	69-86	44064	6261016
452D	Governor Bore (Use w/ T-0107 Repair Tool)	1	69-86	44064B	1235259

GM

ILL.		Qty.	Year	Part #	Ref. #
THRUST WASHERS/BEARINGS					
N.I.	Washer Kit	1	69-79	44200	N.L.
N.I.	Washer Kit	1	80-86	44200B	N.L.
N.I.	Washer Kit, Pump Shim Kits (6 Shims)	1	69-86	44200	N.L.
140D	Stator # 1 .066"	1	69-86	44211	6261015
140D	Stator # 2 .083"	1	69-86	44211A	6261013
140D	Stator # 3 .100"	1	69-86	44211B	6261014
234B	Forward Drum to Hub	1	69-86	44232	6261027
234B	Forward Drum to Hub (Plastic)	1	69-86	44232A	8640060
240B	Front Planet to Hub	1	69-86	44235	6260374
308C	Shell to Inner Race	1	69-86	44244	6261184
308C	Shell to Inner Race (Plastic)	1	69-86	44244A	8642331
320C	Rear Planet to Support	1	69-86	44251	6261124
BEARINGS					
201H	Bearing Kit	1	69-86	44201A	N.L.
140A	Bearing, Stator	1	69-86	44211C	9436851
212B	Bearing, Direct Drum to Forward Drum	1	69-86	44229	9428864
320C	Bearing, Rear Planet to Support	1	69-86	44251A	1256852
324C	Bearing, Rear Ring Gear to Case	1	69-86	44254	8640228
SHIMS					
N.I.	Pump, .005" (selective thickness and suffix below)	AR	69-86	44212A	N.L.
	.010"=A, .015"=B, .020"=C, .025"=D, .030"=E, .035"=F				
N.I.	Rear, .010" (selective thickness and suffix below)	AR	69-86	44255	77406-10
	.020"=A, .030"=B, .035"=C, .040"=D, .045"=E				
ELECTRICAL COMPONENTS					
522E	Solenoid (Universal)	1	80-86	44425U	N.L.
522E	Solenoid (No Wires in Connector) (2 Spades)	1	80-86	44425	1997588
522E	Solenoid (2 Wires in Connector) (1 Spade)	1	80-86	44425D	1997592
522E	Solenoid (2 Wires in Connector) (2 Spades)	1	80-86	44425B	1997583
522E	Solenoid (2 Wires in Connector) (3 Spades)	1	80-86	44425G	1997587
522E	Solenoid (2 Wires in Connector) (No Spades)	1	80-86	44425A	1997585
546E	Switch, Governor Switch (40 PSI) Purple Stripe	1	80-86	44416A	8648060
546E	Switch, Governor Switch (50 PSI) White Stripe	1	80-86	44416D	8633397
546E	Switch, Governor Switch (54 PSI) Blue Stripe	1	80-86	44416E	8633360
546E	Switch, GM Non Grounding Governor Lock-Up Delay	1	80-86	44416G	N.L.
546E	Switch, Governor Non-Grounding	1	80-86	44416G	N.L.
VALVE BODY RECALIBRATION KITS					
N.I.	Shift Kit®, 350/350C (Transgo®)	1	69-86	T44165	SK® 350
N.I.	Valve Body Kit, 350 (Superior)	1	69-86	S44165	K-350
N.I.	Valve Body Kit, 350 High Performance (Superior)	1	69-86	S44165P	K350-HP
N.I.	Reprogramming Kit™, Non Lock-Up Heavy Duty & Competition (Transgo®)	1	69-86	T44171	350-1&2
N.I.	Reprogramming Kit™, w/ Lock-Up Heavy Duty & Competition (Transgo®)	1	69-86	T44171A	350C-1&2
N.I.	Reprogramming Kit™, Non Lock-Up Full Manual Control Stick Shift (Transgo®)	1	69-86	T44173	350-3
VALVE BODY COMPONENTS					
544E	Valve Body (350, 350C)	1	69-80	44740	N.L.
N.I.	Check Ball, Valve Body (Steel) (1/4")	4	69-86	44741-5	6261179
N.I.	Check Ball, Valve Body (Viton) (1/4") (can use 76741A-5)	4	69-86	44741V-5	6261179
N.I.	Boost Valve w/ Sleeve	1	69-86	S44741F	35754-01K
N.I.	Boost Valve & Sleeve (Progressive Line Pressure Increase)	1	69-86	S44741FA	350-LB1
N.I.	Repair Kit, Fixes 5 Valve Body Plate Holes Most w/ 1/4" Ck Balls (Teckpak)	1	69-86	VB-101	N.L.
PUMPS					
104A	Pump Body, 350	1	L69-79	44510A	8641911
112A	350 Bearing Type	1	69-79	44500A	N.L.
112A	350 Washer Type	1	69-79	44500	6264919
112A	350C Lock-Up	1	80-86	44500C	N.L.
PUMP COMPONENTS					
106A	Pump Gears (.721")	1	69-79	44530A	N.L.
106A	Pump Gears (.723")	1	69-79	44530AA	N.L.
106A	Pump Gears (.725")	1	69-79	44530AB	N.L.
106A	Pump Gears (.727")	1	69-79	44530AC	N.L.
106A	Pump Gears (.841")	1	80-86	44530AD	8641422

GM

ILL.		Qty.	Year	Part #	Ref. #
PUMP COMPONENTS (Cont.)					
106A	Pump Gears (.843")	1	80-86	44530AE	8641426
106A	Pump Gears (.845")	1	80-86	44530AG	864142
DRUMS & COMPONENTS					
154A	Drum, Direct without Sprag	1	69-86	44555	8640307
220B	Drum, Forward (without Input Shaft)	1	69-86	44554	360943
N.I.	Piston Kit, Direct Drum (5 Clutch)	1	69-86	44565	N.L.
N.I.	Piston Kit, Low/ Reverse Clutch (5 Clutch)	1	69-86	44566	N.L.
PLANETS & COMPONENTS					
236B	Ring Gear, Front Planet (Washer Type)	1	69-86	44592	6261401
236B	Ring Gear, Front Planet (Bearing Type)	1	69-86	44592A	N.L.
244B	Planet, Front Bearing Type	1	69-86	44582A	1250023
244B	Planet, Front Washer Type	1	69-86	44582	1250023
318C	Planet, Rear Low/ Reverse	1	69-86	44584	6261645
322C	Ring Gear, Rear Planet (Washer Type)	1	69-86	44594	1250022
322C	Ring Gear, Rear Planet (Bearing Type)	1	69-86	44594A	N.L.
SUN GEARS					
304C	Sun Gear & Shell Kit, Driving	1	70-86	44622AK	N.L.
ONE WAY CLUTCHES					
146A	Outer Race, Intermediate Sprag (Heavy Duty)	1	69-86	44663HD	35723HD-01
148A	Sprag, Intermediate	1	69-86	44652	7471025
312C	Sprag, Low/ Reverse	1	69-86	44654	6261305
314C	Inner Race, Low/ Reverse Sprag	1	69-86	44664	8673300
SHELLS & SUPPORTS					
310C	Center Support Assembly	1	69-86	44631	N.L.
N.I.	Clip, Low/ Reverse (Center Support) (Anti-Clunk Spring)	1	69-86	74639	6261415
SHAFTS					
216B	Input Shaft (Bushing Type)	1	69-79	44670A	14033579
216B	Input Shaft (Lock-Up)	1	80-86	44670C	14024301
338C	Output Shaft, 9.625" Long (4wd)	1	80-86	44678C	8641088
338C	Output Shaft, 15.500" Long	1	69-86	44678	8641076
VALVE BODIES & GOVERNORS					
508E	Gear, Governor Driven Gear Kit	1	69-86	44684	6261660
510E	Governor	1	69-86	44680	464200
514E	Cover, Governor	1	69-86	44686	8667827
516E	Clip, Governor Cover	1	69-86	74687	6260040
N.I.	Governor Kit, Springs & Weights (Superior)	1	69-86	44681-4K	N.L.
MISCELLANEOUS COMPONENTS					
414D	Spring, Intermediate Accumulator (Orange)	1	69-86	44926	6261140
424D	Bracket, Modulator (Bolts to Extension Housing)	1	69-86	44843C	6261285
426D	Modulator, Single Red Stripe Adjustable	1	69-86	44160R	1394525
426D	Modulator, Black & Red Stripe	1	69-86	44160B	8625976
426D	Modulator, Dual Red Stripe	1	69-86	44160D	34820S
446D	Gear Housing, For 34-39T Speedo Driven Gear (Plastic)	1	69-86	44774BA	1247266
446D	Gear Housing w/ Seals, For 34-39T Speedo Driven Gear (Aluminum)	1	69-86	44774BAM	N.L.
446D	Gear Housing w/ Seals, For 40-43T Speedo Driven Gear (Aluminum)	1	69-86	44774BM	N.L.
446D	Speed-O Housing, .875" Steel (Bullet)	1	69-86	44774	25513247
560E	Filler Tube & Dip Stick (Universal)	1	69-86	T44494U	N.L.
N.I.	Bracket, 4wd (Allows 6 Bolt Dust Cover to Bolt to a 4 Bolt Case)	1	69-86	44846	N.L.
N.I.	Pin Kit, Direct Accumulator	1	69-86	44933AK	35718-01K
N.I.	Pin Kit w/ Reamer, Direct Accumulator	1	69-86	44933BK	35718-02K
N.I.	Case Saver (4 Piece)	1	69-86	44761A	N.L.
N.I.	Case Fix, Center Support, Wide Sprag Type All Years	1	69-86	74761D	N.L.
TECHNICAL MANUALS					
N.I.	350/350C	1	69-86	44400	83-350TM
TOOLS					
N.I.	Governor Bore Repair Tool (Uses 30104A)	1	69-86	T-0107	N.L.
N.I.	Governor Bore Repair Driver	1	69-86	T-0107-D	N.L.

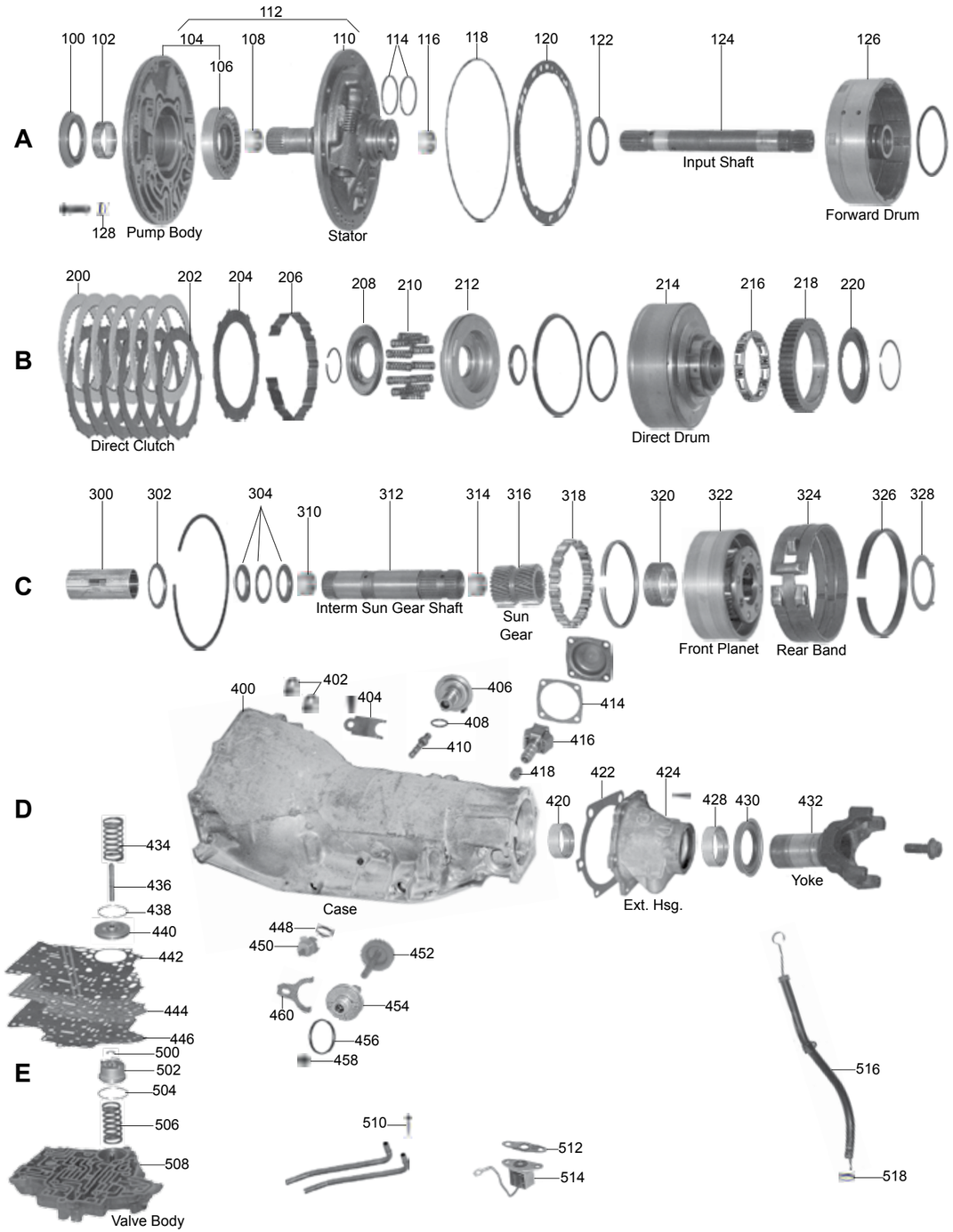
A
100
102
104
106
108
110
112
114
116
118
120
122
124
126
128
Pump Body
Stator
Input Shaft
Forward Drum
B
200
202
204
206
208
210
212
214
216
218
220
Direct Clutch
Direct Drum
C
300
302
304
310
312
314
316
318
320
322
324
326
328
Interm Sun Gear Shaft
Sun Gear
Front Planet
Rear Band
D
400
402
404
406
408
410
414
416
418
420
422
424
428
430
432
Case
Ext. Hsg.
Yoke
434
436
438
440
442
444
446
448
450
452
454
456
458
460
E
500
502
504
506
508
Valve Body
510
512
514
516
518

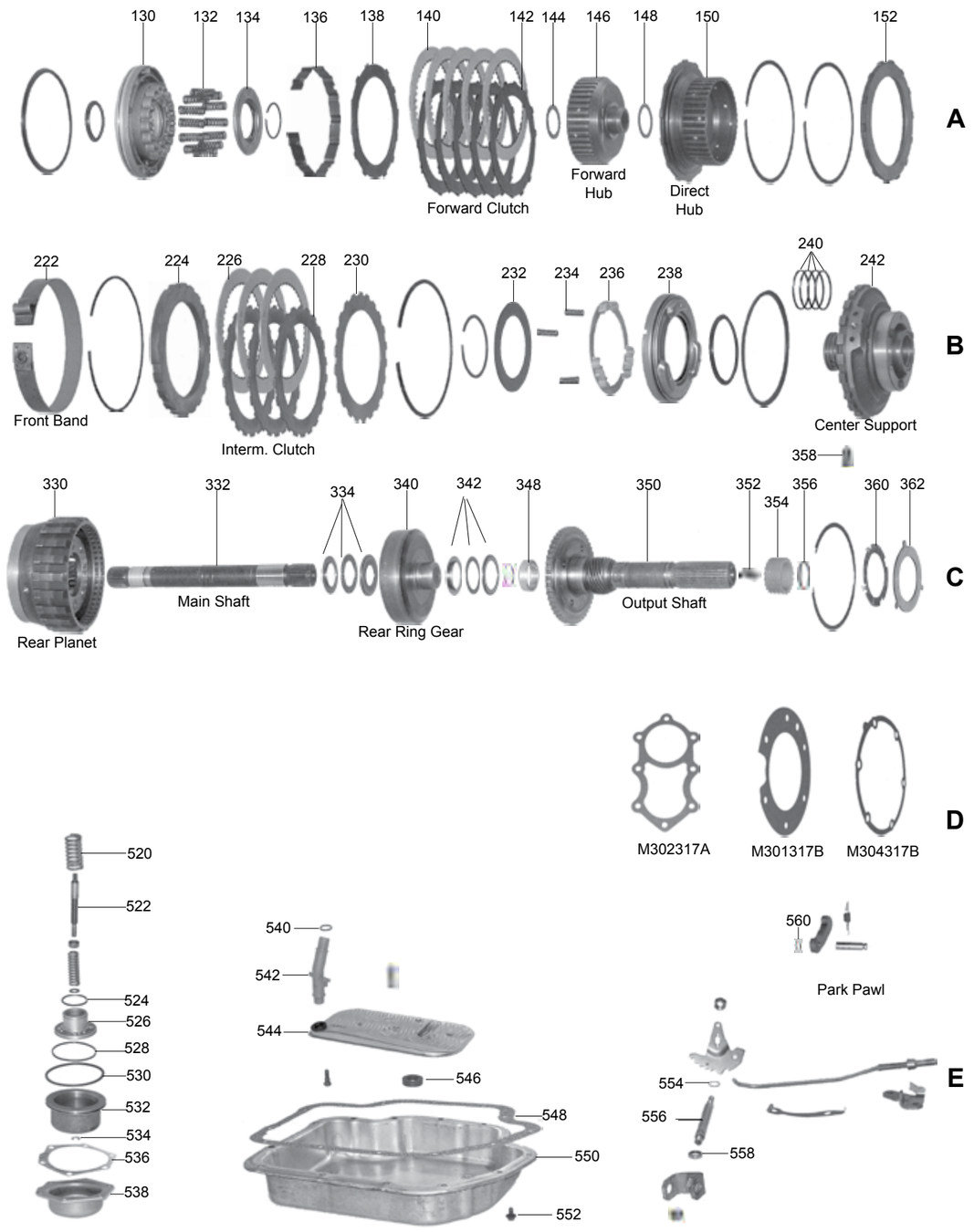
A
130
132
134
136
138
140
142
144
146
148
150
152
Forward Clutch
Forward Hub
Direct Hub
B
222
224
226
228
230
232
234
236
238
240
242
Front Band
Interm. Clutch
Center Support
C
330
332
334
340
342
348
350
352
354
356
358
360
362
Rear Planet
Main Shaft
Rear Ring Gear
Output Shaft
D
M302317A
M301317B
M304317B
E
520
522
524
526
528
530
532
534
536
538
540
542
544
546
548
550
552
554
556
558
560
Park Pawl

ILL.		Qty.	Year	Part #	Ref. #
DELUXE KITS (SUPER KITS WITH STEELS)					
N.I.	400 (Complete Ring Kit)	1	65-98	34008A	N.L.
MASTER OVERHAUL KITS (WITH STEELS)					
N.I.	400 (Short Ring Kit)	1	65-98	34006	N.L.
N.I.	400 (Complete Ring Kit)	1	65-98	34006A	N.L.
MASTER OVERHAUL KITS (LESS STEELS)					
N.I.	400 (Short Ring Kit)	1	65-98	34004	N.L.
N.I.	400 (Complete Ring Kit)	1	65-98	34004A	N.L.
OVERHAUL KITS (WITH RINGS AND SEALS)					
N.I.	400 (Short Ring Kit)	1	65-98	34002	N.L.
N.I.	400 (Complete Ring Kit)	1	65-98	34002A	N.L.
GASKETS & O-RINGS					
118A	O-Ring, Front Pump	1	65-98	44311	23016559
120A	Gasket, Front Pump	1	65-98	34310	8623978
128A	Gasket, Pump Bolt Washer	6-8	65-98	44309	MD707653
414D	Gasket, Governor Cover	1	65-98	34306	23011670
422D	Gasket, Extension Housing	1	65-98	34305	8624709
442D	Gasket, Case to Spacer Plate (6 Check Ball Type)	1	65-E87	34320	8623563
442D	Gasket, Case to Spacer Plate (7 Check Ball Type)	1	L87-98	34320A	8670458
446D	Gasket, Valve Body to Spacer Plate (6 Check Ball Type)	1	65-E87	34321	8623174
446D	Gasket, Valve Body to Spacer Plate (7 Check Ball Type)	1	L87-98	34321A	8670447
456D	O-Ring, Speed-O-Housing	1	65-98	34369A	25501478
512E	Gasket, Valve Body Detent Solenoid	1	65-98	34328	8623494
518E	O-Ring, Filler Tube	1	65-98	44371A	6030608
518E	Boot, Filler Tube	1	65-98	44371B	E2FZ-7N243A
536E	Gasket, Rear Servo Cover	1	65-98	34307	8623174
548E	Gasket, Pan	1	65-98	34300	8623266
N.I.	Gasket, 231 Transfer Case to Extension Housing	1	88-98	351304	14040513
N.I.	Gasket, 241 & 208 Transfer Case to Extension Housing	1	88-98	331304A	N.L.
N.I.	Gasket, 205 Transfer Case to Extension Housing	1	74-98	311304	N.L.
N.I.	O-Ring, Pump Bolt	1	88-98	34312	N.L.
N.I.	O-Ring, Filter Pick-Up Tube	1	65-98	12368A	1363951
N.I.	O-Ring, Modulator & Case Connector	2	65-98	44369B	6264903
N.I.	External Seal Kit	1	65-98	34390	N.L.
METAL CLAD SEALS					
100A	Front	1	65-98	44070	8641300
430D	Rear (2.380" OD)	1	65-98	44074	D5AZ-7052A
430D	Rear (2.500" OD)	1	65-98	36074	C3AZ-7052A
430D	Rear (2.700" OD)	1	65-98	34074	8675730
430D	Rear (2.874" OD) (Motor Homes)	1	65-98	34074EA	8675731
458D	Speed-O Shaft (w/ Spring)	1	65-98	44078A	1240382
458D	Speed-O Shaft (w/o Spring)	1	65-98	44078X	1240382
558E	Linkage Shaft	1	65-98	44072	23010610
SEALING RINGS & KITS					
N.I.	Sealing Ring Kit (Short) (6 Rings) (Metal) (Add T Suffix Teflon)	1	65-98	34175	N.L.
N.I.	Sealing Ring Kit (Complete) (Metal) (Add T Suffix Teflon)	1	65-98	34175A	N.L.
114A	Stator (Metal) (Add T Suffix Teflon)	2	65-98	34181	8626356
240B	Center Support (Metal) (Add T Suffix Teflon)	4	65-98	34181	8626356
504E	Front Accumulator Piston (Metal) (Outer)	1	65-98	34192	8623653
438D	Front Servo Piston (Metal) (Add T Suffix Teflon)	1	65-98	34192	8623653
524E	Rear Accumulator (Inner) (Metal)	1	65-91	34198A	8623671
528E	Rear Accumulator (Outer) (Metal)	1	65-70	34199	8623672
528E	Rear Accumulator (Outer) (Metal) (Add T Suffix Teflon)	1	71-91	34199A	8627153
FRICTION PLATES					
140A	Forward & Direct (Smooth)	10	65-98	34106	8655619
140A	Forward & Direct (Radial)	10	65-98	34106G	8625300
140A	Forward & Direct (Waffle)	10	65-98	34106HD	8625300
140A	Forward & Direct (High Performance)	10	65-98	34106HP	N.L.

ILL.		Qty.	Year	Part #	Ref. #
FRICTION PLATES (Cont.)					
226B	Intermediate (Smooth)	3	65-98	34104	8655620
226B	Intermediate (Waffle)	3	65-98	34104HD	8623151
226B	Intermediate (High Performance)	3	65-98	34104HP	N.L.
STEEL PLATES					
142A	Forward (.077")	4	65-98	34128	8623849
142A	Forward (.077") (Kolene)	4	65-98	34128B	8623849
142A	Forward (.060")	AR	65-98	34126B	N.L.
202B	Direct (.090")	4-5	65-98	34126A	29530330
202B	Direct (.090") (Kolene)	4-5	65-98	34126D	8625197
202B	Direct (.060")	AR	65-98	34126B	N.L.
204B	Forward & Direct (.060") (Waved)	1	65-98	34127	8623851
204B	Forward & Direct (.054") (Dished)	1	65-98	34127D	8680816
228B	Intermediate (.100")	2	65-98	34124	8623150
228B	Intermediate (.100") (Kolene)	2	65-98	34124K	8623150
228B	Intermediate (.076") (Kolene)	2	65-98	34124H	8675522
230B	Intermediate (.070") (Waved)	1	65-98	34125	8624199
PRESSURE PLATES					
152A	Direct Clutch	1	65-98	34146	8661575
224B	Intermediate Clutch	1	65-98	34144	8623152
FILTERS					
542E	Filter Pipe Intake, Deep Pan Type (Plastic)	1	65-98	34495	8629526
542E	Filter Pipe Intake, Shallow Pan Type (Plastic)	1	65-98	34495A	8626886
544E	Filter, Flat (Felt)	1	L67-98	34010A	6438348
544E	Filter, Flat (Brass)	1	L67-98	34010B	29503617
544E	Filter, Tube	1	64-E67	34010	5579822
N.I.	Screen, Governor (Tapered)	1	65-98	54016B	8627509
FILTER KITS					
N.I.	Filter Kit, Tube	1	64-E67	34011	34011
N.I.	Filter Kit, Flat (Felt)	1	L67-98	34011A	34011AF
N.I.	Filter Kit, Flat (Brass)	1	L67-98	34011B	34011BF
BANDS					
222B	Front (1" Wide)	1	65-98	34022	24202631
222B	Front (1" Wide) (Kevlar)	1	65-98	34022K	24202631
222B	Front (1.250" Wide)	1	65-98	34022E	24210080
324C	Rear (Reverse)	1	65-98	34024	8681820
BUSHINGS					
N.I.	Bushing Kit (Complete)	1	65-98	34030	8629961
102A	Pump	1	65-98	44034	29511860
102A	Pump (Teflon)	1	65-98	44034T	N.L.
108A	Stator Support (Front & Rear)	2	65-98	34037	23015807
300C	Center Support	1	65-98	34044	8623942
310C	Sun Gear Shaft (Front & Rear)	2	65-98	34037	23015807
320C	Front Planet	1	65-98	34053	8623192
348C	Output Shaft (.680" Wide)	1	65-74	34062	8623943
348C	Output Shaft (.410" Wide)	1	74-98	34062B	8624988
420D	Case	1	65-98	34064	8623941
420D	Case Repair Bushing (Use w/ 44211C Shim)	1	65-98	34064BD	N.L.
428D	Extension Housing (1.995" OD) 1.500" Long	1	65-98	34066	8623966
N.I.	Governor Bore	1	65-98	44064B	1235259
THRUST WASHERS/BEARINGS					
WASHERS					
N.I.	Washer Kit	1	65-98	34200	N.L.
122A	Stator .062"	1	65-98	34211	8623300
122A	Stator .073"	1	65-98	34211A	8623301
122A	Stator .084"	1	65-98	34211B	8623302
122A	Stator .095"	1	65-98	34211C	8623303
122A	Stator .106"	1	65-98	34211D	8623304
122A	Stator .117"	1	65-98	34211E	8623305

ILL.		Qty.	Year	Part #	Ref. #
WASHERS (Cont.)					
122A	Stator .128"	1	65-98	34211G	8623306
144A	Forward Drum to Forward Hub	1	65-98	34232	8624196
148A	Forward Hub to Direct Drum	1	65-98	34235	23013454
148A	Forward Hub to Direct Drum (Plastic)	1	65-98	34235A	8624781
302C	Center Support to Front Planet (Metal)	1	65-98	34226	8624783
302C	Center Support to Front Planet (Plastic)	1	65-98	34226A	8623211
328C	Front Planet to Rear Planet (4 Tang, Metal)	1	65-98	34268	8626372
328C	Front Planet to Rear Planet (4 Tang, Plastic)	1	65-98	54244A	8628766
360C	Output Shaft to Case (4-Tang) (Metal)	1	65-98	34268	8626372
362C	Output Shaft to Case .084" (3-Tang)	1	65-98	34269A	8625402
362C	Output Shaft to Case .092" (3-Tang)	1	65-98	34269B	8625403
362C	Output Shaft to Case .100" (3-Tang)	1	65-98	34269C	8625404
362C	Output Shaft to Case .108" (3-Tang)	1	65-98	34269D	8625405
N.I.	Case Saver (3 Tang Washer Replacement)	1	65-98	34270T	34270T
BEARINGS					
N.I.	Bearing Kit	1	65-98	34201A	8623300
N.I.	Race, Sun Gear to Rear Ring Gear (Front)	1	65-98	34250	24211821
N.I.	Shim, Output Shaft (.005")	1	65-98	S34270	34006-05
304C	Bearing w/ Race, Center Support to Sun Gear	1	65-98	34242K	8623920
334C	Bearing w/ Race, Sun Gear to Rear Ring Gear	1	65-98	34249AK	24208848
342C	Bearing w/ Race, Rear Ring Gear to Output Shaft	1	65-98	34256K	8623922
ELECTRICAL COMPONENTS					
450D	Connector, 1 Prong (Large OD)	1	68-98	34444A	24205373
450D	Connector, 2 Prong w/ Variable Pitch (Large OD)	1	65-67	34444B	2984091
450D	Connector, 2 Prong w/o Variable Pitch (w/ Insulator)	1	70-82	34444C	8629502
514E	Solenoid, Valve Body Detent	1	65-82	34420	8629935
N.I.	Switch, Spark Control	1	65-98	34414	8627332
N.I.	Speed Sensor, Vehicle (VSS)	1	85-Up	34436T	8655291
VALVE BODY RECALIBRATION KITS					
N.I.	Shift Kit, 400 (Transgo)	1	65-98	T34165	SK® 400
N.I.	Valve Body Kit, 400 (Superior)	1	65-98	S34165	K-400
N.I.	Reprogramming Kit™, Heavy Duty & Competition (Transgo)	1	65-98	T34169	400-1&2
N.I.	Reprogramming Kit™, Pro Race Kit (Transgo)	1	65-98	T34171	400-PRO
N.I.	Reprogramming Kit™, Competition Only, Stick Shift Full Control (Transgo)	1	65-98	T34173	400-3
PUMPS					
104A	Pump Body & Gears (Universal)	1	71-98	A34510	N.L.
112A	Pump, 6 Bolt (Body Cast # 895, Stator Cast # 896)	1	71-98	34500	23018811
112A	Pump, 8 Bolt (Body Cast # 895, Stator Cast # 896)	1	65-98	34500A	N.L.
PUMP COMPONENTS					
106A	Pump Gears, .727"	1	65-98	44530AC	N.L.
N.I.	Plug, End For Pressure Valve (10 Per Bag)	1	65-98	34507P-6A	34910-06K
N.I.	Pressure Regulator Shim	1	65-98	34507S	34203-01K
DRUMS & COMPONENTS					
126A	Drum, Forward	1	65-98	34554	8624908
146A	Clutch Hub, Forward Clutch	1	65-98	34574	8661611
150A	Clutch Hub, Direct Clutch	1	65-98	34575	8625718
214B	Drum, Direct (5 Clutch No Check Ball) (Sprag Type)	1	65-98	34555	8627435
214B	Drum, Direct (5 Clutch w/ Check Ball) (Roller Type)	1	65-98	34555A	8679959
214B	Drum, Direct (6 Clutch No Check Ball) (Sprag Type)	1	65-98	34555CA	N.L.
214B	Drum, Direct (6 Clutch w/ Check Ball) (Sprag Type)	1	65-98	34555C	8679960
N.I.	Piston Kit, Intermediate Clutch (Aluminum)	1	65-98	34562	8670196
N.I.	Piston Kit, Direct (5 Clutch) (Aluminum w/ Check Ball)	1	65-98	34565	N.L.
N.I.	Piston Kit, Direct (6 Clutch) (Aluminum w/ Check Ball)	1	65-98	34565C	N.L.
PLANETS & COMPONENTS					
322C	Planet, Front (Angled Teeth) (No Tab Roller Style Sprag)	1	67-98	34582A	24212051
322C	Planet, Front (Angled Teeth) (8 Tab Roller Style Sprag)	1	67-98	34582AA	8627893
322C	Planet, Front (Straight Teeth)	1	65-98	34582S	24205552
330C	Planet, Rear (Angled Teeth 0.5" Parking Lugs)	1	65-98	34584	8655132
330C	Planet, Rear (Angled Teeth 1.5" Parking Lugs)	1	65-98	34584A	N.L.

ILL.		Qty.	Year	Part #	Ref. #
PLANETS & COMPONENTS (Cont.)					
330C	Planet, Rear (Straight Teeth 0.5" Parking Lugs)	1	65-98	34584S	8681946
330C	Planet, Rear (Straight Teeth 1.5" Parking Lugs)	1	65-98	34584SA	N.L.
340C	Ring Gear, Rear Planet (Angled Teeth)	1	65-98	34594	8661892
340C	Ring Gear Kit w/ Main Shaft Hollow Type (Angled Teeth)	1	65-98	34594K	N.L.
340C	Ring Gear Kit w/ Main Shaft Hollow Type (Straight Teeth)	1	65-98	34594SK	8675532
SUN GEARS					
316C	Angled Teeth (28 Spline Inside)	1	65-98	34612A	8626807
316C	Angled Teeth (32 Spline Inside)	1	65-98	34612	8626807
316C	Straight Teeth (32 Spline Inside)	1	65-98	34612S	8627130
ONE WAY CLUTCHES					
216B	Sprag, Intermediate (8 Roller Type)	1	72-98	34652	8625814
216B	Sprag, Intermediate (16 Elements)	1	65-77	34652B	8623116
216B	Sprag, Intermediate (34 Elements) Heavy Duty	1	65-77	34652A	8633173
218B	Race, Intermediate Sprag (Outer Race .751")	1	65-98	34663	8629487
318C	Sprag, Low Clutch Roller (Rear)	1	65-98	34654	7471002
SHELLS & SUPPORTS					
242B	Center Support	1	65-98	34630	8680914
SHAFTS					
124A	Input Shaft	1	65-98	34670	8624772
312C	Intermediate Sun Gear (32 Spline on Sun Gear)	1	65-96	34674	N.L.
312C	Intermediate Sun Gear (28 Spline on Sun Gear)	1	65-98	34674A	8661708
332C	Main Shaft, 10.250" Long (w/ Restrictor Plug)	1	65-98	34672	N.L.
332C	Main Shaft, 10 3/16" Long (No Plug)	1	65-98	34672A	8661613
350C	Output Shaft, 6" 4wd	1	82-98	34678HA	8679991
350C	Output Shaft, 7" 4wd	1	77-82	34678H	8629461
350C	Output Shaft, 9" w/o Rubber O-Ring Groove	1	65-98	34678E	8627453
350C	Output Shaft, 15" (400 Trans)	1	65-98	34678B	N.L.
VALVE BODIES & GOVERNORS					
416D	Governor	1	65-98	34680	8623852
418D	Gear, Governor Gear Repair Package	1	65-98	34684	8623924
508E	Valve Body (Without Reverse Check Ball)	1	87-Up	34740-4	N.L.
508E	Valve Body (With Reverse Check Ball)	1	87-Up	34740-5	N.L.
N.I.	Gear Kit, Springs & Weights	1	65-98	44681-4K	N.L.
N.I.	Repair Kit, Fixes 5 Valve Body Plate Holes (Most w/ .250" Holes)	1	65-98	VB-101	N.L.
CASES/HOUSINGS & COMPONENTS					
400D	Case, Chevy (6 Check Ball Type)	1	65-98	34760	N.L.
400D	Case, Chevy (6 Check Ball Type) 4wd 6 Bolt Dust Cover	1	77-90	34760D	N.L.
400D	Case, Chevy (7 Check Ball Type)	1	65-98	34760A	N.L.
550E	Pan, Deep	1	65-98	34765D	8679994
MISCELLANEOUS COMPONENTS					
326C	Silencer Ring, Output Carrier .177"	1	69-98	34476	8626112
326C	Silencer Ring, Output Carrier .170" (Use 34476)	1	73-98	34476E	8627199
354C	Rotor, Speed-O Reluctor (Electronic Pick-Up)	1	65-98	34847R	8655315
454D	Speed-O Housing (34-39T Gear Type) Aluminum	1	65-98	34774	1362294
454D	Speed-O Housing (40-45T Gear Type) Aluminum	1	65-98	34774A	1362293
406D	Modulator, Single Red Stripe Adjustable	1	65-98	44160R	1394525
406D	Modulator, Black & Red Stripe	1	65-98	44160B	8625976
406D	Modulator, Dual Red Stripe	1	65-98	44160D	34820S
516E	Filler Tube & Dip Stick (Universal)	1	69-86	T44494U	N.L.
556E	Shaft, Manual Lever	1	65-98	34991-1	8679990
N.I.	Hose, Modulator (Elbow)	1	65-98	44162	C1AZ-7B087-E
SERVOS & ACCUMULATORS					
434D	Spring, Front Servo	1	65-98	34906	8623489
440D	Piston, Front Servo (w/ 3 Tabs on Piston)	1	65-98	34907	8678537
502E	Piston, Accumulator (Aluminum w/ 3 Legs)	1	65-98	34927	8626883
506E	Spring, Accumulator (White)	1	65-98	34926B	8626775
520E	Spring, Rear Servo (Blue)	1	65-98	34946	8624256
520E	Spring, Rear Servo (Yellow)	1	65-98	34946A	8624391

ILL.		Qty.	Year	Part #	Ref. #
SERVOS & ACCUMULATORS (Cont.)					
522E	Pin, Rear Servo (3.471")	1	65-98	34913H	8627194
522E	Pin Extender, Rear Servo	1	65-98	T34913	N.L.
N.I.	Servo Assembly, Rear	1	65-98	34910	N.L.
N.I.	Servo Assembly, Rear (w/ Raised Hump on Piston)	1	65-98	34910A	N.L.
N.I.	Accumulator Assembly w/ Seals (Upgrade Service Package)	1	65-98	34947K	24205250
N.I.	Oversized Accum Pin Kit	1	65-98	34933X	34105-01K
N.I.	Oversized Accum Pin & Reamer Kit	1	65-98	34933XK	34105-02K
TECHNICAL MANUALS					
N.I.	Technical Manual	1	65-98	34400	83-400TM

Notes

Notes

A

100 102 104 106 108 110 112 114 116 118
120
Bell Hsg.
Stator w/Gears

B

200 202 204 206 208 210 212 214 216 218 220
Overrun Clutch
O.Dr. Sun Gear
O.Dr. Planet
O.Dr. Ring Gear

C

300 302 304 306 308 310 312 314 318 320 322
Reverse Clutch
2nd Clutch Drum
2nd Clutch

D

400 402 404 406 408 410 412 414 416 418 420 422 424 426 428 430
3rd Clutch Sprag
Rear Planet
Rear Sun Gear
Low Drum
Low Band

E

Park Pawl
Linkage
500 504 506
Ext. Wire Harness
508 510 512 514 516 518 520
O.Dr. Pan

A

122 124 126 128 130 132 134 136 138 140 142 146 148 150
Turbine Shaft
4th Clutch
152 154
4th Accum.
156 158
Overrun Drum
O.Dr. Sprag

B

222 224 226 228 230 232 234 236 238 242
O.Dr. Case
Center Support

C

324 326 328 330 332 334 336 340 342 344 346 348 350
Ring Gear
3rd Clutch Drum
352 354 356
3rd Clutch
Front Sun Gear

D

432 434 436 438 440 442 444 446 448 450 452 454 456 458
460
Park Gear
Ext. Hsg.

E

522 524 526 528 530 532 534 536 538 540 542 544 548
747
550 552 554 556 558 560 562 564

ILL.		Qty.	Year	Part #	Ref. #
MASTER OVERHAUL KITS (WITH STEELS)					
N.I.	4L30E (w/ .098" 3rd Clutch Friction) (Exc 95-97 BMW)	1	90-97	24006EF	N.L.
N.I.	4L30E (w/ .063" 3rd Clutch Friction) (Incl 95-97 BMW)	1	98-Up	24006EAF	N.L.
MASTER OVERHAUL KITS (LESS STEELS)					
N.I.	4L30E (w/ .098" 3rd Clutch Friction) (Exc 95-97 BMW)	1	90-97	24004EF	N.L.
N.I.	4L30E (w/ .063" 3rd Clutch Friction) (Incl 95-97 BMW)	1	98-Up	24004EAF	N.L.
OVERHAUL KITS (WITH RINGS AND SEALS)					
N.I.	4L30E	1	90-Up	24002EF	N.L.
GASKETS & O-RINGS					
114A	O-Ring, Pump	1	90-Up	24311	96017189
116A	Gasket, Pump	1	90-Up	24310E	96014973
450D	Gasket, Extension Housing	1	90-Up	24305E	96014417
512E	Gasket Kit, Auxiliary VB	1	90-Up	24322K	N.L.
518E	Gasket, Front Overdrive Pan	1	90-Up	24301AF	8-9014-235-0
522E	Gasket, Upper Valve Body	1	90-Up	24320B	N.L.
554E	Gasket, Lower Valve Body	1	90-Up	24321B	N.L.
562E	Gasket, Pan (Exc BMW)	1	90-Up	24300AF	96014234
562E	Gasket, Pan (BMW)	1	90-Up	24300BF	96015015
METAL CLAD SEALS					
100A	Front	1	90-Up	24070A	96015187
460D	Linkage Shaft	1	90-Up	84072A	8644709
N.I.	Rear	1	90-Up	69074	24111-207-426
SEALING RINGS & KITS					
N.I.	Ring Kit	1	90-Up	24175E	N.L.
FRICTION PLATES					
124A	4th Clutch	2-3	90-Up	24100	96014459
202B	Overrun	2	90-Up	24116	96014195
302C	Reverse	2-5	90-Up	24110	5258017
322C	2nd Clutch	3-6	90-Up	24104	5258025
344C	3rd Clutch (.063")	2-6	95-Up	24106A	96017371
344C	3rd Clutch (.100")	2-5	90-Up	24106	5258035
STEEL PLATES					
122A	4th Clutch	4	90-Up	24120	96014187
200B	Overrun	2	90-Up	24136	96014194
300C	Reverse (.070")	3-5	90-Up	24130	5258019
300C	Reverse (.083")	3-5	90-Up	24130A	5258957
320C	2nd Clutch (.070")	3-7	90-Up	24124A	5258057
320C	2nd Clutch (.083")	3-7	90-Up	24124	5258956
342C	3rd Clutch (.070")	3-6	90-Up	24126A	5258086
342C	3rd Clutch (.083")	3-6	90-Up	24126	5258955
FILTERS					
560E	Filter (Exc BMW)	1	90-Up	24010E	8-96015-062-0
560E	Filter (BMW)	1	91-Up	24010EA	24111-218-899
N.I.	Screen, PWM Solenoid (3.750" Long In Valve Body)	1	90-Up	24015	96041012
N.I.	Screen, Force Motor (In Auxiliary Valve Body)	1	90-Up	24018	96041009
FILTER KITS					
N.I.	Filter Kit (Exc BMW)	1	90-Up	24011E	N.L.
N.I.	Filter Kit (BMW)	1	91-Up	24011EA	N.L.
BANDS					
422D	Low	1	90-Up	24026	5463805
BUSHINGS					
N.I.	Bushing Kit	1	90-Up	24030B	N.L.
102A	Pump (Narrow)	1	90-Up	24034A	8958661
102A	Pump (Wide)	1	90-Up	44034	29511860
110A	Stator Support Front	1	90-Up	54036A	8628915
232B	Center Support	1	90-Up	24044	N.L.

ILL.		Qty.	Year	Part #	Ref. #
BUSHINGS (Cont.)					
232B	Center Support (Bronze)	1	90-Up	24044X	N.L.
306C	2nd Clutch Drum	1	90-Up	24046	5258128
430D	Reaction Sun Gear	1	90-Up	24050	5258075
440D	Case	1	90-Up	24064	5258191
N.I.	Extension Housing (Exc 90-Up Tracker) 1.630"OD, .940" Tall	1	90-Up	44066B	6260048
THRUST WASHERS/BEARINGS					
WASHERS					
N.I.	Pump Washer Kit	1	90-Up	24200B	N.L.
118A	Pump Washer & Shim Kit	1	90-Up	24211K	54701-03K
118A	Pump .059" (Yellow) (3 Tabs) (067" Red=BA)	1	90-Up	24211B	96040561
	.075" Black=BB, .082" White=BC, .090" Green=BD, .098" Blue=BE				
216B	Overdrive Ring Gear to Overdrive Case (2 Tab) (4L30E)	1	90-Up	54223B	8634146
304C	Center Support Selective .063" (Yellow)	1	90-Up	24226A	96017289
	.070" Red=B, .077" Black=C, .085" White=D, .092" Green=E, .099"=Blue=F				
326C	2nd Drum to 3rd Drum (Front)	1	90-Up	24229	5258945
ELECTRICAL COMPONENTS					
432D	Connector, Case (3 Prong)	1	90-Up	74444A	8634383
432D	Connector, Case (Square 4 Prong) (6 Cyl 90-99) (4 Cyl 90-01)	1	90-01	84444	8662395
432D	Connector, Case (Round 7 Prong) (6 Cyl 00-Up) (4 Cyl 02-Up)	1	00-Up	24444E	96018330
500E	Internal Wire Harness, OD Hsg (5 Prong) (6 Cyl 90-99) (4 Cyl 90-01)	1	90-01	24446EB	96018480
500E	Internal Wire Harness, OD Hsg (4 Prong Orange Wire, 6 Cyl 00-Up, 4 Cyl 02-Up)	1	00-Up	24446EC	96018478
500E	Internal Wire Harness, OD Hsg (4 Prong Blue Wire w/ Push-in TCC)	1	00-Up	24446ED	8-96018-537-0
504E	Connector, Overdrive Housing (5 Prong) (6 Cyl 90-99) (4 Cyl 90-01)	1	90-01	24444	96015408
504E	Connector, Overdrive Housing (4 Prong) (6 Cyl 00-Up) (4 Cyl 02-Up)	1	00-Up	84444	8662395
508E	Solenoid, TCC Lock-Up	1	90-99	24425E	8-96014-183-0
508E	Solenoid, TCC Lock-Up	1	00-Up	34418	8676530
510E	Solenoid, EPC (Holley) (2 Bottom Prongs)	1	90-99	34435A	24209276
510E	Solenoid, EPC (Bosch) (2 Bottom Prongs)	1	90-99	34435	96014182
510E	Solenoid, EPC (Bosch) (2 Side Prongs)	1	00-Up	56431A	XL2Z-7G383AA
532E	Internal Wire Harness, Case (4 Prong) (Exc BMW) (6 Cyl 90-99) (4 Cyl 90-01)	1	90-99	24446E	96014855
532E	Internal Wire Harness, Case (6 Prong) (Exc BMW) (6 Cyl 00-Up) (4 Cyl 02-Up)	1	00-Up	24446EA	96018581
532E	Internal Wire Harness, Case (BMW)	1	91-Up	24446EE	N.L.
550E	Solenoid, 1-2 & 3-4 Shift	1	90-Up	24421E	8-96014-593-0
552E	Solenoid, 2-3 Shift	1	90-Up	24422E	96014224
558E	Solenoid, PWM (Low Band Control)	1	90-Up	24418	96042006
N.I.	Speed Sensor, Output (VSS) (Exc BMW)	1	90-Up	24436	8-96014-442-0
VALVE BODY RECALIBRATION KITS					
N.I.	Shift Kit® (BMW, Volvo, Cadillac) (Transgo®)	1	91-04	T24165E	SK® 4L30E
N.I.	Shift Correction Package (Superior)	1	90-Up	S24165E	K4L30-E
PUMPS					
112A	Stator w/ Gears (.515" OD Pressure Regulator)	1	90-Up	24520E	8-96041-018-0
112A	Stator w/ Gears (.595" OD Pressure Regulator)	1	90-Up	24520EA	96041018
112A	Stator w/ Gears (4 Valve Type)	1	00-Up	24520EB	N.L.
PUMP COMPONENTS					
106A	Plate, Pump	1	90-Up	24544E	8-96015-519-0
108A	Pump Gears (.626")	1	90-Up	24530	N.L.
N.I.	Boost Valve, Pump (Small Ratio Stamped 066)	1	90-Up	24507FB	54200-12K
N.I.	Boost Valve, Pump (Small Ratio Stamped 067)	1	90-Up	24507FC	54200-14K
N.I.	Boost Valve, Pump (Medium Ratio)	1	90-Up	24507	54200-01K
N.I.	Boost Valve, Pump (Large Ratio)	1	90-Up	24507FA	54200-06K
N.I.	Valve & Sleeve, TCC Reg	1	90-Up	24507	N.L.
DRUMS & COMPONENTS					
134A	Drum, Overrun Clutch	1	90-Up	24551	8-96015-290-0
308C	Drum, 2nd Clutch	1	90-Up	24552A	N.L.
330C	3rd Clutch Drum w/ Shaft	1	90-Up	24555E	8-96041-002-0
420D	Low Band (Less Rear Sun Gear)	1	90-Up	24557E	8-96014-581-0

4L30E

RWD
4 SPEED

ILL.		Qty.	Year	Part #	Ref. #
PLANETS & COMPONENTS					
210B	Overdrive Planet	1	90-Up	24580	8-96014-376-0
N.I.	Planet Package, 4 Gear (GM) (Slip Yoke) (2)	1	90-Up	24583FB	N.L.
N.I.	Planet Package, 4 Gear (BMW) (Bolt Yoke, .550" Dia Pilot) (2)	1	90-Up	24583	N.L.
N.I.	Planet Package, 4 Gear (BMW) (Bolt Yoke, .640" Dia Pilot) (2)	1	90-Up	24583FA	N.L.
N.I.	Planet Package, 4 Gear (Isuzu) (2wd) (2)	1	90-Up	24583EA	N.L.
N.I.	Planet Package, 4 Gear (Isuzu) (4wd) (2)	1	90-Up	24583E	N.L.
N.I.	Planet Package, 4 Gear (Passport) (4wd) (2)	1	90-Up	24583AA	N.L.
214B	Ring Gear, Overdrive Planet	1	90-Up	24590	8-96014-202-0
	(2) Includes 48T Input, 42T Reaction Sun Gear, Ring Gear and Planet				
SUN GEARS					
206B	Sun Gear, Overdrive Planet	1	90-Up	24610	8-96014-199-0
350C	Sun Gear, w/ Inner Race	1	90-Up	24612E	8-96014-073-0
418D	Sun Gear, Rear (46 Teeth)	1	90-Up	24614E	N.L.
ONE WAY CLUTCHES					
146A	Sprag, Overdrive	1	90-Up	54650B	8634049
400D	Sprag, 3rd Clutch (26 Elements)	1	90-Up	74658	8647084
SHELLS & SUPPORTS					
228B	Center Support (Cast # 069 DD2)	1	90-Up	24630	8-96041-121-0
228B	Center Support (Cast # 513 FU2) (w/ 2 Valves Inside)	1	90-Up	24630EB	96015259
VALVE BODIES & GOVERNORS					
556E	Valve Body (w/ 3 Solenoid)	1	90-Up	24740E	8-96015-467-0
CASES/HOUSINGS & COMPONENTS					
564E	Pan, Bottom Rear (3.560" Deep)	1	90-Up	24765EB	N.L.
MISCELLANEOUS COMPONENTS					
138A	Piston, Overrun Clutch (Bonded)	1	90-Up	24960	8-96017-401-0
140A	Spring, Overrun Clutch Return	1	90-Up	24970	8-96014-902-0
154A	Cover, Overdrive Accumulator (Bonded)	1	95-Up	24939	8-96017-093-0
538E	Piston, Low Band Servo	1	90-Up	24907A	N.L.
TECHNICAL MANUALS					
N.I.	Technical Manual	1	90-Up	24400E	83-4L30-E
TOOLS					
N.I.	Servo Bore Tool	1	90-Up	T-9210	N.L.
N.I.	Servo Bore Tool Sleeve	1	90-Up	T-9210-SL	N.L.
N.I.	Pump Alignment Tool	1	90-Up	T-1080-B	N.L.

Notes

SEAL AFTERMARKET™
PRODUCTS



your source for engineered solutions

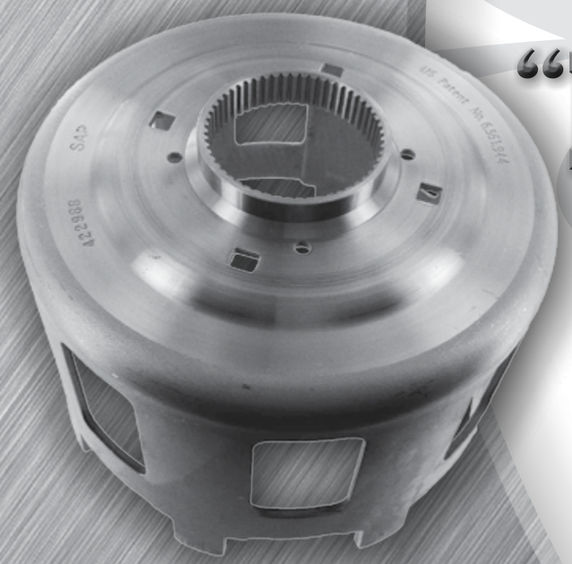

THE "BEAST"

"We think the Beast is a great product and we use a lot of them. We are a large shop and have been in business for 31 years."
John Guerrisky, Aamco Transmission, Williamsport, PA

"We use the Beast exclusively. We don't put any stock shells in any units we rebuild. I've been rebuilding transmissions for 35 years."
Bobby Hinson, B&R Transmissions, Matthews, NC

Accept NO Substitute

PATENT No. 6,561,944

Seal Aftermarket Products LLC
2315 S.W. 32 Ave., Pembroke Park, FL 33023
Phone 954-364-2400 • Toll Free 800-582-2760 • Fax 954-364-2401
www.sealaftermarketproducts.com

TK TOLEDO TRANS-KIT
Parker DISTRIBUTOR
BRYCO

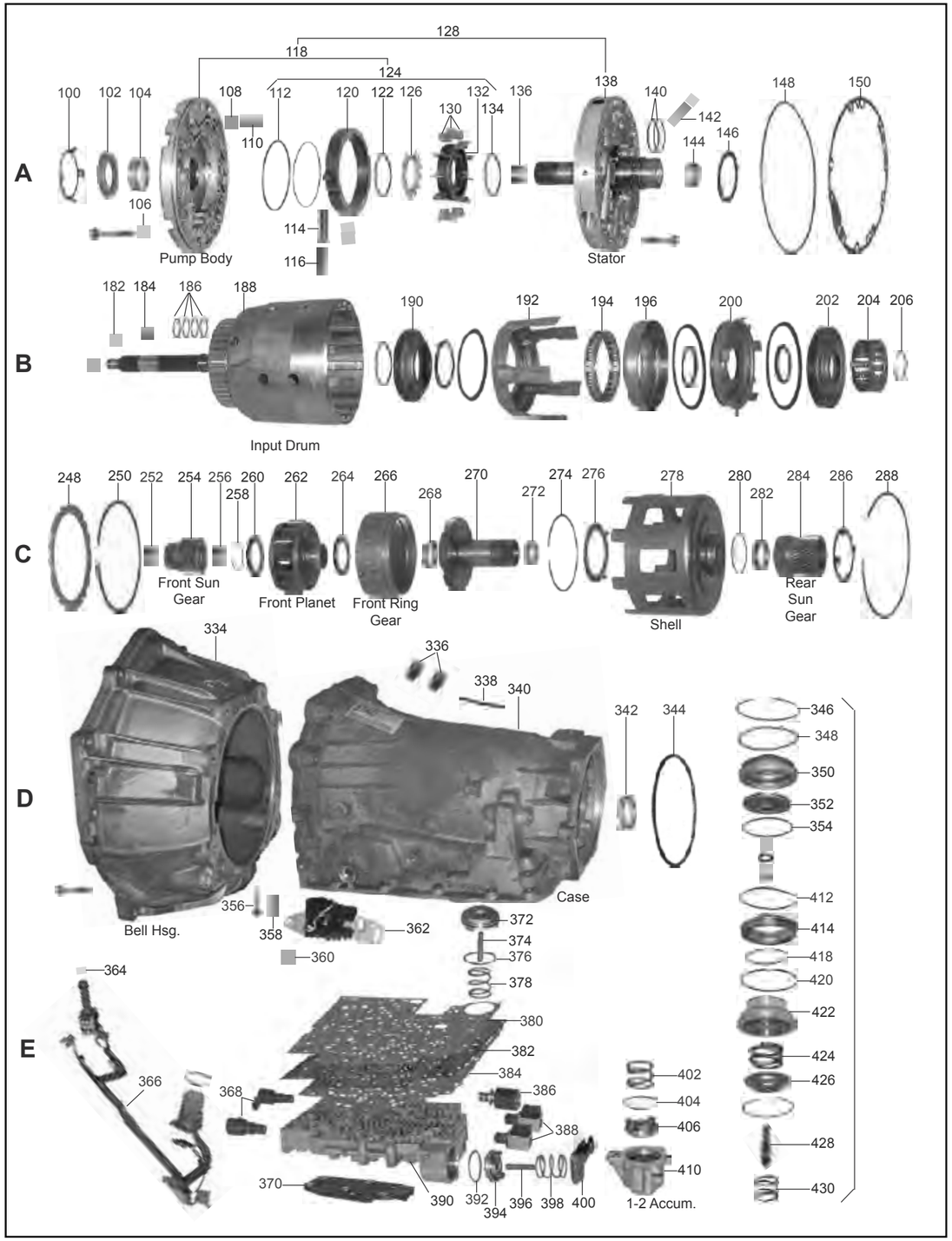
A
B
C
D
E
100 102 104 106 108 110 112 114 116 118 120 122 124 126 128 130 132 134 136 138 140 142 144 146 148 150
Pump Body
Stator
182 184 186 188 190 192 194 196 200 202 204 206
Input Drum
248 250 252 254 256 258 260 262 264 266 268 270 272 274 276 278 280 282 284 286 288
Front Sun Gear
Front Planet
Front Ring Gear
Shell
Rear Sun Gear
334 336 338 340 342 344 346 348 350 352 354 356 358 360 362 364 366 368 370 372 374 376 378 380 382 384 386 388 390 392 394 396 398 400 402 404 406 410 412 414 418 420 422 424 426 428 430
Bell Hsg.
Case
1-2 Accum.

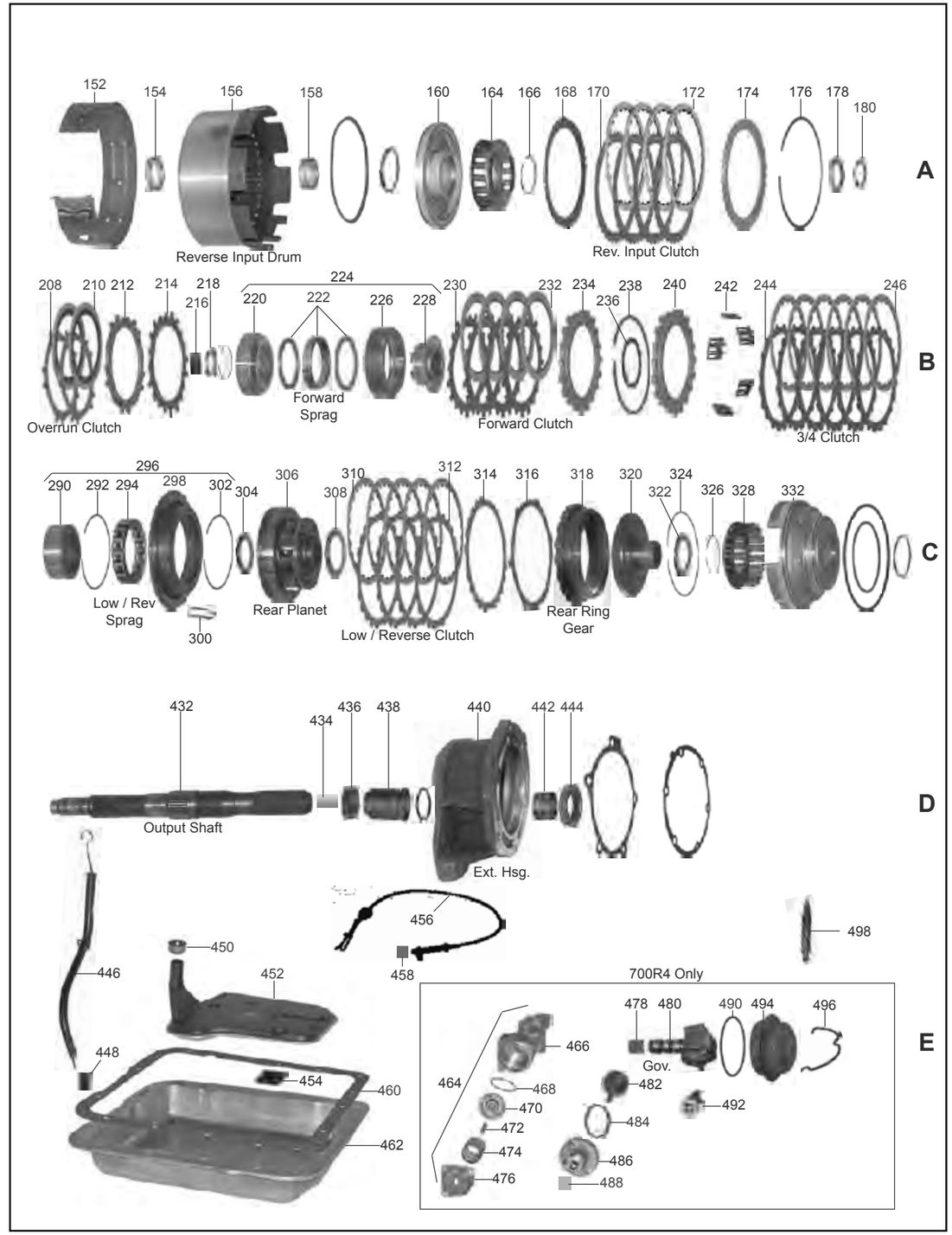
A
B
C
D
E
152 154 156 158 160 164 166 168 170 172 174 176 178 180
Reverse Input Drum
Rev. Input Clutch
208 210 212 214 216 218 220 222 224 226 228 230 232 234 236 238 240 242 244 246
Overrun Clutch
Forward Sprag
Forward Clutch
3/4 Clutch
290 292 294 296 298 300 302 304 306 308 310 312 314 316 318 320 322 324 326 328 332
Low / Rev Sprag
Rear Planet
Low / Reverse Clutch
Rear Ring Gear
432 434 436 438 440 442 444 446 448 450 452 454 456 458 460 462 498
Output Shaft
Ext. Hsg.
700R4 Only
464 466 468 470 472 474 476 478 480 482 484 486 488 490 492 494 496
Gov.

4L60 (700R4), 4L60E, 4L65E, 4L70E

RWD
4 SPEED

ILL.		Qty.	Year	Part #	Ref. #
DELUXE KITS					
N.I.	700-R4	1	82-84	74008	N.L.
N.I.	700-R4	1	85-E87	74008A	N.L.
N.I.	700-R4	1	L87-93	74008B	N.L.
N.I.	4L60E (w/ 3-4 Bonded Piston) (1/5/93-96)	1	93-96	74008EA	N.L.
N.I.	4L60E (w/ Pistons) Shallow Pan	1	97-03	74008EB	N.L.
N.I.	4L60E (w/ Pistons) Deep Pan	1	97-03	74008EC	N.L.
N.I.	4L60E (w/ Pistons) Bonded Pump Seal	1	04-Up	74008ED	N.L.
N.I.	4L65E, 4L70E (w/ Pistons) Bonded Pump Seal	1	01-Up	74008G	N.L.
MASTER OVERHAUL KITS (WITH STEELS)					
N.I.	700-R4	1	82-84	74006	N.L.
N.I.	700-R4	1	85-E87	74006A	N.L.
N.I.	700-R4	1	L87-93	74006B	N.L.
N.I.	4L60E (w/ 3-4 Bonded Piston) (1/5/93-96)	1	L93-96	74006EA	N.L.
N.I.	4L60E (w/ Pistons)	1	97-03	74006EB	N.L.
N.I.	4L60E (w/ Pistons) Bonded Pump Seal	1	04-Up	74006ED	N.L.
N.I.	4L65E, 4L70E (w/ Pistons) Bonded Pump Seal	1	01-Up	74006G	N.L.
MASTER OVERHAUL KITS (LESS STEELS)					
N.I.	700-R4	1	82-84	74004	N.L.
N.I.	700-R4	1	85-E87	74004A	N.L.
N.I.	700-R4	1	L87-93	74004B	N.L.
N.I.	4L60E (w/ 3-4 Bonded Piston) (1/5/93-96)	1	L93-96	74004E	N.L.
N.I.	4L60E (w/ Pistons)	1	97-03	74004EB	N.L.
N.I.	4L60E (w/ Pistons) Bonded Pump Seal	1	04-Up	74004ED	N.L.
N.I.	4L65E, 4L70E (w/ Pistons) Bonded Pump Seal	1	01-Up	74004G	N.L.
OVERHAUL KITS (WI RINGS & SEALS)					
N.I.	700-R4	1	82-93	74002C	N.L.
N.I.	4L60E, 4L65E	1	93-03	74002E	N.L.
N.I.	4L60E, 4L65E, 4L70E (Bonded Pump Seal)	1	04-Up	74002G	N.L.
BONDED PISTONS					
190B	3-4 Clutch (Bonded)	1	93-Up	74960E	24200290
200B	Forward Clutch (Bonded) (Will Retro to 93)	1	97-Up	74964A	24205272
202B	Overrun Clutch (Bonded)	1	97-Up	74969A	24205273
GASKETS & 0-RINGS					
106A	Gasket, Pump Bolt Washer	7	82-E86	44309	8626281
106A	0-Ring, Pump Bolt	7	L86-Up	74312A	8654341
148A	0-Ring, Front Pump	1	82-03	74311	24210605
148A	0-Ring, Front Pump (Molded Seal)	1	04-Up	74311A	24226315
150A	Gasket, Pump	1	L83-Up	74310A	8654143
182B	0-Ring, Input Shaft (Small, 4 & 6 Cyl. Type) (245mm Cony)	1	82-Up	64380	8636033
182B	0-Ring, Input Shaft (Small, V-8 Type) (298mm Cony)	1	82-Up	44380	1672358
344D	Lathe Cut Seal, Case to Extension Housing	1	82-Up	44348	1358899
344D	Lathe Cut Seal, Case to Extension Housing (Split Bell)	1	96-Up	74348E	24203287
348D	0-Ring, Servo Cover (Outer Blue)	1	82-Up	74366A	8647351
354D	0-Ring, Servo Cover (Inner Red)	1	82-Up	74366	8642112
376D	Seal, 1-2 & 3-4 Accumulator (Rubber)	2	82-Up	54352A	8635568
376E	0-Ring, TCC Solenoid	1	82-Up	44380	1672358
380B	0-Ring, Input Shaft (Small, V-8 Type) (300mm Cony)	1	98-Up	74380	24212987
380E	Gasket Kit, Valve Body (4L60E)	1	93-05	74320EK	N.L.
380E	Gasket Kit, Valve Body (4L60E)	1	06-Up	74320EAK	N.L.
380E	Gasket Kit, Valve Body (700-R4)	1	82-Up	74320BK	N.L.
380E	Gasket Kit, Valve Body (For Bonded VB Plates)	1	06-Up	74320GK	N.L.
448E	Boot, Filler Tube	1	82-Up	44371B	1259475
450E	Seal, Filter 4L60E, 4L65E	1	93-Up	74379E	8685775
450E	Seal, Filter 700-R4	1	82-93	74379	8657767
458D	Boot, Detent Cable	1	82-Up	54373B	1262476
460E	Gasket, Pan (Cork)	1	82-Up	74300	8654799
460E	Gasket, Pan (Fiber)	1	82-Up	74300F	8654799
N.I.	External Seal Kit	1	82-Up	74390	N.L.
N.I.	0-Ring, Case Connector, 4L60E, 4L65E	1	93-Up	74347	3198561
N.I.	0-Ring, Case Connector, 700-R4	1	82-93	44369B	6264903
N.I.	0-Ring, Output Shaft Sleeve to Slip Yoke	1	82-Up	44374B	3764601
N.I.	0-Ring, Speed Sensor	1	96-Up	34370	6033448

ILL.		Qty.	Year	Part #	Ref. #
GASKETS & 0-RINGS (Cont.)					
N.I.	0-Ring, Speed-0 Housing (Outer)	1	82-Up	44369A	6264904
N.I.	Seal, Forward Clutch Accumulator Piston	1	93-Up	74352	24206508
METAL CLAD SEALS					
100A	Retainer (Front Seal)	1	82-Up	74089	8654491
102A	Pump	1	82-Up	74070	24202535
360D	Manual Shaft	1	82-Up	44072	23010610
444D	Rear (2wd Exc Corvette)	1	82-Up	44074	3932255
444D	Rear (2wd Exc Corvette) (Triple Lip Vamac)	1	82-Up	74074	24204540
444D	Rear (Colorado, Canyon, 06-Up Hummer)	1	04-Up	108074	97287358
444D	Rear (Corvette)	1	97-Up	74074D	24207010
488E	Speed-0 Shaft	1	82-Up	44078X	1240382
SEALING RINGS & KITS					
N.I.	Sealing Ring Kit (4L60) (w/o Pump Slide Ring)	1	82-Up	74175K	N.L.
N.I.	Sealing Ring Kit (4L60E) (w/o Pump Slide Ring)	1	93-Up	74175BK	8663641
N.I.	Sealing Ring Kit, Servo Piston (Viton D-Rings)	1	82-Up	74175VK	N.L.
112A	Pump Slide to Body (Metal)	1	82-Up	54176B	8634079
140A	Stator (Scarf Cut)	2	82-Up	54179AT	8628055
140A	Stator (Solid) (Teflon)	2	82-Up	74179BT	8681292
186B	Turbine Shaft (Solid) (White)	4	82-Up	74178AT	8667035
186B	Turbine Shaft (Stepped Cut)	4	82-Up	74178BT	8642420
FRICTION PLATES					
172A	Reverse Input (.070")	4	L87-Up	74110A	8673605
172A	Reverse Input (.078")	4	82-E87	74110	8654306
210B	Overrun	2	82-Up	74116	24210766
232B	Forward (.070")	5	85-Up	74108C	24232517
232B	Forward (.080")	5	82-84	74108	8647350
246B	3-4 Clutch (.062") (Commercial) Tan	AR	82-Up	74100C	8654145
246B	3-4 Clutch (.067") (Hi-Energy) (4L65E, 4L70E)	6-7	01-Up	74100D	24216932
246B	3-4 Clutch (.080")	6	82-Up	74100	8654145
246B	3-4 Clutch (.080") (Hi-Energy)	6	82-Up	74100A	24207605
310C	Low Reverse	5	82-Up	74114	8684089
STEEL PLATES					
168A	Reverse Input (.080") (Waved)	1	82-E87	74131A	8647067
168A	Reverse Input (.088") (Dished)	1	L87-Up	74131B	8663074
170A	Reverse Input (.078")	3-4	82-96	74130	8642061
170A	Reverse Input (.078") (Turbulator Plate w/ 4 Holes)	4	97-Up	74130B	24205267
170A	Reverse Input (.090")	AR	82-Up	74130A	N.L.
208B	Overrun	2	82-Up	74136	8642154
208B	Overrun (Kolene)	2	82-Up	74136K	N.L.
214B	Forward (.052") (Waved)	1	82-Up	74129B	8686010
214B	Forward (.070") (Waved)	1	82-Up	74129	8647058
230B	Forward (.078")	4	82-84	74128	8642167
230B	Forward (.090")	4-5	85-Up	74128A	8654325
230B	Forward (.090") (Kolene)	4-5	85-Up	74128AK	N.L.
244B	3-4 Clutch (.060") (20T) (Commercial)	AR	82-E93	74120B	N.L.
244B	3-4 Clutch (.076") (15T)	5	82-E87	74120	8678054
244B	3-4 Clutch (.076") (20T)	5-6	82-E93	74120A	8678053
244B	3-4 Clutch (.076") (20T) (Kolene)	5-6	82-E93	74120AK	N.L.
244B	3-4 Clutch (.095") (4L65E, 4L70E)	6	01-Up	74120D	24216939
244B	3-4 Clutch (.106") (4L60E)	5	L93-Up	74120C	8685045
244B	3-4 Clutch (.106") (4L60E) (Kolene)	5	L93-Up	74120CK	N.L.
312C	Low Reverse (.068")	5	82-96	44134	6261120
312C	Low Reverse (.068") (Kolene)	5	82-96	44134K	N.L.
FRICTION & STEEL KITS					
N.I.	Powerpack, 3-4 Clutch (.062" Tan) (w/ P. Plate, 9 Frictions & 10 Steels)	1	82-Up	74100CK	N.L.
N.I.	Powerpack, 3-4 Clutch (.062" HP Red) (w/ P. Plate, 9 Frict. & 10 Kolene Steels)	1	82-Up	74100DK	N.L.
N.I.	Z Pak, 3-4 Clutch (One Sided Clutch Pack & 2 Press. Plates)	1	82-Up	74100EK	N.L.
N.I.	Steel Module (700-R4)	1	L87-93	74139B	N.L.
N.I.	Steel Module (4L60E) (1/5/93-Up)	1	L93-Up	74139EA	N.L.
N.I.	Steel Module (4L65E)	1	01-Up	74139G	N.L.

ILL.		Qty.	Year	Part #	Ref. #
PRESSURE PLATES					
174A	Pressure Plate, Reverse Input Clutch 6.52-6.68mm	1	L87-Up	74150B	N.L.
212B	Apply Plate, Forward Clutch 4.30mm	1	87-Up	74149B	24212462
234B	Pressure Plate, Forward Clutch 7.70mm	1	87-Up	74148A	8667670
234B	Pressure Plate, Forward Clutch 8.90mm	1	87-Up	74148C	8682868
240B	Apply Plate, 3-4 Clutch (.213") (Flat w/ Tangs)	1	93-Up	74141C	24217451
248C	Backing Plate, 3-4 Clutch (.160")	1	87-Up	74140JC	8685048
248C	Backing Plate, 3-4 Clutch (.193")	1	87-Up	74140JB	24212460
314C	Spacer Plate, Low Reverse Clutch 2.25mm (.089")	1	90-Up	74155B	24205270
314C	Spacer Plate, Low Reverse Clutch 2.41mm (.095")	1	L87-Up	74155C	8667584
FILTERS					
142A	Screen, Pump	1	82-93	74014	8642912
356D	Screen, Governor	1	82-93	74014A	12338044
452E	Filter, 700-R4	1	82-93	74010	8667293
452E	Filter, 4L60E Shallow Pan (Exc 97-Up Corvette)	1	93-Up	74010E	24200796
452E	Filter, 4L60E Shallow Pan (97-Up Corvette)	1	97-Up	74010EA	24208149
452E	Filter, 4L60E Deep Pan (Exc Colorado, Canyon & H3)	1	97-Up	74010EC	24208576
452E	Filter, 4L60E (Colorado & Canyon 4wd 04-Up, H3 06-Up)	1	04-Up	74010ED	N.L.
452E	Filter, 4L60E Auxiliary Pump (PHT - Partial Hybrid)	1	05-07	74010H	N.L.
N.I.	Screen, Shift Solenoid (Valve Body Plate) (Small)	1	93-Up	74016A	24209144
N.I.	Screen, Pressure Control Solenoid (Valve Body Plate) (Large)	1	93-Up	74016P	24209145
N.I.	Screen, TCC Solenoid (in Case)	1	82-97	74014A	12338044
N.I.	Screen, TCC Solenoid (in Solenoid Snout)	1	98-Up	74016B	N.L.
FILTER KITS					
N.I.	Filter Kit, 700-R4 (All - Latest Design)	1	82-93	74011	N.L.
N.I.	Filter Kit, 4L60E Shallow Pan (Exc 97-Up Corvette)	1	93-Up	74011E	N.L.
N.I.	Filter Kit, 4L60E Shallow Pan (97-Up Corvette)	1	97-Up	74011EA	N.L.
N.I.	Filter Kit, 4L60E Deep Pan (Exc Colorado, Canyon & H3)	1	97-Up	74011EC	N.L.
N.I.	Filter Kit, 4L60E Deep Pan (Colorado & Canyon 4wd 04-Up, H3 06-Up)	1	04-Up	74011ED	N.L.
BANDS					
152A	Intermediate	1	82-Up	74020A	8673175
152A	Intermediate (Hi-Energy Lining)	1	82-Up	74020AH	24201131
152A	Intermediate (2.625" Wide) (Hi Perf)	1	82-Up	74020C	N.L.
BUSHINGS					
N.I.	Bushing Kit (w/ Babbitt Pump Bushing)	1	L84-Up	74030	N.L.
N.I.	Bushing Kit (w/ Teflon Coated Pump Bushing)	1	L84-Up	74030E	N.L.
104A	Pump Body (Babbitt)	1	82-Up	74034	8628913
104A	Pump Body (Teflon)	1	82-Up	74034B	24206030
136A	Stator (Front) .900" ID	1	82-E84	54036A	8628915
136A	Stator (Front) 1.000" ID	1	L84-Up	44036B	8641073
144A	Stator (Rear) .468" Wide	1	82-Up	74037A	8682887
144A	Stator (Rear) .510" Wide (Teflon)	1	82-Up	74037T	N.L.
154A	Reverse Drum (Front)	1	82-Up	74046	8642905
154A	Reverse Drum (Rear)	1	82-Up	54046A	8628917
252C	Input Sun Gear	2	82-Up	74052	8642181
268C	Reaction Shaft (Front)	1	82-Up	74054	8642908
272C	Reaction Shaft (Rear)	1	82-Up	74054A	8642907
282C	Rear Sun Gear (.375" Wide)	1	82-Up	74056	8642909
342D	Case (Babbitt)	1	82-Up	44064	6261016
342D	Case (Bronze)	1	82-Up	74064	8680027
442D	Extension Housing (Bronze, Dimpled)	1	82-Up	44066B	6260048
442D	Extension Housing (Teflon Coated)	1	82-Up	74066T	N.L.
THRUST WASHERS / BEARINGS					
THRUST WASHERS					
N.I.	Washer Kit	1	82-Up	74200	N.L.
N.I.	Washer Kit (w/o Selectives)	1	82-Up	74200A	N.L.
146A	Stator To Drum	1	82-Up	74211	12338134
180A	Input Drum (2.04-2.14mm) (# 68)	1	82-Up	74230A	8642068
180A	Input Drum (2.38-2.48mm) (# 70)	1	82-Up	74230C	8642070
180A	Input Drum (2.72-2.82mm) (# 72)	1	82-Up	74230E	8642072
180A	Input Drum (3.06-3.16mm) (# 74)	1	82-Up	74230G	8642074

ILL.		Qty.	Year	Part #	Ref. #
THRUST WASHERS (Cont.)					
236B	Input Carrier to Race (Plastic)	1	82-85	74235	8647095
276C	Reaction Shaft to Shell (Brass)	1	82-01	74241	8642202
276C	Reaction Shell (Beast)	1	82-Up	74241A	8642331
276C	Reaction Shell (Plastic)	1	82-Up	44244A	8642331
286C	Shell Rear (Plastic)	1	82-Up	44244A	8642331
N.I.	Shim, Rear Case (.010")	1	82-Up	44255	N.L.
BEARINGS					
N.I.	Bearing Kit	1	82-06	74201A	N.L.
178A	Bearing, Stator to Input Drum	1	82-Up	74229	8642066
218B	Input Drum to Sun Gear	1	82-Up	74232	8642162
260C	Front Planet to Front Sun Gear (.150" Thick) (Captured)	1	82-98	84247	8646254
260C	Front Planet to Front Sun Gear (.198" Thick) (Captured)	1	99-Up	74247A	N.L.
264C	Front Planet to Reaction Shaft (2.465" OD w/o Lip)	1	82-06	74238	8642191
264C	Front Planet to Reaction Shaft (2.540" OD w/o Lip)	1	01-06	74238A	24217327
264C	Front Planet to Reaction Shaft (w/ Lip)	1	07-Up	74238B	24236092
276C	Reaction Shaft to Shell (4L65E)	1	01-Up	74241B	24217328
308C	Rear Planet to Support	1	82-Up	74251	8642215
322C	Rear Hub to Case	1	82-Up	74238	8642191
ELECTRICAL COMPONENTS					
4L60, 700-R4					
492E	Connector, Case (Universal 2, 3, 4 Prong)	1	82-93	84444U	8662395
N.I.	External Wire Harness Repair Kit, 3 Prong Square	1	82-93	74445A	12085533
N.I.	Solenoid, TCC Universal	1	82-93	54425B	10478100
N.I.	Switch, 3rd - 4th Clutch (2 Button) (Normally Open)	1	82-93	64412	8643710
N.I.	Switch, 4-3 Pulse (2 Prong) (Normally Closed)	1	82-93	74411A	8642346
N.I.	Switch, GM Non Grounding Governor Lock-Up Delay	1	82-93	44416G	N.L.
N.I.	Switch, TCC Signal (1 Prong) (Normally Open)	1	82-93	74411B	8642473
4L60E, 4L65E, 4L70E					
362D	Switch, MLP Sensor (PRNDL) (4L60E) (7 Pin & 4 Pin Connector)	1	95-03	74410A	24229422
362D	Switch, MLP Sensor (PRNDL) (4L65E) (11 Pin Connector)	1	04-Up	74410B	24221125
366E	Solenoid, TCC & Wire Harness (3-2 On-Off)	1	96-02	74425S	12163408
366E	Solenoid, TCC & Wire Harness (Input Sensor Design - Pump)	1	06-Up	74425NE	24234121
366E	Solenoid, TCC & Wire Harness (Internal Mode)	1	09-Up	74425NF	24237980
366E	Solenoid, TCC & Wire Harness (PWM TCC & 3-2)	1	93-95	74425Q	24241214
366E	Solenoid, TCC & Wire Harness (Square EPC Connector)	1	03-06	74425ND	24222891
368E	Solenoid (3-2 Down Shift) (On-Off) (White Connector)	1	96-Up	74418EA	24209121
368E	Solenoid (3-2 Down Shift) (PWM) (Gray Connector)	1	93-95	74418E	24227747
370E	Switch, Manifold Pressure	1	94-Up	74442	24215111
386E	Repair Kit, EPC Solenoid w/ Tool Kit (Transgo) 4 Repairs in One Kit	1	93-Up	T34435RK	N.L.
386E	Solenoid, EPC (1.5" Black Can)	1	93-02	34435A	24209276
386E	Solenoid, EPC (1.5" Silver Can)	1	03-Up	34435B	24230632
388E	Solenoid, 1-2 & 2-3 Shift	2	93-Up	74421	10478120
N.I.	Solenoid, TCC (Pump) Universal	1	93-Up	54425B	10478100
N.I.	Solenoid, TCC (PWM)	1	93-Up	74418E	24227747
N.I.	Repair Kit, External Wire Harness (Solenoid)	1	93-98	74445GK	N.L.
N.I.	Repair Kit, Internal Wire Harness (Solenoid)	1	93-98	74446GK	N.L.
N.I.	Repair Kit, PRNDL Harness	1	95-08	74446K	15305887
N.I.	Repair Kit, Speed Sensor Connector	1	95-Up	74446CK	N.L.
N.I.	Sensor Plug, ISS (Dummy) (4L70E)	1	05-Up	74509J	24234175
N.I.	Sensor, Input (Pump)	1	06-Up	74438G	24237866
N.I.	Sensor, Vehicle Speed (VSS) (Also 96 Corvette)	1	93-E96	74436	8673299
N.I.	Sensor, Vehicle Speed (VSS) (Exc 96 Corvette)	1	L96-Up	74436A	10456520
N.I.	Switch, Internal Mode (IMS) (4L70E)	1	09-Up	74410D	24248867
VALVE BODY RECALIBRATION KITS					
N.I.	Shift Kit, 700-R4 (Transgo)	1	82-93	T74165	N.L.
N.I.	Shift Kit JR, 700-R4 (Junior) (Transgo)	1	86-93	T74167	N.L.
N.I.	Shift Kit, 4L60E (Transgo)	1	93-08	T74165E	N.L.
N.I.	Reprogramming Kit™, 700-R4 Hi-Pert & HD Auto or Manual Shift (Transgo)	1	82-93	T74171	N.L.
N.I.	Reprogramming Kit™, 4L60E Hi-Pert HD & Sport Truck (Transgo)	1	93-Up	T74171E	N.L.
N.I.	Reprogramming Kit™, 4L60E Racing, Manual Shift Only (Transgo)	1	93-Up	T74173E	N.L.
N.I.	Shift Correction Package, 700-R4 (Superior)	1	82-93	S74165	N.L.
N.I.	Shift Correction Package, 4L60E (Exc 98-Up w/ EC3) (Superior)	1	93-97	S74165E	N.L.

ILL.		Qty.	Year	Part #	Ref. #
VALVE BODY RECALIBRATION KITS (Cont.)					
N.I.	Shift Correction Package, 4L60E (98-Up w/ EC3) (Superior)	1	98-Up	S74165EA	N.L.
VALVE BODY COMPONENTS					
N.I.	Piston, Forward Clutch Accum, 4L60E (Aluminum)	1	93-Up	74741G	8686017
N.I.	Pump Ring Kit, NoYoYo, Hi-Pert *Engines Over 5500 RPM (Transgo)	1	82-Up	T74165HP	N.L.
N.I.	Sleeve, Boost Valve Plunger in Valve Body, 700-R4 (Superior)	1	82-93	74741B	N.L.
N.I.	Spring, Anti-Stick Throttle Valve Spring, 700-R4	1	82-93	74741N-3	8642375
N.I.	Vacuum / Boost Valve Bypass Kit, 4L60E (Transgo)	1	93-Up	T34161E	N.L.
N.I.	Vacuum Pressure Control Kits, 4L60E (Transgo)	1	93-Up	T74431A	N.L.
N.I.	Valve Kit, TCC Upgrade For SRTA Rebuilt Valve Bodies, 4L60E	1	95-Up	T74741CK	N.L.
N.I.	Valve, TCC Replacement to Fix P1870, 4L60E	1	95-00	A74741QB	N.L.
N.I.	Valve, TCC Replacement to Fix P1870, 4L60E	1	01-Up	A74741QC	N.L.
N.I.	Valve, TCC Shift (700-R4)	1	82-93	74741CS-1	N.L.
VALVE BODY SEPARATOR PLATES					
382E	700-R4 (Universal) (Transgo)	1	82-93	74747U	N.L.
382E	4L60E (JV to LE) (Transgo)	1	93-94	74747EA	N.L.
382E	4L60E (MP to NH) (Transgo)	1	1995	74747EB	N.L.
382E	4L60E (PA to TA) (Exc 05 Corvette) (Transgo)	1	96-06	74747EC	N.L.
382E	4L60E (2005 Corvette) (Transgo)	1	2005	74747ED	N.L.
382E	4L60E, 4L65E, 4L70E (Exc Hybrid) (Transgo)	1	07-08	74747EF	N.L.
382E	4L60E, 4L65E, 4L70E (Exc Hybrid) (Transgo)	1	2009	74747EG	N.L.
PUMPS					
128A	Pump (700-R4) (1.00" Input Shaft) (Non Auxiliary Type)	1	84-86	74500A	8667080
128A	Pump (700-R4) (Auxiliary Valve Body Type)	1	87-93	74500B	N.L.
128A	Pump (4L60E) (Non PWM, No Lip)	1	93-94	74500C	N.L.
128A	Pump (4L60E) (PWM, No Lip) (298mm TC) (Pump 0-Ring)	1	95-03	74500D	N.L.
128A	Pump (4L60E) (PWM, w/ Lip) (298mm TC) (Pump 0-Ring)	1	96-03	74500DA	N.L.
128A	Pump (4L60E) (PWM, w/ Lip) (300mm TC) (Pump 0-Ring)	1	96-03	74500G	24224507
128A	Pump (4L60E/65E) (298mm TC) (Molded Seal) (Non ISS)	1	04-05	74500H	24203111
128A	Pump (4L60E/65E) (300mm TC) (Molded Seal) (Non ISS)	1	04-05	74500HA	N.L.
128A	Pump (4L70E) (298mm) (ISS Hole)	1	06-Up	74500JA	N.L.
128A	Pump (4L70E) (300mm) (ISS Hole)	1	06-Up	74500J	N.L.
128A	Pump, Auxiliary Internal Electric (In Pan) (M33 Start-Stop Feature)	1	04-Up	74508	24231437
PUMPS COMPONENTS					
110A	Pivot Pin, Pump Slide	1	82-Up	54535B	8634097
112A	Ring, Slide to Body (Metal)	1	82-Up	54176B	8634079
120A	Pump Slide, 10 Vane (.7074")	1	82-96	54534B	24208304
120A	Pump Slide, 13 Vane (17.955mm)	1	97-Up	74534C	24205405
120A	Pump Slide, 13 Vane (17.968mm)	1	97-02	74534CA	24205406
124A	Rotor Kit (10 Vane) (.7074")	1	82-96	74531AA	8649952
124A	Rotor Kit (10 Vane) (.7074") (Rotor, Guide, 0-Ring, Rings, Vanes, Slide)	1	86-96	74531AK	N.L.
124A	Rotor Kit (13 Vane) (.7074") (Rotor, Guide, 0-Ring, Rings, Vanes, Slide)	1	97-Up	74531CK	24219538
124A	Rotor Kit (13 Vane) (.7075")	1	97-Up	74531CA	24219539
126A	Rotor Guide, 10 Vane	1	86-96	54539BA	12337830
126A	Rotor Guide, 13 Vane (4L60E)	1	97-Up	74539C	24205410
130A	Vane Kit (Package of 10)	1	86-96	74533K	8631280
130A	Vane Kit (Package of 13)	1	97-Up	74533BK	8631280
130A	Vanes	7-13	82-Up	64533	8631280
132A	Rotor, 10 Vane (.7074")	1	86-96	54532BA	8654389
132A	Rotor, 13 Vane (.7074")	1	97-Up	74532C	24205400
134A	Vane Ring, Black (Special Alloy)	2	82-96	54538BS	24201144
134A	Vane Ring, Silver (Special Alloy)	2	97-Up	74538C	24201144
N.I.	ISS Hole Plug (Pumps w/ ISS Design)	1	06-Up	74509J	24234175
N.I.	Spring Kit, Pump Slide (Inner & Outer Springs)	1	82-Up	74536K	N.L.
N.I.	Spring, Pressure Regulator (Outer), 4L60E	1	93-Up	74507MB	8680682
N.I.	Spring, Pressure Regulator, 700-R4 (1.94" Long) (Pink Code - Diesel)	1	82-93	74507MA	8642751
N.I.	Spring, Pressure Regulator, 700-R4 (2.180" Long)	1	82-93	54507P-3	8634490
N.I.	Spring, Pump Slide Pivot Pin (700-R4, 4L60E)	1	82-Up	54540B	8634098
N.I.	Stator Shaft Tube (6.75", 245mm & 298mm) (4L60, 4L60E)	1	82-05	74529B	N.L.
N.I.	Stator Shaft Tube (6.75", 245mm & 298mm) (4L70E)	1	06-Up	74529D	N.L.
N.I.	Stator Shaft Tube (7.25", 300mm Converter) (4L60E)	1	96-05	74529C	N.L.
N.I.	Stator Shaft Tube (7.25", 300mm Converter) (4L70E)	1	06-Up	74529E	N.L.
N.I.	Valve Kit, Boost (TV/Rev) Aluminum, 4L60E, 4L65E (.500", 1.90" Long)	1	93-05	74507TEK	24224511
N.I.	Valve Kit, Boost, 700-R4 (.500" Dia. Valve)	1	82-93	74507J	8634941

ILL.		Qty.	Year	Part #	Ref. #
PUMPS COMPONENTS (Cont.)					
N.I.	Valve Kit, Boost, Aluminum, 4L60E (.422", 1.80" Long) (OEM)	1	06-Up	74507FE	24234396
N.I.	Valve Kit, Boost, Aluminum, 4L60E (.471", 1.90" Long) (OEM)	1	93-05	74507FD	24224510
N.I.	Valve Kit, Boost, Aluminum, 4L60E (.506", 1.80" Long) (OEM)	1	06-Up	74507TDK	24234397
N.I.	Valve Kit, Reverse Boost, 700-R4 (.283"0D)	1	82-93	74507RBK	8648958
N.I.	Valve Kit, Reverse Boost, 700-R4 (.296"0D)	1	82-93	74507RGK	8648959
N.I.	Valve Kit, Reverse Boost, 700-R4 (.300" OD)	1	82-93	74507RAK	N.L.
N.I.	Valve Kit, TV Boost (.471" Bore Diameter, "Factory" Style) (4L60)	1	82-93	74507JA	8634940
N.I.	Valve, Pressure Regulator, 4L60E	1	93-Up	74507PE-1	8684049
N.I.	Valve, Pressure Regulator, 700-R4 (w/ 2 Flats)	1	82-93	74507B	8684048
DRUMS & COMPONENTS					
156A	Reverse Input Drum (No Check Ball) (Large Feed Hole)	1	L87-Up	74556B	8681295
160A	Piston, Reverse Input Clutch (Aluminum, 3 Clutch)	1	L87-96	74966A	8663071
188B	Input Drum & Shaft w/ Pilot (298mm, 30 Spline TC) (w/o Reluctor)	1	87-Up	74554DA	8654156
188B	Input Drum & Shaft w/o Pilot (245mm, 27 Spline TC) (w/ Reluctor) (4L70E)	1	06-Up	74554J	24242329
188B	Input Drum & Shaft w/o Pilot (245mm, 27 Spline TC) (w/o Reluctor)	1	87-Up	74554E	8667661
188B	Input Drum & Shaft w/o Pilot (298mm, 30 Spline TC) (4L70E)	1	05-Up	74554DC	24235419
188B	Input Drum & Shaft w/o Pilot (300mm, 30 Spline TC) (w/ Reluctor)	1	06-Up	74554GA	24230654
188B	Input Drum & Shaft w/o Pilot (300mm, 30 Spline TC) (w/o Reluctor)	1	98-05	74554G	17803687
190B	Piston, 3-4 Clutch (Bonded)	1	93-Up	74960E	24200290
196B	Piston Housing, Forward Clutch	1	82-Up	74963	8654326
200B	Piston & Retainer Kit, Forward Clutch	1	82-93	74964K	24209542
200B	Piston, Forward Clutch (Bonded) (Will Retro to 93)	1	97-Up	74964A	24205272
202B	Piston, Overrun Clutch (Bonded)	1	97-Up	74969A	24205273
332C	Piston, Low Reverse Clutch, 4L60E	1	87-Up	74967E	8685549
N.I.	Drum Saver Kit, Reverse Input	1	L87-02	74854K	N.L.
PLANETS & COMPONENTS					
262C	Planet, Front (4 Gear)	1	82-06	74582A	24243875
262C	Planet, Front (5 Gear)	1	82-06	74582C	24218063
262C	Planet, Front (5 Gear)	1	07-Up	74582D	24241248
266C	Ring Gear, Front	1	82-Up	74592B	N.L.
270C	Hub w/ Shaft, Front (Bearing Type)	1	01-06	74602A	24243878
270C	Hub w/ Shaft, Front (Bearing Type) (4L70E)	1	07-Up	74602B	24241255
270C	Hub w/ Shaft, Front (Washer Type)	1	82-06	74602	8681518
306C	Planet, Rear (4 Gear)	1	82-Up	74584	N.L.
306C	Planet, Rear (4 Gear) (w/ Oil Slinger)	1	82-Up	74584A	8654200
306C	Planet, Rear (5 Gear)	1	01-Up	74584C	24218069
318C	Ring Gear w/ Hub, Rear (700-R4, 4L60E)	1	82-Up	74594A	8667055
320C	Hub, Rear Internal Reaction Gear (Oil Slinger Design)	1	82-Up	74604A	8677274
SUN GEARS					
254C	Input	1	82-Up	74612A	24213007
284C	Reaction (Rear)	1	82-Up	74614	8642204
ONE WAY CLUTCHES					
222B	Sprag, Forward Clutch	1	L82-86	74658	8647084
222B	Sprag, Forward Clutch (Metal Cage)	1	87-Up	74658B	N.L.
222B	Sprag, Forward Clutch (Plastic Cage)	1	87-Up	74658D	N.L.
224B	Sprag Assembly, Forward Clutch	1	87-Up	74648C	24241477
294C	Roller Clutch, Low Reverse (Narrow)	1	82-86	44654	6261305
294C	Roller Clutch, Low Reverse (Wide)	1	87-Up	74654A	8673544
SHELLS & SUPPORTS					
278C	Shell, Reaction Sun (Washer Type w/ 4 Washer Holes)	1	82-Up	74624	24228345
278C	Shell, Reaction Sun (Bearing Type, No Washer Holes)	1	01-Up	74624D	24229825
278C	Shell, Reaction Sun (Aftermarket) (Works on Both Bearing & Washer Type)	1	82-Up	74624AD	N.L.
278C	Shell, Reaction Sun (The Beast)	1	82-Up	74624A	N.L.
296C	Center Support Assembly (Narrow Sprag Type)	1	82-85	44631	N.L.
296C	Center Support Assembly (Wide Sprag Type)	1	86-Up	74631A	8681727
300C	Clip, Low Reverse (Anti-Clunk Spring)	1	82-Up	74639	6261415
SHAFTS					
432D	Output Shaft, 700-R4 13.250" Long (4wd, 2.8L)	1	82-93	74678B	8654060
432D	Output Shaft, 700-R4 13.750" Long (4wd Exc 2.8L)	1	82-93	74678C	8681812
432D	Output Shaft, 4L60E, 4L65E 13.250" Long (4wd)	1	93-Up	74678BA	N.L.
432D	Output Shaft, 4L60E, 4L65E 18.250" Long	1	93-Up	74678AA	N.L.

ILL.		Qty.	Year	Part #	Ref. #
VALVE BODIES & GOVERNORS					
390E	Valve Body (Auxiliary) 700-R4	1	L87-92	74740H	N.L.
390E	Valve Body (Auxiliary) 700-R4	1	1993	74740HA	N.L.
390E	Valve Body (Non PWM) (4L60E)	1	93-94	74740N	N.L.
390E	Valve Body (PWM)	1	1995	74740NA	N.L.
390E	Valve Body (PWM) (On/Off)	1	96-E00	74740PA	N.L.
390E	Valve Body	1	L00-02	74740PAA	N.L.
390E	Valve Body	1	03-08	74740PB	N.L.
480E	Governor, w/ .108" Square Weight (Gas 8 Cyl)	1	82-93	74680A	8642730
480E	Governor, w/ .158" Square Weight (Gas 6 & 8 Cyl)	1	82-93	74680	8642731
480E	Governor, w/ .180" Square Weight (Diesel)	1	82-93	74680B	8642729
478E	Gear, Governor Gear Kit	1	82-93	74684	8663995
494E	Cover, Governor	1	82-93	44686	8667827
CASES / HOUSINGS & COMPONENTS					
334D	Bell Housing, Cast 24200877 (4L60E)	1	96-97	74750A	24200877
334D	Bell Housing, Cast 24206759 (4L60E) (Starter at 8:30)	1	98-Up	74750	24206759
334D	Bell Housing, Cast 24206952 (4L60E) (Starter at 8:00) (7 Bolts to Engine)	1	98-Up	74750D	24206952
334D	Bell Housing, Cast 24209836 (4L60E) (Starter at 1:00, 5-1/2" Top Bolts)	1	98-Up	74750C	24209836
334D	Bell Housing, Cast 24220855 (4L60E) (Starter at 2:00, 5-1/2" Top Bolts)	1	98-Up	74750B	24220855
340D	Case (1 Piece) (2wd) (All V-8) (w/ PRNDL Switch Hole)	1	93-96	74760GA	N.L.
340D	Case (1 Piece) (4wd) (All V-8) (w/ PRNDL Switch Hole)	1	93-96	74760HA	N.L.
340D	Case, 700-R4 (2wd) (Exc 2.8L) (Aux. Type)	1	L87-91	74760C	N.L.
340D	Case, 700-R4 (4wd) (Exc 2.8L) (Aux. Type)	1	L87-91	74760E	N.L.
440D	Extension Housing (2 Bolt Bottom Mount) 7.250" Long	1	93-95	74770	8673406
440D	Extension Housing (2 Bolt Bottom Mount) 9.625" Long	1	96-97	74770H	24214691
440D	Extension Housing (6 Bolt Bottom Mount) 4.375" Long	1	93-Up	74770JA	N.L.
440D	Extension Housing (6 Bolt Bottom Mount) 5" Long	1	93-Up	74770JB	N.L.
440D	Extension Housing (No Mount or Bracket) Has Speed Sensor	1	96-97	74770F	N.L.
440D	Extension Housing 2wd	1	82-95	74770	8673406
462E	Pan	1	82-96	74765	8667545
462E	Pan (Trucks & Vans)	1	97-Up	74765A	N.L.
N.I.	Case Fix, Center Support, Wide Sprag Type	1	82-Up	74761DA	N.L.
N.I.	Case Fix, Center Support, Wide Sprag Type All Years	1	93-Up	74761D	N.L.
N.I.	Housing w/ Seals, 700-R4 w/ 34-39T Speedo Driven Gear (Aluminum)	1	82-93	44774BA	1247266
N.I.	Housing w/ Seals, 700-R4 w/ 40-43T Speedo Driven Gear (Aluminum)	1	82-93	44774BM	N.L.
SNAP RINGS					
250C	3-4 Backing Plate (.062")	1	82-Up	74861A	N.L.
250C	3-4 Backing Plate (.092")	1	82-Up	74861	8663636
258C	Front Planet / Output Shaft	1	82-Up	74894	8654141
280C	Reaction Sun Gear	1	82-Up	74888	8681553
324C	Hub / Rear Ring Gear	1	82-Up	74889	8642220
326C	Low Reverse Spring Retainer	1	82-Up	74886	8647337
MISCELLANEOUS COMPONENTS					
336D	Cooler Line Fitting (3/8") (Screw In) (4L60E)	2	91-Up	74996R	N.L.
336D	Cooler Line Fitting (Connector - Clip) (4L60E)	2	96-Up	74996B	24205102
336D	Cooler Line Fitting w/ Ball (4L60E)	2	96-Up	74996A	24213958
336D	Cooler Line Fitting, 5/16"	2	82-95	74996	8637742
336D	Cooler Line Fitting, 5/16" x 1/4"	2	82-95	M462C	N.L.
374D	Pin, 3-4 Accumulator (.310" Pin Dia)	1	82-Up	74938	8628273
428D	Pin, 2nd Apply (Extendo) 4L60E	1	93-Up	74908E	N.L.
428D	Pin, 2nd Apply (Extendo) 700-R4	1	82-93	74908	N.L.
N.I.	Bolt Kit, Bell Housing to Case, 4L60E (Package of 8 Bolts)	1	93-Up	74776AK	N.L.
N.I.	Bolt, Bell Housing to Case, 4L60E	1	93-Up	M464GM	24233360
N.I.	Capsule w/ Check Ball, 3-4 Accumulator (Fits In Case)	1	87-Up	74480D	8634400
N.I.	Capsule w/ Check Ball, Input	1	82-Up	74480	8685839
N.I.	Capsule w/ Check Ball, Low Reverse Piston (Case)	1	82-Up	74482C	8663890
N.I.	Clip, Speed-0 Drive Gear	1	82-93	74688	6261781
N.I.	Cup Plug, Park Pawl Shaft	1	82-Up	54483A	8620318
N.I.	Drain Plug, Pan (4L60E)	1	93-Up	74765-6	24233099
N.I.	Piston Kit (Smallest Dia.) (Incl 2nd Apply Piston)	1	82-Up	74905BK	8642079
N.I.	Release Spring Assembly, 3-4 Clutch Load	5	87-Up	74970	8667424
N.I.	Spring Kit, Servo Return (3 Springs) (Superior)	1	82-Up	74901	N.L.
N.I.	Spring, Auxiliary Valve Body (Brown)	1	87-93	74931A	8667047

ILL.		Qty.	Year	Part #	Ref. #
SERVOS & ACCUMULATORS					
402E	Spring, 1-2 Accumulator (Green) Outer	1	82-Up	74926E	8654554
402E	Spring, 1-2 Accumulator (Orange) Inner, 4L60E	1	93-Up	74926AA	8685655
402E	Spring, 1-2 Accumulator (Orange, Cone Shaped) Outer	1	82-Up	74926A	8663385
402E	Spring, 1-2 Accumulator (Red) Outer	1	82-Up	74926D	8634703
402E	Spring, 1-2 Accumulator (White) Inner, 4L60E	1	93-Up	74926BA	8684570
402E	Spring, 1-2 Accumulator (White) Outer	1	82-Up	74926H	8654183
410E	Cover, 1-2 Accumulator	1	01-Up	74929C	N.L.
410E	Cover, 1-2 Accumulator (.230" Dia.)	1	94-01	74929B	8686084
410E	Cover, 1-2 Accumulator, 700-R4	1	82-93	74929	8683543
414E	Inner Housing, Servo (2nd) (4L70E)	1	06-Up	74907D	24229157
N.I.	Piston Kit, 1-2 & 3-4 Accumulator Piston (.310" Pin Dia)	1	82-Up	74927K	8635909
N.I.	Piston Kit, 1-2 Accumulator Piston (.230" Pin Dia)	1	93-Up	74927BK	N.L.
N.I.	Piston, 1-2 & 3-4 Accumulator (.310" Pin Dia)	2	82-Up	74927	8633567
N.I.	Piston, 1-2 Accumulator (.230" Pin Dia)	1	93-Up	74927B	8684429
N.I.	Piston, Servo 2nd Apply (Cast # 24229159) (4L70E)	1	06-Up	74905D	24230441
TECHNICAL MANUALS					
N.I.	700-R4	1	82-86	74400	N.L.
N.I.	700-R4	1	87-91	74400A	N.L.
N.I.	700-R4, Update	1	87-88	74400H	N.L.
N.I.	4L60E	1	93-Up	74400E	N.L.
N.I.	4L60E, Update	1	93-Up	74400EA	N.L.
N.I.	Code Manual, 4L60E	1	93-Up	34400EC	N.L.
TOOLS					
N.I.	Stator Shaft Teflon Seal Installer / Resizer	1	82-Up	T-1503	N.L.
N.I.	Overrun Clutch Inner Lip Seal Installer	1	82-Up	T-1527	N.L.
N.I.	Forward Clutch Inner Lip Seal Installer	1	82-Up	T-1528	N.L.
N.I.	Torx Bit, Bell Housing Bolt, T50+ (4L60E)	1	93-Up	T-1550	N.L.
N.I.	Torx Bit, 2nd Design Bell Housing Bolt Spiral Driver (4L60E, 4L70E)	1	93-Up	T-1550A	N.L.
N.I.	Intermediate Band Apply Pin Gauge	1	82-Up	T-1561	N.L.
N.I.	Front Pump Spring Loader Tool	1	82-Up	T-1703	N.L.
N.I.	2-4 Servo Cover Depressor (For Use With Pan On)	1	82-Up	T-1735	N.L.
N.I.	Electronic Connector Remover	1	82-Up	T-TGM-HR	N.L.

Notes

A

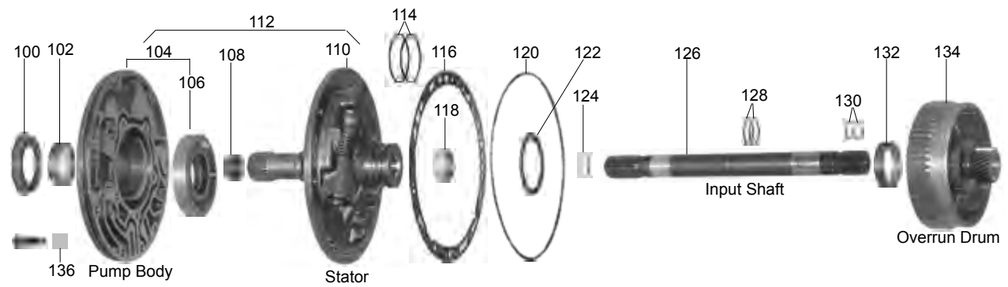
100
102
104
106
108
110
112
114
116
118
120
122
124
126
128
130
132
134
136
Pump Body
Stator
Input Shaft
Overrun Drum

B

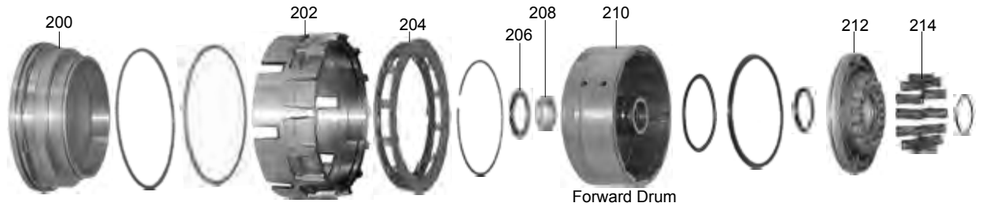
200
202
204
206
208
210
212
214
Forward Drum

C

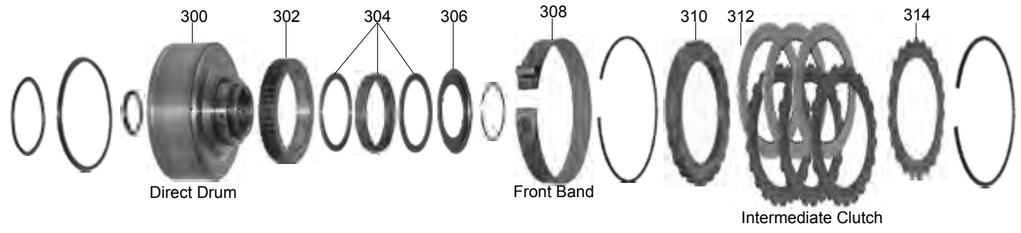
300
302
304
306
308
310
312
314
Direct Drum
Front Band
Intermediate Clutch

D

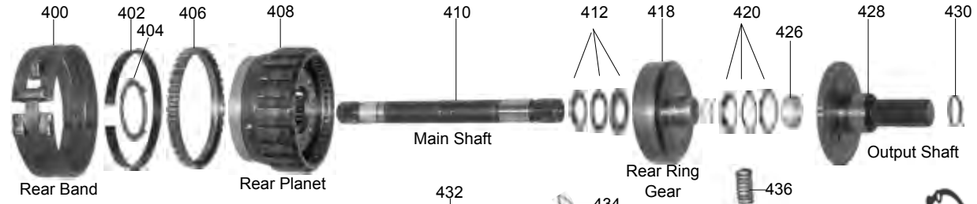
400
402
404
406
408
410
412
418
420
426
428
430
Rear Band
Rear Planet
Main Shaft
Rear Ring Gear
Output Shaft

E

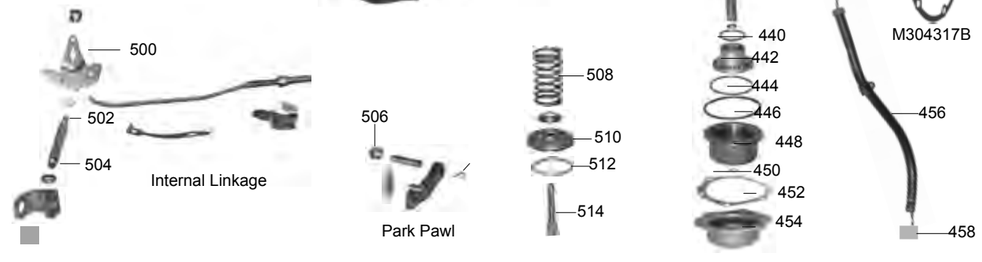
500
502
504
Internal Linkage
506
Park Pawl
508
510
512
514
432
434
436
438
440
442
444
446
448
450
452
454
M304317B
456
458

A

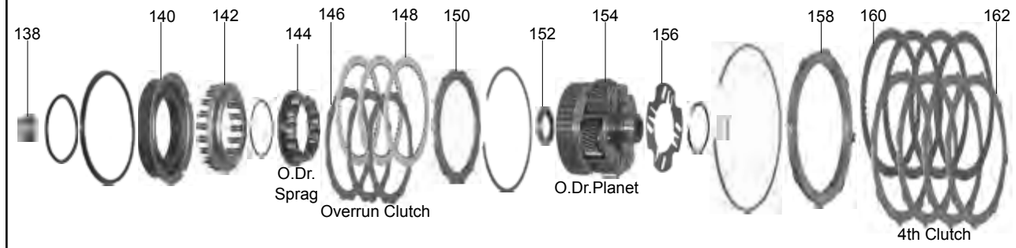
138
140
142
144
146
148
150
152
154
156
158
160
162
O.Dr.
Sprag
Overrun Clutch
O.Dr.Planet
4th Clutch

B

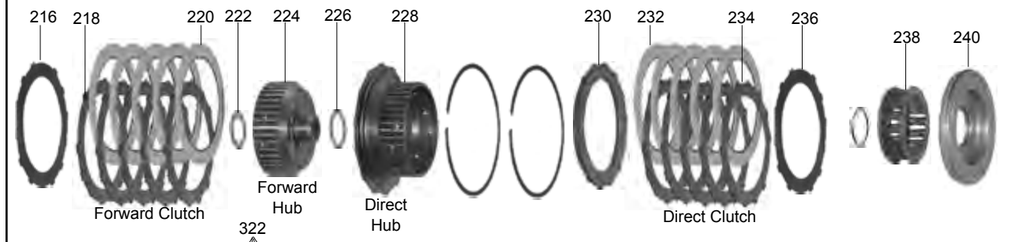
216
218
220
222
224
226
228
230
232
234
236
238
240
Forward Clutch
Forward
Hub
Direct
Hub
Direct Clutch

C

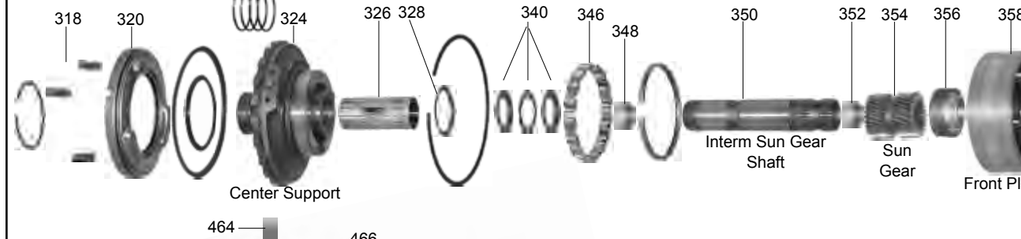
318
320
322
324
326
328
340
346
348
350
352
354
356
358
Center Support
Interm Sun Gear
Shaft
Sun
Gear
Front Planet

D

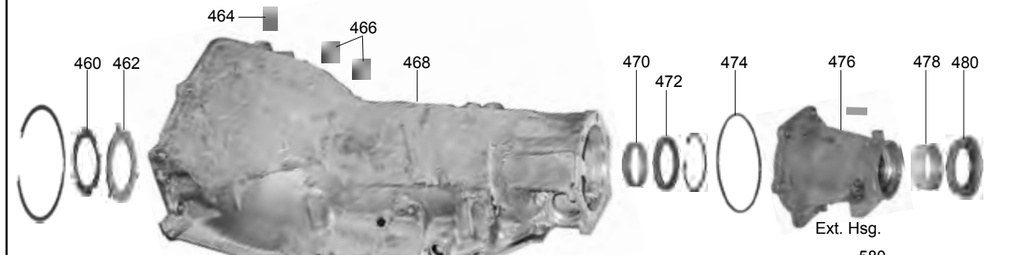
460
462
464
466
468
470
472
474
476
478
480
Case
Ext. Hsg.

E

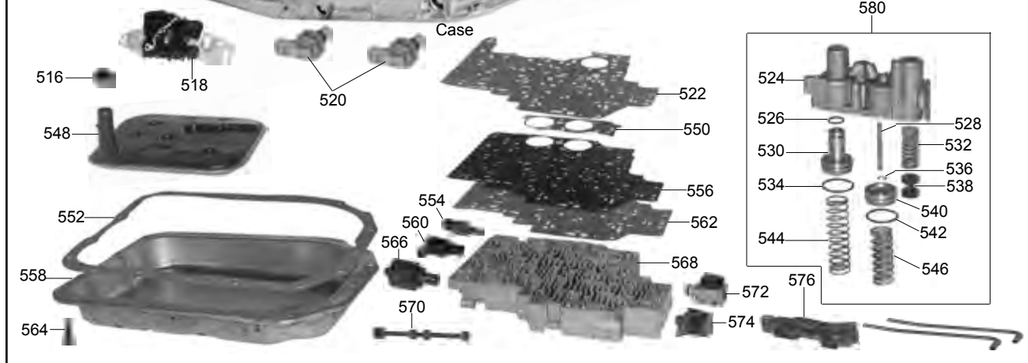
516
518
520
522
524
526
528
530
532
534
536
538
540
542
544
546
548
550
552
554
556
558
560
562
564
566
568
570
572
574
576
580

ILL.		Qty.	Year	Part #	Ref. #
MASTER OVERHAUL KITS (WITH STEELS)					
N.I.	4L80E (w/ Bonded Pistons)	1	91-96	34006EX	N.L.
N.I.	4L80E (w/ Bonded Pistons)	1	97-Up	34006EBX	N.L.
MASTER OVERHAUL KITS (LESS STEELS)					
N.I.	4L80E (w/ Bonded Pistons)	1	91-96	34004EX	N.L.
N.I.	4L80E (w/ Bonded Pistons)	1	97-Up	34004EBX	N.L.
OVERHAUL KITS (WITH RINGS AND SEALS)					
N.I.	4L80E (w/o Bonded Pistons)	1	91-Up	34002EX	N.L.
N.I.	4L80E (w/o Bonded Pistons)	1	97-Up	34002EAX	N.L.
BONDED PISTONS					
N.I.	Piston Kit	1	91-Up	34960A	N.L.
140A	Overrun Clutch (Bonded)	1	91-Up	34960E	24202092
212B	Forward Clutch (Bonded)	1	97-Up	34964EA	24204957
N.I.	Bonded Sleeve, Forward (Inner) (.086" Orifice)	1	97-Up	34334D	24207501
240B	Direct Clutch (Bonded)	1	97-Up	34965G	24204961
GASKETS & O-RINGS					
116A	Gasket, Pump Cover to Case	1	91-Up	34310E	8677782
120A	O-Ring, Front Pump	1	91-Up	74311	24210605
124A	O-Ring, Lock-Up Input Shaft (Turbine Shaft)	1	91-Up	34380E	8661760
136A	Seal, Pump Bolt	7	91-Up	34312E	8655281
452D	Gasket, Rear Servo Cover	1	91-Up	34307A	8675728
458D	Boot, Filler Tube	1	91-Up	44371B	1259475
474D	Seal, Extension Housing to Case	1	91-Up	34348	8681168
516E	Seal, Filter	1	91-Up	84379	8656613
522E	Gasket, Valve Body Upper	1	91-Up	34320E	24204253
550E	Gasket, Accumulator	1	91-Up	34308	8661829
552E	Gasket, Pan (Exc Jaguar)	1	91-Up	34300EF	8677743
552E	Gasket, Pan (Exc Jaguar) (Bonded Rubber)	1	91-Up	34300EW	8677743
552E	Gasket, Pan (Jaguar)	1	91-Up	34300EJF	N.L.
562E	Gasket, Valve Body Lower	1	91-Up	34321E	24204268
N.I.	Bonded Sleeve, Forward (Inner) (.086" Orifice)	1	97-Up	34334D	24207501
N.I.	O-Ring, Output Speed Sensor (VSS)	1	91-Up	34370	6033448
METAL CLAD SEALS					
100A	Front	1	91-Up	34070E	8661602
472D	Case Seal	1	91-Up	34073E	8675517
480D	Rear (2.700" OD) (w/o Boot)	1	91-Up	34074	8675730
480D	Rear (2.700" OD) (w/ Boot)	1	91-Up	104074	8677463
480D	Rear (2.88" OD)	1	91-Up	34074EA	8675731
N.I.	Cooler Line Fitting to Center Support	1	91-Up	34079	24203511
SEALING RINGS & KITS					
N.I.	Ring Kit	1	91-Up	34175E	N.L.
114A	Stator Support (Plastic)	2	91-Up	34181E	24205833
128A	Turbine Shaft (To Stator Support) (Teflon)	2	91-Up	34177BT	8637170
130A	Turbine Shaft (To Forward Drum) (Teflon)	2	91-Up	34178BT	8661893
322C	Center Support Ring (Solid Teflon)	4	91-Up	92181T	8675729
322C	Center Support Ring (Plastic)	4	91-Up	34179	24205722
N.I.	Rear Accumulator (Outer) (Metal)	1	91-Up	34199A	8627153
FRICTION PLATES					
148A	Overrun	3	91-Up	34116	8661571
148A	Overrun (High Performance)	3	91-Up	R34116HP	N.L.
160A	4th Clutch	4	91-Up	34100	8682802
160A	4th Clutch (High Performance)	4	91-Up	R34100HP	N.L.
220B	Forward & Direct (.080")	10	91-95	34106	8655619
220B	Forward & Direct (.080") (Hi-Energy)	10	96-Up	34106E	24202646
220B	Forward & Direct (.061") (High Performance)	10	91-Up	A34106AH	N.L.
312C	Intermediate (.080")	4	91-95	34104E	8675521
312C	Intermediate (.080") (Hi-Energy)	4	91-95	34104EH	N.L.
312C	Intermediate (.071") (Hi-Energy)	4	96-Up	34104EA	24242966
312C	Intermediate (.070") (High Performance)	4	96-Up	R34104AHP	N.L.

ILL.		Qty.	Year	Part #	Ref. #
STEEL PLATES					
146A	Overrun	3	91-96	34136	8661569
146A	Overrun (Turbulator w/ Holes)	3	97-Up	34136B	24204287
162A	4th Clutch	4	91-96	34120	8661579
162A	4th Clutch (Turbulator w/ Holes)	4	97-Up	34120B	24204283
216B	Forward & Direct Cushion (Dished)	1-2	91-96	34127D	8680816
216B	Forward & Direct (5.7L) (14T) (Waved)	1	97-Up	34127EB	N.L.
216B	Forward & Direct (6.5L) (6T) (Waved)	1	97-Up	34127EA	24205560
216B	Forward & Direct (7.4L) (12T) (Waved)	1	97-Up	34127E	24205559
218B	Forward (.077")	5	91-Up	34128	8623849
234B	Direct (.090")	5	91-Up	34126A	29530330
234B	Direct (.090") (Kolene)	5	91-Up	34126AK	8625197
234B	Direct (.060")	5	91-Up	34126B	N.L.
314C	Intermediate (.076")	4	91-Up	34124E	8675522
N.I.	Intermediate Cushion (Waved)	1	96-Up	34125A	24204497
PRESSURE PLATES					
150A	Direct, Overrun Clutch	1	91-Up	34156	8681449
158A	4th Clutch (8 Lug)	1	91-98	34140	8661582
158A	4th Clutch (2 Lug)	1	99-Up	34140B	24205818
230B	Direct Clutch	1	91-Up	34146B	8675557
310C	Intermediate Clutch (w/ Lip)	1	91-98	34144B	8675519
310C	Intermediate Clutch (No Lip)	1	99-Up	34144C	24205827
FILTERS					
548E	Filter, 4L80E	1	91-96	34010E	8684221
548E	Filter, 4L80E	1	97-Up	34010EA	24204277
N.I.	Screen, PWM/TCC Solenoid-In Case (Thimble Type)	1	91-Up	34016	8661834
N.I.	Screen, Force Motor/Pressure Control	1	91-Up	34018	8661715
N.I.	Screen, Shift Solenoid (Long) (In Valve Body w/ O-Ring)	1	91-Up	34018A	8661709
FILTER KITS					
N.I.	Filter Kit, 4L80E (91-96 Exc Jaguar)	1	91-96	34011E	34011EF
N.I.	Filter Kit, 4L80E (91-96 Jaguar)	1	91-96	34011EJ	34011EJF
N.I.	Filter Kit, 4L80E	1	97-Up	34011EA	34011EAF
BANDS					
308C	Front (1" Wide) (Used w/ Front Servo Piston w/ 2.530" Pin)	1	91-98	34022	24202631
308C	Front (1.250" Wide) (Used w/ Front Servo Piston w/ 2.730" Pin)	1	99-Up	34022E	24210080
400D	Rear (Reverse) (Retro's All)	1	91-Up	34024E	24202229
BUSHINGS					
N.I.	Bushing Kit	1	91-96	34030E	N.L.
N.I.	Bushing Kit	1	97-Up	34030EA	N.L.
102A	Pump (.550" Wide)	1	91-96	34034B	8682195
102A	Pump (.700" Wide)	1	97-Up	34034BA	24205783
108A	Stator Support (Front)	1	91-Up	34036B	8683008
118A	Stator Support (Rear)	1	91-Up	34037B	8661614
132A	Overrun Drum (Front)	1	91-Up	34038	8661604
138A	Overrun Drum (Rear)	2	91-Up	34037	23015807
208B	Forward Drum	1	91-Up	34048	8661284
326C	Center Support	1	91-E97	34044B	8655622
326C	Center Support	1	L97-Up	34044C	8655622
348C	Sun Gear Shaft	1-2	91-Up	34037	23015807
348C	Sun Gear Shaft w/ Oil Grooves	1	97-Up	34037C	27207201
356C	Front Planet	1	91-Up	34053	8623192
426D	Output Shaft (Narrow)	1	91-Up	34062B	8624988
470D	Case	1	91-Up	34064B	8677221
478D	Extension Housing	1	91-03	34066C	8661368
478D	Extension Housing	1	04-Up	34066EX	N.L.
THRUST WASHERS/BEARINGS					
WASHERS					
N.I.	Washer Kit	1	91-Up	34200E	N.L.
N.I.	Washer Kit, Stator, 5 Selective Washers	1	91-Up	34211HK	N.L.
122A	Stator .059" (Blue)	1	91-Up	34211HA	8677571

ILL.		Qty.	Year	Part #	Ref. #
WASHERS (Cont.)					
122A	Stator .075" (Red)	1	91-Up	34211HB	8677572
122A	Stator .091" (Brown)	1	91-Up	34211HC	8677573
122A	Stator .107" (Green)	1	91-Up	34211HD	8677574
122A	Stator .123" (Black)	1	91-Up	34211HE	8677575
222B	Forward Drum to Forward Hub	1	91-Up	34232	8624196
226B	Forward Hub to Direct Drum	1	91-Up	34235	23013454
328C	Center Support to Front Planet (Metal)	1	91-Up	34226	8624783
404D	Front Planet to Rear Planet (2 Tang, Plastic)	1	91-Up	34268A	24214809
404D	Front Planet to Rear Planet (4 Tang, Metal)	1	91-Up	34268	8626372
404D	Front Planet to Rear Planet (4 Tang, Plastic)	1	91-Up	54244A	8628766
460D	Output Shaft to Case (4-Tang) (Metal)	1	91-Up	34268	8626372
462D	Output Shaft to Case .084" (3-Tang)	v1	91-Up	34269A	8625402
462D	Output Shaft to Case .092" (3-Tang)	1	91-Up	34269B	8625403
462D	Output Shaft to Case .100" (3-Tang)	1	91-Up	34269C	8625404
462D	Output Shaft to Case .108" (3-Tang)	1	91-Up	34269D	8625405
N.I.	Shim, Output Shaft (.005")	1	91-Up	34270	34006-05
BEARINGS					
N.I.	Bearing Kit	1	91-Up	34201E	N.L.
206B	Bearing w/ Race, Overdrive Planet to Forward Drum	1	91-Up	54235A	8628202
340C	Bearing w/ Race, Center Support to Sun Gear	1	91-Up	34242K	8623920
412D	Bearing w/ Race, Sun Gear to Rear Ring Gear	1	91-Up	34249AK	24208848
420D	Bearing w/ Race, Rear Ring Gear to Output Shaft	1	91-Up	34256K	8623922
N.I.	Shim, Under Race # 252 to Reduce End Play (10 Per Kit)	1	91-Up	34252S	34500-Z
N.I.	Bearing, Overdrive Planet (Captured)	1	91-Up	84237	N.L.
ELECTRICAL COMPONENTS					
432D	Wire Harness, Internal & External Repair (Snap Type)	1	91-03	34446K	24200161
432D	Wire Harness, Internal Repair (Exc Jaguar)	1	94-03	34446	24230344
432D	Wire Harness, Internal Repair (Exc Jaguar)	1	04-Up	34446C	24224906
432D	Wire Harness, Internal Repair (Jaguar Only)	1	91-Up	34446J	N.L.
432D	Repair Kit, Speed Sensor Connector	1	91-Up	74446CK	PT1798
518E	Switch, MLP Sensor (PRNDL) (7 Pin/ 4 Pin Connector)	1	95-Up	74410A	24229422
518E	Switch, MLP (PRNDL) (11 Pin Connector)	1	01-Up	74410B	24221125
520D	Speed Sensor, Input & Output (2 required)	2	91-Up	34436	24203876
560E	Solenoid, TCC, PWM	1	91-Up	34418	8676530
566E	Solenoid, EPC (1.5" Silver Can, 2 Prong Connector on the Bottom)	1	91-93	34435	96014182
566E	Solenoid, EPC (1.5" Black Can, 2 Prong Connector on the Bottom)	1	94-03	34435A	24209276
566E	Solenoid, EPC (1.5" Silver Can, 2 Prong Connector on the Side)	1	04-Up	34435C	24225320
572E	Solenoid, 1-2, 2-3, 3-4 Shift (Solenoids A or B)	2	91-Up	34421	10478125
572E	Solenoid, 1-2, 3-4 Shift (Solenoid A Only) (OEM)	1	91-Up	D34421A	10478142
572E	Solenoid, 2-3 Shift (Solenoid B Only) (OEM)	1	91-Up	D34422	10478143
576E	Switch, Manifold Pressure Switch	1	91-Up	34442	24200695
N.I.	Sensor, Temperature	1	91-Up	34437	8661818
N.I.	Bracket, Wire Harness Connector	1	91-Up	34444-1	34998-01K
N.I.	Wiring Harness (External Repair) (Universal 20 Pin) (GM)	1	94-Up	74445U	N.L.
N.I.	Tool, Wire Harness Removal Tool (Teckpak)	1	91-Up	T-TGM-HR	N.L.
VALVE BODY RECALIBRATION KITS					
N.I.	Shift Kit®, 4L80E (Transgo)	1	91-Up	T34165E	SK® 4L80E
N.I.	Valve Body Kit, 4L80E (Superior)	1	91-Up	S34165E	K4L80E
N.I.	Reprogramming Kit™, HP HD Automatic w/ Complete Gear Control (Transgo)	1	91-Up	T34169E	4L80E-HD2
N.I.	Reprogramming Kit™, Stick Shift. Manual Shift Only (Transgo)	1	91-Up	T34173E	4L80E-3
VALVE BODY COMPONENTS					
556E	Plate, Valve Body (Universal) (Transgo)	1	91-08	A34747U	48-PLT-01
N.I.	Repair Kit, Fixes 5 Valve Body Plate Holes	1	91-Up	VB-101	N.L.
N.I.	Valve Kit, TCC Regulator (Uses S34741C-1)	1	91-Up	34741CK	34994-01K
N.I.	Repair Kit, Actuator Limit Bore w/ Reamer 5 Oversized Valves and Springs	1	91-Up	A34741LRK	48-ACT-TL
N.I.	Refill For A34741LRK (Includes 6 Oversize Actuator Valves)	1	91-Up	A34741L	48-ACT-VL6
PUMPS					
104A	Pump Body	1	91-96	34510E	8680908
104A	Pump Body	1	91-Up	34510EA	24211287
110A	Stator, Pump Cover (Cast # 263)	1	91-96	34520EA	24205398
110A	Stator, Pump Cover (Cast # 512)	1	97-Up	34520EC	8681180
112A	Pump, One Cooler Fitting	1	97-03	34500EA	24211287

ILL.		Qty.	Year	Part #	Ref. #
PUMPS (Cont.)					
112A	Pump, One Cooler Fitting	1	04-Up	34500EB	24211287
112A	Pump, Two Cooler Fittings	1	91-96	34500E	N.L.
PUMP COMPONENTS					
106A	Pump Gears	1	91-Up	34530A	34201E-SP
N.I.	Boost Valve, Press Regulator	1	95-Up	34507RBK	34200-03K
N.I.	Boost Valve, Press Regulator (.855")	1	91-E95	34507BV	8680549
N.I.	Boost Valve Sleeve, Press Regulator (.855")	1	91-E95	34507ER	8682856
N.I.	Boost Valve Sleeve, Press Regulator (.830")	1	L95-Up	34507FR	24202645
N.I.	Valve, Press Regulator Line to Tube	1	95-Up	34507P	34200-14K
N.I.	Valve & Sleeve, Boost Valve (w/ O-Ring)	1	91-Up	34507RDK	34200-01K
N.I.	Plug, End TCC & Pressure Valves (5 Per Bag)	1	91-Up	34507P-6	34200-05K
N.I.	Pressure Regulator Valve Kit (Uses Sealing Rings S34507PK-1)	1	91-Up	34507PK	34910-03K
DRUMS & COMPONENTS					
134A	Drum, Overrun Clutch w/ Sun Gear (With .310 OD Roller Clutch)	1	91-E01	34551	8680918
134A	Drum, Overrun Clutch w/ Sun Gear (With .195 OD Roller Clutch)	1	L01-Up	34551A	N.L.
134A	Overrun Clutch Kit w/ Sun Gear	1	91-Up	34551AK	N.L.
140A	Piston, Overrun Clutch (Bonded)	1	91-Up	34960E	24202092
142A	Retainer w/ Spring, Overrun Clutch Return	1	91-04	34970	8661629
202B	Drum, 4th Clutch (Cast # 8686123)	1	91-Up	34545	24200789
202B	Drum, 4th Clutch (Cast # 24205817) with .310 OD	1	99-Up	34545B	24215124
210B	Drum, Forward Clutch w/ Ring Gear	1	91-96	34554E	8680917
210B	Drum, Forward Clutch w/ Ring Gear	1	97-Up	34554EA	24234155
212B	Piston, Forward Clutch	1	91-96	34964E	8675508
212B	Piston, Forward Clutch (Bonded)	1	97-Up	34964EA	24204957
214B	Spring, Forward Piston Return	1	91-Up	34974	8661764
224B	Clutch Hub, Forward Clutch	1	91-Up	34574	8661611
228B	Clutch Hub, Direct Clutch	1	91-Up	34575E	8661837
240B	Piston, Direct (6 Clutch Late) (Aluminum, No Check Ball)	1	91-96	34965E	8675511
240B	Piston, Direct Clutch (Bonded)	1	97-Up	34965G	24204961
300C	Direct (5 Clutch) (w/o Sprag)	1	91-Up	34555E	24209311
N.I.	Piston Kit, 4th Clutch	1	91-Up	34560	N.L.
N.I.	Piston Kit, Overrun Clutch	1	91-Up	34561	N.L.
N.I.	Piston Kit, Forward Clutch	1	91-Up	34564E	N.L.
N.I.	Piston Kit, Direct (5 Clutch)	1	91-Up	34565B	8625931
PLANETS					
154A	Planet, Overdrive (3.215" Diameter Inside Race) (2 Missing Splines)	1	91-92	34580	8680918
154A	Planet, Overdrive (3.210" Diameter Inside Race) (4 Missing Splines)	1	93-00	34580A	N.L.
154A	Planet, Overdrive (3.010" Diameter Inside Race) (4 Missing Splines)	1	01-Up	34580B	N.L.
154A	Planet, Overdrive Planet Kit (OE Retros all 91-00)	1	91-00	D34580K	24200130
358C	Planet, Front, 4 Gear (Angled Teeth) (No Tab Roller Clutch Type)	1	91-95	34582A	24212051
358C	Planet, Front, 4 Gear (Angled Teeth) (8 Tab Roller Clutch Type)	1	95-Up	34582AA	N.L.
358C	Planet, Front, 4 Gear (Straight Teeth)	1	91-98	34582S	24205552
358C	Planet, Front, 5 Gear	1	99-Up	34582AB	N.L.
408D	Planet, Rear, 4 Gear (Angled Teeth) w/ Electric Pick-Up	1	91-98	34584E	24212052
408D	Planet, Rear, 4 Gear (Straight Teeth) w/ Electric Pick-Up	1	91-98	34584SE	8675612
408D	Planet, Rear, 4 Gear (Straight Teeth) w/ Speed Sensor	1	91-98	34584S	8681946
408D	Planet, Rear, 5 Gear	1	99-Up	34584EA	N.L.
418D	Ring Gear, Rear Planet (Angled Teeth)	1	91-96	34594	8661892
418D	Ring Gear, Rear Planet (Straight Teeth)	1	91-96	34594S	8683771
418D	Ring Gear, Rear Planet (Angled Teeth)	1	97-Up	34594B	N.L.
N.I.	Geartrain, Front & Rear Planets, Sun Gear, Ring Gear (Straight)	1	91-99	34583S	N.L.
N.I.	Geartrain, Front & Rear Planets, Sun Gear, Ring Gear (Angled)	1	91-96	34583A	N.L.
N.I.	Geartrain, Front & Rear Planets, Sun Gear, Ring Gear (Angled)	1	97-99	34583B	N.L.
N.I.	Geartrain, Front & Rear Planets, Sun Gear, Ring Gear	1	00-Up	34583EA	N.L.
SUN GEARS					
354C	Sun Gear, Angled Teeth (28 Splines Inside)	1	91-96	34612A	8626807
354C	Sun Gear, Angled Teeth (28 Splines Inside) (4 Groove)	1	97-Up	34612B	24209475
354C	Sun Gear, Straight Teeth (32 Splines Inside)	1	91-96	34612S	8627130

ILL.		Qty.	Year	Part #	Ref. #
ONE WAY CLUTCHES					
144A	Roller Clutch, Overdrive (.310" OD Rollers)	1	91-E01	34650	7471001
144A	Roller Clutch, Overdrive (.195" OD Rollers)	1	L01-UP	34650A	12431003
304C	Sprag, Intermediate (16 Element)	1	91-Up	34652B	8623116
304C	Sprag, Intermediate (34 Element)	1	91-Up	34652A	8633173
346C	Roller Clutch, Low (Rear)	1	91-E95	34654	7471002
346C	Roller Clutch, Low (Rear) (with 8 vertical tabs)	1	L95-Up	34654E	7471002
SHELLS & SUPPORTS					
324C	Center Support	1	91-96	34630E	8661865
324C	Center Support	1	91-96	34630EA	N.L.
324C	Center Support (no Spacer Type)	1	97-98	34630EB	24208849
324C	Center Support (Spacer Type)	1	99-Up	34630EC	24217454
SHAFTS					
126A	Input Shaft	1	91-Up	34670EA	24222184
350C	Intermediate Sun Gear	1	91-96	34674A	8661708
350C	Intermediate Sun Gear without spacer	1	97-98	34674B	24207247
350C	Intermediate Sun Gear with spacer	1	99-Up	34674BA	24207264
410D	Main Shaft (Hollow)	1	91-96	34672A	8661613
410D	Main Shaft (Solid)	1	97-Up	34672B	N.L.
VALVE BODIES & GOVERNORS					
568E	Valve Body	1	91-92	34740-3	N.L.
568E	Valve Body	1	92-96	34740-2	N.L.
568E	Valve Body	1	97-03	34740-1	N.L.
568E	Valve Body	1	04-Up	34740-6	N.L.
CASES/HOUSINGS & COMPONENTS					
468D	Case, GM (Gas Exc Jaguar)	1	91-E96	34760E	N.L.
468D	Case, GM (Diesel & Gas Jaguar)	1	91-E96	34760EA	N.L.
468D	Case, GM (Gas Exc Jaguar)	1	97-03	34760EB	N.L.
476D	Extension Housing, 2.750"(4wd)	1	91-Up	34770G	8680912
476D	Extension Housing, 5.750"w/ Bearing (2wd)	1	91-Up	34770EB	8677464
476D	Extension Housing, 6.625" w/ Bearing (2wd)	1	91-Up	34770EA	N.L.
558E	Pan, 2wd GM (w/ Drain Plug on Bottom) (Shallow On One End)	1	97-Up	34765EA	N.L.
MISCELLANEOUS COMPONENTS					
402D	Silencer Ring, .177" Thick	1	91-Up	34476	8626112
436D	Spring, Rear Servo (Blue)	1	91-Up	34946	8624256
436D	Spring, Rear Servo (Yellow)	1	91-Up	34946A	8624391
N.I.	Reluctor Wheel, Speed Sensor (Presses on Rear Planet)	1	91-Up	34477A	34880-01
N.I.	Cup Plug, Parking Pawl Pin	1	91-Up	54483A	8620318
N.I.	Clip, Retaining Clip for 3/8" Push-In Cooler Line to Case Fittings	2	91-Up	74496A	24205103
N.I.	Bolt, Center Support to Case	1	91-Up	34783A	8661762
N.I.	Bolt, 4th Clutch Housing to Case	1	91-Up	34784	8686124
N.I.	Spring, Torque Signal Compensator	1	91-Up	34941	8675603
N.I.	Shaft, Manual Lever	1	91-94	34991E-4	38511-01K
N.I.	Fitting, Cooler Line (5/16" x 1/4")	2	91-Up	M462C	N.L.
N.I.	Cooler Line Fitting (Connector - Clip)	1	96-Up	74996B	24205102
N.I.	Fitting, Cooler Line	2	91-95	34996E	8651654
N.I.	Fitting, Cooler Line to Case (Rear) Quick Connect	2	96-Up	34996EA	24207013
SERVOS & ACCUMULATORS					
438D	Pin, Rear Servo (3.471")	1	91-Up	34913H	8627194
448D	Piston, Rear Servo (without Raised Hump)	1	91-96	34912	N.L.
448D	Piston, Rear Servo (with Raised Hump)	1	97-Up	34912A	N.L.
448D	Piston Retaining Clip, Rear Servo (Qty 10 Per Bag) (Sonnax)	1	97-Up	S34912-5	34989-01
448D	Piston Kit, Rear Servo	1	97-Up	34912AK	N.L.
508E	Spring, Front Servo	1	91-Up	34906	8623489
530E	Piston, 3rd Clutch Accumulator	1	91-Up	34932	8683088
N.I.	Kit, Front Servo Piston & Sleeve	1	91-Up	34905BAK	24200418
N.I.	Servo Assembly, Rear (without Raised Hump on Piston)	1	91-96	34910	N.L.
N.I.	Servo Assembly, Rear (with Raised Hump on Piston)	1	97-Up	34910A	N.L.
N.I.	Accumulator Assembly w/ Seals (Upgrade Service Package)	1	91-Up	34947K	24205250
N.I.	Housing, 2-3 & 3-4 Accumulator	1	91-93	34934E	8689993
N.I.	Housing, 2-3 & 3-4 Accumulator	1	94-95	34934EA	8684220

ILL.		Qty.	Year	Part #	Ref. #
SERVOS & ACCUMULATORS (Cont.)					
N.I.	Piston, 4th Clutch Accumulator	1	91-Up	34937	24206749
N.I.	Piston w/ Sleeve, 4th Clutch Accumulator	1	91-Up	34937AK	34805-01K
TECHNICAL MANUALS					
N.I.	Technical Manual	1	91-Up	34400E	83-4L80E
N.I.	Code Manual (Also Fits 4L60E)	1	91-Up	34400EC	4L80E
N.I.	Transmission Guide (GM)	1	91-Up	34400B	TMG-4L80E

PRODUCT ANNOUNCEMENT

Piston Kit 4L80E 4L85E 1997-Up (3 Pistons)

Seal Aftermarket Products now has the complete Piston Kit for the 4L80E covering 1997-Up.
Please call your Sales Representative for pricing and availability

34964EA
Piston 4L80E 4L85E Forward Clutch 1997-Up

34965G
Piston 4L80E 4L85E Direct Clutch 1997-Up



34960E
Piston 4L80E 4L85E Overrun Clutch 1991-Up

34960A
Piston Kit 4L80E 4L85E 1997-Up [3 Pistons]

Available in TTK Overhaul & Box Kits

34002EAXP - Overhaul 4L80E 1997-Up (W/Out Pan Gasket)
34004EAXP - Master L/Steels 4L80E 1997-Up (W/Out Pan Gasket)
34004EAXP - Master W/Steels 4L80E 1997-Up (W/Out Pan Gasket)

Release Date 10/31/2013

Sales Policy: All shipments are FCA Pembroke Park. Price and Availability subject to change
© 2013 Seal Aftermarket Products LLC. ALL RIGHTS RESERVED. Possession of price list does not constitute offer to sell
Disclaimer - All information has been checked for accuracy, however no liability can be assumed for errors and omissions

Seal Aftermarket Products LLC · 2315 SW 32nd Avenue · Pembroke Park FL 33023 · [P] (800) 582-2760 · [F] 954-364-2401 · www.sealaftermarketproducts.com

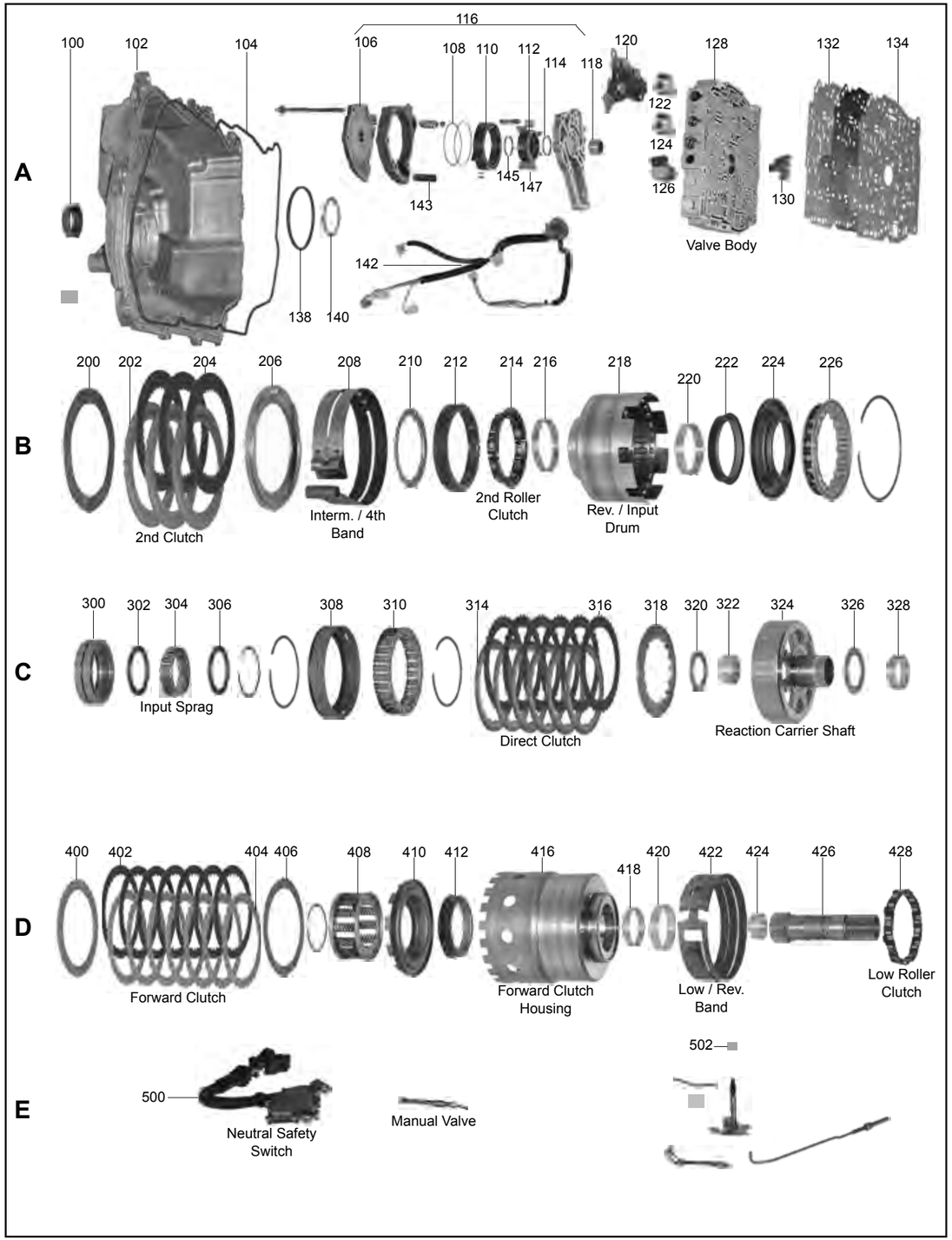
A
B
C
D
E
100
102
104
106
108
110
112
114
116
118
120
122
124
126
128
130
132
134
138
140
142
143
145
147
Valve Body
200
202
204
206
208
210
212
214
216
218
220
222
224
226
2nd Clutch
Interm. / 4th Band
2nd Roller Clutch
Rev. / Input Drum
300
302
304
306
308
310
314
316
318
320
322
324
326
328
Input Sprag
Direct Clutch
Reaction Carrier Shaft
400
402
404
406
408
410
412
416
418
420
422
424
426
428
Forward Clutch
Forward Clutch Housing
Low / Rev. Band
Low Roller Clutch
500
Neutral Safety Switch
Manual Valve
502

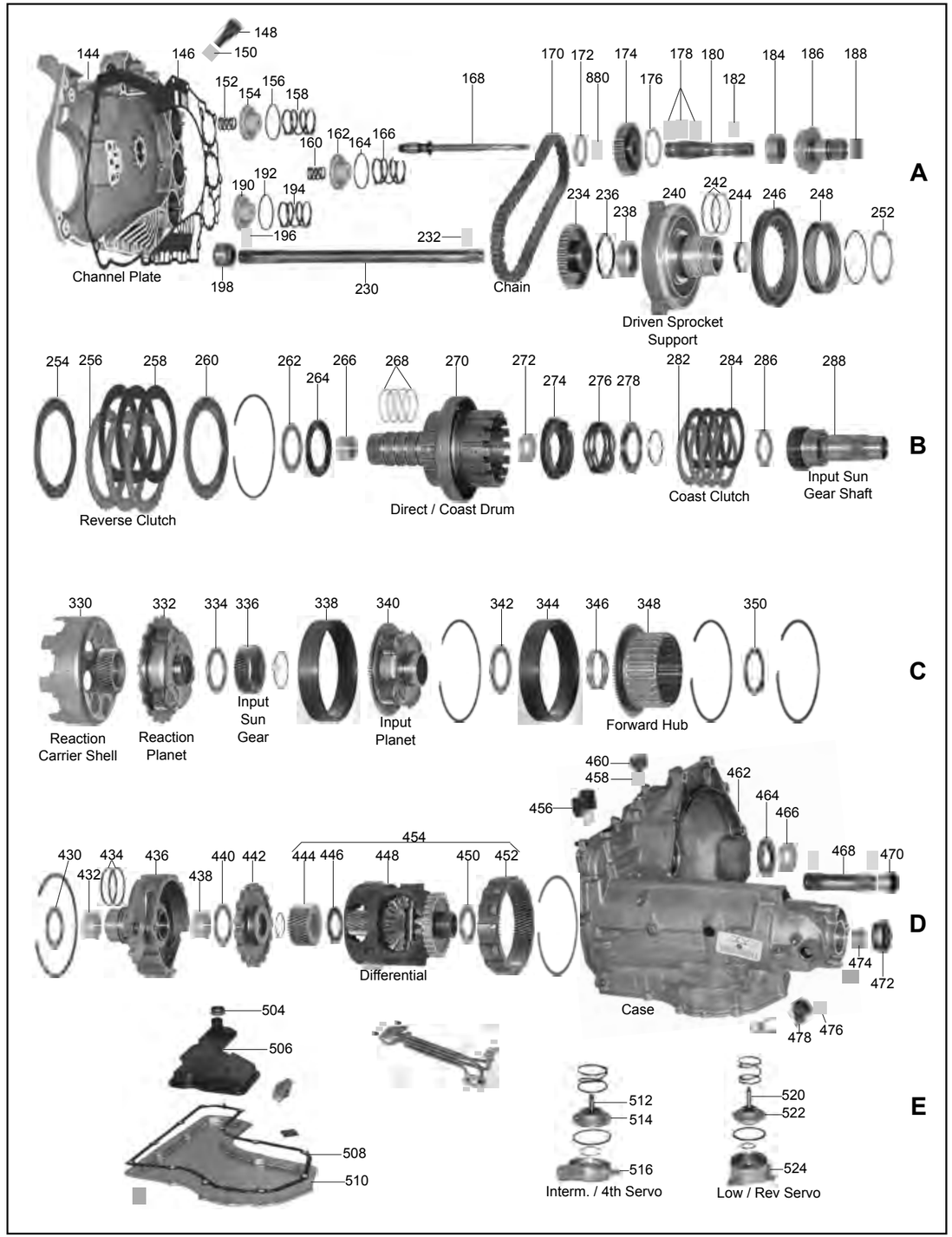
A
B
C
D
E
144
146
148
150
152
154
156
158
160
162
164
166
168
170
172
174
176
178
180
182
184
186
188
190
192
194
196
198
230
232
880
Channel Plate
Chain
Driven Sprocket Support
234
236
238
240
242
244
246
248
252
254
256
258
260
262
264
266
268
270
272
274
276
278
282
284
286
288
Reverse Clutch
Direct / Coast Drum
Coast Clutch
Input Sun Gear Shaft
330
332
334
336
338
340
342
344
346
348
350
Reaction Carrier Shell
Reaction Planet
Input Sun Gear
Input Planet
Forward Hub
430
432
434
436
438
440
442
444
446
448
450
452
454
456
458
460
462
464
466
468
470
472
474
476
478
Differential
Case
504
506
508
510
512
514
516
520
522
524
Interm. / 4th Servo
Low / Rev Servo

ILL.		Qty.	Year	Part #	Ref. #
DELUXE KITS (SUPER KITS WITH STEELS)					
N.I.	4T40E, 4T45E (w/ Pistons)	1	95-Up	14008APW	N.L.
MASTER OVERHAUL KITS (WITH STEELS)					
N.I.	4T40E, 4T45E (w/ Pistons)	1	95-Up	14006APW	N.L.
MASTER OVERHAUL KITS (LESS STEELS)					
N.I.	4T40E, 4T45E (w/ Pistons)	1	95-Up	14004APW	N.L.
OVERHAUL KITS (WITH RINGS AND SEALS)					
N.I.	4T40E, 4T45E (w/o Pistons)	1	95-Up	14002AW	N.L.
BONDED PISTONS					
N.I.	Bonded Piston Kit	1	95-Up	14960K	N.L.
222B	Sleeve, Reverse Clutch (Bonded)	1	95-Up	14966AC	24205041
224B	Reverse Clutch (Bonded)	1	95-Up	14966A	N.L.
246A	2nd Clutch (Bonded)	1	95-Up	14962A	N.L.
274B	Coast Clutch (Bonded)	1	95-Up	14969A	24205043
308C	Direct Clutch (Bonded)	1	95-Up	14965A	24205044
410D	Forward Clutch (Bonded)	1	95-Up	14964A	24208641
412D	Sleeve, Forward Clutch (Bonded)	1	95-Up	14963A	24208642
GASKETS & O-RINGS					
104A	Gasket, Side Cover (Outer)	1	95-Up	14301	24200478
132A	Gasket, Separator Plate to VB	1	95-03	14321	24212642
132A	Gasket, Separator Plate to VB (White Stripe)	1	04-05	14321A	24216019
134A	Gasket, Separator Plate to Case	1	95-03	14320	24204141
134A	Gasket, Separator Plate to Case (White Stripe)	1	04-05	14320A	24216017
134A	Gasket Kit, Valve Body (Contains 2 Gaskets)	1	06-Up	14320BK	N.L.
138A	Gasket, Side Cover (Inner)	1	95-Up	14301A	8685154
146A	Gasket, Case Cover	1	95-Up	14324	24201096
508E	Gasket, Bottom Pan (Bonded)	1	95-Up	14300AW	24203590
N.I.	Seal, Sump Filter to Case	1	95-Up	14379	8684467
N.I.	Seal, Cooler Line to Case	1	95-Up	14378	N.L.
METAL CLAD SEALS					
100A	Axle (Left/Right)	2	95-Up	14076A	24201936
198A	Axle Sleeve (Left/Right)	2	95-Up	14077A	8684482
464D	Converter	1	95-Up	84070	24204772
502E	Manual Lever	1	95-Up	84072A	8644709
SEALING RINGS & KITS					
N.I.	Ring Kit	1	95-Up	14175A	N.L.
FRICTION PLATES					
204B	2nd Clutch	3	95-Up	14104A	24209723
258B	Reverse	3	95-Up	14110A	24209379
284B	Coast	4	95-Up	14112A	24209726
316C	Direct (External Teeth)	4-6	95-Up	14106A	24209727
402D	Forward	7	95-Up	14108A	24209729
STEEL PLATES					
200B	2nd Clutch .070" (No T) Waved	1	95-Up	14125A	24200298
202B	2nd Clutch .089" (8T)	3	95-Up	14124A	24200790
254B	Reverse .043" (30T) Waved	1	95-Up	14131A	24200466
256B	Reverse .088" (30T)	3	95-97	14130A	24200757
256B	Reverse .085" (30T) (w/ 4 Turbulator Holes)	3	98-Up	14130B	24207081
282B	Coast .069" (12T)	4	95-Up	14132A	8685874
314C	Direct .074" (16T) Internal Teeth	4-6	95-Up	14126A	8685879
404D	Forward .069" (30T)	7	95-Up	14128A	8684444
406D	Forward .039" (30T) Waved	1	95-Up	14129A	24200467
PRESSURE PLATES					
206B	Intermediate (2nd Design)	1	95-Up	14144A	8684324
260B	Reverse Backing (.126")	1	95-Up	14150A	24200756
260B	Reverse Backing (.177")	1	95-Up	14150B	24200950
260B	Reverse Backing (.222")	1	95-Up	14150C	24200951

ILL.		Qty.	Year	Part #	Ref. #
PRESSURE PLATES (Cont.)					
318C	Direct Backing	1	95-Up	14146	8689875
400D	Forward Backing (.197") (Flat)	1	95-Up	14148	24200595
FILTERS					
506E	Filter	1	95-Up	14010A	8685185
N.I.	Screen, Shift Solenoid (Snaps in Separator Plate)	1	95-Up	74016A	24209144
N.I.	Screen, Actuator Feed (in Valve Body)	1	95-Up	14016	N.L.
FILTER KITS					
N.I.	Filter Kit	1	95-Up	14011AW	N.L.
BANDS					
208B	Intermediate (2-4) Flex	1	95-Up	14022A	8684403
422D	Low/ Reverse	1	95-Up	84022E	8651614
BUSHINGS					
N.I.	Bushing Kit	1	95-Up	14030A	N.L.
188A	Converter Reactor	1	95-Up	54036A	8628915
216B	Reverse Drum (Front)	1	95-Up	14061A	N.L.
220B	Reverse Drum (Rear)	1	95-Up	14061B	N.L.
244A	Driven Support	1	95-Up	14045A	N.L.
272B	Input Shaft (Rear)	1	95-Up	14047A	N.L.
322C	Reaction Carrier Shell (Front) (Direct Drum)	1	95-Up	14051A	N.L.
328C	Reaction Carrier Shell (Rear)	1	95-Up	14056A	N.L.
346C	Forward Clutch Hub	1	95-Up	14050A	N.L.
418D	Forward Drum (Front)	1	95-Up	14048A	N.L.
420D	Forward Drum (Rear)	1	95-Up	14048B	N.L.
424D	Final Drive Shaft	1	95-Up	14062A	N.L.
432D	Final Drive Support	2	95-Up	14054A	N.L.
466D	Converter Hub	1	95-Up	64032B	8637905
474D	Case	1	95-Up	64060	8631119
THRUST WASHERS/BEARINGS					
WASHERS					
N.I.	Washer Kit	1	95-Up	14200A	N.L.
140A	Driven Sprocket to Case Cover	1	95-Up	14280A	N.L.
172A	Drive Sprocket to Case Cover	1	95-Up	14278A	N.L.
176A	Drive Sprocket to Stator Support	1	95-Up	64279A	N.L.
236A	Driven Sprocket to Driven Support	1	95-Up	14281A	8684379
252A	Driven Sprocket to Rev Input (8 Tabs)	1	95-Up	14226A	8684259
350C	Forward Clutch Hub	1	95-Up	14235A	8685039
264B	Driven Support to Direct Drum .072	1	95-Up	14230B	
264B	Driven Support to Direct Drum .107	1	95-Up	14230E	
264B	Driven Support to Direct Drum .141	1	95-Up	14230H	
BEARINGS					
N.I.	Bearing Kit	1	95-Up	14201A	N.L.
118A	Bearing, Pump Shaft	1	95-Up	14209	33000-01
184A	Bearing, Stator	1	95-Up	64295	8631186
ELECTRICAL COMPONENTS					
120A	Switch, Pressure Manifold (6 Switch)	1	95-03	14411A	24226580
120A	Switch, Pressure Manifold (3 Switch)	1	04-Up	14411B	24217544
122A	Solenoid, 1-2, 3-4 Shift (A & B)	2	95-Up	14421A	10478124
126A	Solenoid, Pressure Control (EPC)	1	95-03	84431G	31752-KA001
126A	Solenoid, Pressure Control (EPC)	1	04-Up	84431H	24225825
130A	Solenoid, Lock-Up (TCC)	1	95-Up	74418E	24227747
142A	Wire Harness, Internal (14 Prong Gray Round Connector)	1	95-Up	14446	24230346
142A	Wire Harness, Internal (13 Prong Black Round Connector)	1	04-Up	14446A	24229665
456D	Sensor, Turbine/ Input (TSS) 4 Cyl (32 or 33T)	1	95-Up	14438	24218077
456D	Sensor, Turbine/ Input (TSS) 6 Cyl (35T)	1	97-Up	14438A	10456546
478D	Sensor, Output Speed (VSS) (Exc 95-Up Sunfire)	1	95-Up	14436A	24207507
478D	Sensor, Output Speed (VSS) (95-Up Sunfire)	1	95-Up	14436B	N.L.
500E	MLPS w/ Wire Harness	1	1995	14446B	1245550
500E	MLPS w/o Wire Harness	1	1996	14410B	11516166

ILL.		Qty.	Year	Part #	Ref. #
ELECTRICAL COMPONENTS (Cont.)					
500E	MLPS w/o Wire Harness (2 Connectors, 7 & 4 Pins)	1	97-Up	14410	12450161
500E	MLPS w/o Wire Harness (1 Connector, 11 Pins)	1	04-Up	14410A	24219476
N.I.	Wiring Harness (External Repair) (Universal 20 Pin) (GM)	1	95-Up	74445U	N.L.
N.I.	Tool, Wire Harness Removal Tool (Teckpak)	1	95-Up	T-TGM-HR	N.L.
PUMPS					
116A	Pump	1	95-Up	14500	N.L.
186A	Converter Reactor (Stator Support Shaft)	1	95-Up	14529	N.L.
N.I.	Repair Kit, Pressure Reg. Valve	1	95-Up	14507K	4T40E-PRT
N.I.	Repair Kit, Pressure Reg. Valve (Refills)	1	95-Up	14507RK	N.L.
DRUMS & COMPONENTS					
218B	Reverse	1	95-Up	14556	N.L.
222B	Sleeve, Reverse Clutch (Bonded)	1	95-Up	14966AC	24205041
224B	Piston, Reverse Clutch (Bonded)	1	95-Up	14966A	N.L.
246A	Piston, 2nd Clutch (Bonded)	1	95-Up	14962A	N.L.
270B	Input (Direct/Coast Clutch)	1	95-Up	14559	N.L.
274B	Piston, Coast Clutch (Bonded)	1	95-Up	14969A	24205043
308C	Piston, Direct Clutch (Bonded)	1	95-Up	14965A	24205044
410D	Piston, Forward Clutch (Bonded)	1	95-Up	14964A	24208641
412D	Sleeve, Forward Clutch (Bonded)	1	95-Up	14963A	24208642
416D	Forward	1	95-Up	14554	N.L.
PLANETS & COMPONENTS					
332C	Reaction (3 Gear)	1	95-Up	14584	N.L.
340C	Input (4 Gear)	1	95-Up	14582	N.L.
344C	Ring Gear, Input & Reaction Planet	1	95-Up	14592	N.L.
452D	Ring Gear, Final Drive 78T Right Angle 15 Lugs	1	95-Up	14598	N.L.
SUN GEARS					
336C	Sun Gear, Rear Input	1	95-Up	14612	N.L.
ONE WAY CLUTCHES					
300C	Cam, Intermediate One Way (Outer)	1	95-Up	14669	N.L.
304C	Sprag, Forward	1	95-Up	14658A	24203617
214B	Roller, 2nd Clutch (12 Element)	1	95-Up	14652A	930695
428D	Roller Clutch, Low (16 Element)	1	95-97	14654A	7471005
428D	Roller Clutch, Low (17 Rollers)	1	98-E06	14654B	7471035
428D	Roller Clutch, Low (21 Rollers)	1	L06-Up	14654C	7471035
SHELLS & SUPPORTS					
330C	Shell, Direct Clutch Housing/ Reaction	1	95-Up	14624	N.L.
436D	Support, Rear w/ Parking Pawl (16 Rollers)	1	95-98	14634	N.L.
436D	Support, Rear w/ Parking Pawl (21 Rollers)	1	06-Up	14634C	N.L.
SHAFTS					
168A	Shaft, Pump Drive	1	95-Up	14671	8684255
180A	Shaft, Turbine 6" Long	1	95-Up	14673	N.L.
230A	Shaft, Output (Right Side Stub)	1	95-Up	14678	N.L.
230A	Shaft, Output (Left Side)	1	95-Up	14678A	N.L.
288B	Shaft, Input Sun Gear	1	95-Up	14674	N.L.
426D	Shaft, Final Drive Sun Gear (w/ Hub)	1	95-Up	14677	N.L.
VALVE BODIES & GOVERNORS					
128A	Valve Body (w/ Holley) (Vented PR Valve)	1	95-01	14740-1	N.L.
128A	Valve Body (w/ Holley) (Solid PR Valve)	1	02-03	14740-2	N.L.
128A	Valve Body (w/ Bosch)	1	04-05	14740-4	N.L.
128A	Valve Body (Cast 2423326)	1	06-08	14740-5	N.L.

ILL.		Qty.	Year	Part #	Ref. #
CHAINS AND SPROCKETS					
170A	Chain, .625 Wide	1	L03-Up	14700C	N.L.
170A	Chain, .750" Wide	1	95-Up	14700A	24200738
170A	Chain, .875" Wide	1	97-Up	14700B	24202447
174A	Sprocket, Drive 32T (3.600" OD)	1	95-Up	14705	N.L.
240A	Support, Driven Sprocket	1	95-Up	14713	N.L.
240A	Support, Driven Sprocket (w/ Check Ball Capsule)	1	95-Up	14713A	N.L.
N.I.	Sprocket Assembly (32T / 38T) .750" Chain	1	95-Up	14705K	N.L.
N.I.	Sprocket Assembly (32T / 38T) .875" Chain	1	95-Up	14705CK	N.L.
CASES/HOUSINGS & COMPONENTS					
144A	Channel Plate	1	95-96	14755	N.L.
144A	Channel Plate	1	97-Up	14755A	N.L.
510E	Pan, Bottom	1	95-Up	14765	8685184
DIFFERENTIALS					
444D	34T Sun Gear, 22T Pinion (3.29 Ratio)	1	95-Up	14715	N.L.
444D	38T Sun Gear, 20T Pinion (3.05 Ratio)	1	95-Up	14715A	N.L.
444D	42T Sun Gear, 18T Pinion (2.86 Ratio)	1	95-Up	14715B	N.L.
452D	Ring Gear, Final Drive 78T Right Angle	1	95-Up	14598	N.L.
MISCELLANEOUS COMPONENTS					
N.I.	Sleeve, Case Cover	1	95-Up	14761	N.L.
SERVOS & ACCUMULATORS					
N.I.	Spring, 1-2 Accumulator	1	95-Up	14926	8685241
N.I.	Spring, 1-2 Accumulator Cushion	1	95-96	14926B	24203557
N.I.	Spring, 1-2 Accumulator Cushion (w/ Insert)	1	97-Up	14926A	24207237
N.I.	Spring, 2-3 Accumulator Cushion	1	95-Up	14926B	24203557
N.I.	Piston, Accumulator	1	95-Up	14930	24210506
N.I.	Spring, Accumulator (Case Cover Side)	1	95-Up	14931	8685240
TECHNICAL MANUALS					
N.I.	Technical Manual, 4T40E,4T45E	1	95-Up	14400A	83-4T40E
N.I.	Transmission Guide (GM)	1	95-Up	14400B	TMG-4T40E

Notes

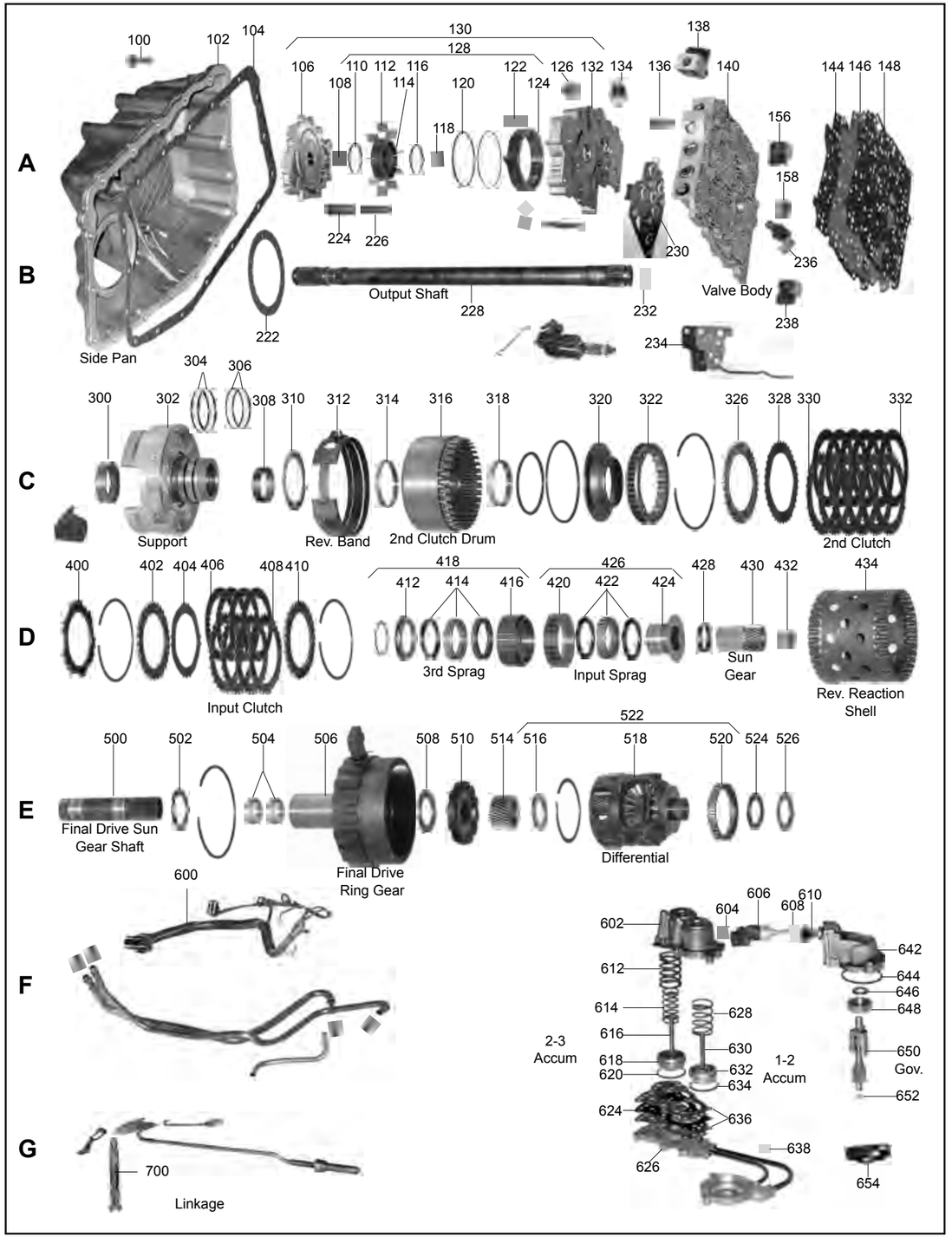
A
B
C
D
E
F
G
100
102
104
106
108
110
112
114
116
118
120
122
124
126
130
128
132
134
136
138
140
144
146
148
156
158
224
226
230
236
Output Shaft
228
232
Valve Body
238
222
Side Pan
234
300
302
304
306
308
310
312
314
316
318
320
322
326
328
330
332
Support
Rev. Band
2nd Clutch Drum
2nd Clutch
400
402
404
406
408
410
418
412
414
416
426
420
422
424
428
430
432
434
3rd Sprag
Input Sprag
Sun Gear
Input Clutch
Rev. Reaction Shell
500
502
504
506
508
510
514
516
522
518
520
524
526
Final Drive Sun Gear Shaft
Final Drive Ring Gear
Differential
600
700
Linkage
602
604
606
608
610
612
614
616
618
620
624
626
628
630
632
634
636
638
642
644
646
648
650
652
654
2-3 Accum
1-2 Accum
Gov.

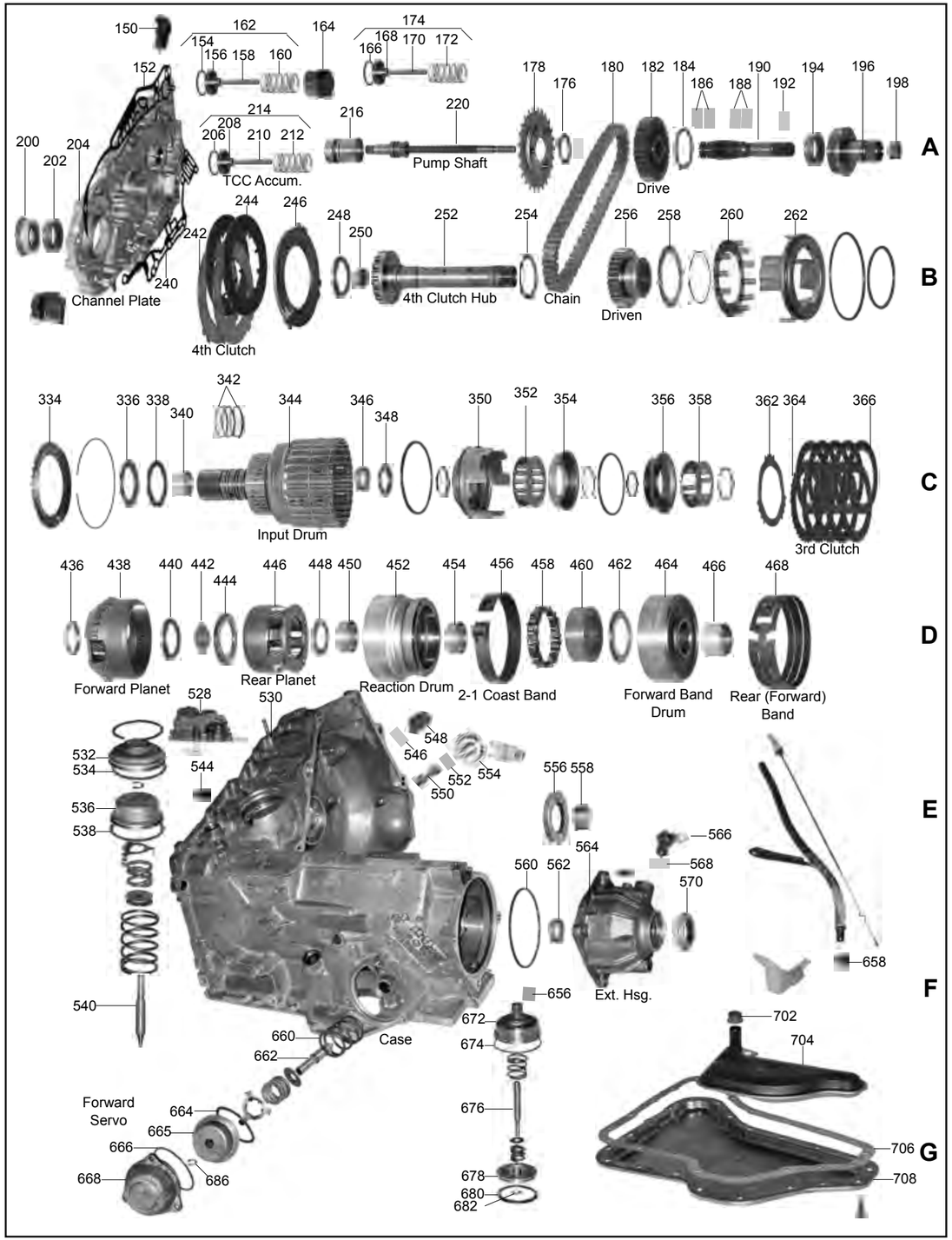
A
B
C
D
E
F
G
150
152
154
156
158
160
162
164
166
168
170
172
174
176
178
180
182
184
186
188
190
192
194
196
198
200
202
204
206
208
210
212
214
216
220
TCC Accum.
Pump Shaft
Drive
Channel Plate
240
242
244
246
4th Clutch
248
250
252
254
256
258
260
262
4th Clutch Hub
Chain
Driven
334
336
338
340
342
344
346
348
350
352
354
356
358
362
364
366
Input Drum
3rd Clutch
436
438
440
442
444
446
448
450
452
454
456
458
460
462
464
466
468
Forward Planet
Rear Planet
Reaction Drum
2-1 Coast Band
Forward Band Drum
Rear (Forward) Band
528
530
532
534
536
538
540
544
546
548
550
552
554
556
558
560
562
564
566
568
570
Case
Ext. Hsg.
656
658
660
662
664
665
666
668
686
Forward Servo
672
674
676
678
680
682
702
704
706
708

ILL.		Qty.	Year	Part #	Ref. #
MASTER OVERHAUL KITS (WITH STEELS)					
N.I.	440-T4	1	84-E86	84006	N.L.
N.I.	440-T4 Exc 87-93 Allante	1	L86-88	84006A	N.L.
N.I.	440-T4 Exc 87-93 Allante	1	89-93	84006B	N.L.
MASTER OVERHAUL KITS (LESS STEELS)					
N.I.	440-T4	1	84-E86	84004	N.L.
N.I.	440-T4 Exc 87-93 Allante	1	L86-88	84004A	N.L.
N.I.	440-T4 Exc 87-93 Allante	1	89-93	84004B	N.L.
OVERHAUL KITS (WITH RINGS AND SEALS)					
N.I.	440-T4 Exc 87-93 Allante	1	84-93	84002	N.L.
SUB KITS					
N.I.	Allante Sub Kit	1	87-93	84001	N.L.
BONDED PISTONS					
356C	Piston, 3rd Clutch (w/ Molded Rubber) (w/ Check Ball)	1	84-93	84965A	8682736
GASKETS & O-RINGS					
104A	Gasket, Side Cover (Outer)	1	84-93	84301	8656397
144A	Gasket, Valve Body to Spacer Plate	1	E1985	84321A	8656712
144A	Gasket, Valve Body to Spacer Plate	1	L85-93	84321AA	8662848
148A	Gasket, Valve Body Spacer Plate to Channel Plate	1	E1985	84320A	8656713
148A	Gasket, Valve Body Spacer Plate to Channel Plate	1	L85-93	84320AA	8656813
152A	Gasket, Upper Channel Plate	1	84-E85	84325B	8656037
152A	Gasket, Upper Channel Plate (One Piece Design)	1	L85-93	84325E	8668064
222A	Gasket, Side Case Cover (Inner)	1	84-93	84301J	8656398
240B	Gasket, Lower Channel Plate	1	84-93	84325	8649830
534E	O-Ring, 1-2 & Reverse Servo Cover	2	84-93	84364	8658111
620F	Lathe Cut Seal, 1-2 & 3-4 Accumulator Piston	2	84-93	54352A	8635568
636F	Gasket, Accumulator Cover	2	84-93	84308	8656073
654F	Gasket, Governor Control Body	1	84-93	84306	8656385
658F	Boot, Filler Tube	1	84-93	44371B	E2FZ-7N243A
702G	Seal, Filter Seal	1	84-93	84379	8656613
706G	Gasket, Bottom Pan	1	84-93	84300	8656396
N.I.	Gasket, Modulator Port	1	84-93	84327	8656002
N.I.	Boot, Detent Cable	1	84-93	54373B	1262476
N.I.	O-Ring, Converter Clutch Solenoid Screen	1	84-93	84376	8658109
METAL CLAD SEALS					
200A	Axle (Left Side Only)	1	84-93	84077	8679744
544E	Manual Lever (.350" Thick)	1	84-93	84072A	8644709
556E	Front	1	84-93	84070	24204772
570E	Axle (Right Side Only)	1	84-93	84076	24202835
604F	Speed-O Seal w/ Spring	1	84-93	44078A	1240382
604F	Speed-O Seal w/o Spring	1	84-93	44078X	1240382
SEALING RINGS & KITS					
N.I.	Ring Kit (2nd Clutch Metal Rings)	1	84-86	84175	N.L.
N.I.	Ring Kit (2 Vespel Rings & 2 Rubber Expanders)	1	87-93	84179KT	N.L.
FRICTION PLATES					
244B	4th Clutch (.090")	1	84-90	84100	8662172
244B	4th Clutch (.070")	2	91-93	84100A	8685066
332C	2nd Clutch (Grooved)	5-6	84-93	84104A	8685539
332C	2nd Clutch (Grooved) (Hi-Energy)	5-6	84-93	84104AH	N.L.
332C	2nd Clutch (Smooth) (Hi-Energy)	5-6	84-93	84104H	N.L.
366C	3rd Clutch (2 Sided) (Use w/ 84126 Steels)	4	84-86	84106	8658081
366C	3rd Clutch (.084") (1 Sided, 32 Internal Teeth)	4	84-88	84106A	8658042
366C	3rd Clutch (.082") (1 Sided, 32 Internal Teeth)	5	89-93	84106B	8668361
366C	3rd Clutch (.084") (1 Sided, 12 External Teeth)	4	84-88	84126AA	8658043
366C	3rd Clutch (.078") (1 Sided, 12 External Teeth)	5	89-93	84126AB	24200540
406D	Input Clutch	4	84-93	84108	8662850

ILL.		Qty.	Year	Part #	Ref. #
STEEL PLATES					
242B	4th Clutch	2	84-93	84120	8656767
328C	2nd Clutch (.044") (Waved)	1	84-93	84125	8658463
330C	2nd Clutch (.090")	3	84-86	84124	8656642
330C	2nd Clutch (.090") (Kolene)	5	84-86	84124C	8662309
330C	2nd Clutch (.077")	6	87-93	84124A	24203372
330C	2nd Clutch (.077") (Kolene)	6	87-93	84124D	24203372
362C	3rd Clutch (Waved)	1	88-93	84127	8656645
364C	3rd Clutch (Flat)	1	84-87	84126	8656313
404D	Input Clutch (.040") (Waved)	1	L90-93	64129	8652126
408D	Input Clutch (.076")	3	84-E90	64128	8631379
408D	Input Clutch (.050")	3-4	L90-93	84128	8651446
FRICTION & STEEL KITS					
N.I.	Friction & Steel Kit, 4th Clutch .090" (Bent Tooth) (1 Fri & 2 Steels)	1	84-90	A84100APK	N.L.
N.I.	Friction & Steel Kit, 4th Clutch .070" (Bent Tooth) (2 Fri & 2 Steels)	1	91-93	A84100BPK	62758-A
N.I.	Steel Module	1	89-93	84139B	N.L.
FILTERS					
136A	Screen, Oil Pump (with Tab)	1	84-93	84012	24208456
136A	Screen, Oil Pump (No Tab)	1	84-93	84012A	24208456
704G	Filter	1	84-93	84010	8662853
N.I.	Screen, TCC Solenoid Orifice	1	L85-93	84016PA	8658060
FILTER KITS					
N.I.	Filter Kit, 440-T4	1	84-93	84011	84011
BANDS					
312C	Reverse (Front)	1	84-93	84024	8675986
468D	1-2 (Rear)	1	84-93	84022A	8675987
BUSHINGS					
N.I.	Bushing Kit	1	84-93	84030	N.L.
198A	Stator Support Front	1	84-93	54036A	8628915
308C	Driven Sprocket Support	1	84-93	84045	8656357
314C	2nd Clutch Housing (Front)	1	84-93	84046B	8644098
318C	2nd Clutch Housing (Rear)	1	84-93	84046	8644099
340C	Input Drum (with 4 Oil Grooves)	1	84-93	84048A	8649661
436D	Front Planet	1	86-93	84053	8648803
450D	Rear Sun Gear (Front) (1-2 Band Drum)	1	84-93	84056	8644203
504E	Final Drive Internal Gear Shaft	2	84-93	84054	8649537
558E	Converter Hub	1	84-93	64032B	8637905
562E	Case	2-3	84-93	64060	8631119
THRUST WASHERS/BEARINGS					
WASHERS					
N.I.	Washer Kit (No Selectives)	1	84-93	84200	N.L.
176A	Drive Sprocket to Channel Plate	1	84-93	84278	8649260
184A	Drive Sprocket to Support	1	84-93	64279A	8652841
254B	4th Clutch Hub to Driven Sprocket	1	84-93	84280	8644664
258B	Driven Sprocket to Support (4 Legs)	1	84-93	84281	8644684
310C	Driven Sprocket Support to 2nd Clutch Drum	1	84-93	84226	8644069
338C	Input Drum 3.80-3.90mm (Brown)	1	84-93	84230EA	24204848
338C	Input Drum 4.10-4.20mm (Black)	1	84-93	84230H	24204850
338C	Input Drum 4.40-4.50mm (Purple-White)	1	84-93	84230J	24204852
348C	Input Drum Rear (4 Tang)	1	84-93	84232	8662370
N.I.	Washer Kit (with Popular Selectives)	1	84-93	84200B	N.L.
N.I.	Repair Kit, Final Drive Planet (8 Brass & 8 Steel Washers)	1	84-93	64204D	8637995
BEARINGS					
N.I.	Bearing Kit	1	84-93	84201A	N.L.
194A	Needle Converter Reactor (Presses Inside)	1	84-93	64295	8631186
248B	4th Clutch Hub to Channel Plate	1	84-93	84217	8656393
300C	Needle Driven Sprocket Support (Presses Inside)	1	84-93	84298	8644054
336C	2nd Clutch Drum to Input Drum	1	84-93	84229	8649704
432D	Sun Gear (Split, Inner) (1.750" Long)	1	84-90	84241	8649505

ILL.		Qty.	Year	Part #	Ref. #
BEARINGS (Cont.)					
432D	Sun Gear (Split, Inner) (.750" Long)	1	91-93	84241A	24201985
440D	Input (Captured)	1	84-93	84237	N.L.
444D	Front Planet to Rear Planet	1	84-93	84238	8646504
448D	Rear Planet to Sun Gear Drum	1	84-93	84251	8649353
502E	Reaction Drum to Internal Ring Gear	1	84-93	84257	8644206
508E	Park Gear to Ring Gear	1	84-93	84254	8644240
516E	Sun Gear to Differential Carrier (2.00" OD) 2.84 Ratio	1	84-93	54247A	8628962
516E	Sun Gear to Differential Carrier (2.125" OD) 3.06 Ratio	1	84-93	84247	8646254
524E	Spacer, Differential to Case 2.05mm (#6)	1	84-93	64293	8631426
524E	Spacer, Differential to Case 2.15mm (#7)	1	84-93	64293G	8631427
524E	Spacer, Differential to Case 2.25mm (#8)	1	84-93	64293H	8631428
524E	Spacer, Differential to Case 2.35mm (#9)	1	84-93	64293J	8631429
526E	Differential to Case	1	84-93	64292	8631362
N.I.	Pump Shaft	1	84-93	84209	8644516
N.I.	Repair Kit, Final Drive Planet (8 Brass & 8 Steel Washers)	1	84-93	64204D	8637995
ELECTRICAL COMPONENTS					
134A	Switch, 3rd Clutch Pressure (2 Prong)	1	84-93	84412A	8658039
126A	Switch, 4th Clutch Pressure (1 Prong)	1	84-93	84413	8658040
238B	Solenoid (TCC) (Universal)	1	84-93	84425	8633945
548E	Connector, Case (Square 4 Prong)	1	84-93	84444	8662395
548E	Connector, Case (Round 5 Prong Black)	1	84-93	64444A	8649507
548E	Connector, Case (Universal, Replaces 2, 3, 4 Prong Square)	1	84-93	84444U	8662395
VALVE BODY RECALIBRATION KITS					
N.I.	Shift Kit, Tri-Pack (Fixes 3 Transmissions) (Transgo)	1	84-93	T84165-3	SK® 440 3
N.I.	Shift Kit-Jr, 440-T4 Junior (Transgo)	1	84-93	T84167	SK® 440 JR
N.I.	Valve Body Kit (Superior)	1	84-93	S84165	K440-T4
VALVE BODY COMPONENTS					
N.I.	Anti Shudder Spring	1	84-93	A84741C-3	N.L.
N.I.	Repair Kit, Valve Body Plate with 1/4" Check Balls	1	84-93	VB-101	N.L.
N.I.	Spring Kit, Converter Clutch	1	84-93	84741C-3K	SGSF-440
N.I.	Valve, 3-2 Downshift	1	84-93	84741S-1	8656084
PUMP COMPONENTS					
N.I.	Pump Cover Sleeve	1	84-93	64541	8631288
110A	Ring, Pump Vane	2	84-93	84538	8644333
112A	Vane, Pump	9	84-93	84533AA	8644661
112A	Vane Kit, Pump (9 Vanes)	1	84-93	84533AAK-1	8644662
112A	Vane & Ring Kit, Pump (9 Vanes)	1	84-93	84533AAK	N.L.
114A	Rotor, Pump	1	84-93	84532AB	24207982
122A	Pin, Pivot Slide (No Groove)	1	84-93	84535	8649477
122A	Pin, Pivot Slide (Groove)	1	1993	84535A	8683624
124A	Slide, Pump 17.968mm	1	84-93	84534AB	8662901
196A	Converter Reactor (Stator Support)	1	84-93	64529A	8662523
DRUMS & COMPONENTS					
252B	4th Clutch Hub & Shaft	1	84-93	84570A	24201094
316C	2nd Clutch (5 Clutch)	1	84-86	84552A	8646929
316C	2nd Clutch (6 Clutch)	1	87-93	84552B	8661912
320C	Piston, 2nd Clutch Drum (5.125" OD)	1	84-93	84962E	8676387
344C	Forward, w/ Input Shaft (Washer Type)	1	84-87	84554A	8662975
344C	Forward, w/ Input Shaft (Bearing Type)	1	88-93	84554B	8662975
350C	Piston, Input Clutch (Converts to 10 Clutch if D84554B is Used)	1	84-93	84964B	24203479
356C	Piston, 3rd Clutch (w/ Molded Rubber) (w/ Check Ball)	1	84-93	84965A	8682736
452D	Reaction w/ Sun Gear	1	84-93	84558	8676144
PLANETS & COMPONENTS					
438D	Front (.350" Wide Bushing)	1	84-85	84582	8644940
438D	Front (.265" Wide Bushing)	1	86-93	84582A	24203693
446D	Rear	1	84-93	84584	24205127
506E	Ring Gear, Final Drive	1	84-89	84598	8668720
506E	Ring Gear, Final Drive	1	90-93	84598A	8631571

ILL.		Qty.	Year	Part #	Ref. #
SUN GEARS					
430D	Sun Gear, Input (Front)	1	84-93	84612	24208023
514E	Sun Gear, Final Drive 30 T	1	84-93	84618B	8644237
514E	Sun Gear, Final Drive 34 T	1	84-93	84618A	24209184
514E	Sun Gear, Final Drive 38 T	1	84-93	84618	8658040
ONE WAY CLUTCHES					
414D	Sprag, 3rd Clutch	1	84-93	84656	8662876
418D	Sprag Assembly, 3rd/ Low Input (84-Up if used w/ 84554B & 84232A)	1	87-93	84646A	8677016
422D	Sprag, Low Input	1	84-E86	84658	8658501
422D	Sprag, Low Input	1	L86-93	84658A	8662031
426D	Sprag, 3rd/ Low Input	1	L86-93	84648A	8646985
SHELLS & SUPPORTS					
434D	Shell, Reverse Reaction (Hardened)	1	84-93	84624	24221583
SHAFTS					
190A	Turbine Shaft	1	84-93	84673	8652646
220A	Pump Shaft, Oil Pump Drive (9.750" Long)	1	84-93	84671	8656624
VALVE BODIES & GOVERNORS					
140A	Valve Body (Small Check Balls Only)	1	84-E85	84740	N.L.
140A	Valve Body (Large & Small Check Balls)	1	L85-93	84740A	24201216
DIFFERENTIALS					
500E	Final Drive Sun Gear Shaft (No Lube Dam)	1	84-E85	84674	8649543
500E	Final Drive Sun Gear Shaft (w/ Lube Dam)	1	L85-93	84674A	8661020
506E	Ring Gear, Final Drive	1	84-89	84598	8668720
506E	Ring Gear, Final Drive	1	90-93	84598A	8631571
522E	30T Sun Gear, 20T Pinion, 3.33 Ratio	1	84-93	64715D	N.L.
522E	34T Sun Gear, 18T Pinion, 3.06 Ratio	1	84-93	64715C	N.L.
522E	38T Sun Gear, 16T Pinion, 2.84 Ratio	1	84-93	64715	N.L.
MISCELLANEOUS COMPONENTS					
180A	Chain (Exc Allante)	1	84-93	84700A	8660099
554E	Modulator, Red Stripe (Dual Line)	1	84-93	84160R	8646956
442D	Oil Dam, Front Planet	1	84-93	84698	8658368
N.I.	Sleeve, Channel Plate (Presses In Channel Plate)	1	84-93	84755S	8656077
N.I.	Retainer, 3-2 Line Control Valve (In Channel Plate)	1	84-93	84755V-4	8658678
SERVOS & ACCUMULATORS					
160A	Spring, 3-4 Accumulator (Orange or Blue)	1	84-93	84936	8646399
602F	Cover, 1-2 & 3-4 Accumulator (Cast # 8677163)	1	84-93	84929	8656740
628F	Spring, 1-2 Accumulator (Orange/Green)	1	84-93	84926	8668487
628F	Spring, 1-2 Accumulator (Plain Colored)	1	84-93	84926B	8649091
632F	Piston, 1-2, 3-4 Accumulator (Deep w/o Spring Recess) (Aluminum)	1	84-93	84927	8651927
632F	Piston, 1-2, 3-4 Accumulator (Aluminum Replacement) (Transgo®)	1	84-93	A84927	8651927
632F	Piston Kit, Accumulator 1-2, 3-4 (2 Pistons, 1 Spring, 1 Spacer) (Transgo®)	1	84-93	84927EK	4T60-ACM2
632F	Piston, 1-2, 3-4 Accumulator (Deep w/o Spring Recess) (Aluminum)	1	84-93	84927	8651927
632F	Piston Kit, Accumulator 1-2, 3-4 (2 Pistons, 1 Spring, 1 Spacer) (Transgo®)	1	84-93	84927EK	4T60-ACM2
662F	Pin, 1-2 Servo (2.215") 1 Ring & 1 Wide Band	1	84-93	84908	84572E
662F	Pin, Servo Extendo Fits Both Servos (Teckpak)	1	84-93	T84908	N.L.
TECHNICAL MANUALS					
N.I.	Technical Manual, 440-T4	1	84-93	84400	83-440TTM
N.I.	Technical Manual, 440-T4 Update Volume 1 1986	1	86-93	84400H1	83-440TTM-U1
N.I.	Technical Manual, 440-T4 Update Volume 2 1990	1	90-93	84400H2	83-440TTM-U2
N.I.	Transmission Guide (GM)	1	84-93	84400EA	TMG-4T60
TOOLS					
N.I.	Input Shaft Teflon Seal Installer	1	84-93	T-2004	N.L.

ILL.		Qty.	Year	Part #	Ref. #
DELUXE KITS (SUPER KITS WITH STEELS)					
N.I.	4T60E (w/ Pistons)	1	91-99	84008EBPW	N.L.
N.I.	4T65E (w/ Pistons) (w/ Sprag Type Input Clutch) (Exc Volvo)	1	97-02	84008GPW	N.L.
N.I.	4T65E (w/ Pistons) (w/ Pawl Type Input Clutch) (Exc Volvo)	1	03-Up	84008HPW	N.L.
MASTER OVERHAUL KITS (WITH STEELS)					
N.I.	4T60E (w/ Pistons)	1	91-99	84006EBPW	N.L.
N.I.	4T65E (w/ Pistons) (Volvo Only)	1	99-Up	84006GAPW	N.L.
N.I.	4T65E (w/ Pistons) (w/ Sprag Type Input Clutch) (Exc Volvo)	1	97-02	84006GPW	N.L.
N.I.	4T65E (w/ Pistons) (w/ Pawl Type Input Clutch) (Exc Volvo)	1	03-Up	84006HPW	N.L.
MASTER OVERHAUL KITS (LESS STEELS)					
N.I.	4T60E (w/ Pistons)	1	91-99	84004EBPW	N.L.
N.I.	4T65E (w/ Pistons) (Volvo Only)	1	99-Up	84004GAPW	N.L.
N.I.	4T65E (w/ Pistons) (w/ Sprag Type Input Clutch) (Exc Volvo)	1	97-02	84004GPW	N.L.
N.I.	4T65E (w/ Pistons) (w/ Pawl Type Input Clutch) (Exc Volvo)	1	03-Up	84004HPW	N.L.
OVERHAUL KITS (WITH RINGS AND SEALS)					
N.I.	4T60E (w/o Pistons)	1	91-99	84002EW	N.L.
N.I.	4T65E (Exc Volvo)(w/o Pistons)	1	97-Up	84002GW	N.L.
N.I.	4T65E (Volvo)(w/o Pistons)	1	99-Up	84002GAW	N.L.
	Bonded Side Cover Gasket not included in kits. Order separate sub kit for Volvo/GM tap shift.				
SUB KITS					
N.I.	4T65E (GM Awd Transfer Case)	1	97-Up	84001B	N.L.
N.I.	4T65E (Volvo) (Incl VB Gaskets, Axle Seals, 4th Clutches)	1	99-Up	84001G	N.L.
N.I.	4T65E (GM Tap Shift) (Incl VB Gaskets, 4th Clutches)	1	04-Up	84001H	N.L.
BONDED PISTONS					
N.I.	Piston Kit, 4T60E	1	91-99	84960A	N.L.
N.I.	Piston Kit, 4T65E	1	97-Up	84960B	N.L.
320C	Piston, 2nd Clutch (Bonded) (5 1/8" OD) (4T60E)	1	91-99	84962E	8676387
320C	Piston, 2nd Clutch (Bonded) (5 3/8" OD) (4T65E)	1	97-Up	84962G	24208336
356C	Piston, 3rd Clutch (Bonded) (w/ Check Ball)	1	91-E98	84965A	8682736
356C	Piston, 3rd Clutch (Bonded) (No Ck Ball)	1	97-Up	84965G	24205378
GASKETS & O-RINGS					
104A	Side Cover (Outer) (4T60E) (Cork)	1	91-93	84301	8656397
104A	Side Cover (Outer) (4T60E) (Fiber)	1	91-93	84301F	8656397
104A	Side Cover (Outer) (4T60E) (Bonded)	1	94-99	84301E	24201064
104A	Side Cover (Outer) (4T65E) (Bonded)	1	97-Up	84301GW	24206959
144A	Gasket, Valve Body to Spacer Plate (4T60E)	1	91-92	84321B	8678761
144A	Gasket, Valve Body to Spacer Plate (4T60E)	1	93-99	84321BA	8682280
144A	Gasket, Valve Body to Spacer Plate (4T65E)	1	97-Up	84321G	24206578
148A	Gasket, Valve Body Spacer Plate to Channel Plate (4T60E)	1	91-92	84320B	8678761
148A	Gasket, Valve Body Spacer Plate to Channel Plate (4T60E)	1	93-99	84320BA	8682280
148A	Gasket, Valve Body Spacer Plate to Channel Plate (4T65E)	1	97-Up	84320G	24204500
148A	Gasket, Valve Body Separator Plate (Bonded) (4T65E)	1	99-03	84320K	24217553
148A	Gasket, Valve Body Separator Plate (Bonded) (4T65E) GM	1	04-Up	84320M	24237263
148A	Gasket Kit, Valve Body (4T65E) Volvo/Tap Shift	1	99-Up	84320GAK	N.L.
152A	Gasket, Upper Channel Plate (4T60E)	1	91-99	84325E	8668064
152A	Gasket, Upper Channel Plate (4T65E)	1	97-Up	84325H	24204503
192A	O-Ring, Turbine Shaft	1	91-Up	64380	8636033
222A	Side Cover (Inner) (4T60E)	1	91-93	84301J	8656398
222A	Side Cover (Inner) (4T60E) (Lathe Cut)	1	94-99	84301LA	24200061
222A	Side Cover (Inner) (4T65E) (Lathe Cut)	1	97-Up	84301GA	24205119
240B	Gasket, Lower Channel Plate (4T60E)	1	91-99	84325A	8651615
240B	Gasket, Lower Channel Plate (4T65E)	1	97-Up	84325J	24204504
534E	O-Ring, Reverse Servo Cover (4T60E)	1	91-Up	84364	8658111
534E	O-Ring, Reverse Servo Cover (4T65E)	1	97-Up	84364C	N.L.
534E	O-Ring, Forward Servo Cover (4T60E)	1	91-Up	84364B	8651567
560E	Lathe Cut Seal, Extension Housing to Case	1	91-Up	84348	8651419
620F	Lathe Cut Seal, 1-2 & 3-4 Accumulator Piston	2	91-Up	54352A	8635568
636F	Gasket, Accumulator Cover (w/ Spacer Plate) (4T60E)	1	91-99	84308A	8682085
636F	Gasket, Accumulator Cover (w/ Spacer Plate) (4T65E)	1	97-Up	84308G	24205621
658F	Boot, Filler Tube	1	91-Up	44371B	E2FZ-7N243A
702G	Seal, Filter Seal	1	91-Up	84379	8656613

ILL.		Qty.	Year	Part #	Ref. #
GASKETS & O-RINGS (Cont.)					
706G	Bottom Pan (Cork) (4T60E)	1	91-99	84300E	8668028
706G	Bottom Pan (Fiber) (4T60E)	1	91-99	84300EF	8668028
706G	Bottom Pan (Bonded) (8mm Pan Bolts)	1	91-98	84300EW	24204624
706G	Bottom Pan (Bonded) (6mm Pan Bolts)	1	L98-Up	84300EAW	24206182
N.I.	Seal, 1-2 Servo Cover (4T65E)	1	97-Up	84360	N.L.
N.I.	Clip, Cooler Line Fitting (Push-In Fittings)	1	91-Up	74496A	24205103
N.I.	O-Ring, Cooler Line Fitting (Push-In Fittings)	1	91-Up	74378	N.L.
METAL CLAD SEALS					
200B	Axle (Left Side Only) (4T60E)	1	91-99	84077	8679744
200B	Axle (Left Side Only) (4T65E)	1	97-Up	84077G	24204330
544E	Manual Lever	1	91-Up	84072A	8644709
556E	Front	1	91-Up	84070	24204772
570E	Axle (Right Side Only) (Exc Awd and 4T65E Volvo)	1	91-Up	84076	24202835
570E	Axle (Right Side) (Awd)	1	97-Up	84076C	N.L.
570E	Axle (Right Side) (4T65E Volvo)	1	97-Up	84076GA	9445681
SEALING RINGS & KITS					
N.I.	Ring Kit (4T60E) (For L98-99, requires 2 of 84179AT)	1	91-99	84175E	N.L.
N.I.	Ring Kit (4T65E) (For 97-E98, requires 84179KT)	1	L98-Up	84175G	N.L.
N.I.	Ring Kit, 2nd Clutch (2 Vespel Rings & 2 quad rings)	1	91-E98	84179KT	N.L.
304C	2nd Clutch (4T65E) (.100" Wide Plastic)	2	L98-Up	84179AT	24209498
FRICTION PLATES					
242B	4th Clutch (1 Sided, External Teeth) (4T65E) (Volvo & 05-Up GM Tap Shift)	2	99-Up	84120GA	N.L.
244B	4th Clutch (18T) (4T60E)	2	91-99	84100A	8685066
244B	4th Clutch (32T) (4T65E)	2	97-Up	84100G	24213074
244B	4th Clutch (1 Sided, Internal Teeth) (4T65E) (Volvo & 05-Up GM Tap Shift)	2	99-Up	84100GA	N.L.
332C	2nd Clutch (38T) (4T60E)	5-6	91-99	84104A	8685539
332C	2nd Clutch (38T) (4T60E) (Hi-Energy)	5-6	91-99	84104AH	8685539
332C	2nd Clutch (42T) (4T65E)	6	97-Up	84104G	24205361
364C	3rd Clutch (.078") (1 Sided, 12 External Teeth)	5	91-Up	84126AB	24200540
364C	3rd Clutch (.078") (1 Sided, 12 External Teeth) (Hi-Energy)	5	01-Up	84126C	24216288
366C	3rd Clutch (.080") (1 Sided, 32 Internal Teeth)	5	91-Up	84106B	8668361
366C	3rd Clutch (.082") (1 Sided, 32 Internal Teeth) (Hi-Energy)	5	01-Up	84106C	24216287
406D	Input Clutch (.090") (32T)	4	91-E94	84108	8662850
406D	Input Clutch (.065") (32T)	4	L94-02	84108A	24202333
406D	Input Clutch (30T) (with Pawl Type Input Clutch)	4	03-Up	84108B	24216502
STEEL PLATES					
242B	4th Clutch (.077") (5T) (4T60E)	2	91-99	84120	8656767
242B	4th Clutch (.083") (3T) (4T65E)	2	97-Up	84120G	24208013
328C	2nd Clutch (.044") (34T) (4T60E) (Waved)	1	91-99	84125	8658463
328C	2nd Clutch (.065") (36T) (4T65E) (Waved)	1	97-Up	84125G	24202950
330C	2nd Clutch (.077") (34T) (4T60E)	6	91-99	84124A	24203372
330C	2nd Clutch (.077") (34T) (4T60E) (Kolene)	6	91-99	84124D	24203372
330C	2nd Clutch (.068") (36T) (4T65E)	5	97-Up	84124G	24204104
330C	2nd Clutch (.090") (36T) (4T65E)	AR	97-Up	84124GA	N.L.
362C	3rd Clutch (.030") (4T60E) (Waved)	1	91-99	84127	8656645
364C	3rd Clutch (.090") (4T60E)	1	91-99	84126	8656313
404D	Input Clutch (.040") (Waved)	1	91-Up	64129	8652126
408D	Input Clutch (.076")	3-4	91-Up	64128	8631379
408D	Input Clutch (.050")	4	91-Up	84128	8651446
FRICTION & STEEL KITS					
N.I.	4th Clutch .070" (Bent Tooth) (2 Fri. & 2 Thin Steels)	1	91-92	A84100BPK	62758-A
N.I.	4th Clutch .070" (Bent Tooth) (2 Fri, 2 Thin & 1 Thick Steel)	1	93-99	A84100BAPK	8662172
N.I.	2nd Clutch .060" (Power Pack) (7 Fri, 6 Thin & 1 Thick Steel)	1	91-99	A84104CPK	N.L.
PRESSURE PLATES					
246B	4th Clutch (.160") (4T60E)	1	91-92	84140A	8661004
246B	4th Clutch (.135") (4T60E)	2-3	93-99	84140B	8680771
246B	4th Clutch (.128") (4T65E)	1	97-Up	84140G	24208014
326C	2nd Clutch Apply (Flat) (Bottom) (.150") (4T60E)	1	91-99	84145A	8680367
326C	2nd Clutch Apply Plate (.130") (4T60E)	1	91-99	84146B	N.L.
326C	2nd Clutch Apply (.152") (4T65E)	1	97-Up	84148C	24204103

ILL.		Qty.	Year	Part #	Ref. #
PRESSURE PLATES (Cont.)					
334C	2nd Clutch Backing (Beveled) (.390") (4T60E)	1	91-99	84144D	8683425
334C	2nd Clutch (.227") (4T65E)	1	97-Up	84144E	24204105
400D	3rd Clutch Backing (.150")	1	91-Up	84146A	8658083
402D	Input Clutch Apply (.190") (Bottom)	1	91-Up	84149	8682801
410D	Input Clutch Backing (.190") (Top)	1	91-Up	84148	8658146
FILTERS					
136A	Screen, Oil Pump (No Tab)	1	91-Up	84012A	24208456
656F	Screen, Manual 2-1 Servo	1	91-Up	84017A	8651754
704G	Filter	1	91-Up	84010E	24205416
N.I.	Screen, Shift Solenoid	3-4	91-Up	84016E	8651658
N.I.	Screen, TCC Orifice	1	91-Up	84016PA	8658060
FILTER KITS					
N.I.	Filter Kit	1	91-Up	84011EF	N.L.
BANDS					
312C	Reverse (Front)	1	91-Up	84024A	8651653
312C	Reverse (Front) (Hi-Energy)	1	01-Up	84024G	24213362
456D	2-1 Coast (Center)	1	91-Up	84026A	8685155
456D	2-1 Coast (Center) (Hi-Energy)	1	04-Up	84026G	8651624
468D	Forward (Rear)	1	91-Up	84022E	8651614
468D	Forward (Rear) (Hi-Energy)	1	01-Up	84022G	24213361
BUSHINGS					
N.I.	Bushing Kit, 4T60E	1	91-99	84030E	N.L.
N.I.	Bushing Kit, 4T65E	1	97-Up	84030G	N.L.
198A	Stator Support Front	1	91-Up	54036A	8628915
308C	Driven Sprocket Support	1	91-Up	84045	8656357
314C	2nd Clutch Housing (Front)	1	91-Up	84046B	8644098
318C	2nd Clutch Housing (Rear)	1	91-Up	84046	8644099
340C	Input Drum (w/ Oil Grooves)	1	91-Up	84048A	8649661
436D	Front Planet (4T60E Only)	1	91-99	84053	8648803
450D	Rear Sun Gear (Forward Band Drum) (Wide Front Bushing)	1	91-Up	84056AA	8651447
454D	Rear Sun Gear (Forward Band Drum) (Narrow Rear Bushing)	1	91-Up	84056AB	8651448
466D	2-1 Coast Drum (11/16" Wide) (Center Band Drum)	1	91-95	84056AA	8651447
466D	2-1 Coast Drum (1.250" Wide) (Center Band Drum)	1	96-Up	84061B	N.L.
504E	Final Drive Internal Gear Shaft	2	91-Up	84054	8649537
558E	Converter Hub	1	91-Up	64032B	8637905
562E	Case Bushing	1	91-Up	64060	8631119
562E	Extension Housing (Bearing)	1	91-Up	84275H	N.L.
THRUST WASHERS/BEARINGS					
WASHERS					
N.I.	Washer Kit (4T60E) (w/ Popular Selectives)	1	91-99	84200B	N.L.
N.I.	Washer Kit (4T65E)	1	97-Up	84200G	N.L.
176A	Drive Sprocket to Channel Plate (4T60E)	1	91-99	84278	8649260
176A	Drive Sprocket to Channel Plate (4T65E)	1	97-Up	84278G	24204328
184A	Drive Sprocket to Support (4T60E)	1	91-99	64279A	8652841
184A	Drive Sprocket to Support (3 Round Solid Tabs) (4T65E)	1	97-00	84279G	24205121
184A	Drive Sprocket to Support (3 Split Locking Tabs) (4T65E)	1	01-Up	84279H	24213762
248B	4th Hub to Case Cover (3 Tabs) (4T65E)	1	97-Up	84263G	24207063
254B	4th Clutch Hub to Driven Sprocket (4T60E)	1	91-99	84280	8644664
254B	4th Clutch Hub to Driven Sprocket (4T65E)	1	97-Up	84280G	24204839
258B	Driven Sprocket to Support (4 Legs) (4T60E)	1	91-99	84281	8644684
258B	Driven Sprocket to Support (3 Legs) (4T65E)	1	97-Up	84281G	24204840
310C	Driven Sprocket Support to 2nd Clutch Drum (4T65E)	1	97-Up	84226G	24204434
310C	Driven Sprocket Support to 2nd Clutch Drum (4T60E)	1	91-99	84226	8644069
338C	Input Drum (3.05-3.15mm) (Orange-Black)	1	91-Up	84230A	24204843
338C	Input Drum (3.35-3.45mm) (White)	1	91-Up	84230C	24204845
338C	Input Drum (3.65-3.75mm) (Pink)	1	91-Up	84230E	24204847
338C	Input Drum (3.95-4.05mm) (Green)	1	91-Up	84230G	24204849
338C	Input Drum (4.25-4.35mm) (Purple)	1	91-Up	84230HA	8658172
502E	Reaction Drum to Internal Ring Gear	1	91-96	84257	8644206
502E	Reaction Drum to Internal Ring Gear	1	96-Up	84257B	24200584

ILL.		Qty.	Year	Part #	Ref. #
BEARINGS					
N.I.	Bearing Kit (Thrust)	1	91-Up	84201A	N.L.
158A	Pump Shaft	1	91-99	84209	8644516
194A	Converter Reactor (Presses Inside) (Needle Bearing)	1	91-Up	64295	8631186
248B	4th Clutch Hub to Channel Plate	1	91-99	84217	8656393
300C	Driven Sprocket Support (Presses Inside) (Needle Bearing)	1	91-Up	84298	8644054
336C	2nd Clutch Drum to Input Drum	1	91-Up	84229	8649704
348C	Input Drum Rear	1	91-Up	84232A	8668422
432D	Axle Shaft (Split, Inner) (.750" Long)	1	91-6/93	84241A	24201985
440D	Input Planet (Captured)	1	97-Up	84237	N.L.
444D	Front Planet to Rear Planet	1	91-Up	84238	8646504
448D	Rear Planet to Sun Gear Drum	1	91-Up	84251	8649353
462D	1-2 Sprag to Forward Band Drum	1	91-95	54242AA	8648389
462D	1-2 Sprag to Forward Band Drum	1	96-Up	84286C	7471026
508E	Internal Gear to Part Gear	1	91-95	84254	8644240
508E	Internal Gear to Part Gear	1	96-Up	84254A	24202794
516E	Sun Gear to Differential Carrier (2.000" OD)	1	91-Up	54247A	8628962
516E	Sun Gear to Differential Carrier (2.125" OD)	1	91-Up	84247	8646254
516E	Sun Gear to Differential Carrier (2.190" OD)	1	91-Up	84247B	24211390
516E	Sun Gear to Differential Carrier (2.350" OD)	1	L00-Up	84247A	24202396
526E	Differential to Case (w/o Bearing Housing)	1	91-Up	64292	8631362
526E	Differential to Case (w/ Bearing Housing)	1	91-Up	84257	8644206
562E	Extension Housing (Bearing) (4T65E)	1	97-Up	84275H	N.L.
N.I.	Channel Plate (Axle) (4T65E)	1	97-Up	84299H	24203440
SHIMS AND SPACERS					
524E	Spacer, Differential to Case 1.95mm (#5)	1	91-Up	64293E	8631425
524E	Spacer, Differential to Case 2.05mm (#6)	1	91-Up	64293	8631426
524E	Spacer, Differential to Case 2.15mm (#7)	1	91-Up	64293G	8631427
524E	Spacer, Differential to Case 2.25mm (#8)	1	91-Up	64293H	8631428
524E	Spacer, Differential to Case 2.35mm (#9)	1	91-Up	64293J	8631429
ELECTRICAL COMPONENTS					
126A	4th Clutch Pressure Switch (1 Prong)	1	91-99	84413A	8668708
134A	Switch, Pump TCC Pressure (1 Prong N.O.)	1	91-99	74411B	8642473
150A	Sensor, Input Speed (TSS) (4T65E) (Exc 99-Up Volvo)	1	97-Up	84438G	10456509
150A	Sensor, Input Speed (TSS) (4T65E) (99-Up Volvo)	1	99-Up	84438GA	N.L.
230A	Switch, Manifold (Pressure Range Sensor) (4T65E) (4 Prong)	1	97-02	84442G	24203699
230A	Switch, Manifold (Pressure Range Sensor) (4T65E) (1 Prong) (1 Switch)	1	03-Up	84442H	24216426
236B	Solenoid, EPC (4T65E) (Holley)	1	97-02	84431G	31752-KA001
236B	Solenoid, EPC (4T65E) (Bosch)	1	03-Up	84431H	24225825
238B	Solenoid, Lock-Up (TCC) (4T60E)	1	91-99	84421	24202614
238B	Solenoid, Lock-Up (TCC) (4T65E)	1	97-Up	74418E	24227747
238B	Solenoid, TCC PWM	1	91-99	84418A	8683535
238B	Solenoid, 1-2, 3-4 Shift (4T60E)	2	91-99	84421	24202614
238B	Solenoid, 1-2, 3-4 Shift (4T65E)	2	97-Up	84421G	10478124
528E	Switch, MLPS (1 Connector w/ 7 Pins, 1 w/ 4 Pins)	1	96-Up	84410HA	12450157
528E	Switch, MLPS (Internal Mode Switch) (1 Connector w/ 6 Pins)	1	99-Up	84410H	24230112
548E	Connector (Round 7 Prong)	1	94-99	84444C	24216981
566E	Sensor, Output Speed (VSS) (4T60E)	1	91-99	84436A	10456034
566E	Sensor, Output Speed (VSS) (4T65E) (Short Connector 2" Tall)	1	97-99	84436A	10456034
566E	Sensor, Output Speed (VSS) (4T65E) (Long Connector)	1	99-Up	84436G	10456568
566E	Sensor, Output Speed (VSS) (4T65E) (Volvo) (Metal Bracket)	1	99-E02	84436J	9445688
566E	Sensor, Output Speed (VSS) (4T65E) (Volvo) (Molded Bracket)	1	L02-Up	84436K	8689623
600F	Wire Harness, Internal (4T60E) (w/o PWM Lock-Up)	1	91-93	84446E	12082981
600F	Wire Harness, Internal (4T60E) (w/o PWM Lock-Up)	1	91-93	84446EA	12082980
600F	Wire Harness, Internal (4T60E) (All 4T60E 94-99)	1	94-99	84446EC	12143000
600F	Wire Harness, Internal (4T65E) (Universal - Replaces 14, 16, 17 & 19 Pin)	1	97-Up	84446HB	T84446G
600F	Wire Harness, Internal (4T65E) (14 Pin Connector)	1	97-Up	84446G	12173217
600F	Wire Harness, Internal (4T65E) (17 Pin Connector)	1	03-Up	84446HA	24219469
600F	Wire Harness, Internal (4T65E) (19 Pin Connector)	1	00-Up	84446H	24221901
N.I.	Wiring Harness (External Repair) (Universal 20 Pin) (4T65E) (GM)	1	97-Up	74445U	N.L.
N.I.	Repair Kit, External Wire Harness (4T60E)	1	91-93	84445K	N.L.
N.I.	Repair Kit, External Wire Harness (4T60E)	1	94-98	84445AK	N.L.
N.I.	Repair Kit, Speed Sensor Connector (4T60E)	1	91-99	74446CK	PT1798

ILL.		Qty.	Year	Part #	Ref. #
VALVE BODY RECALIBRATION KITS					
N.I.	Shift Kit-Jr®, 4T60E Junior (Transgo®)	1	91-99	T84167E	SK® 4T60E JR
N.I.	Shift Kit® (4T65E) (w/o Tap Shift) (Transgo®)	1	97-08	T84167G	SK® 4T65E
N.I.	Sure Cure Kit (4T60E) (Sonnax)	1	93-96	S84174	SC-4T60E
N.I.	Sure Cure Kit (4T60E) (Sonnax)	1	97-99	S84174A	SC-4T60E-1
N.I.	Sure Cure Kit (4T65E) (Sonnax)	1	97-Up	S84174G	SC-4T65E
PUMPS					
130A	Pump (No Switches) (4T60E)	1	91-94	84500E	24202302
130A	Pump (No Switches) (4T60E)	1	95-99	84500ED	24212226
130A	Pump (2 Switches) (4T60E) No Brass Air Bleed)	1	91-94	84500EB	N.L.
130A	Pump, Without Pump Rotor Support (4T65E) (Cast # 24206183)	1	97-02	84500G	24212429
130A	Pump, w/ Pump Rotor Support (4T65E)	1	02-Up	84500H	24225894
PUMP COMPONENTS					
110A	Ring, Pump Vane	2	91-Up	84538	8644333
112A	Vane Kit, Pump (9 Vanes) (4T60E)	1	91-99	84533AAK-1	8644662
112A	Vane Kit, Pump (11 Vanes) (4T65E)	1	97-Up	84533ABK-1	8644662
114A	Rotor, Pump (2 Piece Pump Design)	1	95-02	84532EA	24207981
114A	Rotor, Pump (3 Piece Pump Design)	1	03-Up	84532G	24222718
114A	Rotor Kit, Pump (2 Piece Pump Design)	1	95-02	84532EAK	N.L.
122A	Pin, Pivot Slide (No Groove)	1	91-93	84535	8649477
122A	Pin, Pivot Slide (w/ Groove)	1	93-Up	84535A	8683624
124A	Slide, Pump 17.968mm	1	91-Up	84534AB	8662901
196A	Converter Reactor (4T60E)	1	91-99	84529B	24205183
196A	Converter Reactor (4T65E)	1	97-Up	84529G	24211875
DRUMS & COMPONENTS					
252B	4th Clutch Hub & Shaft With Bearing	1	L93-95	84570A	24201094
252B	4th Clutch Hub & Shaft Without Bearing	1	96-99	84570B	24202037
252B	4th Clutch Hub & Shaft (32T) (4T65E)	1	97-Up	84570G	24205603
316C	2nd Clutch (4T60E) (6 Clutch)	1	91-99	84552C	24221109
316C	2nd Clutch (4T65E) (25 Degree Splines)	1	97-Up	84552G	24213402
316C	2nd Clutch (4T65E) (10 Degree Splines)	1	98-Up	84552GA	24212951
320C	Piston, 2nd Clutch (Bonded) (5 1/8" OD) (4T60E)	1	91-99	84962E	8676387
320C	Piston, 2nd Clutch (Bonded) (5 3/8" OD) (4T65E)	1	97-Up	84962G	24208336
344C	Forward w/ Input Shaft (4T60E) (w/ Caged Bearing Inside)	1	L93-99	84554C	8651937
344C	Forward w/ Input Shaft (4T65E) (w/ Caged Bearing Inside)	1	97-Up	84554G	24211855
356C	Piston, 3rd Clutch (Bonded) (w/ Check Ball)	1	91-E98	84965A	8682736
356C	Piston, 3rd Clutch (Bonded) (No Ck Ball)	1	97-Up	84965G	24205378
452D	Reaction Drum w/ Sun Gear 2.750" Tall	1	91-95	84558A	8651450
452D	Reaction Drum w/ Sun Gear 3.250" Tall	1	96-Up	84558B	24201902
464D	Forward Band Drum (16 Roller Type Sprag)	1	91-95	84559	7471030
464D	Forward Band Drum (14 Roller Type Sprag)	1	96-Up	84559B	7471027
PLANETS & COMPONENTS					
438D	Front (No Bushing) (4T60E)	1	91-99	84582B	8679000
438D	Front (No Bushing) (4T65E) (12 Outer Lugs)	1	97-Up	84582G	24204430
446D	Rear	1	91-Up	84584	24205127
SUN GEARS					
428D	Spacer, Input Sun Gear .350"	1	91-E93	84619A	8658797
428D	Spacer, Input Sun Gear .338"	1	L93-99	84619B	8682442
430D	Sun Gear, Input (Front)	1	91-E93	84612	24208023
430D	Sun Gear, Input (Front)	1	L93-Up	84612A	24208023
ONE WAY CLUTCHES					
414D	Roller, 3rd Clutch	1	91-E93	84656	8662876
418D	Sprag Assembly, 3rd/ Low Input (4T60E)	1	91-E93	84646A	8677016
418D	Sprag Assembly, 3rd/ Low Input (4T60E, 4T65E)	1	L93-02	84646BK	24204035
418D	Sprag Assembly, 3rd (4T65E)	1	03-Up	84646D	24216517
422D	Sprag, Low Input	1	91-E93	84658A	8662031
426D	Sprag Assembly, Input (4T65E)	1	03-Up	84648D	24216816
458D	Roller, Forward (16 Rollers)	1	91-95	44654	6261305
458D	Roller, Forward (14 Roller, Plastic Cage)	1	96-02	84652A	7471007
460D	Inner Race, 1-2 Roller	1	91-95	84664	7471031

ILL.		Qty.	Year	Part #	Ref. #
SHELLS & SUPPORTS					
434D	Shell, Reverse Reaction (4T60E) (Hardened)	1	91-99	84624	24221583
434D	Shell, Reverse Reaction (4T65E) (10 Degree Splines) (97-Up use w/ 84552GA)	1	98-Up	84624BA	24209481
SHAFTS					
190A	Turbine Shaft (6.00" Long) (4T60E)	1	91-99	84673A	24202468
190A	Turbine Shaft (6.25" Long) (4T65E)	1	97-Up	84673G	24208853
220A	Pump Shaft, Oil Pump Drive (9.750" Long) (4T60E)	1	91-99	84671	8656624
220A	Pump Shaft, Oil Pump Drive (10" Long) (4T65E)	1	97-Up	84671G	24209284
228B	Output Shaft (19.50") (No Bearing Under 4th Clutch Hub) (4T60E)	1	L93-99	84678E	8683560
228B	Output Shaft (4T65E)	1	97-Up	84678H	N.L.
500E	Final Drive Sun Gear Shaft (6.250" Long)	1	91-Up	84674B	8658408
VALVE BODIES & GOVERNORS					
140A	Valve Body (4T60E)	1	91-92	84740-4	N.L.
140A	Valve Body (4T60E)	1	93-99	84740-1	N.L.
140A	Valve Body (4T65E) (Volvo)	1	97-02	84740-7	N.L.
140A	Valve Body (4T65E) (Holley Solenoid, 2 Pc Pump Type) (Exc Volvo)	1	97-02	84740-2	N.L.
140A	Valve Body (4T65E) (Holley Solenoid, 3 Pc Pump Type) (Exc Volvo)	1	2002	84740-5	N.L.
140A	Valve Body (4T65E) (Bosch Solenoid, 2 Pc Pump Type) (Exc Volvo)	1	2003	84740-6	N.L.
140A	Valve Body (4T65E) (Bosch Solenoid, 3 Pc Pump Type) (Exc Volvo)	1	2003	84740-3	N.L.
140A	Valve Body (4T65E) (Volvo & GM Tap Shift Type)	1	04-Up	84740-8	N.L.
140A	Valve Body (4T65E) (GM Non Tap Shift Type)	1	04-Up	84740-3	N.L.
CHANNEL PLATES					
204A	Channel Plate (4T60E) (Cast # 217)	1	93-94	84755HA	N.L.
204A	Channel Plate (4T60E) (Cast # 657)	1	91-99	84755JB	N.L.
204A	Channel Plate (4T60E) (Cast # 657)	1	91-99	84755JC	N.L.
204A	Channel Plate (4T65E) (Cast # 479)	1	97-Up	84755P	N.L.
N.I.	Sleeve, Channel Plate (Presses In Channel Plate) (4T60E)	1	91-99	84755S	8656077
N.I.	Sleeve, Channel Plate (Presses In Channel Plate) (4T65E)	1	97-Up	A84755SA	8656077
CHAINS AND SPROCKETS					
178A	Reluctor, Input (3 Mounts to Drive Sprocket) (25T)	1	97-Up	84477B	24212217
180A	Chain (4T60E) (Round Pin 7/8" Wide)	1	91-93	84700A	8660099
180A	Chain (4T60E) (Rocker Joint Pins)	1	93-99	14700B	24202447
180A	Chain (4T65E) (Dual Chains)	1	97-Up	84700G	24206434
182A	Sprocket Set, w/ Shaft (35 Drive & 35 Driven) (Rocker Pin)	1	93-Up	84710FK	N.L.
182A	Sprocket Set, w/ Shaft (37 Drive & 33 Driven) (Rocker Pin)	1	93-Up	84710CAK	N.L.
182A	Sprocket Set, Gemini Design (33 Drive & 37 Driven) (4T65E)	1	97-Up	84710GAK	N.L.
182A	Sprocket Set, Gemini Design (35 Drive & 35 Driven) (4T65E)	1	97-Up	84710GK	N.L.
182A	Sprocket Set, Gemini Design (37 Drive & 33 Driven) (4T65E)	1	97-Up	84710GBK	N.L.
302C	Support, Driven Sprocket (4T60E) (92-99 Only)	1	92-99	84713C	8682611
302C	Support, Driven Sprocket (1st Design Sealing Ring) (4T65E)	1	97-E98	84713G	24206327
302C	Support, Driven Sprocket (2nd Design Sealing Ring) (4T65E)	1	L98-Up	84713H	24209098
DIFFERENTIALS					
522E	38T Sun Gear (2.84 Ratio) (2.945" Journal) (Reluctor Not Incl) (w/Speedo)	1	91-93	64715	N.L.
522E	38T Sun Gear (2.84 Ratio) (2.945" Journal) (Reluctor Not Incl) (Non Speedo)	1	91-95	84715A	N.L.
522E	42T Sun Gear (2.86 Ratio) (w/o Reluctor) (Bushing Type Ext Housing)	1	96-Up	84715D	8651920
522E	38T Sun Gear (3.05 Ratio) (w/o Reluctor) (Brg Type Ext Housing) (HD MN7)	1	96-Up	84715G	N.L.
522E	38T Sun Gear (3.05 Ratio) (w/o Reluctor) (Bushing Type Ext Housing)	1	96-Up	84715E	N.L.
522E	34T Sun Gear (3.06 Ratio) (2.945" Journal) (Reluctor Not Included)	1	91-95	84715B	N.L.
522E	34T Sun Gear (3.29 Ratio) (w/o Reluctor) (Brg Type Ext Housing) (HD MN7)	1	96-Up	84715H	N.L.
522E	34T Sun Gear (3.29 Ratio) (w/o Reluctor) (Bushing Type Ext Housing)	1	96-Up	84715	N.L.
522E	30T Sun Gear (3.33 Ratio) (2.945" Journal) (Reluctor Not Included)	1	91-95	84715C	N.L.
522E	Volvo XC90 Only	1	6-Feb	84715V	N.L.
RING GEARS AND SUN GEARS					
506E	Ring Gear (70 Right Standard Pitch Teeth)	1	91-95	84598A	8631571
506E	Ring Gear (70 Right Standard Pitch Teeth)	1	96-Up	84598C	8666642
506E	Ring Gear (70 Left Standard Pitch Teeth)	1	L93-95	84598B	8675330
506E	Ring Gear (78 Left Fine Pitch Teeth)	1	96-99	84598D	24200334
514E	Sun Gear (30T Right Angled Teeth)	1	91-95	84618B	8644237
514E	Sun Gear (34T Left Angled Teeth)	1	91-Up	84618AA	24201449
514E	Sun Gear (34T Right Angled Teeth)	1	91-95	84618A	24209184
514E	Sun Gear (34T Right Angled Teeth)	1	96-99	84618C	N.L.

ILL.		Qty.	Year	Part #	Ref. #
RING GEARS AND SUN GEARS (Cont.)					
514E	Sun Gear (38T Right Angled Teeth)	1	91-95	84618	8658040
514E	Sun Gear (38T Right Angled Teeth)	1	96-99	84618CA	N.L.
514E	Sun Gear (42 Fine Tooth Pitch) (4T60E)	1	91-95	84618E	24209238
514E	Sun Gear (42 Fine Tooth Pitch) (4T60E)	1	96-99	84618CB	N.L.
514E	Sun Gear (42 Fine Tooth Pitch) (4T65E)	1	97-Up	84618E	24209238
CASES/HOUSINGS & COMPONENTS					
530E	Case (4T60E)	1	91-99	84760C	N.L.
530E	Case (4T65E)	1	97-Up	84760D	24211898
564E	Extension Housing (4T60E)	1	91-99	84770	N.L.
564E	Extension Housing (4T65E) w/ Bearing to Final Drive	1	97-Up	84770D	N.L.
708G	Pan, Bottom (4T60E)	1	91-99	84765A	8651914
708G	Pan, Bottom (4T65E)	1	97-Up	84765B	N.L.
SNAP RINGS					
232B	Output Shaft to Differential	1	91-Up	84895	8631136
MISCELLANEOUS COMPONENTS					
442D	Oil Dam, Front Planet	1	91-Up	84698	8658368
520E	Pick-Up, Speed Sensor (29T)	1	97-Up	84683AC	8686077
520E	Pick-Up, Speed Sensor (30T)	1	91-Up	84683AA	8651521
520E	Pick-Up, Speed Sensor (31T)	1	91-Up	84683AB	N.L.
554E	Modulator, Black & Red Stripe (Single Stripe) Diesel	1	91-99	84160B	8649099
554E	Modulator, Red Stripe (Dual Stripe) (GM Universal)	1	91-99	84160R	8646956
N.I.	Cooler Line Fitting (4T60E)	1	91-95	84996A	8676164
N.I.	Cooler Line Fitting (Short Type) (4T65E)	1	04-Up	84996B	24236554
N.I.	Cooler Line Fitting (Long Type) (4T65E)	1	05-Up	84996C	24236555
N.I.	Cooler Line Fitting (w/ Check Ball) (Push In)	1	00-Up	74996A	24213958
N.I.	Clip, Cooler Line Fitting (Push-In Fittings)	1	91-Up	74496A	24205103
N.I.	O-Ring, Cooler Line Fitting (Push-In Fittings)	1	91-Up	74378	N.L.
N.I.	Cooler Line Fitting (Connector - Clip) (4T65E)	1	00-Up	74996B	24205102
N.I.	Retainer, Differential Lube Tube	1	91-Up	84999-5	84532-01K
SERVOS & ACCUMULATORS					
156A	Piston, 3-4 Accumulator Deep Design (w/o Spring Recess) (Aluminum)	1	91-99	84927	8651927
156A	Piston, 3-4 Accumulator Deep Design (w/ Spring Recess) (Aluminum w/ O-Ring)	1	97-99	84927C	8651933
156A	Piston, 3-4 Accumulator Deep Design (w/ Spring Recess) (Aluminum)	1	97-Up	84927D	24234486
156A	Piston, 3-4 Accumulator (Aluminum Replacement) (4T65E)	1	97-Up	84927D	24234486
160A	Spring, 3-4 Accumulator (Inner)	1	97-Up	84936BA	24205227
160A	Spring, 3-4 Accumulator (Center)	1	97-Up	84936CA	24204315
208A	Piston, Converter Clutch Accumulator	1	91-99	84942A	8646926
628F	Spring, 1-2 Accumulator (Orange/Green)	1	91-99	84926	8668487
628F	Spring, 1-2 Accumulator (Plain Colored)	1	91-99	84926B	8649091
630F	Pin, 1-2 & 2-3 Accumulator (4T65E)	1	97-Up	84928A	24203979
632F	Piston, 1-2 Accumulator Deep Design (w/o Spring Recess)	1	91-99	84927	8651927
632F	Piston, 1-2 Accumulator Deep Design (w/ Spring Recess)	1	97-99	84927C	8651933
632F	Piston, 1-2 & 2-3 Accumulator Deep Design (w/ Spring Recess)	1	97-Up	84927D	24234486
632F	Piston, 1-2 Accumulator Shallow Design (4T60E)	1	91-99	84927B	8651926
TECHNICAL MANUALS					
N.I.	4T60E	1	91-99	84400E	83-4T60ETM
N.I.	4T65E	1	97-Up	84400G	4T65E
N.I.	4T65E Update	1	97-Up	84400J	4T65E UPDATE
N.I.	Transmission Guide (GM) (4T60E)	1	91-99	84400EB	TMG-4T60E
N.I.	Transmission Guide (GM) (4T65E)	1	97-Up	84400GA	TMG-4T65E
N.I.	Technical Video, 4T60E (Includes Manual) (4T60E)	1	91-99	84407E	83-SGTV-21

Notes

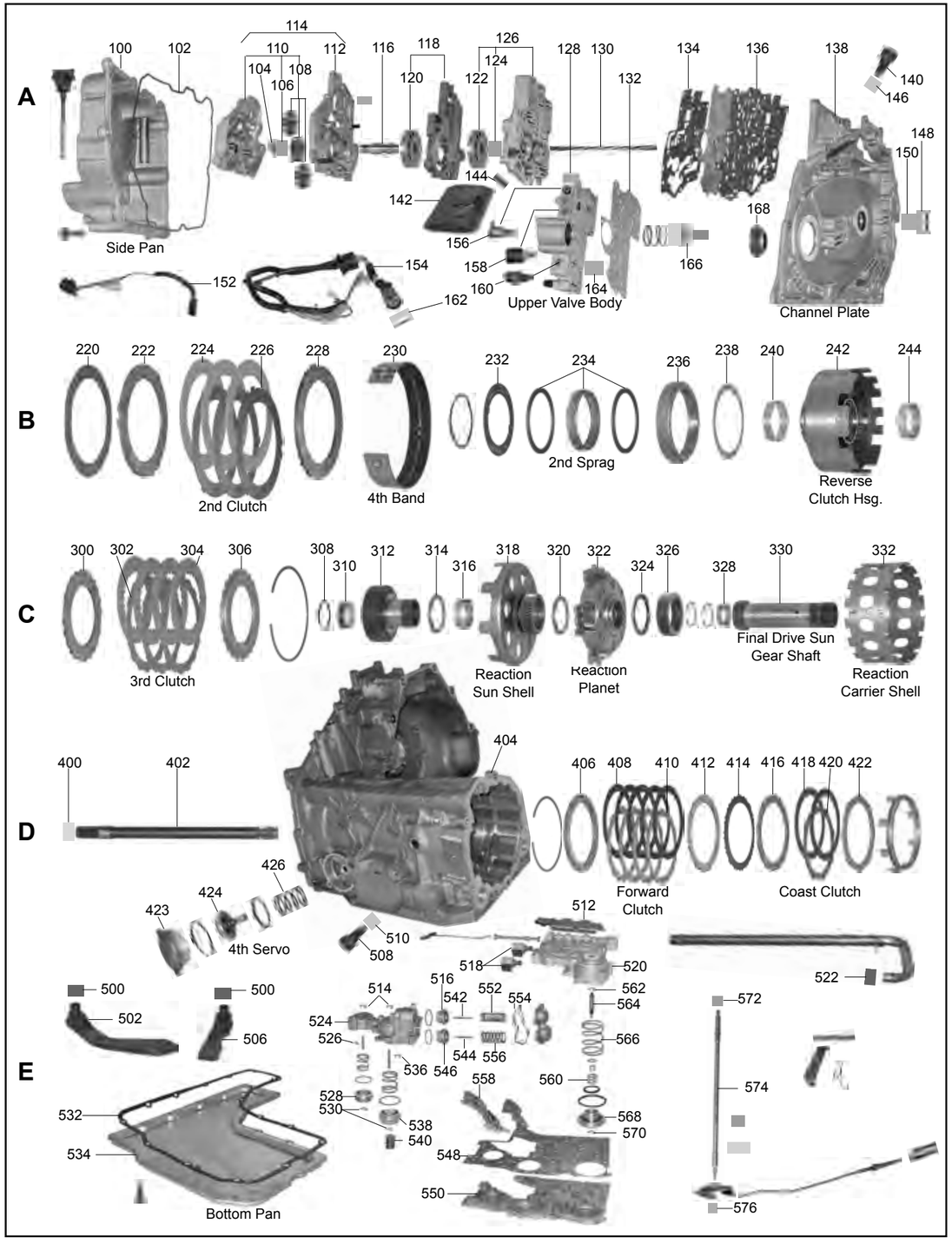
A
100 102 114 110 104 108 106 112 116 118 120 122 126 124 128 130 132 134 136 138 140 146 148 150 144 142 156 158 160 164 166 168 154 152 162
Side Pan
Upper Valve Body
Channel Plate
B
220 222 224 226 228 230 232 234 236 238 240 242 244
2nd Clutch
4th Band
2nd Sprag
Reverse Clutch Hsg.
C
300 302 304 306 308 310 312 314 316 318 320 322 324 326 328 330 332
3rd Clutch
Reaction Sun Shell
Reaction Planet
Final Drive Sun Gear Shaft
Reaction Carrier Shell
D
400 402 404 406 408 410 412 414 416 418 420 422 426 424 423 510 508 512 518 520 522
Forward Clutch
Coast Clutch
4th Servo
E
500 502 500 506 514 516 542 552 554 562 564 524 526 566 536 546 544 556 528 530 538 540 558 560 568 570 548 550 532 534 572 574 576
Bottom Pan

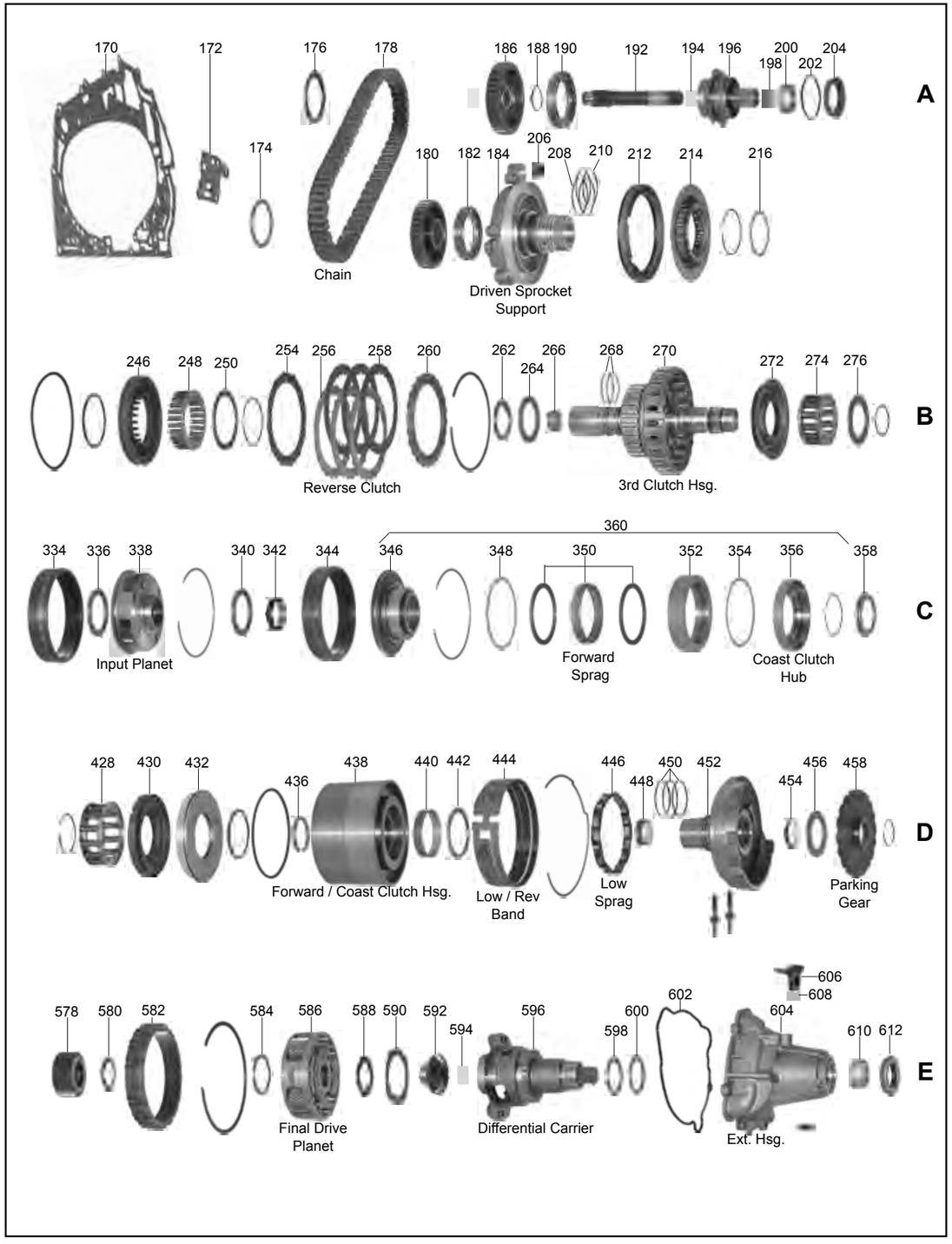
A
170 172 174 176 178 186 188 190 192 194 196 200 198 202 204 206 180 182 184 208 210 212 214 216
Chain
Driven Sprocket Support
B
246 248 250 254 256 258 260 262 264 266 268 270 272 274 276
Reverse Clutch
3rd Clutch Hsg.
C
360 334 336 338 340 342 344 346 348 350 352 354 356 358
Input Planet
Forward Sprag
Coast Clutch Hub
D
428 430 432 436 438 440 442 444 446 448 450 452 454 456 458
Forward / Coast Clutch Hsg.
Low / Rev Band
Low Sprag
Parking Gear
E
578 580 582 584 586 588 590 592 594 596 598 600 602 606 608 604 610 612
Final Drive Planet
Differential Carrier
Ext. Hsg.

ILL.		Qty.	Year	Part #	Ref. #
MASTER OVERHAUL KITS (WITH STEELS)					
N.I.	4T80E	1	93-94	94006AW	N.L.
N.I.	4T80E (03-Up, purchase VB Separator Plate 94322D)	1	95-Up	94006BW	N.L.
MASTER OVERHAUL KITS (LESS STEELS)					
N.I.	4T80E	1	93-94	94004AW	N.L.
N.I.	4T80E (03-Up, purchase VB Separator Plate 94322D)	1	95-Up	94004BW	N.L.
OVERHAUL KITS (WITH RINGS AND SEALS)					
N.I.	4T80E (03-Up, purchase VB Separator Plate 94322D)	1	93-Up	94002AW	N.L.
N.I.	4T80E (without Bonded VB Separator Plates)	1	93-Up	94002CW	N.L.
BONDED PISTONS					
N.I.	Piston Kit	1	93-Up	94960A	N.L.
212A	Piston, 2nd Clutch (Bonded)	1	93-94	94962	8681831
212A	Piston, 2nd Clutch (Bonded)	1	95-Up	94962A	24207753
272B	Piston, 3rd Clutch (Bonded)	1	93-Up	94965A	8677611
430D	Piston, Coast Clutch (Bonded)	1	93-Up	94969A	8682664
GASKETS & O-RINGS					
102A	Gasket, Side Cover	1	93-Up	94301W	8679392
144A	Seal, Oil Filter	1	93-Up	94379	8678599
170A	Gasket, Channel Plate (Outer)	1	93-Up	94324A	8683148
172A	Gasket, Channel Plate (Inner)	1	93-94	94325A	8682149
172A	Gasket, Channel Plate (Inner)	1	95-Up	94325B	24201535
500E	Seal, Scavenger Filters	2	93-Up	94379A	8680504
532E	Gasket, Bottom Pan	1	93-Up	94300AF	8681197
548E	Gasket/Bonded Plate, Lower VB (No ID Stamp, Replaces 0435 ID Stamp)	1	1993	94322A	8683184
548E	Gasket/Bonded Plate, Lower VB (1193 ID Stamp)	1	1994	94322B	24201193
548E	Gasket/Bonded Plate, Lower VB (3957 ID Stamp, Replaces 5347 ID Stamp)	1	94-02	94322C	24213957
548E	Gasket/Bonded Plate, Lower VB (5286 ID Stamp)	1	03-Up	94322D	24225286
N.I.	Gasket Kit, Cover, Valve Body & Spacer	1	93-Up	94320CK	8684966
N.I.	O-Ring, TCC Turbine	1	93-Up	74380	24212987
METAL CLAD SEALS					
168A	Right Axle	1	93-Up	94076A	8677554
204A	Front Converter Housing	1	93-Up	94070A	8677749
572E	Manual Shaft	1	93-Up	84072A	8644709
612E	Left Axle	1	93-Up	94077A	8679679
SEALING RINGS & KITS					
N.I.	Ring Kit	1	93-Up	94175A	N.L.
FRICTION PLATES					
224B	2nd Clutch (.081")	3	93-94	94104A	8681371
224B	2nd Clutch (.071")	4	95-Up	94104B	24201546
258B	Reverse	3	93-Up	94110A	24206838
304C	3rd Clutch	4	93-Up	94106A	8684832
408D	Forward	5	93-Up	94108A	24206898
418D	Coast (51T)	2	93-94	94112A	8677829
418D	Coast (53T)	2	95-Up	94112B	24200459
STEEL PLATES					
226B	2nd Clutch (.091")	2	93-94	94124A	8681834
226B	2nd Clutch (.081")	3	95-Up	94124B	8684721
254B	Reverse (Cushion - Waved)	1	98-Up	94131	24212652
256B	Reverse	3	93-Up	94130A	8677615
302C	3rd Clutch	3	93-Up	94126A	8677612
410D	Forward	4	93-Up	94128A	8679584
414D	Forward (Cushion)	1	94-Up	94129A	8684654
420D	Coast	1	93-Up	94132A	8677808
PRESSURE PLATES					
222B	2nd Clutch (Apply) Flat (.175")	1	1994	94144C	24201543
222B	2nd Clutch (Apply) Flat (.205")	1	1994	94144B	8684719
228B	2nd Clutch (Backing) Flat (.175")	1	95-Up	94145A	24201543
228B	2nd Clutch (Backing) Flat (.235")	1	1994	94145AA	8684720

ILL.		Qty.	Year	Part #	Ref. #
PRESSURE PLATES (Cont.)					
228B	2nd Clutch (Backing) Stepped (.270")	1	95-Up	94145B	24201544
260B	Reverse (Backing) (5.7mm)	1	98-Up	94150A	24200288
260B	Reverse (Backing) (5.2mm)	1	98-Up	94150D	24212649
260B	Reverse (Backing) (6.0mm)	1	98-Up	94150E	24212651
300C	3rd Clutch (Apply) Flat	1	93-Up	94146A	8677613
306C	3rd Clutch (Backing) Stepped	1	93-Up	94147A	8678722
412D	Forward Clutch (Apply)	1	93-Up	94148A	8680622
406D	Forward (Backing) (8.0mm)	1	93-Up	94149D	24202650
406D	Forward (Backing) (8.5mm)	1	93-Up	94149EA	8684660
416D	Coast Clutch (Backing) (Forward Apply)	1	94-Up	94149A	8684653
422D	Coast Clutch (Apply) (.210")	1	93-Up	94153	8679837
FILTERS					
142A	Under Side Cover	1	93-Up	94010A	8681416
506E	Left Scavenger	1	93-Up	94013A	8680700
502E	Right Scavenger	1	93-Up	94013B	8679416
N.I.	Pump Pressure Screen (in Valve Body)	1	93-Up	74014A	12338044
N.I.	EPC Solenoid (in Valve Body)	1	93-Up	34018	8661715
N.I.	Shift Solenoid (in Valve Body between 2 Shift Solenoids)	1	93-Up	94018A	8680389
FILTER KITS					
N.I.	Filter Kit - Includes L & R Scavenger Filters & Pan Gasket	1	93-Up	94011	N.L.
BANDS					
230B	Overdrive (Front, Flex)	1	93-Up	94020A	8684246
444D	Low/ Reverse (Double Wrap)	1	93-Up	94024A	8683705
BUSHINGS					
N.I.	Bushing Kit	1	93-Up	94030A	N.L.
106A	Converter	1	93-Up	94034	N.L.
THRUST WASHERS/BEARINGS					
WASHERS					
N.I.	Washer Kit	1	93-Up	94200	N.L.
216A	2nd Clutch	1	93-Up	94220	8679618
238B	Reverse Drum to Sprag Race	1	93-Up	94227	8678725
264B	Driven Sprocket Support to 3rd Drum (3.01mm)	1	93-Up	94228C	8680352
264B	Driven Sprocket Support to 3rd Drum (3.82mm)	1	93-Up	94228	8680355
264B	Driven Sprocket Support to 3rd Drum (4.75mm)	1	93-Up	94228K	8680358
308C	3rd Clutch Hub	1	93-Up	94226	8678721
BEARINGS					
340C	Front Planet & Front Planet to Hub	2	93-Up	44211C	9436851
340C	Drive Sprocket	1	93-Up	44211C	9436851
340C	Differential Case	1	93-Up	44211C	9436851
456D	Fwd Drum Support to Park Gear	1	93-Up	84238	8646504
ELECTRICAL COMPONENTS					
N.I.	Switch, Internal Mode (Manual Valve)	1	00-Up	94410	24205999
152A	Sensor, Input Speed (TSS) (1st Design Flat Bracket)	1	93-E96	94438A	24209654
152A	Sensor, Input Speed (TSS) (2nd Design Bracket w/ Dimple)	1	L96-Up	94438AA	24207491
154A	Wire Harness, Single Plug (14 Pin Connector) (1.550" OD)	1	94-E96	94446B	12143281
154A	Wire Harness, Single Plug (14 Pin Connector) (1.425" OD)	1	L96-01	94446C	15303097
154A	Wire Harness, Internal Mode Switch Design (10 Pin Plug)	1	00-03	94446D	24219013
154A	Wire Harness Extension, Internal Mode Switch Design (10 Pin Plug)	1	00-03	94446E	15320478
154A	Wire Harness, Internal Mode Switch Design (8 Pin Plug)	1	04-05	94446	24229667
154A	Wire Harness Extension, Internal Mode Switch Design (8 Pin Plug)	1	04-05	94446G	24224542
154A	Wire Harness, Internal Mode Switch Design (9 Pin Plug)	1	06-Up	94446H	24226756
154A	Wire Harness Extension, Internal Mode Switch Design (9 Pin Plug)	1	06-Up	94446J	24236023
156A	Solenoid, Lock-Up (TCC) PWM	1	93-Up	74418E	24227747
158A	Solenoid, EPC (2 Prong Connector at the Bottom) (Spade Terminal)	1	93-03	34435A	24209276
158A	Solenoid, EPC (2 Prong Connector at the Side) (Molded Connector)	1	04-Up	34435C	24225320
512E	Manifold Pressure Switch & Range Sensor (PRNDL Switch)	1	93-99	94411A	24200770
512E	Manifold Pressure Switch (Internal Mode Design)	1	00-05	94411B	24209545
518E	Solenoid Kit, Shift (1-2, 2-3) (w/ Both Solenoids & Bracket) (Will Retro) (2-3 to 99)	1	93-99	94421AK	24211355

ILL.		Qty.	Year	Part #	Ref. #
ELECTRICAL COMPONENTS (Cont.)					
518E	Solenoid, 1-2 Shift	1	93-Up	94421A	24207662
518E	Solenoid, 2-3 Shift	1	93-99	94421A	24207662
518E	Solenoid, 2-3 Shift (Internal Mode Design)	1	00-Up	94421B	24207384
606E	Sensor, Vehicle Output Speed Sensor (VSS)	1	93-Up	94436A	24204319
N.I.	Sensor, Temperature	1	93-Up	94437A	8678854
N.I.	Wiring Harness (External Repair) (Universal 20 Pin) (GM)	1	94-Up	74445U	N.L.
PUMPS					
114A	Pump	1	93-Up	94500A	N.L.
196A	Stator Support	1	93-Up	94529A	N.L.
DRUMS & COMPONENTS					
212A	Piston, 2nd Clutch (Bonded)	1	93-94	94962	8681831
212A	Piston, 2nd Clutch (Bonded)	1	95-Up	94962A	24207753
242B	Drum, Reverse without Sprag	1	93-Up	94556A	N.L.
270B	Drum, 3rd Clutch	1	93-Up	94555	N.L.
272B	Piston, 3rd Clutch (Bonded)	1	93-Up	94965A	8677611
312C	Hub, 3rd Clutch	1	93-Up	94575	N.L.
356C	Hub, Coast	1	93-Up	94579	N.L.
430D	Piston, Coast Clutch (Bonded)	1	93-Up	94969A	8682664
438D	Drum, Forward / Coast	1	93-Up	94554	N.L.
PLANETS & COMPONENTS					
322C	Reaction	1	93-Up	94584	N.L.
334C	Ring Gear, Reaction	1	93-Up	94592	N.L.
338C	Input	1	93-Up	94582	N.L.
344C	Ring Gear, Input	1	93-Up	94592	N.L.
346C	Hub, Input w/ Inner Race	1	93-Up	94602	N.L.
582E	Ring Gear, Final Drive	1	93-Up	94598	N.L.
SUN GEARS					
326C	Sun Gear, Input	1	93-Up	94612	N.L.
ONE WAY CLUTCHES					
234B	Sprag, Intermediate	1	93-Up	94652A	8686053
350C	Sprag, Forward	1	93-Up	94658A	8686054
352C	Outer Race, Forward	1	93-Up	94669	N.L.
446D	Sprag, Low Clutch Roller	1	93-Up	94654A	7471004
SHELLS & SUPPORTS					
318C	Shell, Sun Gear	1	93-Up	94624	N.L.
332C	Shell, Reaction	1	93-Up	94622	N.L.
452D	Support, Forward / Coast Drum	1	93-Up	94634	N.L.
SHAFTS					
130A	Shaft, Pump	1	93-Up	94671A	8679883
192A	Shaft, Turbine	1	93-Up	94673A	N.L.
402D	Shaft, Output	1	93-Up	94678	N.L.
VALVE BODIES & GOVERNORS					
520E	Valve Body, Lower (Exc 1193 Stamp)	1	93-99	94740-3L	N.L.
520E	Valve Body, Lower (1193 Stamp)	1	1994	94740-4L	N.L.
520E	Valve Body, Lower (5347 Stamp)	1	00-03	94740-5L	N.L.
520E	Valve Body, Lower (5286 Stamp)	1	03-Up	94740-6L	N.L.
520E	Valve Body, Upper	1	93-03	94740-1U	N.L.
520E	Valve Body, Upper	1	04-Up	94740-2U	N.L.
DIFFERENTIALS					
586E	Differential Assembly (42T Sun Gear, 36T Pinion)	1	93-Up	94715K	N.L.
586E	Differential Assembly (54T Sun Gear, 30T Pinion)	1	93-Up	94715AK	N.L.
CHAINS AND SPROCKETS					
178A	Chain, 1.000"	1	93-Up	94700B	24206043
180A	Sprocket, Driven (.900", 39T)	1	93-Up	94706	N.L.
184A	Driven Sprocket Support (Cast # 8683160)	1	93-94	94713	N.L.
184A	Driven Sprocket Support (Cast # 24206735)	1	95-Up	94713A	N.L.

ILL.		Qty.	Year	Part #	Ref. #
MISCELLANEOUS COMPONENTS					
N.I.	Clip, Variable Force Motor Solenoid	1	93-Up	34843E	8684217
534E	Pan, Bottom	1	93-Up	94765	N.L.
SERVOS & ACCUMULATORS					
N.I.	Servo Assembly, 4th	1	93-Up	94900	N.L.
166A	Piston, 2-3 Accumulator	1	93-Up	94932	72871-01
516E	Piston, Reverse Accumulator	1	93-Up	94947	8682754
528E	Piston, 3-4 Accumulator	1	93-Up	94937	72872-01
538E	Piston, Forward Accumulator	1	93-Up	94927	8681628
538E	Piston, 1-2 Accumulator	1	93-Up	94927B	8684724
N.I.	Spring, 2-3 Accumulator (White)	1	93-Up	94931	8683288
N.I.	Spring, 2-3 Accumulator (Light Blue)	1	93-Up	94931A	8684827
TECHNICAL MANUALS					
N.I.	Technical Manual	1	93-Up	94400	TM-4T80E
N.I.	Transmission Guide (GM)	1	93-Up	94400A	PDF-41TE

Notes

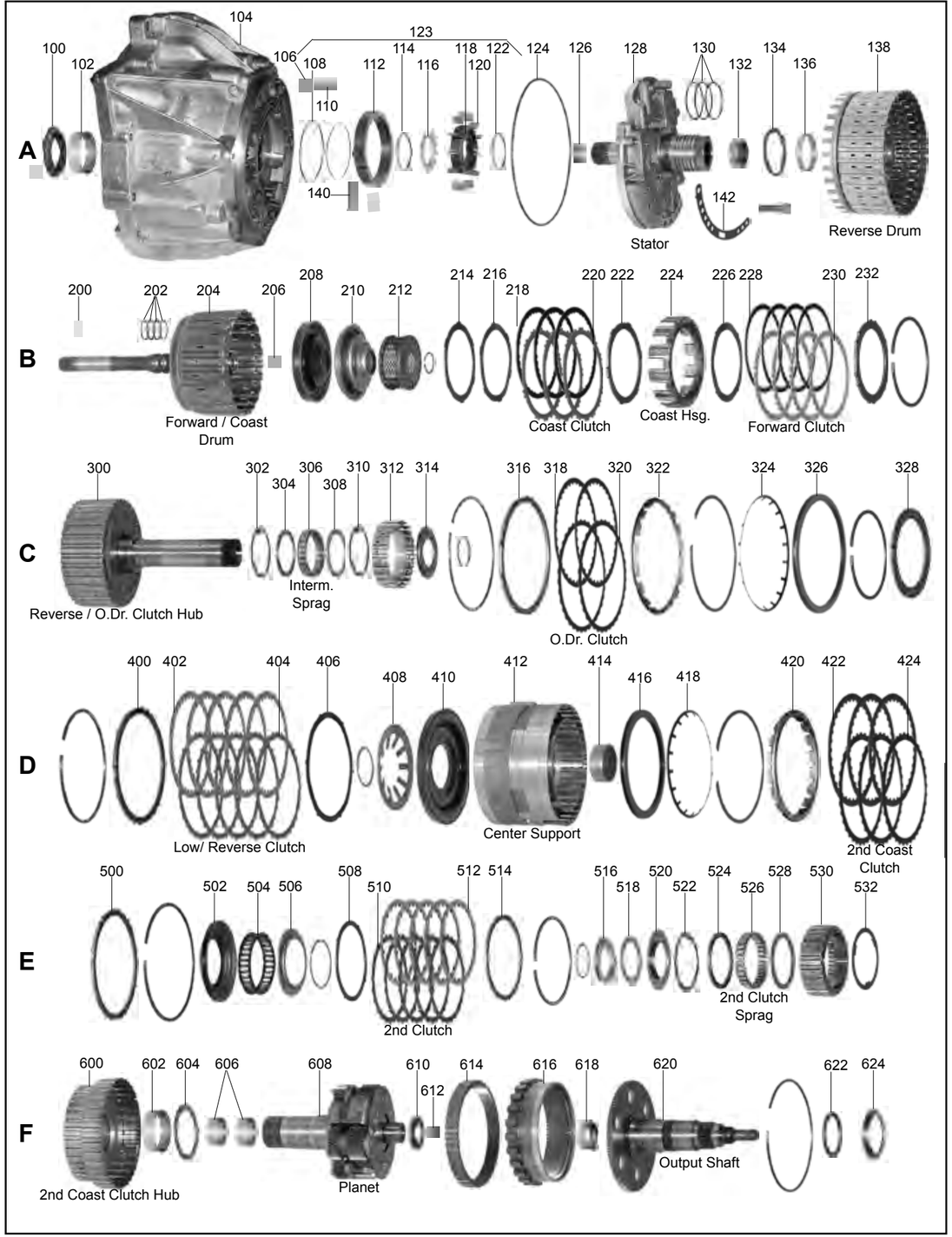
A
B
C
D
E
F
Reverse Drum
Stator
Forward / Coast Drum
Coast Clutch
Coast Hsg.
Forward Clutch
Reverse / O.Dr. Clutch Hub
Interm. Sprag
O.Dr. Clutch
Low/ Reverse Clutch
Center Support
2nd Coast Clutch
2nd Clutch
2nd Clutch Sprag
2nd Coast Clutch Hub
Planet
Output Shaft

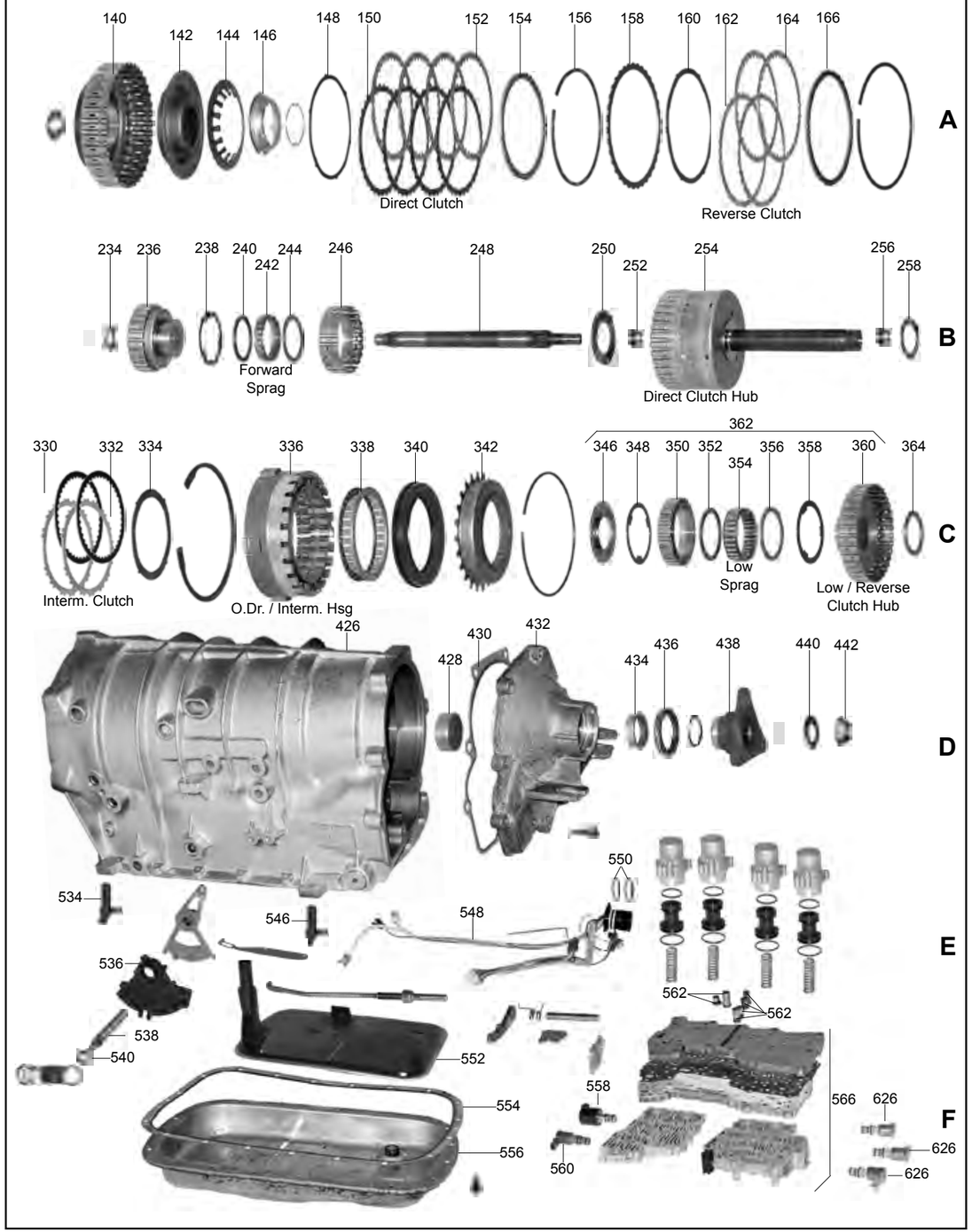
A
B
C
D
E
F
Direct Clutch
Reverse Clutch
Forward Sprag
Direct Clutch Hub
Interm. Clutch
O.Dr. / Interm. Hsg
Low Sprag
Low / Reverse Clutch Hub

ILL.		Qty.	Year	Part #	Ref. #
MASTER OVERHAUL KITS (WITH STEELS)					
N.I.	4L40E (w/ Pistons)	1	99-Up	144006B	N.L.
N.I.	5L40E, 5L50E (A5S, 360R) (w/ Pistons)	1	00-01	144006C	N.L.
N.I.	5L40E, 5L50E (A5S, 360R) (w/ Pistons)	1	02-Up	144006D	N.L.
OVERHAUL KITS (WITH RINGS AND SEALS)					
N.I.	4L40E, 5L40E, 5L50E (w/o Pistons)	1	99-Up	144002	N.L.
BONDED PISTONS					
N.I.	Piston Kit (Bonded)	1	99-01	144960K	N.L.
N.I.	Piston Kit (Bonded)	1	02-Up	144960AK	N.L.
GASKETS & O-RINGS					
124A	O-Ring, Pump	1	99-Up	144311	N.L.
142A	Gasket, Pump	1	99-Up	144310	N.L.
554F	Gasket, Pan (Bonded)	1	99-Up	144300	96041861
N.I.	Gasket, Valve Body (Upper)	1	99-Up	144320	N.L.
N.I.	Gasket, Valve Body (Lower)	1	99-Up	144321	N.L.
N.I.	Gasket, Valve Body Channel Plate	1	99-Up	144322	N.L.
METAL CLAD SEALS					
100A	Converter	1	99-Up	144070	96020366
436D	Rear	1	99-Up	144074	96020744
436D	Adapter Seal, 4wd BMW	1	99-Up	69074	0750-111-204
540E	Manual Lever	1	99-Up	84072A	8644709
SEALING RINGS & KITS					
N.I.	Sealing Ring Kit	1	99-Up	144175	N.L.
FRICTION PLATES					
ONE SIDED, INTERNAL TEETH					
152A	Direct	4-5	99-Up	144106	96020156
164A	Reverse	2	99-Up	144100	96020209
218B	Coast	3	99-Up	144102	96020322
228B	Forward	4	99-Up	144108	96020326
318C	Overdrive	2-3	99-Up	144100	96020209
332C	Intermediate	3-4	99-Up	144103	96020684
402D	Low/ Reverse	5	99-Up	144106	96020156
422D	2nd Coast (173mm OD)	3	99-01	144106	96020156
422D	2nd Coast (176mm OD)	3	02-Up	144116	96024087
512E	2nd Clutch (130mm OD) (5L40E)	5	99-01	144104	96022840
512E	2nd Clutch (138mm OD) (5L40E)	5	02-Up	144104A	96023158
ONE SIDED, EXTERNAL TEETH					
150A	Direct	4	99-Up	144126	96020157
162A	Reverse	2	99-Up	144120	96020210
220B	Coast	3	99-Up	144122	96020323
230B	Forward	4	99-Up	144128	96020327
320C	Overdrive	2-3	99-Up	144120	96020210
330C	Intermediate	3-4	99-Up	144123	96020685
404D	Low/ Reverse	4	99-Up	144134	96020780
424D	2nd Coast (173mm OD)	4	99-01	144126	96020157
424D	2nd Coast (176mm OD)	3	02-Up	144136	96024089
510E	2nd Clutch (130mm OD) (5L40E)	5	99-01	144124	96022841
510E	2nd Clutch (138mm OD) (5L40E)	5	02-Up	144124A	96023159
PRESSURE PLATES					
154A	Direct	1	99-Up	144146	N.L.
158A	Reverse Clutch Apply (36T)	1	99-Up	144151	N.L.
166A	Reverse Clutch Backing (18T)	1	99-Up	144150	N.L.
214B	Coast Clutch Apply	1	99-Up	144153	N.L.
222B	Coast Clutch Backing	1	99-Up	144152	N.L.
232B	Forward (Top)	1	99-Up	144148	N.L.
316C	Overdrive	1	99-Up	144150	N.L.
328C	Intermediate	1	99-Up	144144	N.L.
400D	Low/ Reverse Clutch	1	99-Up	144154	N.L.

ILL.		Qty.	Year	Part #	Ref. #
PRESSURE PLATES (Cont.)					
500E	2nd Coast (6T) (5L40E)	1	99-Up	144156	N.L.
500E	2nd Coast (18T) (5L50E)	1	02-Up	144156A	N.L.
514E	2nd Clutch (5.460" OD) (5L40E)	1	99-Up	144142	N.L.
514E	2nd Clutch (5.150" OD) (5L50E)	1	02-Up	144142A	N.L.
FILTERS					
552E	BMW Cars w/ Neck Spacer, Flat Inlet	1	99-Up	144010	24117-533-699
552E	BMW Awd w/ Neck Spacer, .500" Tall Plastic Inlet	1	01-Up	144010A	24117-533-700
552E	Cadillac w/ Neck Spacer, Flat Inlet	1	04-Up	144010	24117-533-699
552E	Cadillac, No Neck Spacer, Flat Inlet	1	03-04	144010B	96041844
FILTER KITS					
N.I.	BMW Cars w/ Neck Spacer, Flat Inlet	1	99-Up	144011	N.L.
N.I.	BMW Awd w/ Neck Spacer, .500" Tall Plastic Inlet	1	01-Up	144011A	N.L.
N.I.	Cadillac w/ Neck Spacer, Flat Inlet	1	04-Up	144011	N.L.
N.I.	Cadillac, No Neck Spacer, Flat Inlet	1	03-04	144011B	N.L.
BUSHINGS					
N.I.	Bushing Kit	1	99-Up	144030	N.L.
102A	Pump	1	99-Up	74034B	24206030
THRUST WASHERS/BEARINGS					
WASHERS					
250B	Direct Clutch Hub to Forward Sprag	1	99-Up	144236	N.L.
258B	Overdrive to Reverse Hub	1	99-Up	144230	N.L.
ELECTRICAL COMPONENTS					
534E	Sensor, OSS (BMW)	1	99-Up	144436	96022527
534E	Sensor, OSS (Cadillac)	1	03-Up	144436A	96041860
546E	Sensor, ISS (BMW)	1	99-Up	144436	96022527
546E	Sensor, ISS (Cadillac)	1	99-Up	144436A	96041860
548E	Wire Harness, Internal (BMW)	1	99-Up	144446	N.L.
548E	Wire Harness, Internal (Cadillac)	1	03-Up	144446A	96042847
558F	Solenoid, EPC (Holley)	1	99-03	84431G	31752-KA001
558F	Solenoid, EPC (Bosch)	1	04-Up	84431H	24225825
560E	Solenoid, TCC	1	99-Up	74418E	24227747
626F	Solenoid, Shift (1-2, 2-3, 4-5)	3	99-Up	144421	96041866
N.I.	Sensor, TOT (Cadillac)	1	03-Up	144437	N.L.
PUMPS					
128A	Pump Stator (11 Bolt, Cast 095304)	1	99-Up	144520	N.L.
128A	Pump Stator (Code 1268-190100)	1	02-Up	144520A	N.L.
PUMP COMPONENTS					
106A	Spring, Pump Slide Pivot Pin	1	99-Up	54540B	8634098
110A	Pump Slide Pivot Pin	1	99-Up	54535B	8634097
112A	Pump Slide	1	99-Up	144534	N.L.
114A	Pump Vane Ring, Hardened Steel	2	99-Up	54538BS	24201144
116A	Pump Rotor Guide (13 Vane Type)	1	99-Up	74539C	24205410
118A	Pump Rotor (13 Vane, .707" Thick)	1	99-Up	74532C	24205400
120A	Pump Vane Kit (Qty 13)	1	99-Up	74533K-1B	8631280
123A	Pump Rotor Kit	1	99-Up	144531K	N.L.
140A	Pump Spring, Outer Slide (.645" OD)	1	99-Up	144536	N.L.
DRUMS & COMPONENTS					
138A	Direct / Reverse Clutch Drum, Stamped Steel (31T Reluctor) (5L40E)	1	99-Up	144556	N.L.
140A	Piston, Reverse Clutch (Bonded)	1	99-Up	144966	N.L.
142A	Piston, Direct Clutch (Bonded)	1	99-Up	144965	N.L.
204B	Forward / Coast Clutch Drum w/ Shaft (9.125" Long Shaft) (5L40E)	1	99-Up	144554	N.L.
204B	Forward / Coast Clutch Drum w/ Shaft (8 15/16" Long Shaft) (5L50E)	1	02-Up	144554A	N.L.
208B	Piston, Forward Clutch (Bonded)	1	99-Up	144964	N.L.
210B	Piston, Coast Clutch (Bonded)	1	99-Up	144969	N.L.
224B	Coast Clutch Housing (1.380" Thick) (5L40E)	1	99-Up	144559	N.L.
224B	Coast Clutch Housing (1.265" Thick) (5L50E)	1	02-Up	144559A	N.L.
246B	Forward Clutch Hub and Sprag Assembly	1	99-Up	144575K	N.L.

ILL.		Qty.	Year	Part #	Ref. #
DRUMS & COMPONENTS (Cont.)					
254B	Direct Clutch Hub w/ Shaft (5L40E)	1	99-Up	144575	N.L.
254B	Direct Clutch Hub w/ Shaft (5L50E)	1	02-Up	144575A	N.L.
300C	Overdrive / Reverse Clutch Hub (36T)	1	99-Up	144570	N.L.
326C	Piston, Overdrive Brake (Bonded)	1	99-Up	144960	N.L.
336C	Intermediate / Overdrive Clutch Housing (3 Clutch) (5L40E)	1	99-Up	144550	N.L.
336C	Intermediate / Overdrive Clutch Housing (2 Clutch) (5L50E)	1	02-Up	144550A	N.L.
340C	Piston, Intermediate Brake (Bonded)	1	99-Up	144962	N.L.
360C	Low / Reverse Clutch Hub w/ Low Sprag Inner Race	1	99-Up	144577	N.L.
410D	Piston, Low and Reverse Brake (Bonded)	1	99-01	144967	N.L.
410D	Piston, Low and Reverse Brake (Bonded)	1	02-Up	144967A	N.L.
416D	Piston, 2nd Coast (Bonded)	1	99-01	144963	N.L.
416D	Piston, 2nd Coast (Bonded)	1	02-Up	144963A	N.L.
502E	Piston, 2nd Brake (Bonded)	1	L99-01	144968	N.L.
502E	Piston, 2nd Brake (Bonded)	1	02-Up	144968A	N.L.
600F	2nd Coast Clutch Hub (5L40E)	1	99-Up	144579	N.L.
600F	2nd Coast Clutch Hub (5L50E)	1	02-Up	144579A	N.L.
PLANETS & COMPONENTS					
N.I.	Planetary Package Including Ring Gear (5L40E) (1 Groove)	1	99-Up	144583	N.L.
608F	Planetary (1 Groove) (5L40E)	1	99-Up	144584	N.L.
608F	Planetary (No Groove) (5L50E)	1	02-Up	144584A	N.L.
614F	Ring Gear (107T Right Angle) (No OD Groove) (5L40E)	1	99-Up	144594A	N.L.
614F	Ring Gear (110T Right Angle) (1 OD Groove) (5L50E)	1	02-Up	144594B	N.L.
616F	Ring Gear (106T Left Angle) (1 OD Groove on Park Gear) (5L40E)	1	99-Up	144594	N.L.
616F	Ring Gear (114T Left Angle) (No OD Groove on Park Gear) (5L50E)	1	02-Up	144594C	N.L.
N.I.	Planetary Package Including Ring Gear (5L50E) (No Groove)	1	02-Up	144583A	N.L.
ONE WAY CLUTCHES					
242B	Sprag, Forward Clutch	1	99-Up	144658	741369
306C	Sprag, Intermediate Clutch	1	99-Up	144658	741369
354C	Sprag, Low Roller Clutch	1	99-Up	144654	908095
526E	Sprag, 2nd Clutch	1	99-Up	144652	908094
SHELLS & SUPPORTS					
412D	Center Support (6T 2nd Coast Steels) (5L40E)	1	99-Up	144632	N.L.
412D	Center Support (36T 2nd Coast Steels) (5L50E)	1	02-Up	144632A	N.L.
SHAFTS					
248B	Input Sun Gear Shaft (11.500" Long) (5L40E)	1	99-Up	144674	N.L.
248B	Input Sun Gear Shaft (11 11/16" Long) (5L50E)	1	02-Up	144674A	N.L.
620F	Output Shaft (106T Ring Gear Type) (5L40E)	1	99-Up	144678	N.L.
620F	Output Shaft (114T Ring Gear Type) (5L50E)	1	02-Up	144678A	N.L.
VALVE BODIES & GOVERNORS					
566E	Valve Body 789 Code	1	99-01	144740-1	N.L.
566E	Valve Body 378 Code	1	02-Up	144740-2	N.L.
566E	Valve Body 374 Code	1	04-Up	144740-3	N.L.
N.I.	Kit, AFL Valve & Sleeve (requires T-F-55211-TL & T-VB-Fix)	1	99-Up	144741LK	55211-01K
N.I.	Kit, TCC Reg. Valve & Sleeve (requires T-F-55211-TL4)	1	99-Up	144741QK	55211-04K
N.I.	Kit, Reverse Lockout Valve & Sleeve (requires T-F-55211-TL & T-VB-FIX)	1	99-Up	144741H-1	55211-11K
MISCELLANEOUS COMPONENTS					
326C	Piston Kit (Bonded)	1	99-01	144960K	N.L.
326C	Piston Kit (Bonded)	1	02-Up	14460AK	N.L.
TECHNICAL MANUALS					
N.I.	Tech Manual	1	99-Up	144400	83-4L50E
N.I.	Transmission Guide (GM)	1	99-Up	144400A	TMG-4/5L40E
TOOLS					
N.I.	Snap Ring Pliers, Center Support	1	02-Up	T-6800	N.L.

TK TOLEDO TRANS-KIT

SEAL AFTERMARKET PRODUCTS
your source for engineered solutions

BRYCO

ProSELECT

RoadMaster

PRODUCT ANNOUNCEMENT

Piston Kit 5L40E 2000-2001 (3 Pistons)

Seal Aftermarket Products now has the complete Piston Kit for the 5L40E covering 2000-01.
Please call your Sales Representative for pricing and availability



44960K
Piston Kit 5L40E 2000-01 [3 Pistons]



14475572
Piston 5L40E Clutch [BMW]
1999-Up



14475571
Piston 5L40E 2nd Coast Clutch
(AWD) 1999-Up



14475573
Piston 5L40E Clutch [Cadillac]
1999-2001

Also available is the 5L40E Piston Kit 2002-Up [9 Pistons] SAP # 44960AK

Release Date 9/27/2013

Sales Policy: All shipments are FCA Pembroke Park. Price and Availability subject to change
© 2013 Seal Aftermarket Products LLC. ALL RIGHTS RESERVED. Possession of price list does not constitute offer to sell
Disclaimer - All information has been checked for accuracy, however no liability can be assumed for errors and omissions

Seal Aftermarket Products LLC · 2315 SW 32nd Avenue · Pembroke Park FL 33023 · [P] (800) 582-2760 · [F] 954-364-2401 · www.sealaftermarketproducts.com

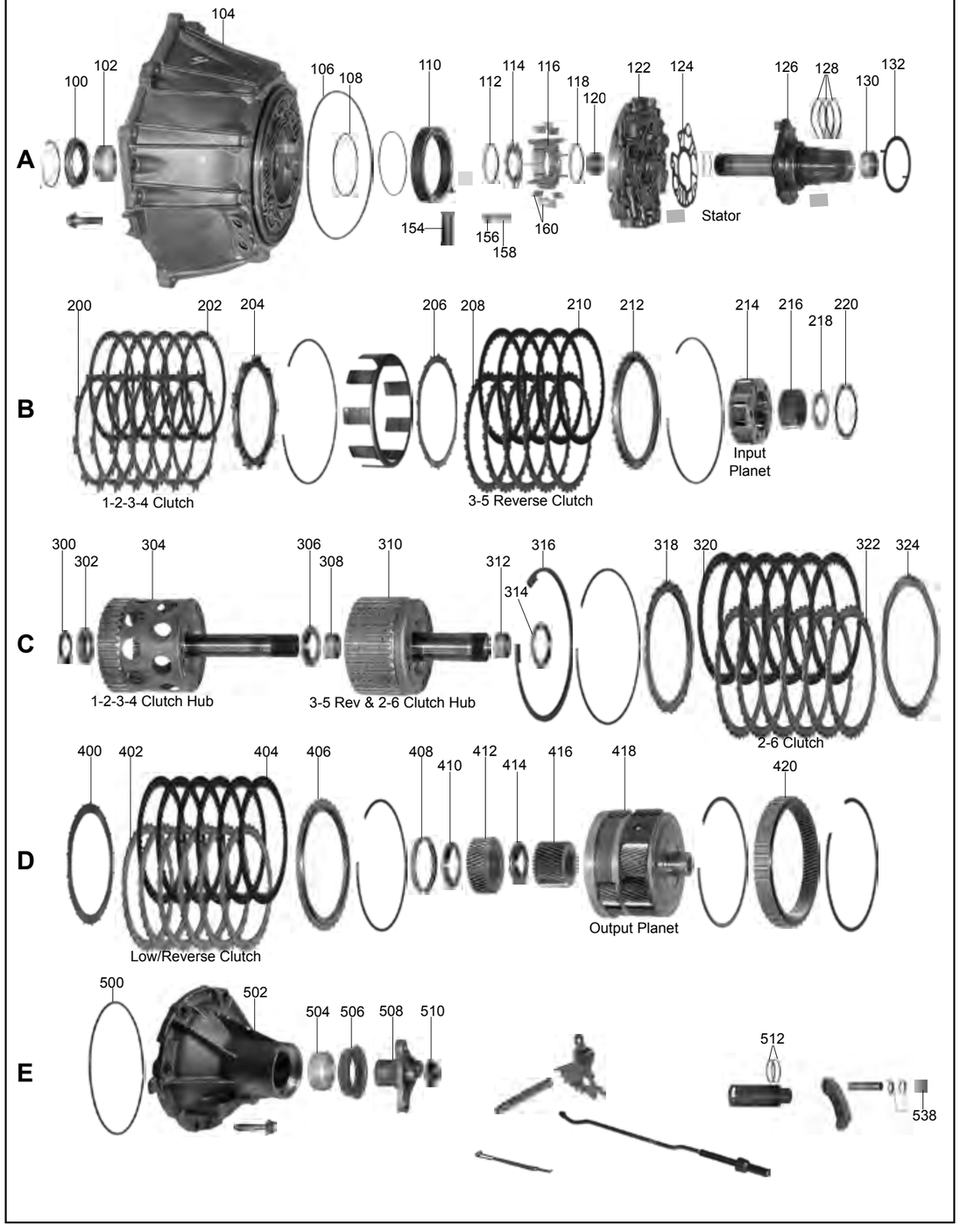
A
B
C
D
E
100
102
104
106
108
110
112
114
116
118
120
122
124
126
128
130
132
154
156
158
160
Stator
200
202
204
206
208
210
212
214
216
218
220
1-2-3-4 Clutch
3-5 Reverse Clutch
Input Planet
300
302
304
306
308
310
312
314
316
318
320
322
324
1-2-3-4 Clutch Hub
3-5 Rev & 2-6 Clutch Hub
2-6 Clutch
400
402
404
406
408
410
412
414
416
418
420
Low/Reverse Clutch
Output Planet
500
502
504
506
508
510
512
538

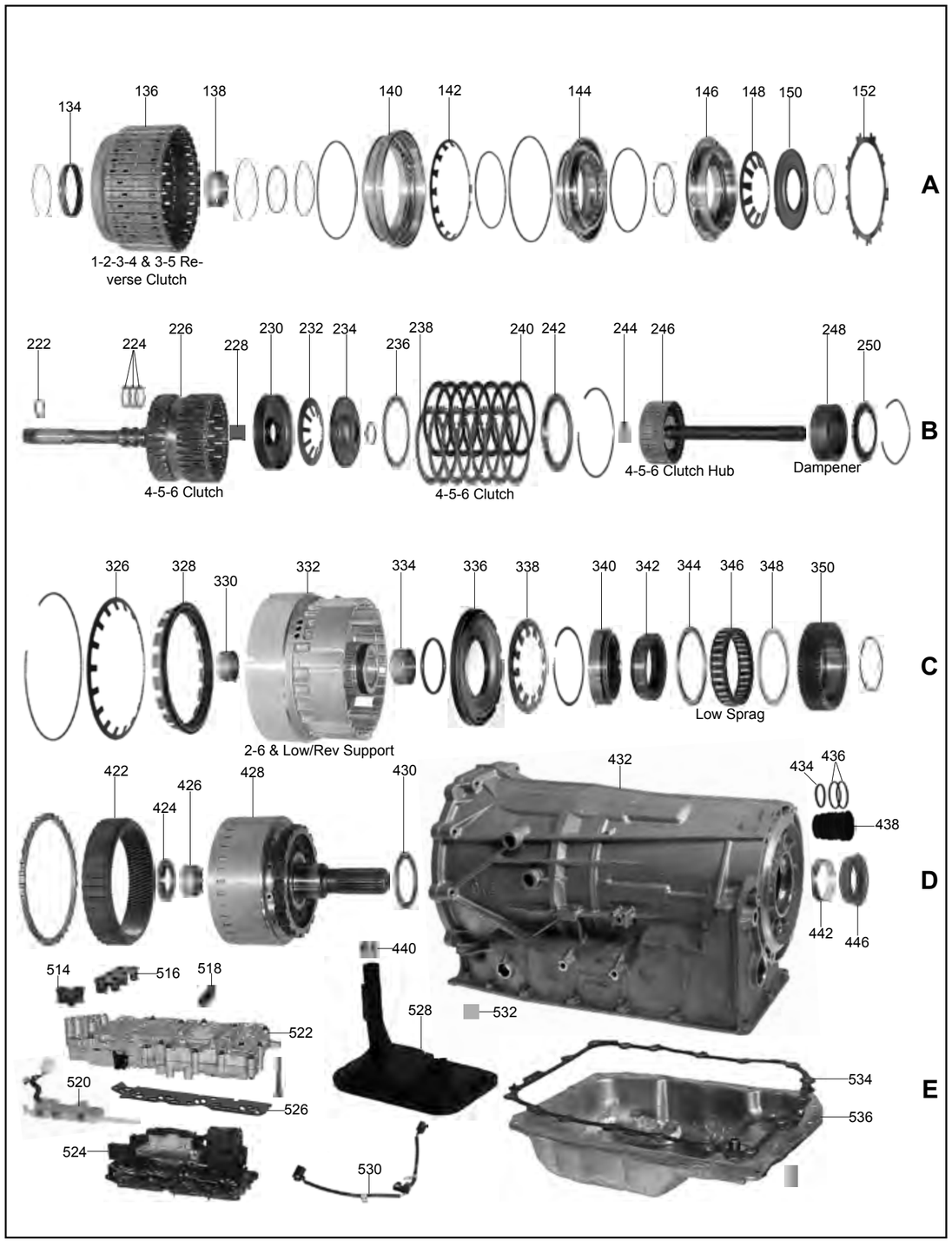
A
B
C
D
E
134
136
138
140
142
144
146
148
150
152
1-2-3-4 & 3-5 Reverse Clutch
222
224
226
228
230
232
234
236
238
240
242
244
246
248
250
4-5-6 Clutch
4-5-6 Clutch
4-5-6 Clutch Hub
Dampener
326
328
330
332
334
336
338
340
342
344
346
348
350
2-6 & Low/Rev Support
Low Sprag
422
424
426
428
430
432
434
436
438
440
442
446
514
516
518
520
522
524
526
528
530
532
534
536

ILL.		Qty.	Year	Part #	Ref. #
MASTER OVERHAUL KITS (WITH STEELS)					
N.I.	6L45, 6L50 (with Bonded Pistons)	1	07-Up	45006	N.L.
N.I.	6L80 (with Bonded Pistons)	1	06-Up	45006A	N.L.
N.I.	6L90 (with Bonded Pistons)	1	07-Up	45006B	N.L.
MASTER OVERHAUL KITS (LESS STEELS)					
N.I.	6L45, 6L50 (with Bonded Pistons)	1	07-Up	45004	N.L.
N.I.	6L80 (with Bonded Pistons)	1	06-Up	45004A	N.L.
N.I.	6L90 (with Bonded Pistons)	1	07-Up	45004B	N.L.
OVERHAUL KITS (WITH RINGS AND SEALS)					
N.I.	6L45, 6L50 (w/o Bonded Pistons)	1	07-Up	45002	N.L.
N.I.	6L80 (w/o Bonded Pistons)	1	06-Up	45002A	N.L.
N.I.	6L90 (w/o Bonded Pistons)	1	07-Up	45002B	N.L.
BONDED PISTONS					
N.I.	Piston Kit (6L45, 6L50)	1	07-Up	45960K	N.L.
N.I.	Piston Kit (6L80, 6L90)	1	06-Up	45960AK	N.L.
150A	Piston, 1-2-3-4 Clutch Balance (Bonded) (6L45, 6L50)	1	07-Up	45984	N.L.
150A	Piston, 1-2-3-4 Clutch Balance (Bonded) (6L80, 6L90)	1	06-Up	45984A	24224708
230B	Piston, 4-5-6 Clutch (Bonded) (6L45, 6L50)	1	07-Up	45960	N.L.
230B	Piston, 4-5-6 Clutch (Bonded) (6L80, 6L90)	1	06-Up	45960A	24232416
234B	Piston, 4-5-6 Clutch Balance (Bonded) (6L45, 6L50)	1	07-Up	45980	N.L.
234B	Piston, 4-5-6 Clutch Balance (Bonded) (6L80, 6L90)	1	06-Up	45980A	24232417
328C	Piston, 2-6 Clutch (Bonded) (6L45, 6L50)	1	07-Up	45962	N.L.
328C	Piston, 2-6 Clutch (Bonded) (6L80, 6L90)	1	06-Up	45962A	24224169
336C	Piston, Low Reverse Clutch (Bonded) (6L45, 6L50)	1	07-Up	45967	N.L.
336C	Piston, Low Reverse Clutch (Bonded) (6L80, 6L90)	1	06-Up	45967A	24224172
GASKETS & O-RINGS					
106A	Bell to Case Seal (6L45, 6L50)	1	07-Up	45311	N.L.
106A	Bell to Case Seal (6L80, 6L90)	1	06-Up	45311A	N.L.
500E	Case to Extension Housing Seal (6L45, 6L50)	1	07-Up	45348	N.L.
500E	Case to Extension Housing Seal (6L80, 6L90)	1	07-Up	45348A	N.L.
534E	Pan Gasket (6L80)	1	06-Up	45300A	24224781
534E	Pan Gasket (6L90)	1	07-Up	45300B	24226850
534E	Pan Gasket (6L45, 6L50)	1	07-Up	45300	24225800
METAL CLAD SEALS					
100A	Front Pump	1	06-Up	45070	24237531
506E	Rear (2wd) (6L50)	1	07-Up	45074C	24228876
506E	Rear (2wd) (6L80)	1	06-Up	45074	24233898
506E	Rear (2wd) (6L90)	1	07-Up	45074B	N.L.
532E	Manual Lever	1	06-Up	44072	N.L.
N.I.	Adaptor Housing (4wd) (6L80, 6L90)	1	06-Up	45074A	24238076
SEALING RINGS & KITS					
N.I.	Sealing Ring Kit (6L45, 6L50)	1	07-Up	45175	N.L.
N.I.	Sealing Ring Kit (6L80, 6L90)	1	06-Up	45175A	N.L.
FRICTION PLATES					
202B	1-2-3-4 (6L45, 6L50)	5	07-Up	45108A	N.L.
202B	1-2- 3-4 (6L80, 6L90)	5-6	06-Up	45108	24224147
210B	3-5-Reverse (6L45, 6L50)	4	07-Up	45106A	N.L.
210B	3-5-Reverse (6L80, 6L90)	4-5	06-Up	45106	24235681
240B	4-5-6 (One Sided Internal Teeth) (6L45, 6L50)	5	07-Up	45100A	N.L.
240B	4-5-6 (6L80, 6L90)	6-7	06-Up	45100	2424158
240B	4-5-6 (One Sided External Teeth) (6L45, 6L50)	5	07-Up	45120A	N.L.
320C	2-6 (One Sided External Teeth) (6L45, 6L50)	5	07-Up	45124A	N.L.
320C	2-6 (One Sided Internal Teeth) (6L45, 6L50)	5	07-Up	45104A	N.L.
320C	2-6 (6L80, 6L90)	5-6	06-Up	45104	24240221
404D	Low/ Reverse (6L45, 6L50) (54T)	6	07-Up	45114A	N.L.
404D	Low/ Reverse (6L45R) (44T)	6	07-Up	45114B	N.L.
404D	Low/ Reverse (6L80, 6L90)	5-7	06-Up	45114	24235460

ILL.		Qty.	Year	Part #	Ref. #
STEEL PLATES					
152A	1-2-3-4 (Waved) (6L45, 6L50)	1	07-Up	45129A	N.L.
152A	1-2-3-4 (Waved) (6L80, 6L90)	1	06-Up	45129	N.L.
200B	1-2-3-4 (6L45, 6L50)	5	07-Up	45128A	N.L.
200B	1-2-3-4 (6L80, 6L90)	5-6	06-Up	45128	24232499
208B	3-5-Reverse (6L45, 6L50)	4	07-Up	45126A	N.L.
208B	3-5-Reverse (6L80, 6L90)	4-5	06-Up	45126	24232498
236B	4-5-6 (Waved) (6L45, 6L50)	1	07-Up	45121A	N.L.
236B	4-5-6 (Waved) (6L80, 6L90)	1	06-Up	45121	N.L.
238B	4-5-6 (6L80, 6L90)	6-7	06-Up	45120	24224648
322C	2-6 (Waved) (6L80, 6L90)	1	06-Up	45125	N.L.
322C	2-6 (6L80, 6L90)	5-6	06-Up	45124	24232497
322C	2-6 (Waved) (6L45, 6L50)	1	07-Up	45125A	N.L.
402D	Low/ Reverse (6L45, 6L50)	6	06-Up	45134A	N.L.
402D	Low/ Reverse (6L80, 6L90)	5-6	06-Up	45134	24232496
PRESSURE PLATES					
204B	Forward (1-2-3-4) (6L80, 6L90)	1	06-Up	45148	N.L.
204B	Forward (1-2-3-4) (6L45, 6L50)	1	07-Up	45148A	N.L.
212B	Direct (3-5/Reverse) (6L80, 6L90)	1	06-Up	45146	N.L.
212B	Direct (3-5/Reverse) (6L45, 6L50)	1	07-Up	45146A	N.L.
242B	Overdrive (4-5-6) (6L80, 6L90)	1	06-Up	45140	N.L.
242B	Overdrive (4-5-6) (6L45, 6L50)	1	07-Up	45140A	N.L.
318C	Intermediate (2-6) (6L45, 6L50)	1	07-Up	45144A	N.L.
318C	Intermediate (2-6) (6L80, 6L90)	1	06-Up	45144	N.L.
406D	Low/ Reverse (6L80, 6L90)	1	06-Up	45154	N.L.
406D	Low/Reverse (6L45, 6L50)	1	07-Up	45154A	N.L.
FILTERS					
526E	Solenoid Screen	1	06-Up	45016	N.L.
528E	6L45	1	07-Up	45010	N.L.
528E	6L50, 6L80, 6L90 (Exc 08-09 Pontiac/10-Up Camaro) 6.320 Height	1	06-Up	45010A	24236933
528E	6L80 (Pontiac) 5.760 Height	1	08-09	45010B	24236932
N.I.	6L50 (10 - Up Camaro) 6.320 Height with step	1	10-Up	45010C	N.L.
BUSHINGS					
N.I.	Bushing Kit (6L45, 6L50)	1	07-Up	45030	N.L.
N.I.	Bushing Kit (6L80, 6L90)	1	06-Up	45030A	N.L.
THRUST WASHERS/BEARINGS					
WASHERS					
N.I.	Thrust Washer Kit (6L45, 6L50)	1	07-Up	45200	N.L.
N.I.	Thrust Washer Kit (6L80, 6L90)	1	06-Up	45200A	N.L.
BEARINGS					
N.I.	Bearing Kit (6L45, 6L50)	1	07-Up	45201	N.L.
N.I.	Bearing Kit (6L80, 6L90)	1	06-Up	45201A	N.L.
ELECTRICAL COMPONENTS					
438D	Sleeve, Case Connector (6L80, 6L90)	1	06-Up	95444	6L2Z-7G276AA
520E	Sensor, MLPS (6L45, 6L50)	1	07-Up	45410	N.L.
520E	Sensor, MLPS (6L80, 6L90)	1	06-Up	45410A	N.L.
594D	Solenoid Assembly (6L45, 6L50)	1	07-Up	45420	N.L.
594D	Solenoid Assembly (6L80, 6L90)	1	06-Up	45420A	N.L.
N.I.	Sensor, Input Speed	1	07-Up	45436	N.L.
N.I.	Sensor, Output Speed (Long) (up to 3/12)	1	07-12	45436	24265535
N.I.	Sensor, Output Speed (Short) (4/12 and up)	1	12-Up	45436A	24265536
PUMPS					
122A	Pump Cover (Stator) (6L45, 6L50)	1	07-Up	45520	N.L.
122A	Pump Cover (Stator) (6L80, 6L90) (Updated) (Non Rotational Ring Type)	1	06-Up	45520B	24248573

ILL.		Qty.	Year	Part #	Ref. #
PUMP COMPONENTS					
110A	Slide (13 Vane, .708)	1	06-Up	45534	N.L.
112A	Rings	2	06-Up	45538	N.L.
114A	Guide	1	06-Up	45539	N.L.
116A	Rotor (13 Vane, .708)	1	06-Up	45532	N.L.
160A	Vanes	13	06-Up	45533	N.L.
N.I.	Rotor Kit (13 Vane, .708)	1	06-Up	45531K	N.L.
DRUMS & COMPONENTS					
136A	Drum, Forward & Direct (1-2-3-4 & 3-5/Rev) (6L45, 6L50)	1	07-Up	45554	N.L.
136A	Drum, Forward & Direct (1-2-3-4 & 3-5/Rev) (6L80)	1	06-Up	45554A	24237556
136A	Drum, Forward & Direct (1-2-3-4 & 3-5/Rev) (6L90)	1	07-Up	45554B	N.L.
142A	Belleville Spring, 3-5-Reverse Clutch (6L45, 6L50)	1	07-Up	45975	N.L.
142A	Belleville Spring, 3-5-Reverse Clutch (6L80, 6L90)	1	06-Up	45975A	N.L.
148A	Belleville Spring, 2-6 Clutch (6L45, 6L50)	1	07-Up	45972	N.L.
148A	Belleville Spring, 2-6 Clutch (6L80, 6L90)	1	06-Up	45972A	N.L.
148A	Belleville Spring, 1-2-3-4 Clutch (6L45, 6L50)	1	07-Up	45974	N.L.
148A	Belleville Spring, 1-2-3-4 Clutch (6L80, 6L90)	1	06-Up	45974A	N.L.
150A	Piston, 1-2-3-4 Clutch Balance (Bonded) (6L45, 6L50)	1	07-Up	45984	N.L.
150A	Piston, 1-2-3-4 Clutch Balance (Bonded) (6L80, 6L90)	1	06-Up	45984A	24224708
226B	Drum, Overdrive w/ Shaft (4-5-6) (5 Clutch) (6L40, 6L50)	1	07-Up	45550	N.L.
226B	Drum, Overdrive w/ Shaft (4-5-6) (6 Clutch) (6L80)	1	06-Up	45550A	N.L.
226B	Drum, Overdrive w/ Shaft (4-5-6) (7 Clutch) (6L90)	1	07-Up	45550B	N.L.
230B	Piston, 4-5-6 Clutch (Bonded) (6L45, 6L50)	1	07-Up	45960	N.L.
230B	Piston, 4-5-6 Clutch (Bonded) (6L80, 6L90)	1	06-Up	45960A	24232416
232B	Belleville Spring, 4-5-6 Clutch (6L45, 6L50)	1	07-Up	45970	N.L.
232B	Belleville Spring, 4-5-6 Clutch (6L80, 6L90)	1	06-Up	45970A	N.L.
234B	Piston, 4-5-6 Clutch Balance (Bonded) (6L45, 6L50)	1	07-Up	45980	N.L.
234B	Piston, 4-5-6 Clutch Balance (Bonded) (6L80, 6L90)	1	06-Up	45980A	24232417
246B	Hub, Overdrive w/ Shaft (4-5-6) (6L45, 6L50)	1	07-Up	45570	N.L.
246B	Hub, Overdrive w/ Shaft (4-5-6) (6L80)	1	06-Up	45570A	N.L.
246B	Hub, Overdrive w/ Shaft (4-5-6) (6L90)	1	07-Up	45570B	N.L.
304C	Hub, 1-2-3-4 (5 Clutch) (6L45, 6L50)	1	07-Up	45574	N.L.
304C	Hub, 1-2-3-4 (6 Clutch) (6L80)	1	06-Up	45574A	N.L.
304C	Hub 1-2-3-4 (6 Clutch) (6L90)	1	07-Up	45574B	N.L.
310C	Hub, 3-5, Reverse (6L45, 6L50)	1	07-Up	45575	N.L.
310C	Hub, 3-5, Reverse (6L80)	1	06-Up	45575A	N.L.
310C	Hub, 3-5, Reverse (6L90)	1	07-Up	45575B	N.L.
328C	Piston, 2-6 Clutch (Bonded) (6L45, 6L50)	1	07-Up	45962	N.L.
328C	Piston, 2-6 Clutch (Bonded) (6L80, 6L90)	1	06-Up	45962A	24224169
336C	Piston, Low Reverse Clutch (Bonded) (6L45, 6L50)	1	07-Up	45967	N.L.
336C	Piston, Low Reverse Clutch (Bonded) (6L80, 6L90)	1	06-Up	45967A	24224172
338C	Belleville Spring, Low Reverse Clutch (6L45, 6L50)	1	07-Up	45977	N.L.
338C	Belleville Spring, Low Reverse Clutch (6L80, 6L90)	1	06-Up	45977A	N.L.
PLANETS & COMPONENTS					
214B	Front (4 Gear) (6L45, 6L50)	1	07-Up	45582	N.L.
214B	Front (4 Gear) (6L80)	1	06-Up	45582A	N.L.
214B	Front (5 Gear) (6L80)	1	06-Up	45582AA	N.L.
214B	Front (6 Gear) (6L90)	1	07-Up	45582B	N.L.
418D	Rear (Output) (6L45, 6L50)	1	07-Up	45584	N.L.
418D	Rear (Output) (6L80) (2 Ring Gear Design)	1	06-12	45584A	N.L.
418D	Rear (Output) (6L90) (2 Ring Gear Design)	1	07-12	45584B	N.L.
420D	Ring Gear, Rear (Front) (6L45, 6L50)	1	07-Up	45594	N.L.
420D	Ring Gear, Rear (Front) (6L80) (2 Ring Gear Design)	1	06-12	45594A	N.L.
420D	Ring Gear, Rear (Front) (6L90) (2 Ring Gear Design)	1	07-12	45594B	N.L.
422D	Ring Gear, Rear (Rear) (6L45, 6L50)	1	07-Up	45595	N.L.
422D	Ring Gear, Rear (Rear) (6L80) (2 Ring Gear Design)	1	06-12	45595A	N.L.
422D	Ring Gear, Rear (Rear) (6L90) (2 Ring Gear Design)	1	07-12	45595B	N.L.
SUN GEARS					
216B	Sun Gear, Forward (6L45, 6L50)	1	07-Up	45612	N.L.
216B	Sun Gear, Forward (6L80, 6L90)	1	06-Up	45612A	N.L.
412D	Sun Gear, Rear (Output) (Front) (6L45, 6L50)	1	07-Up	45614	N.L.
412D	Sun Gear, Rear (Output) (Front) (6L80, 6L90)	1	06-Up	45614A	N.L.
416D	Sun Gear, Rear (Output) (Rear) (6L45, 6L50)	1	07-Up	45615	N.L.
416D	Sun Gear, Rear (Output) (Rear) (6L80)	1	06-Up	45615A	N.L.
416D	Sun Gear, Rear (Output) (Rear) (6L90)	1	07-Up	45615B	N.L.

ILL.		Qty.	Year	Part #	Ref. #
ONE WAY CLUTCHES					
246C	Sprag Assembly, Low (6L45, 6L50)	1	07-Up	45642	N.L.
246C	Sprag Assembly, Low (6L80)	1	06-Up	45642A	N.L.
246C	Sprag Assembly, Low (6L90)	1	07-Up	45642B	N.L.
SHELLS & SUPPORTS					
332C	Center Support (6L45, 6L50)	1	07-Up	45630	N.L.
332C	Center Support (6L80)	1	06-Up	45630A	N.L.
332C	Center Support (6L90)	1	07-Up	45630B	N.L.
SHAFTS					
428D	Output Shaft (2wd) (6L45, 6L50)	1	07-Up	45678	N.L.
428D	Output Shaft (2wd) (6L80) (15.125" Long) (2 Ring Gear Design)	1	06-12	45678A	N.L.
428D	Output Shaft (2wd) (6L80) (11.250" Long) (2 Ring Gear Design)	1	06-12	45678AA	N.L.
428D	Output Shaft (2wd) (6L80) (8 5/16" Long) (2 Ring Gear Design)	1	06-12	45678AB	N.L.
428D	Output Shaft (6L90) (4wd) (2 Ring Gear Design)	1	07-12	45678B	N.L.
VALVE BODIES & GOVERNORS					
522E	Valve Body (6L45, 6L50)	1	07-Up	45740	N.L.
522E	Valve Body (6L80)	1	06-Up	45740A	N.L.
522E	Valve Body (6L90)	1	07-Up	45740B	N.L.
CASES/HOUSINGS & COMPONENTS					
432D	Case (6L45, 6L50)	1	07-Up	45760	N.L.
432D	Case (6L80)	1	06-Up	45760A	N.L.
432D	Case (6L90)	1	07-Up	45760B	N.L.
536E	Pan (6L45, 6L50)	1	07-Up	45765	N.L.
536E	Pan (6L80)	1	06-Up	45765A	N.L.
536E	Pan (6L90)	1	07-Up	45765B	N.L.
MISCELLANEOUS COMPONENTS					
N.I.	Snap Ring Pliers, Center Support	1	06-Up	T-6800	N.L.
N.I.	Dampener, Overdrive (4-5-6) (6L45, 6L50)	1	07-Up	45850	N.L.
N.I.	Dampener, Overdrive (4-5-6) (6L80)	1	06-Up	45850A	N.L.
N.I.	Dampener, Overdrive (4-5-6) (6L90)	1	07-Up	45850B	N.L.
TECHNICAL MANUALS					
N.I.	6L45, 6L50	1	07-Up	45400	N.L.
N.I.	6L80	1	06-Up	45400A	GM6L80
N.I.	Transmission Guide (6 Speed)	1	06-Up	45400B	TMG-6SPEED

Notes

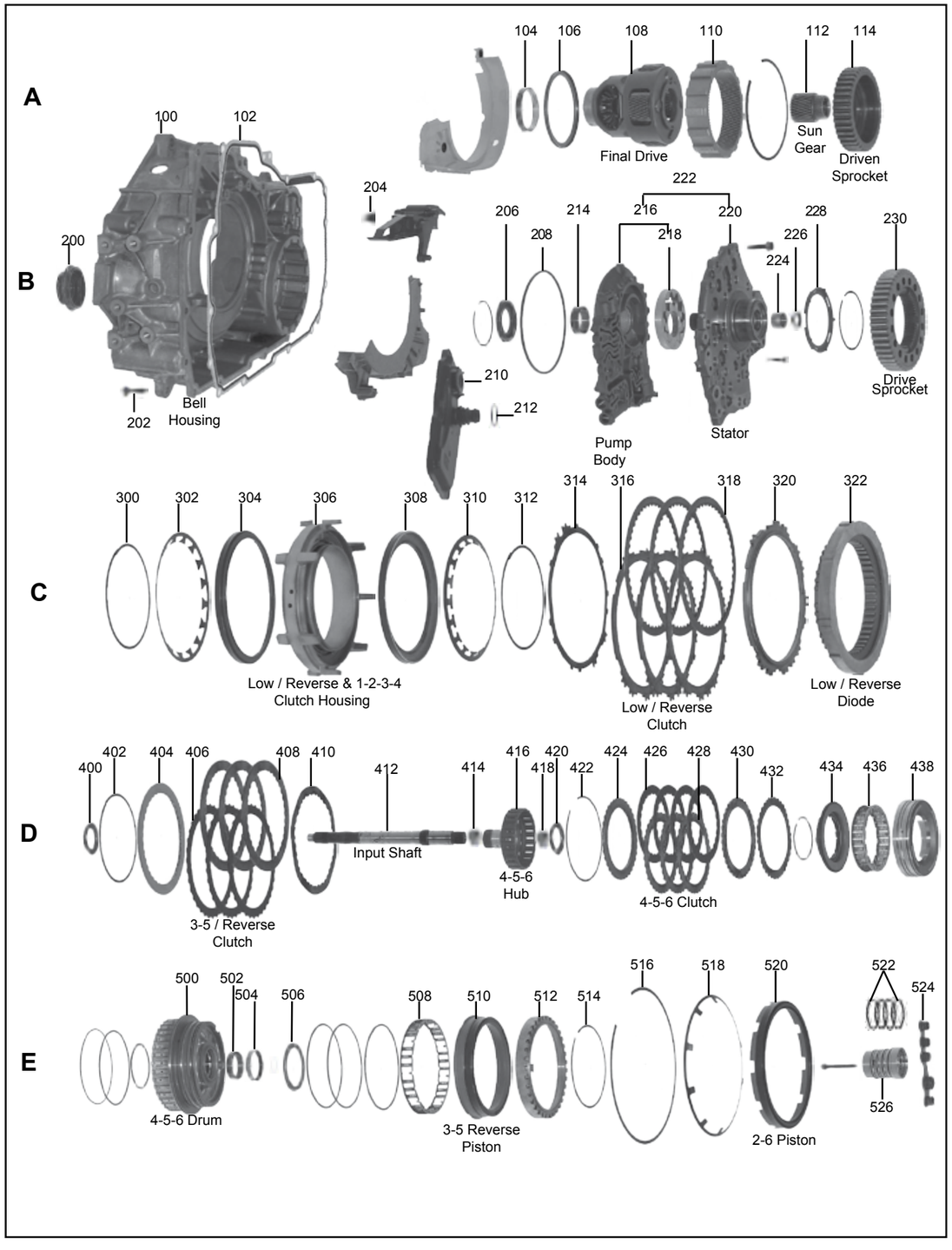
A
B
C
D
E
100
102
104
106
108
110
112
114
Final Drive
Sun Gear
Driven Sprocket
200
202
Bell Housing
204
206
208
210
212
214
216
218
220
222
224
226
228
230
Pump Body
Stator
Drive Sprocket
300
302
304
306
308
310
312
314
316
318
320
322
Low / Reverse & 1-2-3-4 Clutch Housing
Low / Reverse Clutch
Low / Reverse Diode
400
402
404
406
408
410
412
414
416
418
420
422
424
426
428
430
432
434
436
438
Input Shaft
4-5-6 Hub
4-5-6 Clutch
3-5 / Reverse Clutch
500
502
504
506
508
510
512
514
516
518
520
522
524
526
4-5-6 Drum
3-5 Reverse Piston
2-6 Piston

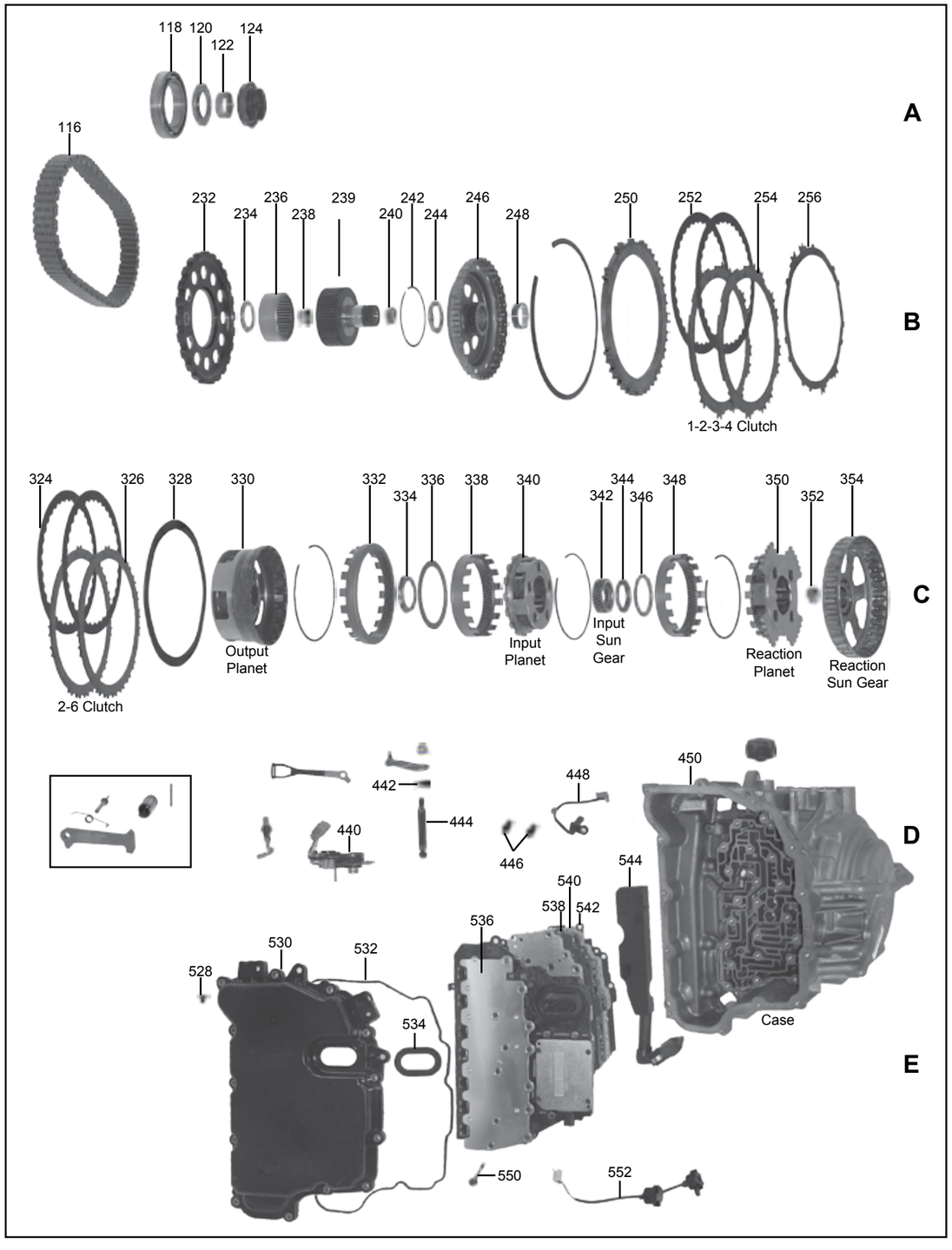
A
B
C
D
E
116
118
120
122
124
1-2-3-4 Clutch
2-6 Clutch
Output Planet
Input Planet
Input Sun Gear
Reaction Planet
Reaction Sun Gear
Case

ILL.		Qty.	Year	Part #	Ref. #
MASTER OVERHAUL KITS (WITH STEELS)					
N.I.	6T40, 6T45 (GM)	1	08-Up	46006	N.L.
N.I.	6F35 (Ford)	1	09-Up	46006A	N.L.
MASTER OVERHAUL KITS (LESS STEELS)					
N.I.	6T40, 6T45 (GM)	1	08-Up	46004	N.L.
N.I.	6F35 (Ford)	1	09-Up	46004A	N.L.
OVERHAUL KITS (WITH RINGS AND SEALS)					
N.I.	6T40, 6T45 (GM)	1	08-Up	46002	N.L.
N.I.	6F35 (Ford)	1	09-Up	46002A	N.L.
BONDED PISTONS					
N.I.	Piston Kit (GM)	1	08-Up	46960	N.L.
N.I.	Piston Kit (Ford)	1	09-Up	46960A	N.L.
304C	Piston, 1-2-3-4 (Bonded)	1	08-Up	46964	N.L.
308C	Piston, Low/ Reverse (Bonded)	1	08-Up	46967	N.L.
434D	Retainer, 4-5-6 (Bonded) (GM)	1	08-Up	46980	N.L.
434D	Retainer, 4-5-6 (Bonded) (Ford)	1	09-Up	46980A	N.L.
510E	Piston, 3-5 Reverse (Bonded)	1	08-Up	46966	N.L.
520E	Piston, 2-6 (Bonded) (GM)	1	08-Up	46962	N.L.
520E	Piston, 2-6 (Bonded) (Ford)	1	09-Up	46962A	N.L.
GASKETS & O-RINGS					
102A	Gasket, Bell Housing (GM)	1	08-Up	46318	N.L.
208B	Pump O Ring	1	08-Up	46311	N.L.
532E	Gasket, Valve Body Cover (GM)	1	08-Up	46301	N.L.
532E	Gasket, Valve Body Cover (Ford)	1	09-Up	46301A	N.L.
METAL CLAD SEALS					
124A	Axle, Left (GM)	1	08-Up	46077	N.L.
124A	Axles, Left (Ford)	1	09-Up	46077A	N.L.
200B	Axle, Right (GM)	1	08-Up	46076	N.L.
200B	Axle, Right (Ford)	1	09-Up	46076A	N.L.
206B	Converter (GM)	1	08-Up	46070	N.L.
206B	Converter (Ford)	1	09-Up	46070A	N.L.
442D	Manual Lever (GM)	1	08-Up	46072	N.L.
442D	Manual Lever (Ford)	1	09-Up	46072A	N.L.
SEALING RINGS & KITS					
N.I.	Sealing Ring Kit	1	08-Up	46175K	N.L.
FRICTION PLATES					
252B	Forward (1-2-3-4) (GM)	2	08-Up	46108	N.L.
252B	Forward (1-2-3-4) (Ford)	2	09-Up	46108A	N.L.
318C	Low/ Reverse (GM)	3	08-Up	46114	N.L.
318C	Low/Reverse (Ford)	3	09-Up	46114A	N.L.
324C	Intermediate (2-6) (GM)	2	08-Up	46104	N.L.
324C	Intermediate (2-6) (Ford)	2	09-Up	46104A	N.L.
408D	Direct (3-5/Reverse) (GM)	3	08-Up	46106	N.L.
408D	Direct (3-5/Reverse) (Ford)	3	09-Up	46106A	N.L.
428D	Overdrive (4-5-6)	4-5	08-Up	46100	N.L.
STEEL PLATES					
254B	Forward (1-2-3-4) (GM)	2	08-Up	46128	N.L.
254B	Forward (1-2-3-4) (Ford)	2	09-Up	46128A	N.L.
256B	Cushion, 1-2-3-4 (GM)	1	08-Up	46853	N.L.
256B	Cushion, 1-2-3-4 (Ford)	1	09-Up	46853A	N.L.
314C	Cushion, Low/ Reverse (GM)	1	08-Up	46857	N.L.
314C	Cushion, Low/ Reverse (Ford)	1	09-Up	46857A	N.L.
316C	Low/ Reverse (GM)	3	08-Up	46134	N.L.
316C	Low/Reverse (Ford)	3	09-Up	46134A	N.L.
326C	Intermediate (2-6) (GM)	2	08-Up	46144	N.L.
326C	Intermediate (2-6) (Ford)	2	09-Up	46144A	N.L.
328C	Cushion, 2-6 (GM)	1	08-Up	46852	N.L.
328C	Cushion, 2-6 (Ford)	1	09-Up	46852A	N.L.
406D	Direct (3-5/Reverse) (GM)	3	08-Up	46126	N.L.

ILL.		Qty.	Year	Part #	Ref. #
STEEL PLATES (Cont.)					
406D	Direct (3-5/Reverse) (Ford)	3	09-Up	46126A	N.L.
410D	Cushion, 3-5 Reverse (GM)	1	08-Up	46856	N.L.
410D	Cushion, 3-5 Reverse (Ford)	1	09-Up	46856A	N.L.
426D	Overdrive (4-5-6) (GM)	3	08-Up	46120	N.L.
426D	Overdrive (4-5-6) (Ford)	5	09-Up	46120A	
432D	Cushion, 4-5-6 (GM)	1	08-Up	46850	N.L.
PRESSURE PLATES					
250B	Forward (1-2-3-4)	1	08-Up	46148	N.L.
320C	Low/ Reverse	1	08-Up	46154	N.L.
404D	Direct (3-5/Reverse) (GM)	1	08-Up	46146	N.L.
404D	Direct (3-5/Reverse) (Ford)	1	09-Up	46146A	N.L.
424D	Overdrive (4-5-6) (GM) Backing	1	08-Up	46140	N.L.
424D	Overdrive (4-5-6) (Ford) Backing	1	09-Up	46140A	N.L.
N.I.	Overdrive (4-5-6) (GM) Apply	1	08-Up	46144	N.L.
FILTERS					
210B	Filter, Main (6T40, 6T45) (GM)	1	08-Up	46010	N.L.
210B	Filter, Main (6F35) (Ford)	1	09-Up	46010A	N.L.
N.I.	Screen/Gasket, Solenoid Plate	1	08-Up	46016	N.L.
BUSHINGS					
N.I.	Bushing Kit (GM)	1	08-Up	46030	N.L.
N.I.	Bushing Kit (Ford)	1	09-Up	46030A	N.L.
104A	Bell Housing (GM)	1	08-Up	46031	N.L.
104A	Bell Housing (Ford)	1	09-Up	46031A	N.L.
122A	Case	1	08-Up	46064	N.L.
214B	Pump	1	08-Up	46034	N.L.
224B	Stator (GM)	1	08-Up	46036	N.L.
224B	Stator (Ford)	1	09-Up	46036A	N.L.
238B	Drive Sprocket Hub	2	08-Up	46063	N.L.
248B	Output Sun Gear	1	08-Up	46062	N.L.
352C	Reaction Sun Gear	1	08-Up	46056	N.L.
414D	4-5-6 Hub	2	08-Up	46039	N.L.
502E	4-5-6 Drum (Small)	1	08-Up	46049	N.L.
504E	4-5-6 Drum (Large)	1	08-Up	46048	N.L.
THRUST WASHERS/BEARINGS					
WASHERS					
228B	Stator, Rear (GM)	1	08-Up	46211	N.L.
228B	Stator, Rear (Ford)	1	09-Up	46211A	N.L.
BEARINGS					
N.I.	Bearing Kit (GM)	1	08-Up	46201	N.L.
N.I.	Bearing Kit (Ford)	1	09-Up	46201A	N.L.
106A	Bell Housing to Differential (GM)	1	08-Up	46293	N.L.
106A	Bell Housing to Differential (Ford)	1	09-Up	46293A	N.L.
120A	Sprocket, Driven (Rear)	1	08-Up	46281	N.L.
234B	Stator, Rear	1	08-Up	46226	N.L.
244B	Sprocket, Drive	1	08-Up	46279	N.L.
334C	Planet, Output (Rear)	1	08-Up	46251	N.L.
344C	Sun Gear, Input (Rear)	1	08-Up	46242	N.L.
346C	Planet, Input (Rear) (GM)	1	08-Up	46238	N.L.
346C	Planet, Input (Rear) (Ford)	1	09-Up	46238A	N.L.
400D	4-5-6 Hub	2	08-Up	46224	N.L.
506E	4-5-6 Drum to Case	1	08-Up	46221	N.L.
N.I.	Differential to Sun Gear (GM)	1	08-Up	46247	N.L.
N.I.	Differential to Sun Gear (Ford)	1	09-Up	46247A	N.L.
ELECTRICAL COMPONENTS					
440D	Switch, IMS (GM)	1	08-Up	46410	N.L.
440D	Switch, IMS (Ford)	1	09-Up	46410A	N.L.
448D	Sensor, Output (OSS) (GM)	1	08-Up	46436	N.L.
448D	Sensor, Output (OSS) (Ford)	1	09-Up	46436A	N.L.
536E	Solenoid Group (GM)	1	08-Up	46420K	N.L.

ILL.		Qty.	Year	Part #	Ref. #
ELECTRICAL COMPONENTS (Cont.)					
536E	Solenoid Group (Ford)	1	09-Up	46420AK	N.L.
552E	Sensor, Input with Connector (ISS) (GM)	1	08-Up	46438	N.L.
552E	Sensor, Input with Connector (ISS) (Ford)	1	09-Up	46438A	N.L.
PUMPS					
216B	Pump Body (GM)	1	08-Up	46510	N.L.
216B	Pump Body (Ford)	1	09-Up	46510A	N.L.
222B	Pump Assembly (GM)	1	08-Up	46500	N.L.
222B	Pump Assembly (Ford)	1	09-Up	46500A	N.L.
PUMP COMPONENTS					
218B	Gears (GM)	1	08-Up	46530	N.L.
218B	Gears (Ford)	1	09-Up	46530A	N.L.
220B	Stator (GM)	1	08-Up	46520	N.L.
220B	Stator (Ford)	1	09-Up	46520A	N.L.
DRUMS & COMPONENTS					
302C	Return Spring, 1-2-3-4 (GM)	1	08-Up	46974	N.L.
302C	Return Spring, 1-2-3-4 (Ford)	1	09-Up	46974A	N.L.
304C	Piston, 1-2-3-4 (Bonded)	1	08-Up	46964	N.L.
308C	Piston, Low/ Reverse (Bonded)	1	08-Up	46967	N.L.
310C	Return Spring, Low/ Reverse (GM)	1	08-Up	46977	N.L.
310C	Return Spring, Low/ Reverse (Ford)	1	09-Up	46977A	N.L.
416D	Hub, 4-5-6	1	08-Up	46570	N.L.
434D	Retainer, 4-5-6 (Bonded) (GM)	1	08-Up	46980	N.L.
434D	Retainer, 4-5-6 (Bonded) (Ford)	1	09-Up	46980A	N.L.
436D	Return Spring, 4-5-6 (GM)	1	08-Up	46970	N.L.
436D	Return Spring, 4-5-6 (Ford)	1	09-Up	46970A	N.L.
438D	Piston, 4-5-6 (GM)	1	08-Up	46960	N.L.
438D	Piston, 4-5-6 (Ford)	1	09-Up	46960A	N.L.
500E	Drum, 4-5-6 (GM)	1	08-Up	46550	N.L.
500E	Drum, 4-5-6 (Ford)	1	09-Up	46550A	N.L.
508E	Return Spring, 3-5 Reverse (GM)	1	08-Up	46976	N.L.
508E	Return Spring, 3-5 Reverse (Ford)	1	09-Up	46976A	N.L.
510E	Piston, 3-5 Reverse (Bonded)	1	09-Up	46966	N.L.
518E	Return Spring, 2-6 (GM)	1	08-Up	46972	N.L.
518E	Return Spring, 2-6 (Ford)	1	09-Up	46972A	n.L.
520E	Piston, 2-6 (Bonded) (GM)	1	08-Up	46962	N.L.
520E	Piston, 2-6 (Bonded) (Ford)	1	09-Up	46962A	N.L.
PLANETS & COMPONENTS					
330C	Planet, Output (GM)	1	08-Up	46584	N.L.
330C	Planet, Output (Ford)	1	09-Up	46584A	N.L.
340C	Planet, Input (GM)	1	08-Up	46582	N.L.
340C	Planet, Input (Ford)	1	09-Up	46582A	N.L.
350C	Planet, Reaction (GM)	1	08-Up	46580	N.L.
350C	Planet, Reaction (Ford)	1	09-Up	46580A	N.L.
SUN GEARS					
112A	Sun Gear, Final Drive (GM)	1	08-Up	46618	N.L.
112A	Sun Gear, Final Drive (Ford)	1	09-Up	46618A	N.L.
246B	Sun Gear, Output (GM)	1	08-Up	46614	N.L.
246B	Sun Gear, Output (Ford)	1	09-Up	46614A	N.L.
342C	Sun Gear, Input (GM)	1	08-Up	46612	N.L.
342C	Sun Gear, Input (Ford)	1	09-Up	46612A	N.L.
354C	Sun Gear, Reaction (GM)	1	08-Up	46610	N.L.
354C	Sun Gear, Reaction (Ford)	1	09-Up	46610A	N.L.
ONE WAY CLUTCHES					
322C	Low Diode (GM)	1	08-Up	46644	N.L.
322C	Low Diode (Ford)	1	09-Up	46644A	N.L.
SHELLS & SUPPORTS					
306C	Support, Center (GM)	1	08-Up	46632	N.L.
306C	Support, Center (Ford)	1	09-Up	46632A	N.L.
526E	Support, Case Sealing Ring	1	08-Up	46634	N.L.

ILL.		Qty.	Year	Part #	Ref. #
SHAFTS					
239B	Drive Sprocket, Pump (GM)	1	08-Up	46505	N.L.
412D	Input Shaft (GM)	1	08-Up	46670	N.L.
412D	Input Shaft (Ford)	1	09-Up	46670A	N.L.
VALVE BODIES & GOVERNORS					
540E	Valve Body (GM)	1	08-Up	46740	N.L.
540E	Valve Body (Ford)	1	09-Up	46740A	N.L.
DIFFERENTIALS					
108A	Final Drive (Differential Planet) (GM)	1	08-Up	46716	N.L.
108A	Final Drive (Differential Planet) (Ford)	1	09-Up	46716A	N.L.
110A	Ring Gear, Final Drive (GM)	1	08-Up	46598	N.L.
110A	Ring Gear, Final Drive (Ford)	1	09-Up	46598A	N.L.
112A	Sun Gear, Final Drive (GM)	1	08-Up	46618	N.L.
112A	Sun Gear, Final Drive (Ford)	1	09-Up	46618A	N.L.
CHAINS AND SPROCKETS					
114A	Sprocket, Driven (GM)	1	08-Up	46706	N.L.
114A	Sprocket, Driven (Ford)	1	09-Up	46706A	N.L.
116A	Chain, Drive (GM)	1	08-Up	46700	N.L.
116A	Chain, Drive (Ford)	1	09-Up	46700A	N.L.
230B	Sprocket, Drive (GM)	1	08-Up	46705	N.L.
230B	Sprocket, Drive (Ford)	1	09-Up	46705A	N.L.
CASES/HOUSINGS & COMPONENTS					
100A	Bell Housing (GM)	1	08-Up	46750	N.L.
100A	Bell Housing (Ford)	1	09-Up	46750A	N.L.
450D	Case (GM)	1	08-Up	46760	N.L.
450D	Case (Ford)	1	09-Up	46760A	N.L.
530E	Cover, Valve Body (GM)	1	08-Up	46766	N.L.
530E	Cover, Valve Body (Ford)	1	09-Up	46766A	N.L.
MISCELLANEOUS COMPONENTS					
512E	Reluctor, 3-5 Reverse Drum (GM)	1	08-Up	46845	N.L.
512E	Reluctor, 3-5 Reverse Drum (Ford)	1	09-Up	46845A	N.L.
554E	Thermal Element (GM)	1	08-Up	46441	N.L.
554E	Thermal Element (Ford)	1	09-Up	46441A	N.L.
TECHNICAL MANUALS					
N.I.	GM	1	08-Up	46400	N.L.
N.I.	Ford	1	09-Up	46400A	N.L.

Notes

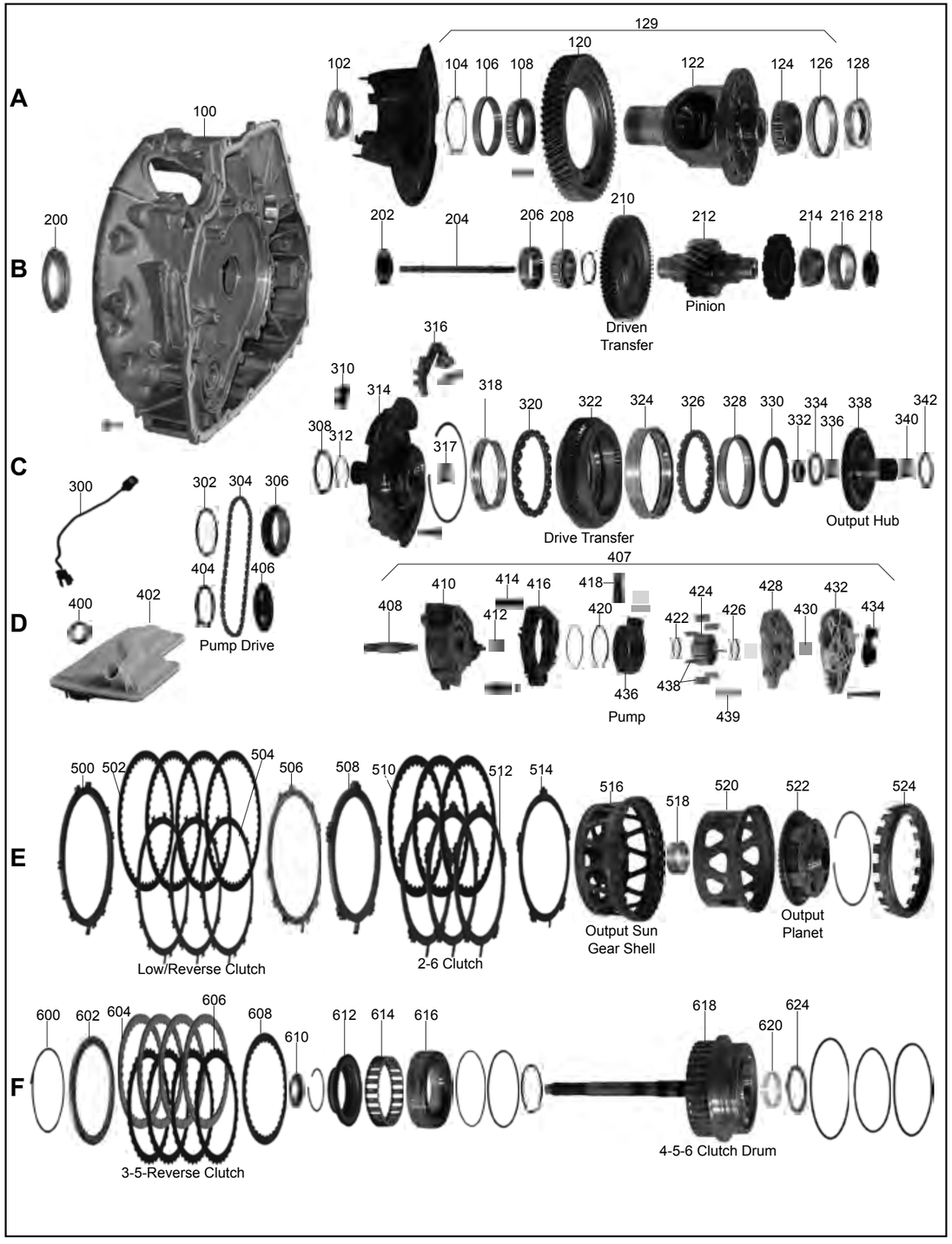
A
B
C
D
E
F
100
102
104
106
108
120
122
124
126
128
129
200
202
204
206
208
210
212
214
216
218
Driven Transfer
Pinion
300
302
304
306
310
312
314
316
317
318
320
322
324
326
328
330
332
334
336
338
340
342
Drive Transfer
Output Hub
400
402
404
406
Pump Drive
407
408
410
412
414
416
418
420
422
424
426
428
430
432
434
436
438
439
Pump
500
502
504
506
508
510
512
514
516
518
520
522
524
Low/Reverse Clutch
2-6 Clutch
Output Sun Gear Shell
Output Planet
600
602
604
606
608
610
612
614
616
618
620
624
3-5-Reverse Clutch
4-5-6 Clutch Drum

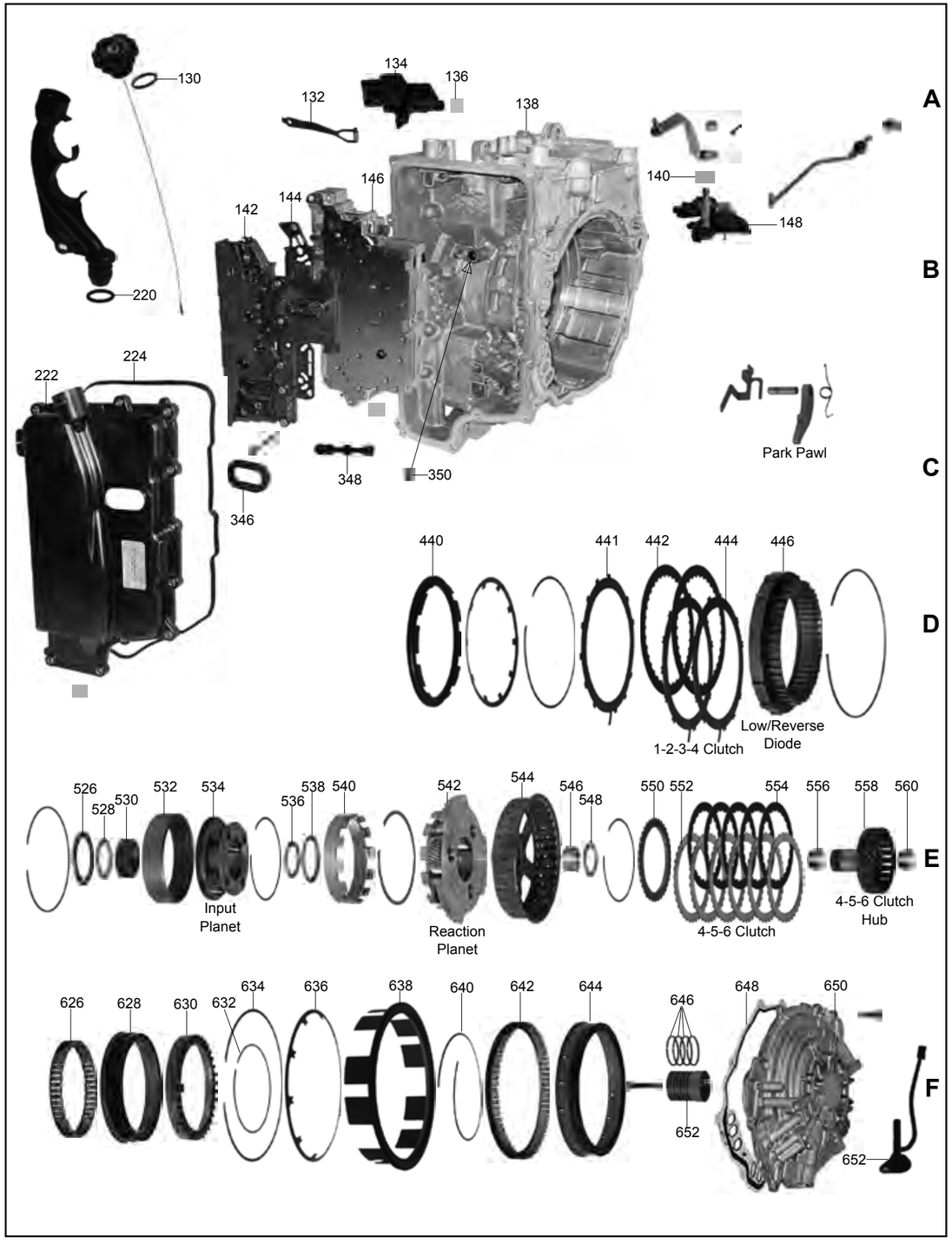
A
B
C
D
E
F
130
132
134
136
138
140
142
144
146
148
220
222
224
346
348
350
Park Pawl
440
441
442
444
446
1-2-3-4 Clutch
Low/Reverse Diode
526
528
530
532
534
536
538
540
542
544
546
548
550
552
554
556
558
560
Input Planet
Reaction Planet
4-5-6 Clutch
4-5-6 Clutch Hub
626
628
630
632
634
636
638
640
642
644
646
648
650
652
652

ILL.		Qty.	Year	Part #	Ref. #
MASTER OVERHAUL KITS (WITH STEELS)					
N.I.	6T70, 6T75 (GM) (w/ Pistons)	1	07-Up	25006	N.L.
N.I.	6F50, 6F55 (Ford) (w/ Pistons)	1	07-Up	25006A	N.L.
MASTER OVERHAUL KITS (LESS STEELS)					
N.I.	6T70, 6T75 (GM) (w/ Pistons)	1	07-Up	25004	N.L.
N.I.	6F50, 6F55 (Ford) (w/ Pistons)	1	07-Up	25004A	N.L.
OVERHAUL KITS (WITH RINGS AND SEALS)					
N.I.	6T70, 6T75 (GM)	1	07-Up	25002	N.L.
N.I.	6F50, 6F55 (Ford)	1	07-Up	25002A	N.L.
BONDED PISTONS					
N.I.	Piston Kit	1	07-Up	25960K	N.L.
440D	Piston, 1-2, 3-4 (Bonded)	1	07-Up	25964	7T4Z-7A262-A
612F	Retainer, 4-5-6 (Bonded)	1	07-Up	25980	7T4Z-7H360-A
628F	Piston, 3-5/ Reverse (Bonded)	1	07-Up	25966	7T4Z-7A262-B
638F	Piston, Low/ Reverse (Bonded)	1	07-Up	25967	7T4Z-7D402-A
644F	Piston, 2-6 (Bonded)	1	07-Up	25962	7T4Z-7E005-A
GASKETS & O-RINGS					
224C	Gasket, Valve Body Cover (All)	1	07-Up	25301	N.L.
648F	Gasket, End Cover (All)	1	07-Up	25304	N.L.
N.I.	Gasket, Bell Housing (GM Only)	1	07-Up	25318	N.L.
N.I.	Gasket Kit, Valve Body (6T70, 6T75)	1	07-Up	25320K	N.L.
N.I.	Gasket Kit, Valve Body (6F50, 6F55)	1	07-Up	25320AK	N.L.
METAL CLAD SEALS					
102A	Axle, Right	1	07-Up	25076	N.L.
128A	Axle, Left	1	07-Up	25077	N.L.
140A	Manual Lever	1	07-Up	25072A	N.L.
200B	Converter	1	07-Up	25070	N.L.
SEALING RINGS & KITS					
N.I.	All	1	07-Up	25175K	N.L.
FRICTION PLATES					
442D	Forward (1-2-3-4)	2	07-Up	25108	DAG09220
502E	Low/ Reverse	4	07-Up	25114	DAF50140
510E	Intermediate (2-6)	3	07-Up	25104	DAG09260
554E	Overdrive (4-5-6)	5-6	07-Up	25100	DAF50060
604F	Direct (3-5/Reverse)	3-4	07-Up	25106	DAG09240
STEEL PLATES					
441D	Forward (1-2-3-4) (Cushion) (GM)	1	07-Up	25129	N.L.
441D	Forward (1-2-3-4) (Cushion) (Ford)	1	07-Up	25129A	N.L.
442D	Forward (1-2-3-4)	2	07-Up	25128	24223728
504E	Low/ Reverse	3	07-Up	25134	24223699
512E	Intermediate (2-6)	3	07-Up	25124	24223706
514E	Intermediate (2-6) (Cushion) (GM)	1	07-Up	25125	N.L.
514E	Intermediate (2-6) (Cushion) (Ford)	1	07-Up	25125A	N.L.
552E	Overdrive (4-5-6)	5-6	07-Up	25120	24223820
606F	Direct (3-5/Reverse)	3-4	07-Up	25126	24223812
608F	Direct (3-5/Reverse) (Cushion) (GM)	1	07-Up	25127	24254103
608F	Direct (3-5/Reverse) (Cushion) (Ford)	1	07-Up	25127A	24254103
N.I.	Low/ Reverse (Cushion) (GM)	1	07-Up	25135	N.L.
PRESSURE PLATES					
500E	Low/ Reverse (Backing Plate) (.151") (GM)	1	07-Up	25155	N.L.
500E	Low/ Reverse (Backing Plate) (.191") (Ford)	1	07-Up	25155A	N.L.
506E	Low/ Reverse (Apply Plate) (.160") (GM)	1	07-Up	25154	N.L.
506E	Low/ Reverse (Apply Plate) (.115") (Ford)	1	07-Up	25154A	N.L.
508E	Intermediate (2-6)	1	07-Up	25144	N.L.
550E	Overdrive (4-5-6)	1	07-Up	25140	N.L.
602F	Direct (3-5/Reverse)	1	07-Up	25146	N.L.

ILL.		Qty.	Year	Part #	Ref. #
FILTERS					
402D	6T70, 6T75 (GM), 6F50, 6F55 (Ford)	1	07-Up	25010	N.L.
BUSHINGS					
N.I.	Bushing Kit, 6T70, 6T75 (All)	1	07-Up	25030	N.L.
THRUST WASHERS/BEARINGS					
WASHERS					
N.I.	Washer Kit (All)	1	07-Up	25200	N.L.
BEARINGS					
N.I.	Bearing Kit (All)	1	07-Up	25201	N.L.
ELECTRICAL COMPONENTS					
142A	Solenoid Assembly (GM)	1	07-Up	25420	N.L.
142A	Solenoid Assembly (Ford)	1	07-Up	25420A	N.L.
148A	Switch, IMS (Long) (GM)	1	07-Up	25410	N.L.
148A	Switch, IMS (Short) (Ford)	1	07-Up	25410A	N.L.
N.I.	Sensor, Output (OSS) 2 Wire (GM)	1	07-Up	25436	N.L.
N.I.	Sensor, Output (OSS) 3 Wire (Ford)	1	07-Up	25436A	N.L.
N.I.	Sensor, Input (ISS) 2 Wire (GM)	1	07-Up	25436	N.L.
N.I.	Sensor, Input (ISS) 3 Wire (Ford)	1	07-U	25436A	N.L.
PUMPS					
407D	Pump Assembly (Remote)	1	07-Up	25500	N.L.
PUMP COMPONENTS					
314C	Stator	1	07-Up	25520	N.L.
422D	Ring	2	07-Up	25538	N.L.
424D	Rotor (21.95mm)	1	07-Up	25532	N.L.
436D	Slide	1	07-Up	25534	N.L.
438D	Vanes (21.95mm)	7	07-Up	25533	N.L.
DRUMS & COMPONENTS					
440D	Piston, 1-2, 3-4 (Bonded)	1	07-Up	25964	7T4Z-7A262-A
558E	Hub, 4-5-6	1	07-Up	25570	N.L.
612F	Retainer, 4-5-6 (Bonded)	1	07-Up	25980	7T4Z-7H360-A
614F	Spring, Return (4-5-6)	1	07-Up	25970	24243887
618F	Drum, 4-5-6 with Input Shaft (3-5/ Reverse) (GM)	1	07-Up	25554	24223798
618F	Drum, 4-5-6 with Input Shaft (3-5/Reverse) (Ford)	1	07-Up	25554A	24223798
626F	Spring, Return (3-5 Reverse)	1	07-Up	25976	N.L.
628F	Piston, 3-5/ Reverse (Bonded)	1	07-Up	25966	7T4Z-7A262-B
630F	Reluctor, 3-5/Reverse Drum	1	07-Up	25847	N.L.
636F	Spring, Return (Low / Reverse)	1	07-Up	25977	N.L.
638F	Piston, Low/ Reverse (Bonded)	1	07-Up	25967	7T4Z-7D402-A
644F	Piston, 2-6 (Bonded)	1	07-Up	25962	7T4Z-7E005-A
PLANETS & COMPONENTS					
522E	Output (5 Gear)	1	07-Up	25584	N.L.
534E	Input (4 Gear)	1	07-Up	25582	N.L.
542E	Reaction (3 Gear)	1	07-Up	25580	N.L.
SUN GEARS					
530E	Sun Gear, Input (41T)	1	07-Up	25612	N.L.
ONE WAY CLUTCHES					
446D	Diode (GM)	1	07-Up	25642	N.L.
446D	Diode (Ford)	1	07-Up	25642A	N.L.
SHELLS & SUPPORTS					
516E	Shell, Output	1	07-Up	25624	N.L.
544E	Sun Gear Shell, Reaction (34T)	1	07-Up	25620	N.L.
VALVE BODIES & GOVERNORS					
146A	Valve Body (GM)	1	07-Up	25740	N.L.
146A	Valve Body (Ford)	1	07-Up	25740A	N.L.

ILL.		Qty.	Year	Part #	Ref. #
DIFFERENTIALS					
129A	Differential (GM)	1	07-Up	25715	N.L.
129A	Differential (Ford)	1	07-Up	25715A	N.L.
212B	Idler Gear w/ Pinion (21T)	1	07-Up	25714	N.L.
CHAINS AND SPROCKETS					
304C	Chain (Pump Drive) (42 Links)	1	07-Up	25700	N.L.
N.I.	Chain w/ Sprockets (Pump Drive)	1	07-Up	25700K	N.L.
306C	Sprocket, Drive (37T)	1	07-Up	25805	N.L.
406D	Sprocket, Driven	1	07-Up	25806	N.L.
CASES/HOUSINGS & COMPONENTS					
100A	Bell Housing (GM)	1	07-Up	25750	N.L.
100A	Bell Housing (Ford)	1	07-Up	25750A	N.L.
138A	Case (GM)	1	07-Up	25760	N.L.
138A	Case (Ford)	1	07-Up	25760A	N.L.
222B	Cover, Side (Valve Body)	1	07-Up	25766	N.L.
650F	Cover, End	1	07-Up	25759	24241083
TECHNICAL MANUALS					
N.I.	GM	1	07-Up	25400	N.L.
N.I.	Ford	1	07-Up	25400A	N.L.

Notes

TOLEDO TRANS-KIT · SEAL AFTERMARKET PRODUCTS · your source for engineered solutions · BRYCO · ProSELECT · RoadMaster

PRODUCT ANNOUNCEMENT

6T40 6T45 6T50 (Generation 1) 2008-Up

Seal Aftermarket Products now has the Overhaul Kit for the 6T40 6T45 6T50 Generation 1 transmissions series covering 2008-Up. **Please call your Sales Representative for pricing and availability**

Innovative Engineered Solutions

- Contains Seals for Auxiliary Fluid Pump



Vehicle Coverage

Various GM 1.4L - 3.0L vehicles including:

Buick
- ► Encore 2013
- ► Verano 2012-13

Chevrolet
- ►Cruze 2009-12 [4Cyl 1.4L 1.6L & 2.5L]
- ►Terrain 2009-12 [4Cyl 2.4L]
- ►Malibu 2008-12 [4Cyl 2.4L & 2.5L]

Pontiac
- ►G6 2009-10

Rebuild Kits

(Covers Only Generation 1 Transmissions)

Available Now

46002 - Overhaul Kit 6T40 6T45 6T50 2008-Up
46002P - Overhaul Kit 6T40 6T45 6T50 (With Pistons) 2008-Up

Available with 5 day lead-time

46004 - Master L/ Steels Kit 6T40 6T45 6T50 2008-Up
46004P - Master L/ Steels Kit 6T40 6T45 6T50 (With Pistons) 2008-Up
46006 - Master W/ Steels Kit 6T40 6T45 6T50 2008-Up
46006P - Master W/ Steels Kit 6T40 6T45 6T50 (With Pistons) 2008-Up



Notifications

What is Generation 1 & 2: It is a design change that GM made to 6T40/45/50 transmissions. It can be identified on the TEHCM *(shown in two locations).* A Generation 1 transmission will have a numerical code (1, 2, 3). Generation 2 will have a alphabetic code (A, B, C)

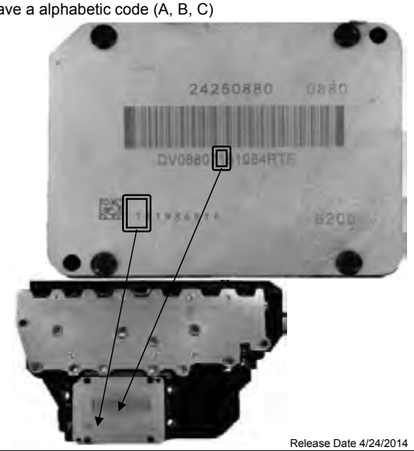

Release Date 4/24/2014

Sales Policy: All shipments are FCA Pembroke Park. Price and Availability subject to change
B00013 © 2014 Seal Aftermarket Products LLC. ALL RIGHTS RESERVED. Possession of price list does not constitute offer to sell
Disclaimer - All information has been checked for accuracy, however no liability can be assumed for errors and omissions

Seal Aftermarket Products LLC · 2315 SW 32nd Avenue · Pembroke Park FL 33023 · [P] (800) 582-2760 · [F] 954-364-2401 · www.sealaftermarketproducts.com

ILL.		Qty.	Year	Part #	Ref. #
MASTER OVERHAUL KITS (WITH STEELS)					
N.I.	2ML70	1	08-Up	174006	N.L.
MASTER OVERHAUL KITS (LESS STEELS)					
N.I.	2ML70	1	08-Up	174004	N.L.
OVERHAUL KITS (WITH RINGS AND SEALS)					
N.I.	2ML70	1	08-Up	174002	N.L.
BONDED PISTONS					
N.I.	Piston Kit	1	08-Up	174960A	N.L.
N.I.	Piston, 1-3 (Bonded)	1	08-Up	174964	N.L.
N.I.	Piston, 4th (Bonded)	1	08-Up	174960	N.L.
N.I.	Piston, Low 1-2 (Bonded)	1	08-Up	174967	N.L.
N.I.	Retainer, 1-3 (Bonded)	1	08-Up	174984	N.L.
N.I.	Retainer, 2-3-4 (Bonded)	1	08-Up	174985	N.L.
GASKETS & O-RINGS					
N.I.	Gasket, Pan	1	08-Up	174300	29544375
N.I.	Gasket, Bell Housing	1	08-Up	174310	29544401
N.I.	Gasket, Case to Rear Case	1	08-Up	174304	29544388
N.I.	Gasket, Extension Housing (2wd)	1	08-Up	174305	29544371
N.I.	Seal, Cable Housing	2	08-Up	174319	19168300
N.I.	Gasket, Auxiliary Pump	1	08-Up	174323	29543727
N.I.	Gasket, Park Pawl Cover	1	08-Up	174306	29543587
METAL CLAD SEALS					
N.I.	Front (Bell Housing)	1	08-Up	174070	24237531
N.I.	Manual Lever	1	08-Up	44072	24235861
N.I.	Extension Housing	1	08-Up	174074	24233898
SEALING RINGS & KITS					
N.I.	Sealing Ring Kit	1	08-Up	174175	N.L.
N.I.	Sealing Ring, Pump Slide	1	08-Up	174176	N.L.
FRICTION PLATES					
N.I.	1, 3	4	08-Up	174108	N.L.
N.I.	4th	2	08-Up	174100	N.L.
N.I.	2, 3, 4	4	08-Up	174106	N.L.
N.I.	Low 1-2	4	08-Up	174114	N.L.
STEEL PLATES					
N.I.	1, 3	4	08-Up	174128	N.L.
N.I.	4th	2	08-Up	174120	N.L.
N.I.	2, 3, 4	4	08-Up	174126	N.L.
N.I.	Low 1-2	4	08-Up	174134	N.L.
PRESSURE PLATES					
N.I.	1, 3	2	08-Up	174148	N.L.
N.I.	4th	3	08-Up	174140	N.L.
N.I.	2, 3, 4	2	08-Up	174146	N.L.
N.I.	Low 1-2	3	08-Up	174154	N.L.
FILTERS					
N.I.	Filter, Main	1	08-Up	174010	N.L.
N.I.	Filter, Auxiliary Pump	1	08-Up	174010D	N.L.
N.I.	Filter, Solenoid Plate (Screen/Gasket)	1	08-Up	174016	19168278
FILTER KITS					
N.I.	Filter Kit includes 2 Filters & Seals. Does not include the pan gasket.	1	08-Up	174011	N.L.
BUSHINGS					
N.I.	Bushing Kit	1	08-Up	174030	N.L.
N.I.	Bell Housing	1	08-Up	174034	N.L.
N.I.	Pump Cover	1	08-Up	174036	N.L.
N.I.	Center Sun Gear	1	08-Up	174040	N.L.
N.I.	1-3 Drum	1	08-Up	174048	N.L.

ILL.		Qty.	Year	Part #	Ref. #
BUSHINGS (Cont.)					
N.I.	Main Shaft	1	08-Up	174047	N.L.
N.I.	Front Sun Shaft	1	08-Up	174041	N.L.
N.I.	Rear Sun Shaft	1	08-Up	174041	N.L.
N.I.	2-3-4 Drum	1	08-Up	174046	N.L.
N.I.	Output	1	08-Up	174047	N.L.
N.I.	Output Support	1	08-Up	174065	N.L.
N.I.	Extension Housing (2wd)	1	08-Up	174066	N.L.
THRUST WASHERS/BEARINGS					
WASHERS					
N.I.	Rear Ring Gear to Planet	1	08-Up	174254	N.L.
BEARINGS					
N.I.	Pump to Input	1	08-Up	174211	N.L.
N.I.	Input to Front Planet	1	08-Up	174238	N.L.
N.I.	Center Planet	1	08-Up	174217	N.L.
N.I.	1-3 Drum	1	08-Up	174232	N.L.
N.I.	2-3-4 Hub Front	1	08-Up	174220	N.L.
N.I.	2-3-4 Hub Rear	1	08-Up	174220	N.L.
N.I.	2-3-4 Drum	1	08-Up	174214	N.L.
ELECTRICAL COMPONENTS					
N.I.	Cable, Hi Voltage	6	08-Up	174439	N.L.
N.I.	Harness, Internal	1	08-Up	174445	N.L.
N.I.	Module, TCM	1	08-Up	174443C	N.L.
N.I.	Motor Generator 1	1	08-Up	174456A	N.L.
N.I.	Motor Generator 2	1	08-Up	174456B	N.L.
N.I.	Sensor, Input Speed (ISS)	1	08-Up	174438	N.L.
N.I.	Sensor, Output Speed (OSS)	1	08-Up	174436	N.L.
N.I.	Sleeve, Case Connector	1	08-Up	95444	6L2Z-7G276AA
N.I.	Solenoids	1	08-Up	174420	N.L.
N.I.	Switch, Internal Mode	1	08-Up	174410	N.L.
PUMPS					
N.I.	Pump Assembly (Bell Housing)	1	08-Up	174750	N.L.
N.I.	Pump Assembly (Auxiliary)	1	08-Up	174508	N.L.
N.I.	Pump Cover (Main)	1	08-Up	174520	N.L.
PUMP COMPONENTS					
N.I.	Pump Rotor Kit (Includes Rotor, Vanes, Slide Guide & Spring)	1	08-Up	104531	N.L.
N.I.	Pump Rotor	1	08-Up	104532	N.L.
N.I.	Pump Vanes	13	08-Up	104533	N.L.
N.I.	Pump Rings	2	08-Up	104538	N.L.
N.I.	Pump Slide	1	08-Up	104534	N.L.
N.I.	Pump Guide	1	08-Up	104539	N.L.
N.I.	Pump Slide Spring	1	08-Up	104536	N.L.
DRUMS & COMPONENTS					
N.I.	Drum, 1-3 Clutch	1	08-Up	174554	N.L.
N.I.	Drum, 2-3-4 Clutch	1	08-Up	174552	N.L.
N.I.	Hub, 2-3-4 Clutch	1	08-Up	174572	N.L.
N.I.	Piston, 1-3 (Bonded)	1	08-Up	174964	N.L.
N.I.	Piston, 4th (Bonded)	1	08-Up	174960	N.L.
N.I.	Piston, Low 1-2 (Bonded)	1	08-Up	174967	N.L.
N.I.	Retainer, 1-3 (Bonded)	1	08-Up	174984	N.L.
N.I.	Retainer, 2-3-4 (Bonded)	1	08-Up	174985	N.L.
PLANETS & COMPONENTS					
N.I.	Planet, Front (5 Pinion)	1	08-Up	174582	N.L.
N.I.	Planet, Center (1-2-3) (5 Pinion)	1	08-Up	174580	N.L.
N.I.	Planet, Rear (2-3-4) (4 Pinion, 33T Gear)	1	08-Up	174584	N.L.
N.I.	Ring Gear, Front	1	08-Up	174592	N.L.
N.I.	Ring Gear, Center (1-2-3)	1	08-Up	174590	N.L.
N.I.	Ring Gear, Rear (2-3-4)	1	08-Up	174594	N.L.

ILL.		Qty.	Year	Part #	Ref. #
SUN GEARS					
N.I.	Center (1-2-3) 44 TOOTH	1	08-Up	174610	N.L.
N.I.	Rear (2-3-4) 39 TOOTH	1	08-Up	174614	N.L.
N.I.	Front	1	08-Up	174612	N.L.
SHELLS & SUPPORTS					
N.I.	Support, 1-3 Drum	1	08-Up	174630	N.L.
N.I.	Support, 2-3-4 Drum	1	08-Up	174632	N.L.
SHAFTS					
N.I.	Input w/ Hub	1	08-Up	174670	N.L.
N.I.	Main (18.5" Long)	1	08-Up	174672	N.L.
N.I.	Front Sun Gear	1	08-Up	174673	N.L.
N.I.	Rear Sun Gear	1	08-Up	174674	N.L.
N.I.	Output (4.725" Long)	1	08-Up	174678	N.L.
VALVE BODIES & GOVERNORS					
N.I.	Valve Body (Main)	1	08-Up	174740	N.L.
CASES/HOUSINGS & COMPONENTS					
N.I.	Bell Housing (Pump)	1	08-Up	174750	N.L.
N.I.	Case (Main)	1	08-Up	174760	N.L.
N.I.	Extension Housing, Low 1-2	1	08-Up	174770A	N.L.
N.I.	Extension Housing, 2wd	1	08-Up	174770	N.L.
N.I.	Pan (13 Bolt)	1	08-Up	174765	N.L.
N.I.	Cover, PTO	1	08-Up	174766	N.L.
MISCELLANEOUS COMPONENTS					
N.I.	Cushion, 1-3	1	08-Up	174854	N.L.
N.I.	Cushion, 2-3-4	1	08-Up	174852	N.L.
N.I.	Cushion, 4th	1	08-Up	174851	N.L.
N.I.	Cushion, Low 1-2	1	08-Up	174857	N.L.
N.I.	Pads, Rear Ring Gear	1	08-Up	174594-1	N.L.
N.I.	Piston, 2-3-4	1	08-Up	174965	N.L.
N.I.	Return Spring, 1-3	1	08-Up	174974	N.L.
N.I.	Return Spring, 2-3-4	1	08-Up	174975	N.L.
N.I.	Return Spring, 4th	1	08-Up	174970	N.L.
N.I.	Return Spring, Low 1-2	1	08-Up	174977	N.L.

Notes

Notes

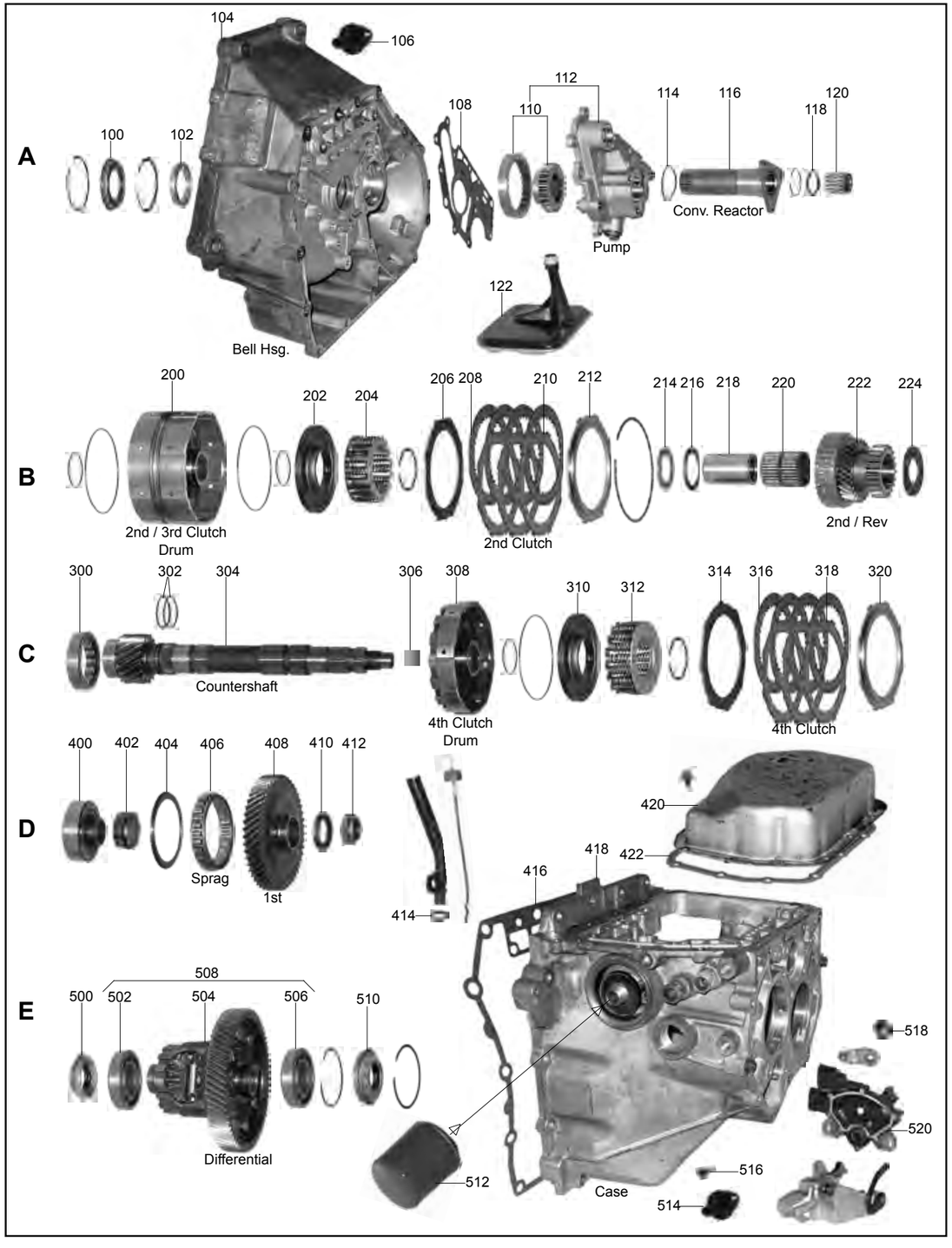
A
B
C
D
E
104
106
100
102
108
112
110
114
116
118
120
Bell Hsg.
Pump
Conv. Reactor
122
200
202
204
206 208
210
212
214 216
218
220
222
224
2nd / 3rd Clutch Drum
2nd Clutch
2nd / Rev
300
302
304
306
308
310
312
314
316
318
320
Countershaft
4th Clutch Drum
4th Clutch
400
402
404
406
408
410
412
Sprag
1st
420
422
418
416
414
508
500
502
504
506
510
Differential
518
520
512
516
514
Case

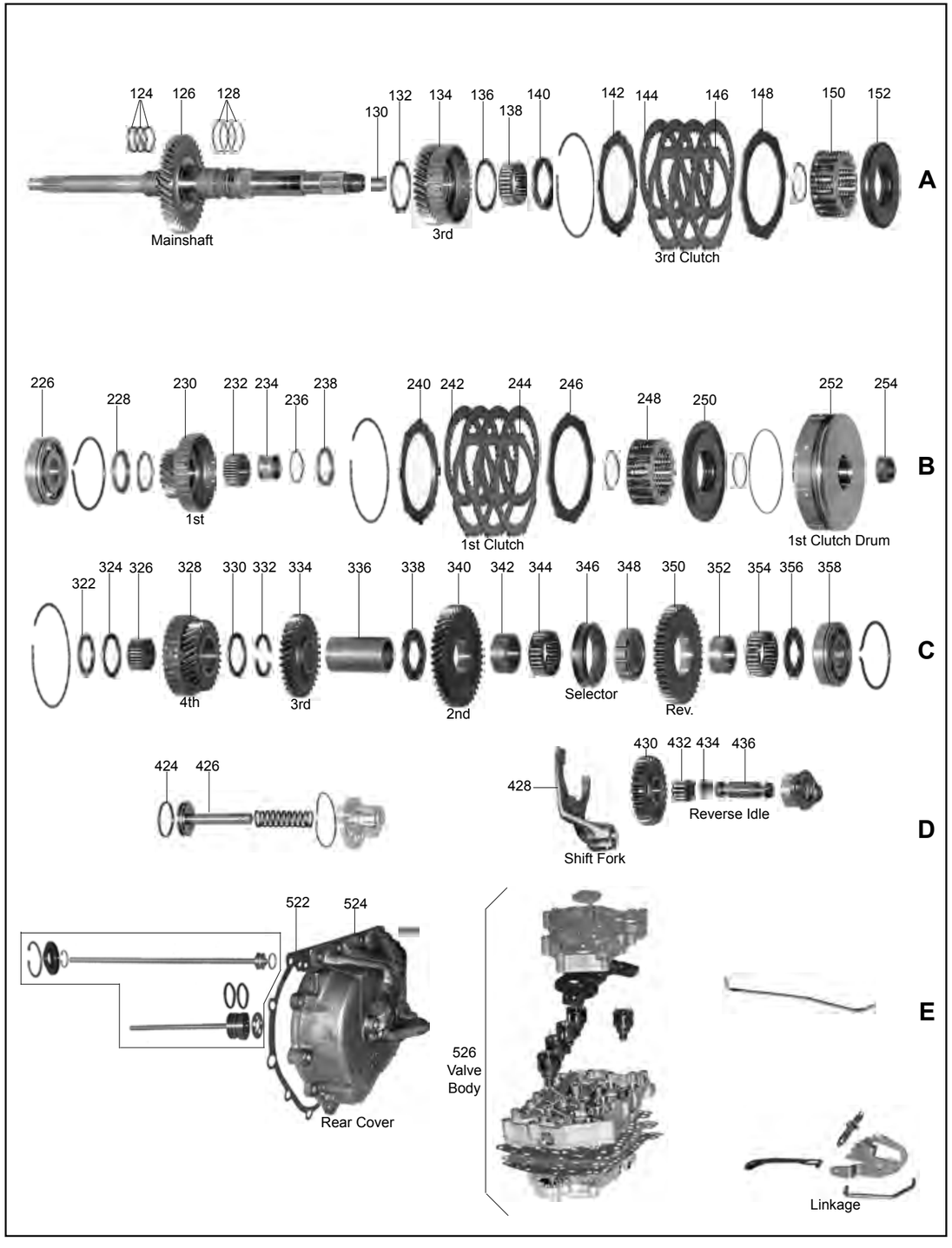
A
B
C
D
E
124
126
128
130
132
134
136
138
140
142
144
146
148
150
152
Mainshaft
3rd
3rd Clutch
226
228
230
232
234
236
238
240
242
244
246
248
250
252
254
1st
1st Clutch
1st Clutch Drum
322
324
326
328
330
332
334
336
338
340
342
344
346
348
350
352
354
356
358
4th
3rd
2nd
Selector
Rev.
424
426
428
430
432
434
436
Shift Fork
Reverse Idle
522
524
Rear Cover
526
Valve
Body
Linkage

ILL.		Qty.	Year	Part #	Ref. #
MASTER OVERHAUL KITS (WITH STEELS)					
N.I.	Saturn Taat (w/ Pistons)	1	91-02	10006APF	N.L.
OVERHAUL KITS (WITH RINGS AND SEALS)					
N.I.	Saturn Taat (w/o Pistons)	1	91-02	10002AF	N.L.
BONDED PISTONS					
N.I.	Piston Kit	1	91-02	10960A	N.L.
152A	Piston, For 2nd, 3rd & 4th Clutch Drums (Bonded)	1	91-02	10962A	21001582
250B	Piston, 1st Clutch Drum (Bonded)	1	91-02	10964A	21001581
GASKETS & O-RINGS					
114A	O-Ring, Converter Hub to Reactor Shaft	1	91-02	10381AA	N.L.
118A	O-Ring, Converter Reactor Shaft to Bell Housing	1	91-02	10381A	N.L.
416D	Gasket, Case to Converter Housing	1	91-02	10318A	21002265
422D	Gasket, Top Pan	1	91-96	10302A	21001683
422D	Gasket, Top Pan (Bonded Rubber) (not included in kits)	1	97-02	10302B	21003202
522E	Gasket, Rear/ Side Cover	1	91-02	10304A	21001684
N.I.	Gasket Kit, Valve Body	1	91-02	10320K	N.L.
METAL CLAD SEALS					
100A	Front	1	91-02	10070A	21002741
500E	Left Axle (Case Side)	1	91-02	10077B	21002670
510E	Right Axle (Bell Housing Side)	1	91-02	10076B	21002669
N.I.	Rear Cover to Pinion Shaft Pilot	1	91-02	10074A	21001662
FRICTION PLATES					
206B	Apply Plate (1 Sided Friction, External Teeth)	4	91-02	10141A	21002567
208B	All (1 Sided, 36 Internal Teeth)	15	91-02	10100A	21002276
210B	All (1 Sided, 8 External Teeth)	11-12	91-02	10120A	21002277
FILTERS					
122A	Sump (Internal)	1	91-02	10010A	21002496
512E	Spin-On (External)	1	91-02	10013A	21002303
N.I.	Screen, Large Thimble Flushing	1	91-02	10015	21002096
N.I.	Screen, Small Thimble Solenoid (w/ Brass Rim)	1	91-02	10017	21002151
ELECTRICAL COMPONENTS					
514E	Sensor, Input & Output (TSS / VSS)	2	91-02	10436	21020719
520E	MLPS (w/ Grooves)	1	91-94	10410A	21020129
520E	MLPS (w/ Flats)	1	95-02	10410B	21022303
N.I.	Switch, Solenoid Connector Plate	1	91-02	10414	21002828
N.I.	Solenoid, Black or Blue Top	5	91-92	10421A	21002248
N.I.	Solenoid, White Top	5	93-02	10421AC	21003289
N.I.	Wiring Harness, External Repair Solenoid	1	91-02	10446K	21024415
DRUMS & COMPONENTS					
152A	Piston, For 2nd, 3rd & 4th Clutch Drums (Bonded)	1	91-02	10962A	21001582
250B	Piston, 1st Clutch Drum (Bonded)	1	91-02	10964A	21001581
426D	Piston, Servo (1st Design) Up to VIN# NZ205624	1	91-92	10912A	N.L.
426D	Piston, Servo (2nd Design) w/ VIN# NZ205625 & Up	1	92-96	10912AA	N.L.
ONE WAY CLUTCHES					
400D	Inner Race	1	91-02	10662A	N.L.
406D	Input Sprag	1	91-02	10652A	21003314
SHAFTS					
126A	Main Shaft, 40T 4th Gear	1	91-02	10672A	N.L.
126A	Main Shaft, 42T 4th Gear	1	91-02	10672B	21002104
304C	Countershaft, Output Shaft 15 Teeth	1	91-02	10676A	N.L.
304C	Countershaft, Output Shaft 16 Teeth	1	91-02	10676B	N.L.
304C	Countershaft, Output Shaft 17 Teeth	1	91-02	10676C	N.L.
VALVE BODIES & GOVERNORS					
526E	Valve Body (Large Valve in Bottom)	1	91-92	10740-2	N.L.
526E	Valve Body (4 Holes in Bottom)	1	93-02	10740-1	N.L.

ILL.		Qty.	Year	Part #	Ref. #
DIFFERENTIALS					
508E	Differential Assembly w/ 62T Ring Gear	1	91-94	10715A	N.L.
508E	Differential Assembly w/ 65T Ring Gear	1	95-02	10715B	N.L.
TECHNICAL MANUALS					
N.I.	Tech Manual	1	91-02	10400A	SATURN TAAT

Notes

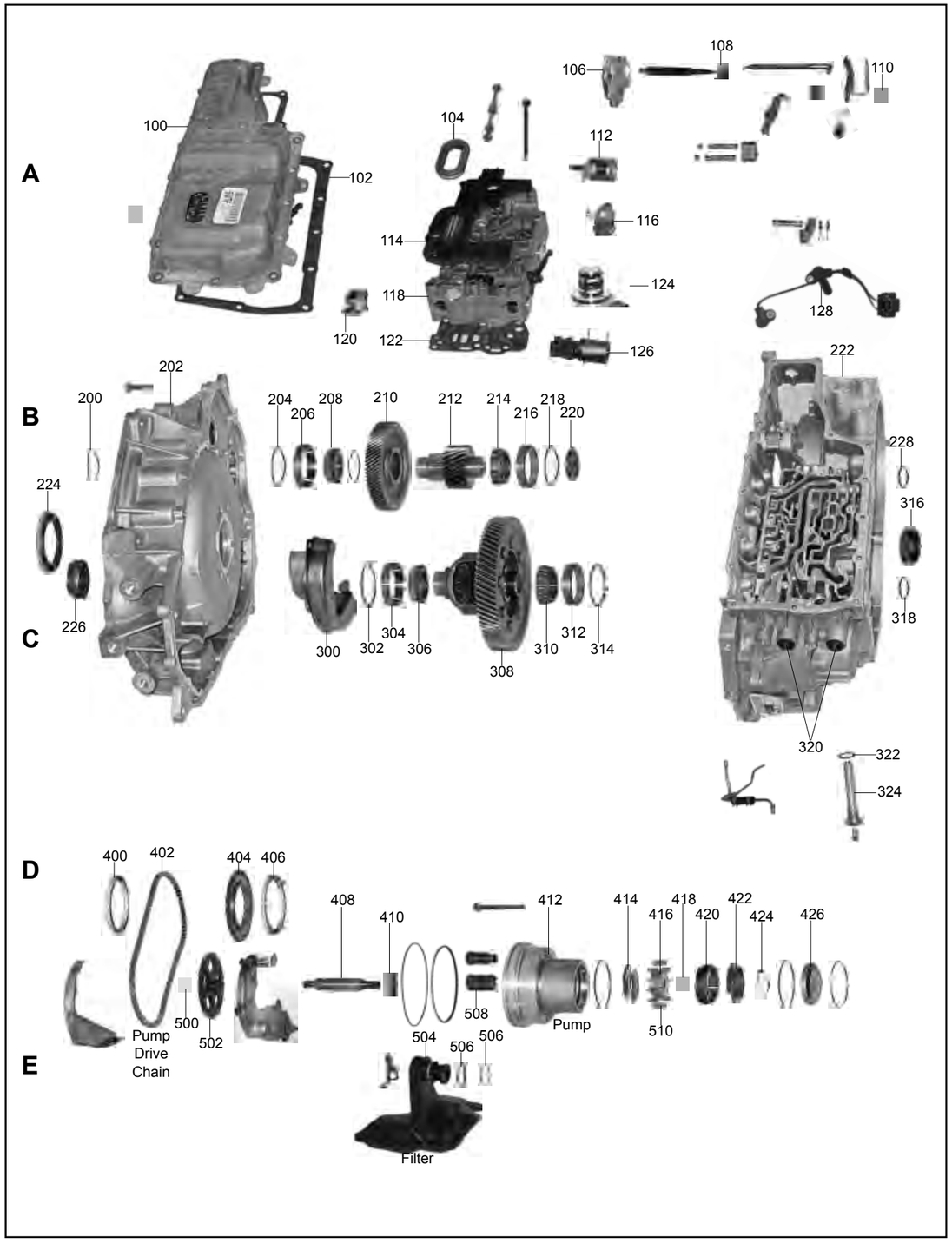
A
100
102
104
106
108
110
112
114
116
118
120
122
124
126
128
B
200
202
204
206
208
210
212
214
216
218
220
222
224
226
228
316
318
C
300
302
304
306
308
310
312
314
320
322
324
D
400
402
404
406
408
410
412
414
416
418
420
422
424
426
Pump
Drive
Chain
500
502
504
506
508
510
Pump
Filter
E

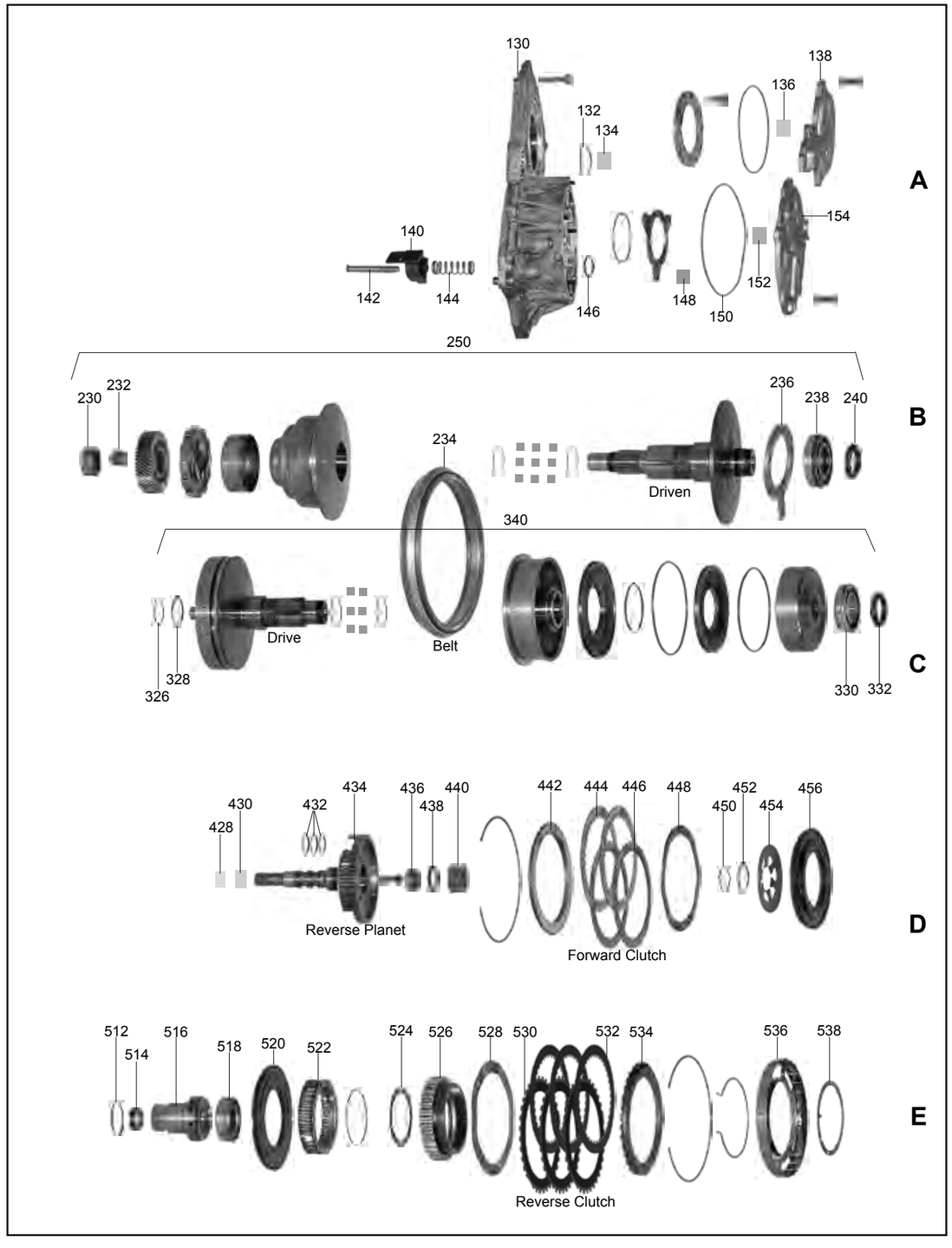
A
130
132
134
136
138
140
142
144
146
148
150
152
154
250
B
230
232
234
236
238
240
Driven
340
C
Drive
Belt
326
328
330
332
D
428
430
432
434
436
438
440
442
444
446
448
450
452
454
456
Reverse Planet
Forward Clutch
E
512
514
516
518
520
522
524
526
528
530
532
534
536
538
Reverse Clutch

ILL.		Qty.	Year	Part #	Ref. #
MASTER OVERHAUL KITS (WITH STEELS)					
N.I.	w/ Pistons	1	02-05	205006J	N.L.
OVERHAUL KITS (WITH RINGS AND SEALS)					
N.I.	w/o Bonded Pistons	1	02-05	205002J	N.L.
BONDED PISTONS					
N.I.	Piston Kit	1	02-05	205960K	N.L.
456D	Piston, Forward (Bonded)	1	02-05	205964J	24221565
520E	Piston, Reverse (Bonded)	1	02-05	205966J	24224346
GASKETS & O-RINGS					
102A	Valve Body Cover	1	02-05	205302J	24220201
122A	Valve Body Gasket Kit	1	02-05	205320JK	N.L.
METAL CLAD SEALS					
224B	Converter	1	02-05	205070J	24211127
226B	Axle (Bell) (Fwd)	1	02-05	205077J	24211013
226B	Transfer Case (Right Axle)	1	02-05	205077JA	12569986
316C	Axle (Case)	1	02-05	205077J	24211013
N.I.	Linkage Shaft	1	02-05	84072A	8644709
N.I.	Cooler Line	2	02-05	14378	N.L.
SEALING RINGS & KITS					
N.I.	Sealing Ring Kit	1	02-05	205175J	N.L.
FRICTION PLATES					
444D	Forward (One Sided Internal Teeth)	2	02-05	205108J	24214069
446D	Forward (One Sided External Teeth)	2	02-05	205128J	24214070
530E	Reverse (One Sided External Teeth)	3	02-05	205130J	24214073
532E	Reverse (One Sided Internal Teeth)	3	02-05	205110J	24223185
PRESSURE PLATES					
442D	Forward	2	02-05	205148J	N.L.
534E	Reverse	3	02-05	205150J	N.L.
FILTERS					
504E	Filter	1	02-05	205010J	24226576
BUSHINGS					
N.I.	Bushing Kit	1	02-05	205030J	N.L.
N.I.	Converter Hub	1	02-05	205031J	N.L.
N.I.	Stator	1	02-05	205036J	N.L.
N.I.	Pump Body	1	02-05	205034J	N.L.
THRUST WASHERS/BEARINGS					
WASHERS					
N.I.	Washer Kit	1	02-05	205200J	N.L.
400D	Pump Drive Front/Rear	2	02-05	205205J	N.L.
438D	Planet to Sun Gear	1	02-05	205247J	N.L.
524E	Ring Gear Front	1	02-05	205253J	N.L.
538E	Ring Gear Rear	1	02-05	205255J	N.L.
BEARINGS					
N.I.	Input Bearing	1	02-05	205201J	N.L.
310C	Differential Bearing	2	02-05	205289J	N.L.
N.I.	Input Needle Bearing	1	02-05	205229J	N.L.
N.I.	Driven Needle Bearing	1	02-05	205232J	N.L.
N.I.	Transfer Gear Bearing	2	02-05	205238J	N.L.
N.I.	Drive Pulley Bearing	1	02-05	205238J	N.L.
N.I.	Driven Pulley Bearing	1	02-05	205241J	N.L.
ELECTRICAL COMPONENTS					
106A	Switch, MLPS	1	02-05	205410J	N.L.
112A	Solenoid, Neutral / TCC (PWM)	1	02-05	20525JB	N.L.
114A	Harness, Connector Plate	1	02-05	205445J	N.L.

ILL.		Qty.	Year	Part #	Ref. #
ELECTRICAL COMPONENTS (Cont.)					
116A	Solenoid, Neutral / TCC (On-Off)	1	02-05	20525JA	N.L.
120A	Switch, Pressure	1	02-05	205411J	N.L.
124A	Solenoid, Ratio Control	1	02-05	205435J	N.L.
126A	Solenoid, EPC	1	02-05	205431J	N.L.
128A	Sensor, Input / Output Speed	1	02-05	205438J	N.L.
PUMPS					
412D	Pump Assembly (Remote)	1	02-05	205500J	N.L.
PUMP COMPONENTS					
416D	Pump Rotor	1	02-05	205532J	N.L.
420D	Pump Slide (Cylinder)	1	02-05	205534J	N.L.
510E	Pump Vanes	12	02-05	205533J	N.L.
DRUMS & COMPONENTS					
448D	Cushion, Forward	1	02-05	205853J	N.L.
456D	Piston, Forward (Bonded)	1	02-05	205964J	24221565
520E	Piston, Reverse (Bonded)	1	02-05	205966J	24224346
528E	Cushion, Reverse	1	02-05	205854J	N.L.
PLANETS & COMPONENTS					
434D	Planet, Input w/ Shaft	1	02-05	205582J	N.L.
526E	Ring Gear, Input Planet	1	02-05	205592J	N.L.
SUN GEARS					
N.I.	Forward	1	02-05	205612J	N.L.
VALVE BODIES & GOVERNORS					
118A	Valve Body (Main)	1	02-05	205740J	N.L.
DIFFERENTIALS					
308C	2wd	1	02-05	205715J	N.L.
308C	4wd	1	02-05	205715JA	N.L.
CHAINS AND SPROCKETS					
402D	Chain, Pump	1	02-05	205703J	N.L.
404D	Sprocket, Pump Drive (48T)	1	02-05	205805J	N.L.
502E	Sprocket, Pump Driven (53T)	1	02-05	205806J	N.L.
CASES/HOUSINGS & COMPONENTS					
100A	Cover, Valve Body	1	02-05	205766J	N.L.
130A	Case (Rear)	1	02-05	205770J	N.L.
138A	Cover, Drive End	1	02-05	205756J	N.L.
154A	Cover, Driven End	1	02-05	205757J	N.L.
202B	Bell Housing (2wd)	1	02-05	205750J	N.L.
202B	Bell Housing (4wd)	1	02-05	205750JA	N.L.
222B	Case (Main)	1	02-05	205760J	N.L.
CVT COMPONENTS					
234B	Belt, Push	1	02-05	205700J	901033
240B	Nut, Driven Pulley	1	02-05	205796J	N.L.
250B	Driven Pulley Assembly	1	02-05	205712J	N.L.
332C	Nut, Drive Pulley	1	02-05	205795J	N.L.
340C	Drive Pulley Assembly	1	02-05	205711J	N.L.
N.I.	CVT Kit, w/ Pulleys & Belt	1	02-05	205710JK	15297659
MISCELLANEOUS COMPONENTS					
454D	Return Spring, Forward	1	02-05	205974J	N.L.
522E	Return Spring, Reverse	1	02-05	205976J	N.L.
536E	Reluctor	1	02-05	205477J	N.L.
N.I.	Gear, Transfer (with Pinion)	1	02-05	205705J	N.L.
N.I.	Gear, Output	1	02-05	205706J	N.L.
TECHNICAL MANUALS					
N.I.	Transmission Guide (GM)	1	02-05	205400J	TMG-VT25E

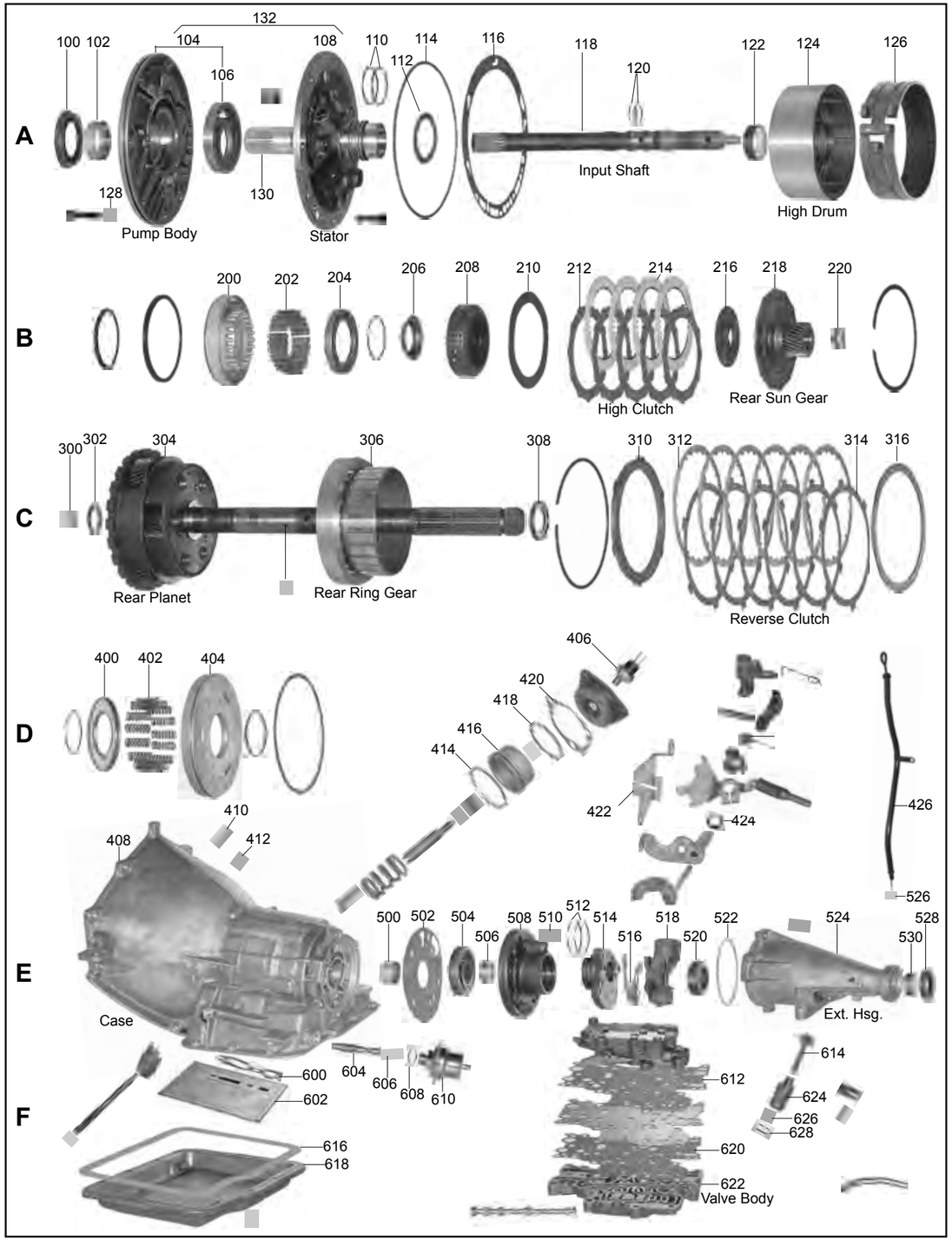

ILL.		Qty.	Year	Part #	Ref. #
MASTER OVERHAUL KITS (WITH STEELS)					
N.I.	Aluminum Powerglide	1	62-73	103006	114006
MASTER OVERHAUL KITS (LESS STEELS)					
N.I.	Aluminum Powerglide	1	62-73	103004	114004
OVERHAUL KITS (WITH RINGS AND SEALS)					
N.I.	Aluminum Powerglide	1	62-73	103002	114002
GASKETS & O-RINGS					
114A	O-Ring, Front Pump	1	62-73	103311	3789013
116A	Gasket, Front Pump	1	62-73	103310	3789022
418D	O-Ring, Low Servo	1	62-73	103359	28821-OR
420D	Gasket, Low Servo Cover	1	62-73	103307	3789086
516E	Gasket, Governor Cover (w/o Rear Pump)	1	62-73	103306	N.L.
522E	Lathe Cut Seal, Extension Housing to Case	1	62-73	103348	N.L.
600F	Gasket, Filter	1	62-73	103326	3795900
608F	Gasket, Modulator	1	62-73	103327	6257218
612F	Gasket, Upper Valve Body (w/ Rear Pump)	1	62-66	103320A	N.L.
612F	Gasket, Upper Valve Body (No Rear Pump)	1	67-73	103320B	N.L.
616F	Gasket, Bottom Pan	1	62-73	103300	3789148
620F	Gasket, Lower Valve Body (w/ Rear Pump)	1	62-66	103321B	N.L.
620F	Gasket, Lower Valve Body (No Rear Pump)	1	67-73	103320B	N.L.
METAL CLAD SEALS					
100A	Front	1	62-73	44070	8641300
424D	Linkage	1	62-73	103072	3789137
528E	Rear	1	62-73	44074	D5AZ-7052A
SEALING RINGS & KITS					
N.I.	Ring Kit	1	62-73	103175	N.L.
FRICTION PLATES					
214B	High (.098")	4-5	62-73	103106	3779904
214B	High (.098") (High Performance)	4-5	62-73	103106HP	N.L.
214B	High (.062") (High Performance)	4-6	62-73	103106AHP	N.L.
312C	Reverse	5-6	62-73	44114	8641512
312C	Reverse (High Performance)	5-6	62-73	44114HP	8651513
STEEL PLATES					
212B	High (.070")	3-6	62-73	103126	1366440
212B	High (.070") (Kolene)	3-6	62-73	103126K	S019701K
212B	High (.060") (Kolene)	3-6	62-73	103126BK	S019701AK
314C	Reverse (.070")	4-6	62-73	103130	6256553
314C	Reverse (.070") (Kolene)	4-6	62-73	103130K	6256553
FRICTION & STEEL KITS					
N.I.	Friction & Steel Kit, High (.060" Hi-Perf)	1	62-73	103106APPK	19755-HP
N.I.	Steel Module	1	62-73	103139	N.L.
FILTERS					
602F	Aluminum Powerglide	1	62-73	103010	6263005
FILTER KITS					
N.I.	Aluminum Powerglide	1	62-73	103011	114011
BANDS					
126A	Low	1	62-73	103022	3883918
126A	Low (High Performance)	1	62-73	103022HP	28314-K
BUSHINGS					
N.I.	Bushing Kit	1	62-73	103030	N.L.
102A	Pump Body	1	62-73	44034	29511860
122A	Clutch Drum	1	62-73	54034A	8628913
220B	Sun Gear	1	62-73	103052	8436
300C	Output Shaft Pilot	1	62-73	44062	3789034
500E	Case	1	62-73	103064	3789009

ILL.		Qty.	Year	Part #	Ref. #
BUSHINGS (Cont.)					
506E	Rear Pump Body & Governor	2	62-73	103034B	3789877
530E	Extension Housing	1	62-73	44066	3717682
THRUST WASHERS/BEARINGS					
WASHERS					
112A	Washer, Direct Drum .078"	1	62-73	103229B	28406C
302C	Washer, Rear Sun Gear	1	62-73	103247	38208
VALVE BODY RECALIBRATION KITS					
N.I.	Reprogramming Kit™ , Automatic or Stick; Full Race/Street 1963-73 (Transgo®)	1	62-73	T103171	PG-2S
PUMPS					
132A	Pump (Complete)	1	62-73	103500	N.L.
PUMP COMPONENTS					
106A	Pump Gears	1	62-73	103530	28201
DRUMS & COMPONENTS					
208B	Clutch Hub, Direct	1	62-73	103575	28304
MISCELLANEOUS COMPONENTS					
610F	Modulator, Adjustable	1	62-73	103160	352635

Notes

Notes

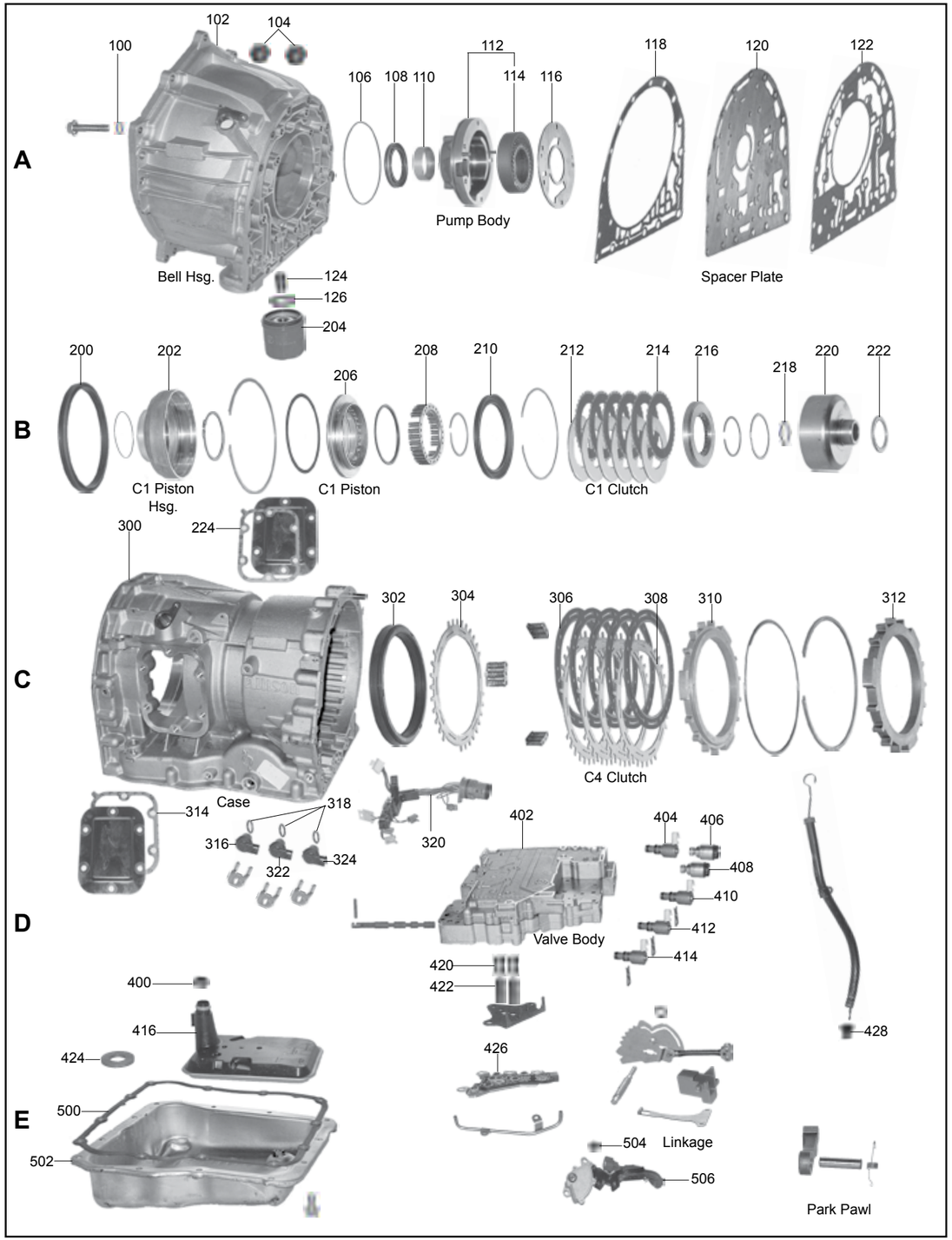
A
100
102
104
106
108
110
112
114
116
118
120
122
Bell Hsg.
Pump Body
Spacer Plate
124
126
204
B
200
202
206
208
210
212
214
216
218
220
222
C1 Piston Hsg.
C1 Piston
C1 Clutch
300
224
C
302
304
306
308
310
312
Case
C4 Clutch
314
316
318
320
322
324
402
404
406
408
410
412
414
D
Valve Body
420
422
428
400
416
424
426
E
500
502
504
Linkage
506
Park Pawl

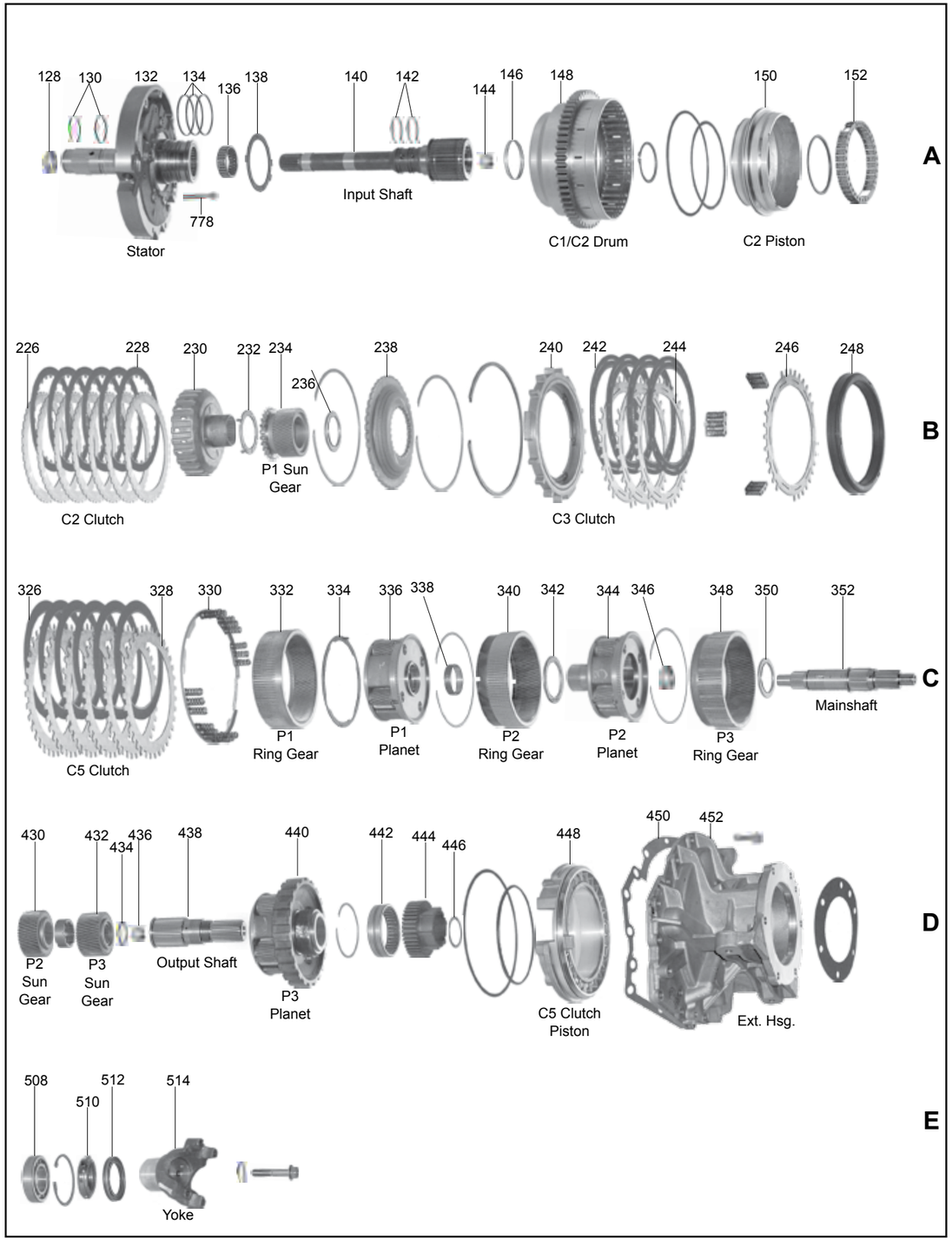
A
128
130
132
134
136
138
140
142
144
146
148
150
152
Stator
778
Input Shaft
C1/C2 Drum
C2 Piston
B
226
228
230
232
234
236
238
240
242
244
246
248
C2 Clutch
P1 Sun Gear
C3 Clutch
C
326
328
330
332
334
336
338
340
342
344
346
348
350
352
C5 Clutch
P1 Ring Gear
P1 Planet
P2 Ring Gear
P2 Planet
P3 Ring Gear
Mainshaft
D
430
432
434
436
438
440
442
444
446
448
450
452
P2 Sun Gear
P3 Sun Gear
Output Shaft
P3 Planet
C5 Clutch Piston
Ext. Hsg.
E
508
510
512
514
Yoke

ILL.		Qty.	Year	Part #	Ref. #
MASTER OVERHAUL KITS (WITH STEELS)					
N.I.	w/ Pistons (except Gen4)	1	00-05	116006A	N.L.
N.I.	w/ Pistons (Gen4)	1	06-Up	116006B	N.L.
MASTER OVERHAUL KITS (LESS STEELS)					
N.I.	w/ Pistons (except Gen4)	1	00-05	116004A	N.L.
N.I.	w/ Pistons (Gen4)	1	06-Up	116004B	N.L.
OVERHAUL KITS (WITH RINGS AND SEALS)					
N.I.	w/o Bonded Pistons (except Gen4)	1	00-05	116002	29536920
N.I.	w/ Pistons (except Gen4)	1	00-05	116002A	29541007
N.I.	w/o Bonded Pistons (Gen4)	1	06-Up	116002D	N.L.
N.I.	w/ Pistons (Gen4)	1	06-Up	116002B	N.L.
BONDED PISTONS					
N.I.	Piston Kit	1	00-05	116960K	N.L.
200B	C2 Balance Piston (Bonded)	1	00-05	116960B	29536105
210B	C1 Balance Piston (Bonded)	1	00-05	116964B	29536203
210B	C1 Balance Piston (Bonded) (Gen4)	1	06-Up	116964BA	29542815
248B	C3 Clutch Piston (Bonded)	1	00-Up	116962	29537394
302C	C4 Clutch Piston (Bonded)	1	00-Up	116962	29537394
GASKETS & O-RINGS					
100A	Seal, Bell Bolt	1	00-Up	116309	N.L.
106A	O-Ring, Pump	1	00-Up	116311	N.L.
118A	Gasket, Bell Housing Plate (Front) (2nd Design, Retros 00-Up)	1	00-Up	116318B	29540130
118A	Gasket, Bell Housing Plate (Rear)	1	00-Up	116318A	29536478
224C	Gasket, PTO Cover	2	00-Up	111319	N.L.
450D	Gasket, Extension Housing	1	00-Up	116305	29536941
500E	Gasket, Pan (Bonded)	1	00-Up	116300	29536526
N.I.	Gasket, Cooler Manifold	1	00-Up	116323	29531189
METAL CLAD SEALS					
108A	Front	1	00-Up	116070A	29540309
504E	Manual Lever	1	00-Up	44072	23010610
512E	Rear	1	00-Up	116074	29536379
SEALING RINGS & KITS					
N.I.	Sealing Ring Kit	1	00-Up	116175	N.L.
FRICTION PLATES					
214B	C1 Clutch - External Teeth	6	00-Up	116108	29530312
214B	C1 Clutch (High Performance)	1	00-Up	116108HPK	N.L.
228B	C2 Clutch	6	00-Up	116100	29530313
228B	C2 Clutch (High Performance)	1	00-Up	116100HPK	N.L.
242B	C3 Clutch	4	00-Up	116104	29531049
242B	C3 Clutch (High Performance)	1	00-Up	116106HPK	N.L.
306C	C4 Clutch	5	00-Up	116104	29531049
306C	C4 Clutch (High Performance)	1	00-Up	116104HPK	N.L.
326C	C5 Clutch	6	00-Up	116114	29537393
N.I.	Z-Pak, C2	1	00-Up	116100K	N.L.
STEEL PLATES					
212B	C1 Clutch - Internal Teeth	6	00-Up	116128	29530314
226B	C2 Clutch	7	00-Up	116120	29530315
244B	C3 Clutch (.098")	3	00-Up	116124	29531048
308C	C4 Clutch (.098")	4	00-Up	116124	29531048
328C	C5 Clutch (.078")	AR	00-Up	116134A	29536481
328C	C5 Clutch (.098")	6	00-Up	116134	29536482
328C	C5 Clutch (.118")	AR	00-Up	116134B	29536483
PRESSURE PLATES					
216B	C1 Backing Plate (5.94mm Thick)	AR	00-Up	116148A	N.L.
216B	C1 Backing Plate (6.38mm Thick)	AR	00-Up	116148B	N.L.
216B	C1 Backing Plate (6.83mm Thick)	AR	00-Up	116148C	N.L.
238B	P1 Sun Gear Flange	1	00-Up	116140	N.L.
240B	C3 Backing Plate (w/ Thrust Pads)	AR	00-Up	116146	N.L.

ILL.		Qty.	Year	Part #	Ref. #
PRESSURE PLATES (Cont.)					
246B	C3 Apply Plate (.125")	1	00-Up	1161124A	2953637
246B	C3 Apply Spring Sets	3	00-Up	116147-2	N.L.
304C	C4 Apply Plate (.125")	1	00-Up	116124A	N.L.
304C	C4 Apply Spring Sets	3	00-Up	116147-2	N.L.
310C	C4 Backing Plate	1	00-Up	116147	N.L.
312C	C5 Backing Plate	1	00-Up	116154	N.L.
N.I.	C3 Backing Plate Thrust Pads	3	00-Up	116146-1B	N.L.
N.I.	C3 Backing Plate Thrust Pad Rivets	6	00-Up	116146-1A	N.L.
FILTERS					
204A	Spin-On External	1	00-Up	116013	29539579
416D	Shallow Pan (1st Design)	1	00-E06	116010	29537965
416D	Shallow Pan (2nd Design)	1	L06-Up	116010B	29542833
416D	Deep Pan (1st Design)	1	00-09	116010A	29537966
416D	Deep Pan (2nd Design)	1	10-Up	116010C	29542824
FILTER KITS					
N.I.	Filter Kit, Shallow Pan (1st Design)	1	00-E06	116011	N.L.
N.I.	Filter Kit, Deep Pan (1st Design)	1	00-09	116011A	N.L.
N.I.	Filter Kit, Shallow Pan (2nd Design)	1	L06-Up	116011B	N.L.
N.I.	Filter Kit, Deep Pan (2nd Design)	1	10-Up	116011C	N.L.
BUSHINGS					
N.I.	Bushing Kit	1	00-Up	116030	N.L.
110A	Front Pump Body (2nd Design)	1	00-Up	116034	29536703
128A	Ground Sleeve (Stator) Front	1	00-Up	116036	N.L.
144A	Input Shaft	1	00-Up	116047	N.L.
146A	Rotating (Input) Hub	1	00-Up	116048	N.L.
338C	P1 Planet Carrier	1	00-Up	116042	N.L.
346C	P2 Planet Carrier	1	00-Up	116053	N.L.
436D	Output Shaft	1	00-Up	116047	N.L.
THRUST WASHERS/BEARINGS					
WASHERS					
138A	Washer, Pump Support (Peek Design)	1	00-Up	116211	N.L.
232B	Washer, C2 Hub to P1 Sun Gear (1.6mm) (1st Design)	1	2000	116220	N.L.
232B	Washer, C2 Hub to P1 Sun Gear (2.6mm) (3rd Design)	1	01-Up	116220B	N.L.
334C	Washer, C1-C2 Ring Gear (Peek Design)	1	00-Up	116217	29536862
BEARINGS					
218B	Bearing, Turbine Shaft to C1 Hub (44mm OD) (1st Design)	1	00-04	116232	N.L.
218B	Bearing, Turbine Shaft to C1 Hub (54mm OD) (2nd Design)	1	05-Up	116232A	N.L.
222B	Bearing, C1 Hub to C2 Hub	1	00-Up	116235	N.L.
236B	Bearing, P1 Sun Gear to P1 Planet	1	00-Up	116216	N.L.
342C	Bearing, P1 Planet to P2 Planet	1	00-Up	116244	N.L.
350C	Bearing, P2 Planet to P2 Sun Gear (52mm ID) (1st Design)	1	00-06	116216	N.L.
350C	Bearing, P2 Planet to P2 Sun Gear (48mm ID) (2nd Design)	1	07-Up	116238	N.L.
434D	Bearing, P3 Sun Gear to P3 Planet (44mm OD) (1st Design)	1	00-02	116232	N.L.
434D	Bearing, P3 Sun Gear to P3 Planet (54mm OD) (2nd Design)	1	02-Up	116232A	N.L.
ELECTRICAL COMPONENTS					
320C	Wiring Harness Assembly (Internal) 6 Solenoids	1	01-E03	116446	29541371
320C	Wiring Harness Assembly (Internal) 7 Solenoids	1	L03-05	116446A	29539792
320C	Wiring Harness Assembly (Internal Mode) (Gen4 except GM)	1	06-Up	116446B	29543334
320C	Wiring Harness Assembly (Internal Mode) (Gen4 GM Applications)	1	06-Up	116446C	29543336
320C	Repair Kit, Park/Neutral Switch Harness	1	00-05	74446K	15305887
322C	Sensor, Input, Output & Turbine	3	00-Up	116438	29536408
404D	Solenoid, 'F' Trim (PWM)	1	00-05	74418E	24227747
406D	Solenoid, Trim 'A'	1	00-05	116418	29533074
406D	Solenoid, 'PCS1" (Gen4)	1	06-Up	116418B	29541895
408D	Solenoid, Trim 'B'	1	00-05	116418A	29533075
408D	Solenoid, 'PCS2" (Gen4)	1	06-Up	116418C	29541896
412D	Solenoid, Shift ('C', 'D' & 'E')	3	00-Up	74418EA	24209121
412D	Solenoid, Modulated Pressure Control ('G')	1	L03-Up	74418EA	24209121
414D	Solenoid, 'PCS' (TCC) (Gen4)	1	06-Up	116425	29541898

ILL.		Qty.	Year	Part #	Ref. #
ELECTRICAL COMPONENTS (Cont.)					
426E	Switch Assembly, Pressure Manifold (4 Switch) (Replaces the 6 Switch)	1	00-Up	116411A	29542585
506E	Switch, Neutral Start/Backup (MLPS) 1 Connector	1	L03-05	116410A	29541852
506E	Switch, Internal Mode Switch (MLPS) 1 Connector (Gen4)	1	06-Up	116410B	29542692
506E	Switch, Neutral Start/Backup (MLPS) 2 Connector	1	01-E03	116410	29540479
N.I.	Wiring Harness (External Repair) (Universal 20 Pin) (GM)	1	00-Up	74445U	N.L.
VALVE BODY RECALIBRATION KITS					
N.I.	Shift Kit®, Standard, HD and Racing (5 Speeds) (Transgo®)	1	01-05	T116165	ALLISON
N.I.	Shift Kit-Jr® (6 Speeds - Gen4) (Transgo®)	1	06-Up	T116167	ALLISON JR
PUMPS					
112A	Pump Body Kit (Complete)	1	00-Up	116510K	29545809
112A	Pump Body w/Gears (31T Design)	1	00-05	116510A	N.L.
112A	Pump Body w/Gears (22T Design) (Gen4)	1	06-Up	116510C	N.L.
132A	Front Support (Stator) Assembly (1st Design)	1	00-E04	116520AK	N.L.
132A	Front Support (Stator) Assembly (2nd Design)	1	L04-05	116520BK	N.L.
132A	Front Support (Stator) Assembly (3rd Design) (Gen4)	1	06-Up	116520CK	N.L.
N.I.	Ground Sleeve	1	00-Up	116529	N.L.
PUMP COMPONENTS					
114A	Pump Gears (31T Design)	1	00-05	116530A	N.L.
114A	Pump Gears (22T Design) (Gen4)	1	06-Up	116530C	N.L.
116A	Pump Plate (2nd Design)	1	00-05	116544	29541149
116A	Pump Plate (3rd Design) (Gen4)	1	06-Up	116544C	N.L.
120A	Separator Plate, Bell Housing to Case (2nd Design)	1	00-Up	116764	29538445
N.I.	Lock-Up Boost Kit	1	00-03	116507K	N.L.
N.I.	Lock-Up Boost Kit	1	04-07	116507AK	N.L.
DRUMS & COMPONENTS					
148A	Rotating Drum (C1-C2) (w/ PTO Gear)	1	00-05	116554	N.L.
148A	Rotating Drum (C1-C2) (w/ Sensor Gear)	1	00-05	116554A	N.L.
148A	Rotating Drum (C1-C2) (w/ PTO Gear) (Gen4)	1	06-Up	116554B	N.L.
148A	Rotating Drum (C1-C2) (w/ Sensor Gear) (Gen4)	1	06-Up	116554C	N.L.
150A	C2 Clutch Piston (2nd Design)	1	00-05	116960	N.L.
150A	C2 Clutch Piston (Gen4)	1	06-Up	116960A	N.L.
152A	C2 Clutch Return Spring	1	00-05	116971	N.L.
152A	C2 Clutch Return Spring (Gen4)	1	06-Up	116971A	N.L.
200B	C2 Balance Piston (Bonded)	1	00-05	116960B	29536105
202B	C1 Piston Housing	1	00-05	116955	N.L.
202B	C1 Piston Housing (Gen4)	1	06-Up	116955A	N.L.
206B	C1 Clutch Piston	1	00-05	116964A	N.L.
206B	C1 Clutch Piston (Full Springs) (Gen4)	1	06-Up	116964AA	N.L.
208B	C1 Clutch Return Spring	1	00-05	116974	N.L.
208B	C1 Clutch Return Spring (Full Springs) (Gen4)	1	06-Up	116974A	N.L.
210B	C1 Balance Piston (Bonded)	1	00-05	116964B	29536203
210B	C1 Balance Piston (Bonded) (Gen4)	1	06-Up	116964BA	29542815
220B	Hub, C1 Clutch (w/ T1 Bearing Step)	1	00-04	116574	N.L.
220B	Hub, C1 Clutch (w/o T1 Bearing Step)	1	05-Up	116574A	N.L.
230B	Hub, C2 Clutch (Narrow Washer Slots)	1	00-03	116572	29536962
230B	Hub, C2 Clutch (Wide Washer Slots)	1	03-Up	116572A	N.L.
248B	C3 Clutch Piston (Bonded)	1	00-Up	116962	29537394
302C	C4 Clutch Piston (Bonded)	1	00-Up	116962	29537394
330D	C5 Clutch Return Spring	1	00-Up	116977	N.L.
448D	C5 Clutch Piston (w/ Parking Brake Design)	1	00-Up	116967	N.L.
448D	C5 Clutch Piston (w/o Parking Brake Design)	1	00-Up	116967A	N.L.
PLANETS & COMPONENTS					
P1 PLANET					
332C	Ring Gear (2.150" Wide) (except Hi Helix)	1	00-05	116590	N.L.
332C	Ring Gear (2.100" Wide) (except Hi Helix)	1	06-Up	116590B	N.L.
336C	Planet w/ Gears (except Hi Helix)	1	00-Up	116580	29531096
336C	Planet w/ Gears (Hi Helix)	1	06-Up	116580B	N.L.
336C	Planet Housing Only (except Hi Helix)	1	00-Up	116580-5	N.L.

ILL.		Qty.	Year	Part #	Ref. #
P2 PLANET					
340C	Ring Gear (w/ .080" Snap Ring Groove) (except Hi Helix)	1	00-05	116592	29536863
340C	Ring Gear (w/ .130" Snap Ring Groove) (except Hi Helix)	1	06-Up	116592A	N.L.
340C	Ring Gear (w/ .130" Snap Ring Groove) (Hi Helix)	1	06-Up	116592B	N.L.
344C	Planet w/ Gears (52mm ID T5 Bearing Design) (except Hi Helix)	1	00-06	116582	29536971
344C	Planet w/ Gears (48mm ID T5 Bearing Design) (except Hi Helix)	1	07-Up	116582A	N.L.
344C	Planet w/ Gears (48mm ID T5 Bearing Design) (Hi Helix)	1	06-Up	116582B	N.L.
344C	Planet Housing Only (52mm ID T5 Bearing Design) (except Hi Helix)	1	00-06	116582-5	N.L.
344C	Planet Housing Only (48mm ID T5 Bearing Design) (except Hi Helix)	1	07-Up	116582A-5	N.L.
P3 PLANET					
348C	Ring Gear (w/ .080" Snap Ring Groove) (except Hi Helix)	1	00-05	116594	29536863
348C	Ring Gear (w/ .130" Snap Ring Groove) (except Hi Helix)	1	06-Up	116594A	N.L.
348C	Ring Gear (w/ .130" Snap Ring Groove) (Hi Helix)	1	06-Up	116594B	N.L.
440D	Planet w/ Gears (1000 w/ 44mm OD T6 Brg) (w/ Park Gear) (except Hi Helix)	1	00-02	116584	29540500
440D	Planet w/ Gears (1000 w/ 54mm OD T6 Brg) (w/ Park Gear) (except Hi Helix)	1	02-Up	116584A	N.L.
440D	Planet w/ Gears (1000 w/ 54mm OD T6 Brg) (Hi Helix)	1	06-Up	116584B	N.L.
440D	Planet w/ Gears (2000 w/ 44mm OD T6 Brg) (w/o Park Gear)	1	00-02	116584E	N.L.
440D	Planet w/ Gears (2000 w/ 54mm OD T6 Brg) (w/o Park Gear)	1	02-Up	1161584	N.L.
440D	Planet w/ Gears (2400 w/ 44mm OD T6 Brg) (w/ Park Gear)	1	00-02	116584J	N.L.
440D	Planet w/ Gears (2400 w/ 54mm OD T6 Brg) (w/ Park Gear)	1	02-Up	116584K	N.L.
SUN GEARS					
P1 SUN GEAR					
234B	Sun Gear (w/o Washer Recess) (1st Design)	1	00-01	116610	29537433
234B	Sun Gear (w/ Washer Recess) (3rd Design)	1	01-Up	116610B	N.L.
238B	Sun Gear Flange (P1)	1	00-Up	116140	N.L.
P2 SUN GEAR					
430D	Sun Gear (41mm Wide w/ Raised Spacer Surface) (1st Design)	1	00-04	116612	29536960
430D	Sun Gear (38mm Wide w/ Flat Spacer Surface) (2nd Design)	1	04-06	116612A	N.L.
430D	Sun Gear (w/ Reduced 52mm Bearing ID) (except Hi Helix)	1	07-Up	116612AA	N.L.
430D	Sun Gear (w/ Reduced 52mm Bearing ID) (Hi Helix)	1	06-Up	116612B	N.L.
P3 SUN GEAR					
432D	Sun Gear (1000 Large Diameter w/ 44mm Bearing Bore)	1	00-02	116614	29539543
432D	Sun Gear (1000 Large Diameter w/ 54mm Bearing Bore) (except Hi Helix)	1	02-Up	116614A	N.L.
432D	Sun Gear (1000 Large Diameter w/ 54mm Bearing Bore) (Hi Helix)	1	06-Up	116614B	N.L.
432D	Sun Gear (2000 Small Diameter w/ 44mm Bearing Bore)	1	00-02	116614E	N.L.
432D	Sun Gear (2000 Small Diameter w/ 54mm Bearing Bore)	1	02-Up	116614	N.L.
SHAFTS					
N.I.	Ground Sleeve	1	00-Up	116529	N.L.
140A	Input Shaft (w/ 44mm Dia T1 Bearing)	1	00-04	116670	29536214
140A	Input Shaft (w/ 55mm Dia T1 Bearing)	1	05-Up	116670A	N.L.
352C	Main Shaft	1	00-Up	116674	29536984
438D	Output Shaft (2wd)	1	00-Up	116678	29536845
438D	Output Shaft (4wd)	1	00-Up	116678A	29531252
VALVE BODIES & GOVERNORS					
402D	Valve Body	1	00-03	116740-1	N.L.
402D	Valve Body	1	04-05	116740-2	N.L.
402D	Valve Body (Gen4)	1	06-Up	116740-3	N.L.
CASES/HOUSINGS & COMPONENTS					
102A	Bell Housing, Direct Mount (GM Pickups)	1	00-Up	116750	29540491
452D	Extension Housing (4wd) (1000 GM Models)	1	00-Up	116770	29544804
502E	Pan, Shallow	1	00-Up	116765	N.L.
502E	Pan, Deep	1	00-Up	116765A	N.L.

ILL.		Qty.	Year	Part #	Ref. #
MISCELLANEOUS COMPONENTS					
N.I.	Case Fitting, Push-In (.750" 16UNF Thread)	2	00-03	116996	29540501
N.I.	Case Fitting, Push-In (.875" 14UNF Thread)	2	03-Up	116996A	N.L.
N.I.	Clip, Cooler Line	1	03-Up	116496	N.L.
424D	Magnet, External Spin On Filter	1	00-Up	116839	N.L.
N.I.	Nut, Output	1	00-Up	116798	N.L.
MISCELLANEOUS COMPONENTS (Cont.)					
N.I.	Socket, Output Nut	1	00-Up	T-1000	N.L.
TECHNICAL MANUALS					
N.I.	Tech Manual	1	00-Up	116400	ALLISON 1000

Notes

RWD
5 SPEED
ALLISON

1000, 2000, 2400

Notes

GM

ILL.		Qty.	Year	Part #	Ref. #
MASTER OVERHAUL KITS (WITH STEELS)					
N.I.	AT540, All (except AT543 European)	1	70-Up	111006A	N.L.
N.I.	MT640, 643	1	72-Up	101006	N.L.
N.I.	MT650, 653	1	72-Up	101006A	N.L.
MASTER OVERHAUL KITS (LESS STEELS)					
N.I.	AT 540, All (except AT543 European)	1	70-Up	111004A	N.L.
N.I.	MT640, 643	1	72-Up	101004	N.L.
N.I.	MT650, 653	1	72-Up	101004A	N.L.
OVERHAUL KITS (WITH RINGS AND SEALS)					
N.I.	AT540, All (except AT543 European)	1	70-Up	111002	N.L.
N.I.	MT640, 643, 650, 653	1	72-Up	101002A	N.L.
GASKETS & O-RINGS					
N.I.	Gasket, Bottom Pan (Armstrong®) (All)	1	70-Up	111300A	29501160
N.I.	Gasket, Bottom Pan (Cork) (All)	1	70-Up	111300	29501160
N.I.	Gasket, Governor Cover (All)	1	70-Up	34306	23011670
N.I.	Gasket, Power Take Off Cover (All)	1	70-Up	111319	29501161
METAL CLAD SEALS					
N.I.	Front Pump (AT540)	1	70-Up	44070	8641300
N.I.	Extension Housing (AT540)	1	70-Up	121074	6778050
N.I.	Selector Shaft (All)	1	70-Up	44072	23010610
N.I.	Front Pump (3.335" OD) (MT640)	1	72-Up	101070	6837288
N.I.	Front Pump (3.380" OD) (Viton Shielded) (MT640)	1	72-Up	101070A	23045556
N.I.	Front Pump (3.881" OD) (Updated, Brown) (MT640)	1	72-Up	101070B	23016643
N.I.	Extension Housing (3.628" OD) (MT640)	1	72-Up	121074	6778050
N.I.	Extension Housing (4.751" OD) (MT640)	1	72-Up	101080	6773311
FRICTION PLATES					
N.I.	1st Range (AT540)	7	70-Up	111108	23042198
N.I.	2nd Range (AT540)	3	70-Up	111106	29537887
N.I.	3rd Range (AT540)	3	70-Up	111106	29537887
N.I.	4th Range (AT540)	5	70-Up	111104	23042197
N.I.	Forward (AT540)	5	70-Up	111104	23042197
N.I.	1st (MT640)	6	72-Up	111106	29537887
N.I.	2nd (MT640)	3-6	72-Up	101106	23042201
N.I.	3rd (MT640)	3-5	72-Up	101106	23042201
N.I.	4th (MT640)	4-5	72-Up	101108	23042200
N.I.	Forward (MT640)	5-6	72-Up	101108	23042200
N.I.	Low (50T) (except 654 Phase 1 & 2) (MT640)	6	72-Up	101106	23042201
N.I.	Low (71T) (654 Phase 1 & 2) (MT640)	7-8	72-Up	101106A	23042210
STEEL PLATES					
N.I.	1st Range (AT540)	7	70-Up	111128	6831705
N.I.	2nd Range (AT540)	3	70-Up	111126	29515399
N.I.	3rd Range (AT540)	3	70-Up	111126	29515399
N.I.	4th Range (AT540)	5	70-Up	34126A	29530330
N.I.	Forward (AT540)	5	70-Up	34126A	29530330
N.I.	Forward (Waved) (AT540)	1	70-Up	111129	29505875
N.I.	1st (MT640)	6	72-Up	101124	23016606
N.I.	2nd (MT640)	3-6	72-Up	101126	23016608
N.I.	3rd (MT640)	3-5	72-Up	101126	23016608
N.I.	4th (MT640)	4-5	72-Up	101128	23016610
N.I.	Forward (MT640)	5-6	72-Up	101128	23016610
N.I.	Low (8.825" ID) (except 654 Phase 1 & 2) (MT640)	6-7	72-Up	101126	23016608
FILTERS					
N.I.	(Metal Screen) (AT540)	1	70-Up	111010B	29502295
N.I.	(Treated Paper) (AT540)	1	70-Up	111010D	6438326
N.I.	Paper (Large Hole Grommet) (MT640)	1	72-Up	101010	29527373
N.I.	Paper (Small Hole Grommet) (MT640)	1	72-Up	101010B	N.L.

ILL.		Qty.	Year	Part #	Ref. #
FILTER KITS					
N.I.	Filter Kit (Metal Screen) (AT540)	1	70-Up	111011B	N.L.
N.I.	Filter Kit (Treated Paper) (AT540)	1	70-Up	111011D	N.L.
N.I.	Filter Kit, (Large Hole Grommet) (MT640)	1	72-Up	101011A	N.L.
N.I.	Filter Kit, (Small Hole Grommet) (MT640)	1	72-Up	101011B	N.L.
BUSHINGS					
N.I.	Bushing Kit (7 Bushings) AT540, Early 545	1	70-Up	111030	N.L.
N.I.	Bushing Kit (7 Bushings) Late 545	1	70-Up	111030A	N.L.
N.I.	Pump Body (Bronze) (AT540)	1	70-Up	111034B	68880917
N.I.	Bushing Kit (MT640)	1	72-Up	101030	N.L.
N.I.	Pump (2.443" OD) (MT640)	1	72-Up	101034	6881926
N.I.	Pump (2.530" OD) (MT640)	1	72-Up	101034A	29527101
N.I.	Pump (2.580" OD) (MT640)	1	72-Up	101034B	23046152
VALVE BODIES & GOVERNORS					
N.I.	Governor (Code # 461) Up to 2800 RPM Range (AT540)	1	70-Up	111680A	6885570
N.I.	Governor (Code # 462) 3000-3400 RPM Range (AT540)	1	70-Up	111680B	6885571
N.I.	Governor (Code # 460) 3600-3800 RPM Range (AT540)	1	70-Up	111680	6881466
MISCELLANEOUS COMPONENTS					
N.I.	Modulator (Small Can) (All)	1	70-Up	111160	29501199

Notes

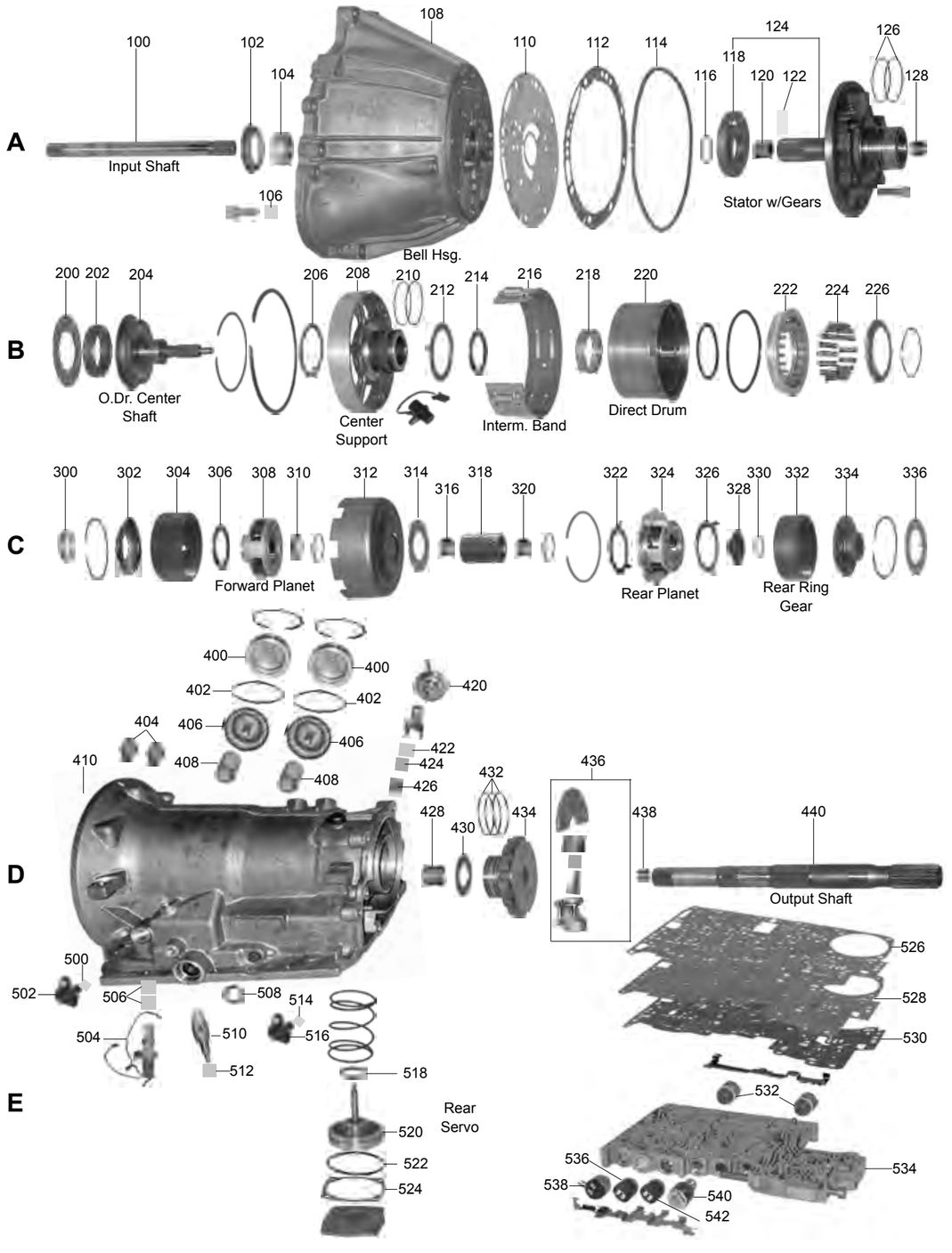
A
B
C
D
E
100
102
104
106
108
110
112
114
116
118
120
122
124
126
128
Input Shaft
Bell Hsg.
Stator w/Gears
200 202 204
206
208
210
212
214
216
218
220
222
224
226
O.Dr. Center Shaft
Center Support
Interm. Band
Direct Drum
300 302 304 306 308 310 312 314 316 318 320 322 324 326 328 330 332 334 336
Forward Planet
Rear Planet
Rear Ring Gear
400
402
404
406
408
410
420
422
424
426
428
430
432
434
436
438
440
Output Shaft
500
502
504
506
508
510
512
514
516
518
520
522
524
Rear Servo
526
528
530
532
534
536
538
540
542

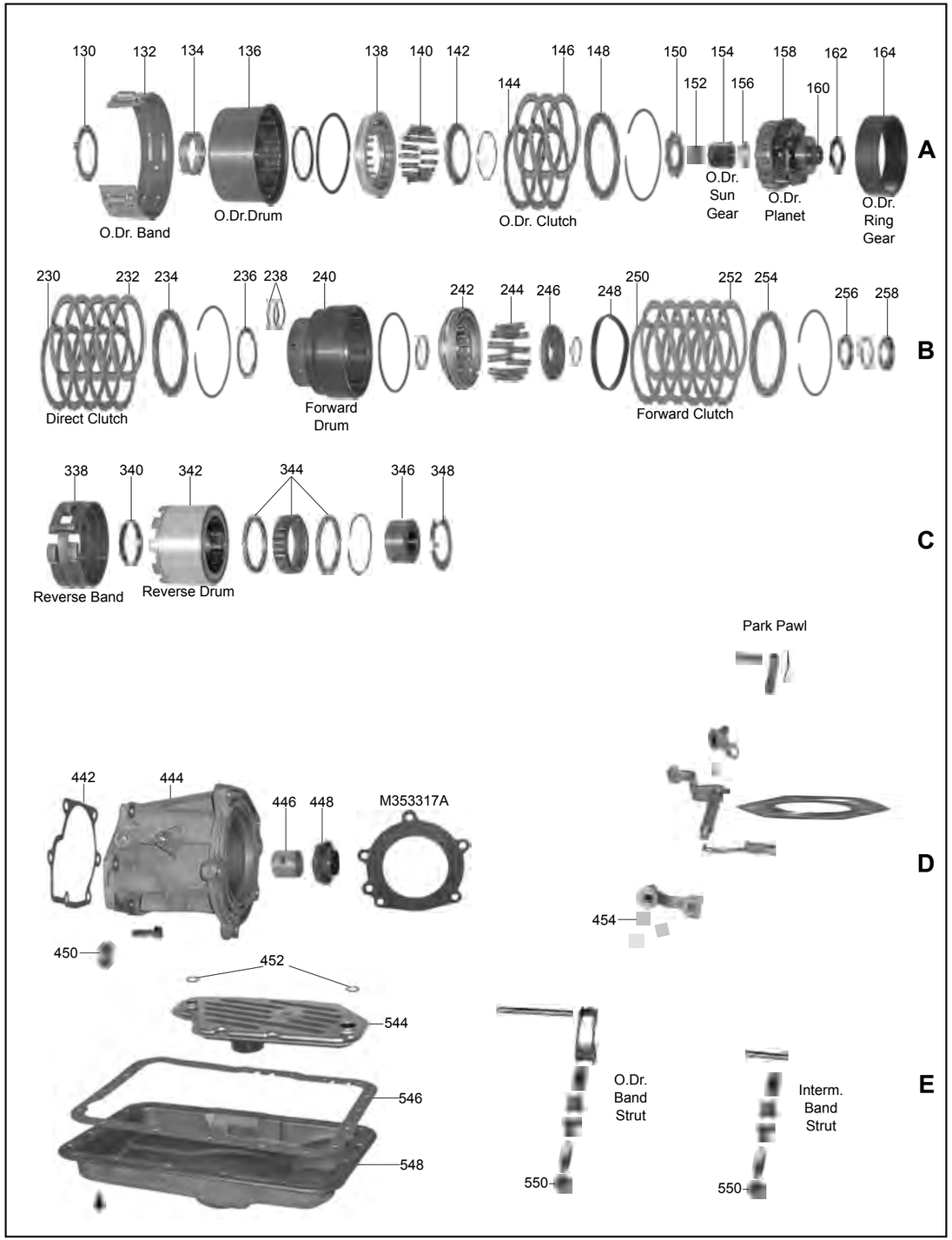
A
B
C
D
E
130 132 134 136 138 140 142 144 146 148 150 152 154 156 158 160 162 164
O.Dr. Band
O.Dr.Drum
O.Dr. Clutch
O.Dr. Sun Gear
O.Dr. Planet
O.Dr. Ring Gear
230 232 234 236 238 240 242 244 246 248 250 252 254 256 258
Direct Clutch
Forward Drum
Forward Clutch
338 340 342 344 346 348
Reverse Band
Reverse Drum
Park Pawl
442 444 446 448
M353317A
450
452
454
544
546
548
550
O.Dr. Band Strut
Interm. Band Strut

ILL.		Qty.	Year	Part #	Ref. #
DELUXE KITS (SUPER KITS WITH STEELS)					
N.I.	(2wd) 4R44E, 4R55E	1	95-96	56008HA	N.L.
N.I.	(2wd) 4R44E, 5R44E, 5R55E	1	97-Up	56008LA	N.L.
N.I.	(4wd) 4R44E, 4R55E	1	95-96	56008HB	N.L.
N.I.	(4wd) 4R44E, 5R44E, 5R55E	1	97-Up	56008LB	N.L.
MASTER OVERHAUL KITS (WITH STEELS)					
N.I.	4R44E, 4R55E	1	95-96	56006H	N.L.
N.I.	4R44E, 5R44E, 5R55E	1	97-Up	56006L	N.L.
MASTER OVERHAUL KITS (LESS STEELS)					
N.I.	4R44E, 4R55E	1	95-96	56004H	N.L.
N.I.	4R44E, 5R44E, 5R55E	1	97-Up	56004L	N.L.
OVERHAUL KITS (WITH RINGS AND SEALS)					
N.I.	4R44E, 4R55E	1	95-96	56002H	N.L.
N.I.	4R44E, 5R44E, 5R55E	1	97-Up	56002L	N.L.
GASKETS & O-RINGS					
112A	Gasket, Pump	1	95-Up	56310	F5TZ-7A136A
114A	O-Ring, Front Pump	1	95-Up	56311	D5ZZ-7A248A
402D	O-Ring, Intermediate & Overdrive Servo	2	95-Up	56362A	E6TZ-7D040A
442D	Gasket, Extension Housing	1	95-Up	56305	D4ZZ-7086B
452D	O-Ring, Filter (Small)	1	95-Up	56379A	E6TZ-7A469B
452D	O-Ring, Filter (Large)	1	95-Up	56379LA	E6TZ-7A469A
518E	O-Ring, Reverse Servo Seal (Small)	1	95-Up	56363A	E6TZ-7D040A
518E	O-Ring, Reverse Servo Seal (Large)	1	95-Up	56363C	D4ZZ-7423B
524E	Gasket, Reverse Servo Cover	1	95-Up	56307	D4ZZ-7L173A
526E	Gasket, Valve Body (Upper)	1	95-Up	56320H	F5TZ-7C155A
530E	Gasket, Valve Body (Lower)	1	95-Up	56321H	F5TZ-7D100B
546E	Gasket, Pan	1	95-Up	56300E	E5TZ-7A191A
N.I.	O-Ring, Pump Bolt	8	95-Up	56312	E804595-S200
METAL CLAD SEALS					
102A	Front (Deep Lip)	1	95-96	56070A	E5TZ-7A248A
102A	Front (Rubber Coated)	1	97-Up	56070B	F77Z-7A248AA
448D	Rear (w/o Boot)	1	95-Up	56074	D5ZZ-7052A
448D	Rear (w/ Boot)	1	95-Up	56074B	E2ZZ-7052A
508E	Linkage	1	95-Up	36072	C7AZ-7B498A
SEALING RINGS & KITS					
N.I.	Ring Kit	1	95-96	56175EK	N.L.
N.I.	Ring Kit	1	97-Up	56175LK	N.L.
122A	Front Stator (Scarf cut)	1	95-96	56178T	E5TZ-7L323A
122A	Front Stator (Solid)	1	97-Up	56178L	97GT-7L323AA
126A	Overdrive & Direct Drum (Teflon)	2-4	95-96	56179T	E5TZ-7D025A
126A	Overdrive & Direct Drum (Green Plastic)	1	97-Up	56179L	N.L.
238B	Forward (Metal)	2	95-96	56181	D4ZZ-7D019A
238B	Forward (Plastic)	2	97-Up	56181M	F77Z-M154CA
FRICTION PLATES					
146A	Overdrive	3	95-96	56100A	90GT-7B164BA
146A	Overdrive (w/ Directional Grooves)	2	97-Up	56100B	F7ZZ-7B164CA
232B	Direct	6	95-96	56106A	90DT-7B164BA
232B	Direct (w/ Directional Grooves)	5	97-Up	56106B	F7ZZ-7B164BA
252B	Forward	6	95-96	56108A	90DT-7B164AA
252B	Forward (w/ Directional Grooves)	6	97-Up	56108B	F7ZZ-7B164AA
STEEL PLATES					
144A	Overdrive	3	95-Up	56120B	F0TZ-7B442B
230B	Direct .065"	4-6	95-Up	56120B	F0TZ-7B442B
250B	Forward .065" (19T)	6	95-Up	56128C	F0TZ-7B442A
N.I.	Steel Module	1	95-96	56139G	N.L.
N.I.	Steel Module	1	97-Up	56139H	N.L.
N.I.	Direct .082"	4	97-Up	56120C	D4ZZ-7B442B

ILL.		Qty.	Year	Part #	Ref. #
PRESSURE PLATES					
148A	Direct & Overdrive .200" (20T)	2	95-Up	56140B	F0TZ-7B066B
254B	Forward .200" (19T)	1	95-Up	56148D	F0TZ-7B066A
FILTERS					
544E	4wd (Felt) (Metal & Plastic)	1	95-Up	56010G	XL2Z-7A098DA
544E	2wd (Felt) (Metal & Plastic)	1	95-Up	56010H	XL2Z-7A098CA
FILTER KITS					
N.I.	Filter Kit (2wd) (Felt)	1	95-Up	56011H	N.L.
N.I.	Filter Kit (4wd) (Felt)	1	95-Up	56011G	N.L.
BANDS					
216B	Intermediate & Overdrive	1-2	95-Up	56022E	74DT-7B034AA
216B	Intermediate & Overdrive (Hi-Energy)	1-2	95-Up	46022	1L4P-7D034AA
338C	Reverse	1	95-Up	56024	E3ZZ-7D095A
BUSHINGS					
N.I.	Bushing Kit	1	95-96	56030D	N.L.
N.I.	Bushing Kit	1	97-Up	56030F	N.L.
104A	Converter Housing (Babbitt)	1	95-Up	56034	D4TP-7A834AB
104A	Converter Housing (Bronze)	1	95-Up	56034B	D4TP-7A834AB
120A	Stator (Front) (w/ Grooves on ID & OD) (.750" Long)	1	95-Up	56036B	56000C-01
128A	Stator (Rear)	1	95-Up	56037	N.L.
134A	Direct/Reverse (Cast Iron) Drum	1	95-96	56046	N.L.
134A	Direct/Reverse (Steel) Drum	2	95-96	56046B	90DT-7D046A
316C	Sun Gear	2	95-Up	56052	74DT-7D065AA
340C	Reverse Drum	1	95-Up	56061	N.L.
428D	Case (Bushing)	1	95-96	56064	D7FZ-7A034A
428D	Case (Bearing) (Cage Type)	1	97-Up	56064B	F77Z-7R205AA
438D	Bearing, Output Shaft Pilot	1	95-Up	56268	N.L.
446D	Extension Housing (Babbitt) (Bronze = 56066B, C0DP-7A034B)	1	95-Up	56066	D7FZ-7A034A
446D	Extension Housing (Bronze)	1	95-Up	56066B	N.L.
THRUST WASHERS/BEARINGS					
WASHERS					
N.I.	Washer Kit	1	95-96	56200EA	N.L.
150A	Overdrive Sun Gear Drive (Star Washer)	1	95-Up	56214	E5TZ-7660A
212B	Pump/ Center Support .063"	1	85-95	56211C	F0TZ-7D014B
212B	Pump/ Center Support .067"	1	85-95	56211D	F0TZ-7D014C
212B	Pump/ Center Support .071"	1	85-95	56211E	F0TZ-7D014D
212B	Pump/ Center Support .075"	1	85-95	56211G	F0TZ-7D014E
212B	Pump/ Center Support .079"	1	85-95	56211H	F0TZ-7D014F
212B	Pump/ Center Support .094"	1	85-95	56211LA	F0TZ-7D014J
236B	Direct Drum to Forward Drum (Washer) (Metal)	1	95-Up	56229	E5TZ-7C096A
300C	Washer, Bearing to Planet (.350") Bronze	1	95-Up	56232C	F0TZ-7D090A
314C	Sun Shell to Rear Planet Washer	1	95-Up	56243	D4ZZ-7D066A
322C	Rear Planet to Hub (3" OD) (6 Outer Tab)	1	95-96	56244B	F0TZ-7A166B
322C	Sun Shell to Rear Planet (3 Outer Tabs)	1	95-96	56244A	F0TZ-7A166A
322C	Sun Shell to Rear Planet	1	97-Up	56244C	F7ZZ-7M151BA
336C	Between Rear Hub & Sprag Race 3 3/16" OD (Bronze)	1	95-Up	56254B	F0TZ-7D422A
348C	Rear Case Thrust (4.0L) (OE Style)	1	95-Up	56257	N.L.
430D	Output Shaft Park Gear to Case (Large OD)	1	95-96	56263	D4ZZ-7B368A
430D	Output Shaft Park Gear to Case (Small OD)	1	97-Up	56263A	F77Z-7B368AA
BEARINGS					
156A	Race, Overdrive Planet to Overdrive Sun Gear (Front)	1	95-96	56216	E5TZ-7D235B
162A	Bearing, Between Overdrive Planet & Overdrive Ring Gear Hub	1	95-Up	56217	E5TZ-7L495A
206B	Bearing, Center Support Front (.105")	1	95-96	56223A	F3TZ-7L326A
206B	Bearing, Center Support Front	1	97-Up	56229B	F77Z-7M153EB
212B	Bearing, Center Support Rear (.115") (Small ID)	1	95-96	56223AA	F5TZ-7L326A
212B	Bearing, Center Support Rear (.122") (Small ID)	1	95-96	56223AB	F5TZ-7L326B
212B	Bearing, Center Support Rear (.129") (Small ID)	1	95-96	56223AC	F5TZ-7L326C
212B	Bearing, Pump & Center Support (.110") (Large ID)	1	97-Up	56211NB	XW4Z7D014CA
212B	Bearing, Pump & Center Support (.116") (Large ID)	1	97-Up	56211PB	XW4Z7D014DA
212B	Bearing, Pump & Center Support (.124") (Large ID)	1	97-Up	56211RB	XW4Z7D014EA

ILL.		Qty.	Year	Part #	Ref. #
BEARINGS (Cont.)					
212B	Bearing, Pump & Center Support (.132") (Large ID)	1	97-Up	56211SB	XW4Z7D014FA
214B	Bearing, Center Support to Forward Drum (.157")	1	95-96	56226	F3TZ-7C096A
214B	Bearing, Center Support to Forward Drum (.149") (1 Notch)	1	95-96	56226A	F3TZ-7C096B
214B	Bearing, Center Support to Forward Drum (.143") (2 Notch)	1	95-96	56226AA	F3TZ-7C096C
214B	Bearing, Center Support to Forward Drum (.135") (3 Notch)	1	95-96	56226AB	F3TZ-7C096D
236B	Bearing, Direct Drum to Forward Drum	1	97-Up	56229B	F77Z-7M153EB
256B	Bearing, Forward Drum to Planet (Used w/ 56232C)	1	95-Up	56232D	F3TZ-7D234A
306C	Bearing, Between Forward Planet & Hub	1	95-Up	56235A	F2TZ-7F374AA
322C	Bearing, Sun Shell to Rear Planet	1	95-Up	56244C	F7ZZ-7M151BA
326C	Bearing, Rear Planet to Hub	1	95-Up	56229B	F77Z-7M153EB
336C	Bearing, Rear Ring Gear Hub to Case	1	97-Up	56254G	F7ZZ-7M150CA
336C	Bearing & Race Kit, Rear Ring Gear Hub to Case	1	97-Up	56254GK	N.L.
N.I.	Race, Rear Ring Gear Hub to Case	1	97-Up	56255G	F7ZZ-7M150DA
ELECTRICAL COMPONENTS					
502E	Sensor, Input Speed (TSS)	1	95-96	56438H	F5TZ-7M101A
502E	Sensor, Input Speed (TSS)	1	97-Up	46438	XW4Z7M183AA
504E	Case Connector, w/ Internal Wire Harness (16 Prong, 6 Solenoid VB's)	1	95-Up	56444H	F5TZ-7Z409B
510E	Switch, Transmission Range Sensor (MLPS)	1	95-96	76410E	F5AZ-7A247A
510E	Switch, Transmission Range Sensor (MLPS)	1	97-Up	76410EA	F7LZ-7F293AB
516E	Sensor, Output Speed (VSS)	1	95-96	86436A	E9LZ-9E731A
516E	Sensor, Output Speed (VSS) (on case)	1	97-Up	56436H	F7RZ-7H103BA
532E	Solenoid, Shift/ Coast	4	95-Up	56421B	F5TZ-7G484A
538E	Solenoid, TCC (w/o Inductive Signature)	1	95-96	56425A	F5TZ-7F037AA
538E	Solenoid, TCC (w/ Inductive Signature)	1	95-Up	56425B	F77Z-7G136AA
540E	Solenoid, EPC (2 Green Screens)	1	95-96	56431	F5TZ-7H144A
540E	Solenoid, EPC (2 Red Screens)	1	95-Up	56431A	XL2Z-7G383AA
VALVE BODY RECALIBRATION KITS					
N.I.	Shift Kit®, 4R44E, 4R55E, 5R44E, 5R55E (Transgo®)	1	95-Up	T56165H	SK® 44 55E
N.I.	Shift Correction Package, 4R44E, 4R55E, 5R44E, 5R55E (Superior)	1	95-Up	S56165H	K4R/5R55E
VALVE BODY COMPONENTS					
N.I.	Sleeve Kit, Pressure Regulator Valve (req T-37947-TL5)	1	95-Up	56741P-2K	37947-05K
N.I.	Spring, Pressure Regulator (Elevated)	1	95-Up	56741P-3	56947-17
N.I.	Boost Valve Kit, w/ Sleeve 4R44E, 4R55E, 5R55E	1	95-Up	56741	37947-01K
N.I.	Valve, EPC & Engagement Control (req T-37947-TL11)	1	95-Up	56741TK	37947-11K
N.I.	Valve, TCC Regulator	1	95-Up	56741Q-1	37947-38
N.I.	Sleeve Kit, TCC Regulator Valve (req T-37947-TL9)	1	95-Up	56741Q-2K	37947-09K
N.I.	Sleeve Kit, TCC Modulator Valve (req T-37947-TL5)	1	95-Up	56741C-2K	37947-07K
N.I.	Valve Kit, Coast Clutch (Oversized) (req T-37947-TL33)	1	95-Up	56741HK	37947-33K
N.I.	End Plug Kit, Kickdown Control, Manual Low & Throttle Downshift	1	95-Up	56741-6K	37947-13K
N.I.	Relief Valve, EPC Blow Off	1	95-Up	D56741A-1	3L5Z-7M203JA
N.I.	Solenoid Bracket (EPC)	1	95-Up	56843E	XL2Z-7L491AA
PUMPS					
124A	Stator, w/ Gears	1	95-96	56520D	XL2Z-7A103BA
124A	Stator, w/ Gears (Caged Bearing Type)	1	97-Up	56520G	XL2Z-7A103AB
PUMP COMPONENTS					
110A	Plate, Pump	1	95-Up	56544D	F5TZ-7B472A
118A	Pump Gears, O-Ring Type (24T)	1	95-Up	56530A	N.L.
DRUMS & COMPONENTS					
136A	Overdrive (2 Clutch)	1	97-Up	56550C	F77Z-7L669AD
136A	Overdrive (3 Clutch)	1	95-Up	56550B	F0TZ-7L669A
138A	Piston, Overdrive & Direct Clutch (Steel Drums)	1-2	95-Up	56961	E8TZ-7A262A
140A	Springs, Overdrive & Direct Drum Return	20	95-Up	56971	F1TZ-7A480B
142A	Retainer, Overdrive Drum Spring	1	95-Up	56981	ESTZ-7A527A
220B	Direct (5 Clutch)	1	95-Up	56555LA	F5TZ-7D044D
220B	Direct (5 Clutch) 5R55E (Small Piston)	1	97-Up	56555NA	XL2Z-7D044AA
220B	Direct (6 Clutch)	1	95-Up	56555M	F0TZ-7D044C
220B	Direct (6 Clutch) 5R55E (Large Piston)	1	95-Up	56555MA	F0TZ-7D044C
240B	Forward (5 Clutch) Bearing Design	1	95-Up	56554C	N.L.
240B	Forward (5 Clutch) Washer Design	1	95-Up	56554CA	N.L.
240B	Forward (6 Clutch) Bearing Design	1	95-Up	56554D	F0TZ-7A360B

ILL.		Qty.	Year	Part #	Ref. #
DRUMS & COMPONENTS (Cont.)					
240B	Forward (6 Clutch) Washer Design	1	95-Up	56554DA	N.L.
240B	Forward (6 Clutch) (Collar Bearing Design)	1	97-02	56554EB	4L5Z-7A360BA
342D	Reverse (10 Lugs on Drum)	1	95-Up	56556	D4ZZ-7C498A
342D	Reverse (30 Lugs on Drum) (4.0L)	1	95-Up	56556A	F0TZ-7C498A
342D	Reverse (10 Lugs on Drum) 5R55E	1	97-Up	56556B	N.L.
N.I.	Piston Kit, Overdrive Drum (4R44E, 4R55E)	1	95-Up	56560A	N.L.
N.I.	Piston Kit, Overdrive Drum (5R55E)	1	95-Up	56560C	N.L.
N.I.	Piston Kit, Forward Drum	1	95-Up	56564B	D8ZZ-7A262A
N.I.	Piston Kit, Direct Drum (Small Piston)	1	95-Up	56565D	N.L.
N.I.	Piston Kits, Direct Drum (Large Piston)	1	97-Up	56565E	N.L.
PLANETS & COMPONENTS					
158A	Overdrive (w/ Tin Electric Pick-Up)	1	95-Up	56580C	XL2Z-7B446AA
164A	Ring Gear, Overdrive Planet (Used w/ Plastic Caged Sprag)	1	95-Up	56590B	F3TZ-7A153A
304C	Ring Gear, Forward Planet	1	95-Up	56592B	N.L.
304C	Ring Gear Kit, Forward Ring Gear & Hub (Large ID)	1	95-Up	56592BK	N.L.
308C	Forward (6 Gear)	1	95-Up	56582GK	N.L.
324C	Rear (4 Gear)	1	95-Up	56584D	E7SZ-7D006AA
324C	Rear (6 Gear) (10 Driving Lugs) (Bearing Type)	1	95-Up	56584G	XL2Z-7D006AA
324C	Rear (6 Gear) (30 Driving Lugs)	1	95-Up	56584EA	F0TZ-7D006A
332C	Ring Gear Kit, Rear Ring Gear & Hub (w/o Recess)	1	95-96	56594AK	N.L.
332C	Ring Gear Kit, Rear Ring Gear & Hub (w/ Oil Notches)	1	95-96	56594BK	F87Z-7D164AA
334C	Hub, Rear Ring Gear (Except 4.0L)	1	95-Up	56604B	N.L.
334C	Hub, Rear Ring Gear (4.0L)	1	95-Up	56604AA	F87Z-7D164AA
SUN GEARS					
154A	Sun Gear, Overdrive	1	95-Up	56610	F7RZ-7D063AA
312C	Sun Gear & Shell, 4R44E, 4R55E (Exc. 4.0L)	1	95-96	56622K	N.L.
312C	Sun Gear & Shell, 4R44E, 4R55E (4.0L)	1	95-96	56622AK	F0TZ-7D064A
312C	Sun Gear & Shell (No Sensor Holes) (5R44E, 5R55E)	1	97-Up	56622CK	N.L.
312C	Sun Gear & Shell (w/ Sensor Holes) (5R44E, 5R55E)	1	97-Up	56622DK	N.L.
318C	Sun Gear, Forward (No Bushing Type) (4.0L)	1	95-Up	56612A	F0TZ-7D063B
318C	Sun Gear, Forward (2 Bushing Type) (Except 4.0L)	1	95-Up	56612	D4ZZ-7D063A
ONE WAY CLUTCHES					
202B	Sprag, Overdrive Narrow	1	95-96	56650B	92GT-7C109AA
202B	Sprag, Overdrive Wide	1	97-Up	56650H	BWK-1310362
344C	Sprag, Rear (Low) Clutch 26 Elements	1	95-96	56654A	90GT-7F109BB
344C	Sprag, Rear (Low) Clutch 26 Elements	1	97-Up	56654HA	97GT-7E193AD
346C	Inner Race, Rear Sprag (Roller Type Sprag)	1	95-Up	56664A	N.L.
346C	Inner Race, Rear Sprag (Lug Type Sprag)	1	95-Up	A56664B	N.L.
SHELLS & SUPPORTS					
208B	Center Support	1	95-Up	56630B	F5TZ-7A130BB
208B	Center Support (Caged Bearing Design)	1	97-Up	56630C	F77Z-7A130CB
312C	Shell, Driving 4R44E, 4R55E (Exc. 4.0L)	1	95-96	56622	N.L.
312C	Shell, Driving 4R44E, 4R55E (4.0L)	1	95-96	56622A	F0TZ-7D064A
312C	Shell, Driving 5R44E, 5R55E (No Sensor Holes)	1	97-Up	56622C	F77Z-7D064BB
312C	Shell, Driving 5R44E, 5R55E (w/Sensor Holes)	1	97-Up	56622D	1L5Z-7D064AA
SHAFTS					
100A	Input Shaft (10" Long)	1	95-Up	56670B	XL2Z-7017AA
204B	Center Shaft, 4R44E, 4R55E	1	95-96	56674B	F2TZ-7A658B
204B	Center Shaft, 5R44E, 5R55E (Angled Shoulder) (4.0L)	1	97-Up	56674C	F77Z-7A658AB
VALVE BODIES & GOVERNORS					
534E	4R44E (Exc. 4.0L)	1	95-Up	56740-2	N.L.
534E	4R55E (4.0L)	1	95-96	56740-1	N.L.
534E	5R55E (4.0L)	1	97-Up	56740-3	N.L.
CASES/HOUSINGS & COMPONENTS					
108A	Bell Housing, 4.0L (w/ 2 Bolt Starter)	1	95-96	56750J	N.L.
108A	Bell Housing, 4.0L (w/ 2 Bolt Starter)	1	97-Up	56750JA	N.L.
410D	Case, 4.0L (Lug Type Sprag) (Electronic)	1	95-96	56760H	N.L.
410D	Case (w/ 1 Sensor on Case) 5R55E	1	97-Up	56760MA	E5TZ-7A377BC

ILL.		Qty.	Year	Part #	Ref. #
CASES/HOUSINGS & COMPONENTS (Cont.)					
410D	Case (w/ 2 Sensors on Case) 5R55E	1	97-Up	56760M	F77Z-7005DB
548E	Pan (2wd)	1	95-Up	56765G	N.L.
548E	Pan (4wd)	1	95-Up	56765H	N.L.
MISCELLANEOUS COMPONENTS					
N.I.	Band Apply Strut	1	95-Up	56915-3	D4ZZ-7D029A
550E	Nut, Band Adjustment Nut (Coarse Threads)	1-2	95-Up	26922	380850-S
N.I.	Clip, Case Connector to Wire Harness	1	95-Up	56444H-4	N.L.
N.I.	Flywheel Spacer, 6 Bolt (4.0L)	1	95-Up	AF235S	D4ZZ-6434A
N.I.	Flywheel Spacer, 8 Bolt (4.0L)	1	95-Up	AF235SA	F77Z-6434AA
SERVOS & ACCUMULATORS					
406D	Piston, Interm & OD Servo (1.625" ID Cover # FB)	1-2	95-Up	56902AA	F0TZ-7D021B
406D	Piston, Interm & OD Servo (1.690" ID Cover # EB)	1-2	95-Up	56902AB	F7ZZ-7D021EA
406D	Piston, Interm & OD Servo (1.750" ID Cover # DB)	1-2	95-Up	56902AC	F0TZ-7D021A
406D	Piston, Interm & OD Servo (1.812" ID Cover # CA/CB)	1-2	95-Up	56902AD	E3ZZ-7D021A
406D	Piston, Interm & OD Servo (1.920"ID Cover # BA/BB)	1-2	95-Up	56902AE	F2ZZ-7D021A
406D	Piston, Interm & OD Servo (2.075"ID Cover # AA/AB)	1-2	95-Up	56902AG	D4ZZ-7D021A
406D	Piston, Interm & OD Servo (2.317"ID Cover # ZC)	1-2	97-Up	56902AJ	F77Z-7D021ZA
520E	Piston, Reverse Servo	1	95-Up	56912	N.L.
N.I.	Reverse Servo Extendo Pin	1	95-Up	56913A	56605E
TECHNICAL MANUALS					
N.I.	Tech Manual, 4R44E, 4R55E (Electronic)	1	95-Up	56400R	83-4R44E,55E
N.I.	Tech Manual, 5R55E (5 Speed)	1	95-Up	56400S	83-5R55ETM
TOOLS					
N.I.	Pump Alignment Tool (Adapt-a-Case)	1	95-Up	T-0168AAC	N.L.
N.I.	Linkage Pin Remover Tool	1	95-Up	T-9183	N.L.
N.I.	Linkage Pin Tool Replacement Pins (3mm)	1	95-Up	T-9183-1	N.L.

Notes

TOLEDO TRANS-KIT · SEAL AFTERMARKET PRODUCTS · your source for engineered solutions · BRYCO · ProSELECT · RoadMaster

PRODUCT ANNOUNCEMENT

5R55N 5R55W/S SERVO PISTONS

Seal Aftermarket Products now offers the Servo Pistons covering 5R55N 1999-Up and 5R55S/W 2002-Up.
Please call your Sales Representative for pricing & availability.

16907A
Piston 5R55N Intermediate Servo 1999-Up [2.78in]
OE # XW4Z-7D021-HA





16907
Piston 5R55N Intermediate Servo 1999-Up [2.58in]
OE # XW4Z-7D021-JA

16907B
Piston 5R55W 5R55S Intermediate Servo 2002-Up [2.80in]
OE # 1L2Z-7D021-CA





16907C
Piston 5R55W 5R55S Intermediate Servo 2002-Up [2.52in]
OE # 3W4Z-7D021-AA

16902A
Piston 5R55N 5R55W 5R55S Overdrive Servo 1999-Up [2.915in]
OE # XW4Z-7D021-LA





16902
Piston 5R55N 5R55W 5R55S Overdrive Servo 1999-Up [2.575in]
OE # XW4Z-7D021-KA
4W4P-7E221-KC

16912
Piston 5R55N Low/Reverse Servo 1999-Up
OE # XW4Z-7D189-AA





16912A
Piston 5R55W 5R55S Low/Reverse Servo 2002-Up
OE # 4L2Z-7D189-AA

Release Date 4/23/2014

Sales Policy: All shipments are FCA Pembroke Park. Price and Availability subject to change

B000012A

© 2014 Seal Aftermarket Products LLC. ALL RIGHTS RESERVED. Possession of price list does not constitute offer to sell

Disclaimer - All information has been checked for accuracy, however no liability can be assumed for errors and omissions

Seal Aftermarket Products LLC · 2315 SW 32nd Avenue · Pembroke Park FL 33023 · [P] (800) 582-2760 · [F] 954-364-2401 · www.sealaftermarketproducts.com

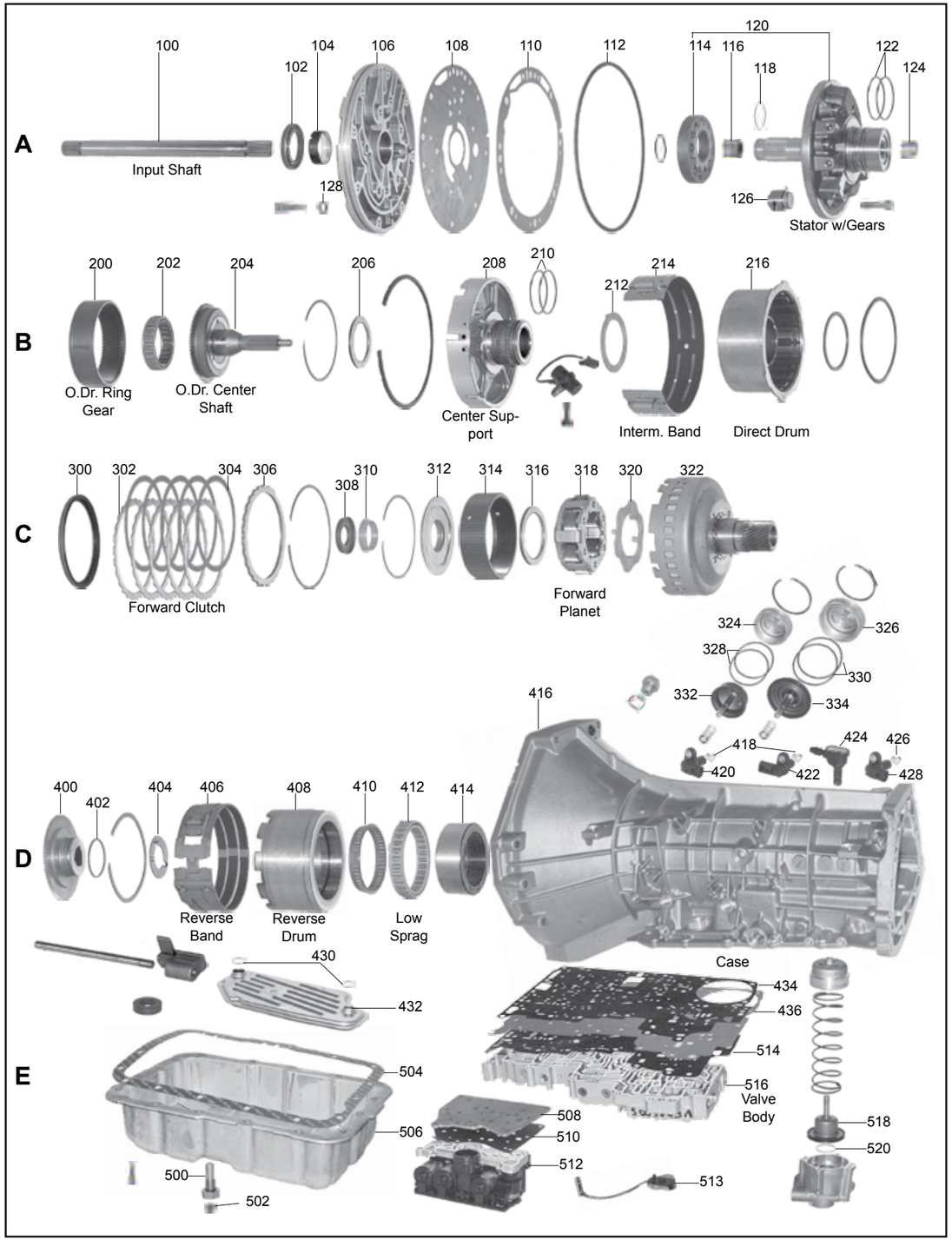
A
100
102
104
106
108
110
112
114
116
118
120
122
124
126
128
Input Shaft
Stator w/Gears
B
200
202
204
206
208
210
212
214
216
O.Dr. Ring Gear
O.Dr. Center Shaft
Center Support
Interm. Band
Direct Drum
C
300
302
304
306
308
310
312
314
316
318
320
322
Forward Clutch
Forward Planet
324
326
328
330
332
334
416
418
420
422
424
426
428
Case
D
400
402
404
406
408
410
412
414
Reverse Band
Reverse Drum
Low Sprag
430
432
434
436
514
516
Valve Body
E
504
506
500
502
508
510
512
513
518
520

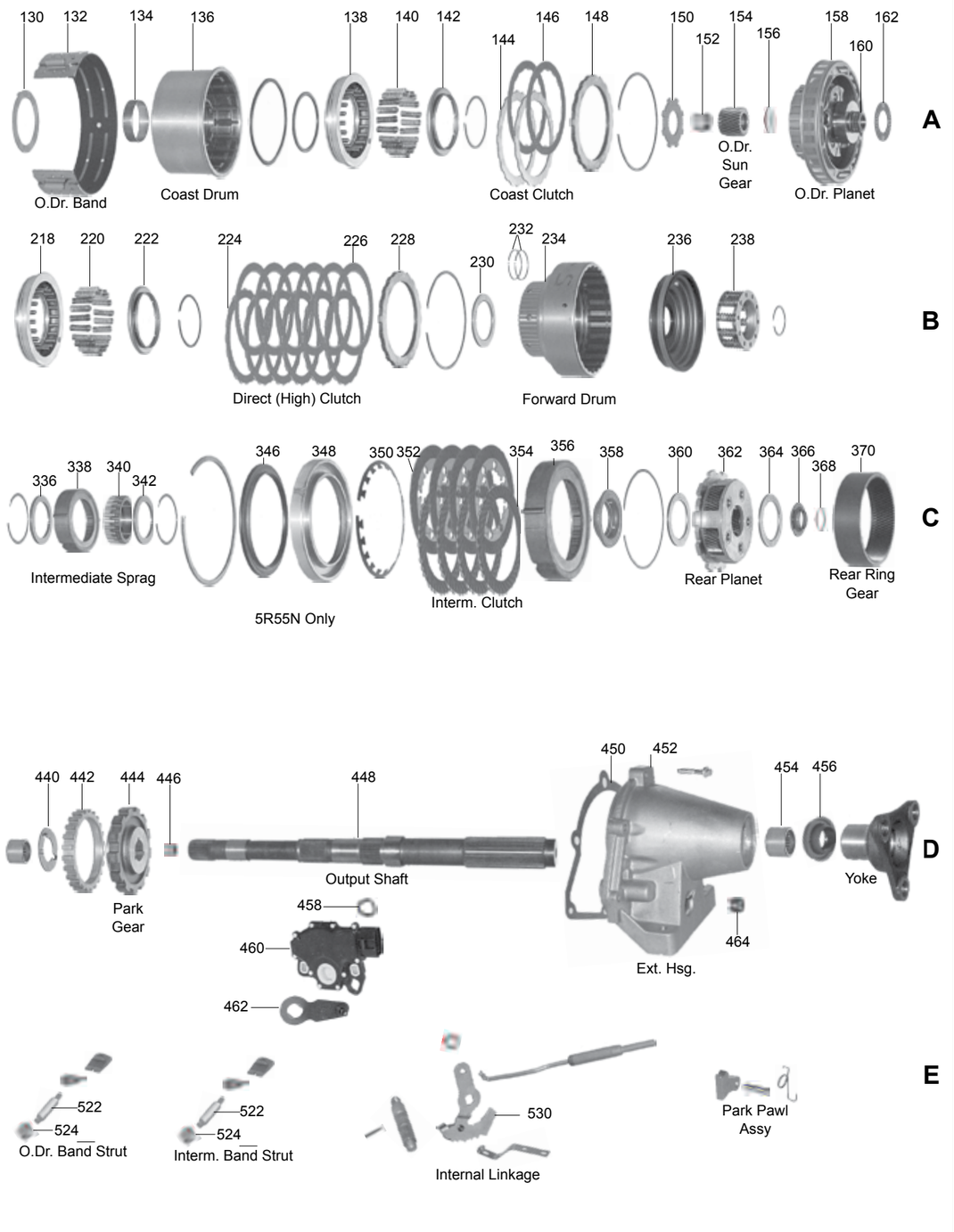
A
130
132
134
136
138
140
142
144
146
148
150
152
154
156
158
160
162
O.Dr. Band
Coast Drum
Coast Clutch
O.Dr. Sun Gear
O.Dr. Planet
B
218
220
222
224
226
228
230
232
234
236
238
Direct (High) Clutch
Forward Drum
C
336
338
340
342
346
348
350
352
354
356
358
360
362
364
366
368
370
Intermediate Sprag
5R55N Only
Interm. Clutch
Rear Planet
Rear Ring Gear
D
440
442
444
446
448
450
452
454
456
458
460
462
464
Park Gear
Output Shaft
Ext. Hsg.
Yoke
E
522
524
O.Dr. Band Strut
Interm. Band Strut
530
Internal Linkage
Park Pawl Assy

ILL.		Qty.	Year	Part #	Ref. #
DELUXE KITS (SUPER KITS WITH STEELS)					
N.I.	5R55N (w/ Pistons)	1	99-Up	16008	N.L.
N.I.	5R55W, 5R55S (w/ Pistons)	1	02-Up	16008A	N.L.
MASTER OVERHAUL KITS (WITH STEELS)					
N.I.	5R55N (w/ Pistons)	1	99-Up	16006	N.L.
N.I.	5R55W, 5R55S (w/ Pistons)	1	02-Up	16006A	N.L.
MASTER OVERHAUL KITS (LESS STEELS)					
N.I.	5R55N (w/ Pistons)	1	99-Up	16004	N.L.
N.I.	5R55W, 5R55S (w/ Pistons)	1	02-Up	16004A	N.L.
OVERHAUL KITS (WITH RINGS AND SEALS)					
N.I.	5R55N (w/o Pistons)	1	99-Up	16002B	N.L.
N.I.	5R55W, 5R55S (w/o Pistons)	1	02-Up	16002C	N.L.
BONDED PISTONS					
236B	Piston, Forward Clutch (Bonded) (5R55W/S)	1	02-Up	16964A	N.L.
300C	Cushion, Forward Clutch (Bonded) (5R55N)	1	99-02	16964	XW4Z7B070AA
346C	Piston, Intermediate Clutch (Bonded) (5R55N)	1	99-02	16962	XW4Z7E005AA
GASKETS & O-RINGS					
110A	Gasket, Pump	1	99-Up	16310	XW4Z7A136AA
112A	O-Ring, Front Pump	1	99-Up	16311	XW4Z7A248AA
434D	Gasket, VB Upper (5R55N)	1	99-Up	16320	N.L.
434D	Gasket, VB Upper (5R55W, 5R55S)	1	02-Up	16320A	N.L.
450D	Gasket, Extension Housing	1	99-Up	16305	XW4Z7A248AA
504E	Gasket, Pan	1	99-Up	16300W	XW4Z7A191CA
514E	Gasket, VB Lower (5R55N)	1	99-Up	16321	N.L.
514E	Gasket, VB Lower (5R55W, 5R55S)	1	02-Up	16321A	N.L.
METAL CLAD SEALS					
102A	Front Pump (Rubber Coated)	1	99-Up	56070B	F77Z-7A248AA
456D	Rear (5R55N & 05-Up Mustang 5R55S)	1	99-Up	16074	XW4Z-7052AA
456D	Rear (5R55W/S except 05-Up Mustang)	1	02-Up	16074A	F6UZ-7052A
456D	Adapter Housing (4wd)	1	02-Up	16074B	1L2Z-7052BA
458D	Main Control Lever Seal	1	99-Up	36072	C7AZ-7B498A
SEALING RINGS & KITS					
N.I.	Sealing Ring Kit	1	99-Up	16175K	N.L.
FRICTION PLATES					
146A	Overdrive	2	99-Up	56100B	F7ZZ-7B164CA
224B	Direct (1 Sided, 20 External Teeth)	5	99-Up	16126	XW4Z7B442BA
226B	Direct (1 Sided, 48 Internal Teeth)	5	99-Up	16106	XW4Z7B164BA
226B	Direct (2 Sided)	5	08-Up	16106A	N.L.
304C	Forward	5	99-Up	16108	XW4Z7B164AA
352C	Intermediate (1 Sided, 24 Internal Teeth)	4	99-Up	16104	XW4Z7B164CA
354C	Intermediate (1 Sided, 33 External Teeth)	4	99-Up	16124	XW4Z7B442CA
STEEL PLATES					
144A	Overdrive	2	99-Up	56120B	F0TZ-7B442B
224B	Direct	5	08-Up	16126A	N.L.
302C	Forward	5	99-Up	16128	XW4Z7B442AB
PRESSURE PLATES					
148A	Direct & Overdrive (.200")	1	99-Up	56140B	F0TZ-7B066B
306C	Forward	1	99-Up	16148	N.L.
FILTERS					
432D	5R55N (0.4" Pickup Tube)	1	99-02	16010	XW4Z7A098BB
432D	5R55S (1.3" Pickup Tube) (Car)	1	03-Up	16010B	3W4Z7A098AA
432D	5R55S/W (2.4" Pickup Tube) (SUV)	1	02-Up	16010A	XW4Z7A098BB
N.I.	Screen / Gasket, Solenoid Block (5R55N)	1	99-Up	16016	N.L.
N.I.	Screen / Gasket, Solenoid Block (5R55W/S)	1	02-Up	16016A	N.L.

ILL.		Qty.	Year	Part #	Ref. #
FILTER KITS					
N.I.	5R55N (Plastic) (0.4" Pickup Tube)	1	99-Up	16011	N.L.
N.I.	5R55S (Metal/Plastic) (1.3" Pickup Tube) (Car)	1	03-Up	16011B	N.L.
N.I.	5R55S/W (Metal/Plastic) (2.4" Pickup Tube) (SUV)	1	02-Up	16011A	N.L.
BANDS					
132A	Intermediate & Overdrive (5R55N)	1	99-Up	56022E	74DT-7B034AA
132A	Intermediate & Overdrive (5R55W/S) (Hi-Energy)	1	02-Up	16022	1L4P-7D034AA
406D	Low/ Reverse (Split)	1	99-Up	16024	XW4Z7D095AA
BUSHINGS					
N.I.	Bushing Kit (All)	1	99-Up	16030	N.L.
104A	Converter Housing (Babbitt)	1	99-Up	56034	D4TP-7A834AB
438D	Case (Caged Bearing)	1	99-Up	56263B	F77Z-7R205AA
THRUST WASHERS/BEARINGS					
WASHERS					
130A	Pump Cover to Overdrive Drum (1.91mm) (Red)	1	99-Up	56211GA	N.L.
130A	Pump Cover to Overdrive Drum (2.10mm) (Black)	1	99-Up	16211R	F7TZ-7D014PA
130A	Pump Cover to Overdrive Drum (1.75mm) (Brown)	1	99-Up	16211X	XW4Z7D014XA
130A	Pump Cover to Overdrive Drum (2.25mm) (Orange)	1	99-Up	16211Y	XW4Z7D014YA
130A	Pump Cover to Overdrive Drum (2.45mm) (Purple)	1	99-Up	16211Z	XW4Z7D014ZA
150A	Overdrive Sun Gear (Drive Plate) (24 Inner Teeth)	1	99-02	16214	XW4Z7660AA
150A	Overdrive Sun Gear (Drive Plate) (38 Inner Teeth)	1	03-Up	16214A	N.L.
BEARINGS					
212B	Center Support to Direct Drum (.110")	1	99-Up	56211NB	XW4Z7D014CA
212B	Center Support to Direct Drum (.116")	1	99-Up	56211PB	XW4Z7D014DA
212B	Center Support to Direct Drum (.124")	1	99-Up	56211RB	XW4Z7D014EA
212B	Center Support to Direct Drum (.132")	1	99-Up	56211SB	XW4Z7D014FA
316C	Bearing, Front Hub to Planet	1	03-Up	16235	XW4Z7F374AA
404D	Rear Ring Gear Hub to Case	1	99-Up	96235	F3RZ-7H027A
ELECTRICAL COMPONENTS					
420D	Sensor, Intermediate Shaft Speed (TSS) (5R55N)	1	99-Up	16438	XW4Z7M183AA
428D	Sensor, Input & Output Speed (TSS, VSS)	2	99-Up	16436	XW4Z7H103AA
460D	Switch, Neutral Safety (Outside Mounting Hole) (5R55N)	1	99-Up	16410	5W4Z7F293AA
460D	Switch, Neutral Safety (Inside Mounting Hole) (5R55W/S)	1	02-Up	16410A	5L2Z-7F293AA
512E	Solenoid Block (5R55N)	1	99-Up	16420	XW4Z7G391AB
512E	Solenoid Block (5R55W/S)	1	02-Up	16420B	4L2Z-7G391AA
N.I.	Sensor, Fluid Pressure (5R55N)	1	99-Up	16411	XW4Z7E440AA
N.I.	Harness Repair, External (5R55W, 5R55S)	1	02-Up	16445A	N.L.
VALVE BODY RECALIBRATION KITS					
N.I.	Shift Kit®, 5R55N 99-02, 5R55W/S 02-07 (Transgo®)	1	99-08	T16165	SK® 5R55W
N.I.	Reprogramming Kit™, 5R55W/S (Transgo®)	1	02-07	T16169	5R55W-HD2
PUMPS					
N.I.	Pump Assembly	1	99-Up	16500	XW4Z7A103AC
PUMP COMPONENTS					
114A	Pump Gears (11 Inner Teeth)	1	99-Up	16530	N.L.
126A	Valve, Line Pressure Relief	1	99-Up	D16507A-1	XW4Z-7H411A
DRUMS & COMPONENTS					
136A	Overdrive (.320" Narrow Lug Type Center Hub)	1	99-Up	16550	XW4Z7L669AA
136A	Overdrive (.420" Wide Lug Type Center Hub)	1	99-01	16550A	N.L.
216B	Direct (4 Clutch)	1	99-Up	16555	XW4Z7D044CB
216B	Direct (5 Clutch)	1	99-Up	16555A	N.L.
234B	Forward	1	99-Up	16554	1L2Z-7A360AA
236B	Piston, Forward Clutch (Bonded) (5R55W/)	1	02-Up	16964A	N.L.
238B	Spring & Retainer Assembly, Forward	1	99-Up	16974	N.L.
300C	Cushion, Forward Clutch (Bonded) (5R55N)	1	99-02	16964	XW4Z7B070AA
346C	Piston, Intermediate Clutch (Bonded) (5R55N)	1	99-02	16962	XW4Z7E005AA
350C	Spring, Belleville Intermediate Clutch	1	99-Up	16972	XW4Z7B070CA

ILL.		Qty.	Year	Part #	Ref. #
DRUMS & COMPONENTS (Cont.)					
356C	Intermediate (5R55N)	1	99-Up	16552	XW4Z7F340BA
408D	Reverse (May Not Include The Sprag)	1	99-Up	16556	XW4P7E193AA
PLANETS & COMPONENTS					
158A	Planet, Overdrive (25T Gear) (Used w/ 24T Sun Gear)	1	99-02	16580	XW4Z7B446BA
158A	Planet, Overdrive (28T Gear) (Used w/ 38T Sun Gear)	1	02-Up	16580A	2L2Z-7B446AA
200B	Ring Gear, Overdrive (94T) (Used w/ 28T Sun Gear)	1	02-Up	16590A	4L2Z-7A153AA
200B	Ring Gear, Overdrive (72T) (Used w/ 25T Sun Gear)	1	99-Up	56590B	F3TZ-7A153A
312C	Hub, Forward Ring Gear	1	99-Up	16602	9L2Z-7B067A
314C	Ring Gear, Front (85T) (Used w/ 19T Planet)	1	99-Up	16592	4L2Z7D392AA
314C	Ring Gear, Front (100T) (Used w/ 23T Planet)	1	99-Up	16592A	N.L.
318C	Planet, Front (6 Gears) (19T) (Used w/ 47T Sun Gear)	1	99-Up	16582	XW4Z7B446BA
318C	Planet, Front (6 Gears) (23T) (Used w/ 55T Sun Gear)	1	99-Up	16582A	YW4Z7A398AA
362C	Planet, Rear (5 Gears)	1	99-Up	16584	XW4Z7D006AA
370C	Ring Gear, Rear	1	99-Up	16594	4W4Z7A153AA
400D	Hub, Rear Ring Gear	1	99-Up	16604	N.L.
SUN GEARS					
154A	Sun Gear, Overdrive (24T)	1	99-Up	56610	F7RZ-7D063AA
154A	Sun Gear, Overdrive (38T)	1	02-Up	16610A	2L2Z-7D063AA
ONE WAY CLUTCHES					
202B	Sprag, Overdrive	1	99-Up	56650H	BWK-1310362
340C	Sprag, Intermediate w/ outer Race	1	99-Up	16652	XW4Z7A089CA
SHELLS & SUPPORTS					
208B	Center Support, Dual Bearing Type	1	99-Up	56630C	F77Z-7A130CB
322C	Shell, Sun Gear (Bearing Style) (47T on the Forward Sun Gear)	1	99-01	16622	2W4Z7A019AA
322C	Shell, Sun Gear (Bearing Style) (55T on the Forward Sun Gear)	1	01-Up	16622B	YW4Z7A019AA
322C	Shell, Sun Gear (Non Bearing Style) (55T on the Forward Sun Gear)	1	02-Up	16622A	1L2Z-7A019BA
SHAFTS					
100A	Shaft, Input (10.25" Long)	1	99-Up	16670	XW4Z-7017AA
204B	Shaft, Overdrive Center (72T)	1	99-Up	56674C	F77Z-7A658AB
204B	Shaft, Overdrive Center (94T)	1	02-Up	16674A	N.L.
448D	Shaft, Output 2wd (11.5" w/ Bolt on Yoke) (5R55N)	1	99-02	16678	N.L.
448D	Shaft, Output 2wd (15.5") (5R55W, 5R55S)	1	02-Up	16678A	N.L.
448D	Shaft, Output 4wd (11.5") (5R55W, 5R55S)	1	02-Up	16678B	N.L.
VALVE BODIES & GOVERNORS					
516E	Valve Body (No Solenoid Pack, No Top Plate) (5R55N)	1	99-Up	16740-1	N.L.
516E	Valve Body (No Solenoid Pack, Incl Top Plate) (5R55W/S)	1	02-Up	16740-2	N.L.
N.I.	Sleeve & Plunger, TCC Modulator	1	02-Up	16741C	N.L.
N.I.	Spring, 4-3 Pre Stroke Valve	1	99-Up	16741G-3	N.L.
N.I.	Valve & Sleeve, TCC Modulator (req T-F-56947J-TL15 & T-VB-FIX)	1	99-Up	16741CB	N.L.
CASES/HOUSINGS & COMPONENTS					
416D	Case (Driver Side Starter) (5R55W/S)	1	02-Up	16760A	N.L.
416D	Case (Passenger Side Starter) (5R55W/S)	1	02-Up	16760C	N.L.
452D	Extension Housing (2wd) (2 Mount Bolts) (5R55W/S)	1	02-Up	16770A	N.L.
452D	Extension Housing (4wd) (5R55W/S)	1	02-Up	16770B	N.L.
506E	Pan (w/ Ribs) (5R55N)	1	99-02	16765	N.L.
506E	Pan (No Ribs, w/ Pickup Sump) (5R55W/S)	1	02-Up	16765A	N.L.
MISCELLANEOUS COMPONENTS					
366C	Oil Dam, Output Hub	1	99-Up	16698	XW4Z7B176AA
500E	Drain Plug (Fluid Level Plug) (1.850") (5R55N)	1	99-Up	16494	4W4Z7A010AA
500E	Drain Plug (Fluid Level Plug) (1.420") (5R55W, 5R55S)	1	02-Up	16494B	6L2Z-7A010AA
530E	Detent Lever, Manual Valve (Rooster Comb)	1	99-Up	16991-4	1L2Z-7A115AA

ILL.		Qty.	Year	Part #	Ref. #
SERVOS & ACCUMULATORS					
332C	Piston, Overdrive Servo (2.575" / 2.900") (Bonded)	1	99-Up	16902	4W4Z7D021KA
332C	Piston, Overdrive Servo (2.900" / 2.900") (Bonded)	1	99-Up	16902A	4W4Z7D021LA
334C	Piston, Interm Servo (2.580" / 2.890") (Yellow Dot) (5R55N)	1	99-02	16907	XW4Z7D021JA
334C	Piston, Interm Servo (2.780" / 2.890") (Green Dot) (5R55N)	1	99-02	16907A	XW4Z7D021HA
334C	Piston, Interm Servo (2.840" / 3.520") (Pink Dot) (5R55W, 5R55S)	1	02-Up	16907B	1L2Z-7D021CA
334C	Piston, Interm Servo (2.525" / 3.520") (White Dot) (Lincoln Tag B)	1	03-Up	16907C	3W4Z7D021AA
518E	Piston, Low/ Reverse Servo (Bonded) (5R55N)	1	99-02	16912	XW4Z7D189AA
518E	Piston, Low/ Reverse Servo (Bonded) (5R55W/S)	1	02-Up	16912A	4L2Z-7D189AA
TECHNICAL MANUALS					
N.I.	Tech Manual (5R55N)	1	99-Up	16400	5R55N-TM
N.I.	Tech Manual (5R55W/S)	1	99-Up	16400A	5R55S/5R55W
N.I.	ATRA Rebuild Manual (5R55N, 5R55W/S)	1	99-Up	16400C	5R55N-REB
N.I.	ATRA ID, Diagnosis & Testing Manual (5R55N, 5R55W/S)	1	99-Up	16400B	5R55N-DIAG
TOOLS					
N.I.	Pump Alignment Tool	1	99-Up	T-0168AAC	N.L.
N.I.	Servo Pin Bore Repair (Overdrive & Intermediate)	1	99-Up	T-9213	N.L.
N.I.	Overdrive Bushing, Servo Pin Bore Repair	1	99-Up	T-9213-SL	N.L.
N.I.	Intermediate Bushing, Servo Pin Bore Repair	1	99-Up	T-9213A-SL	N.L.

Notes

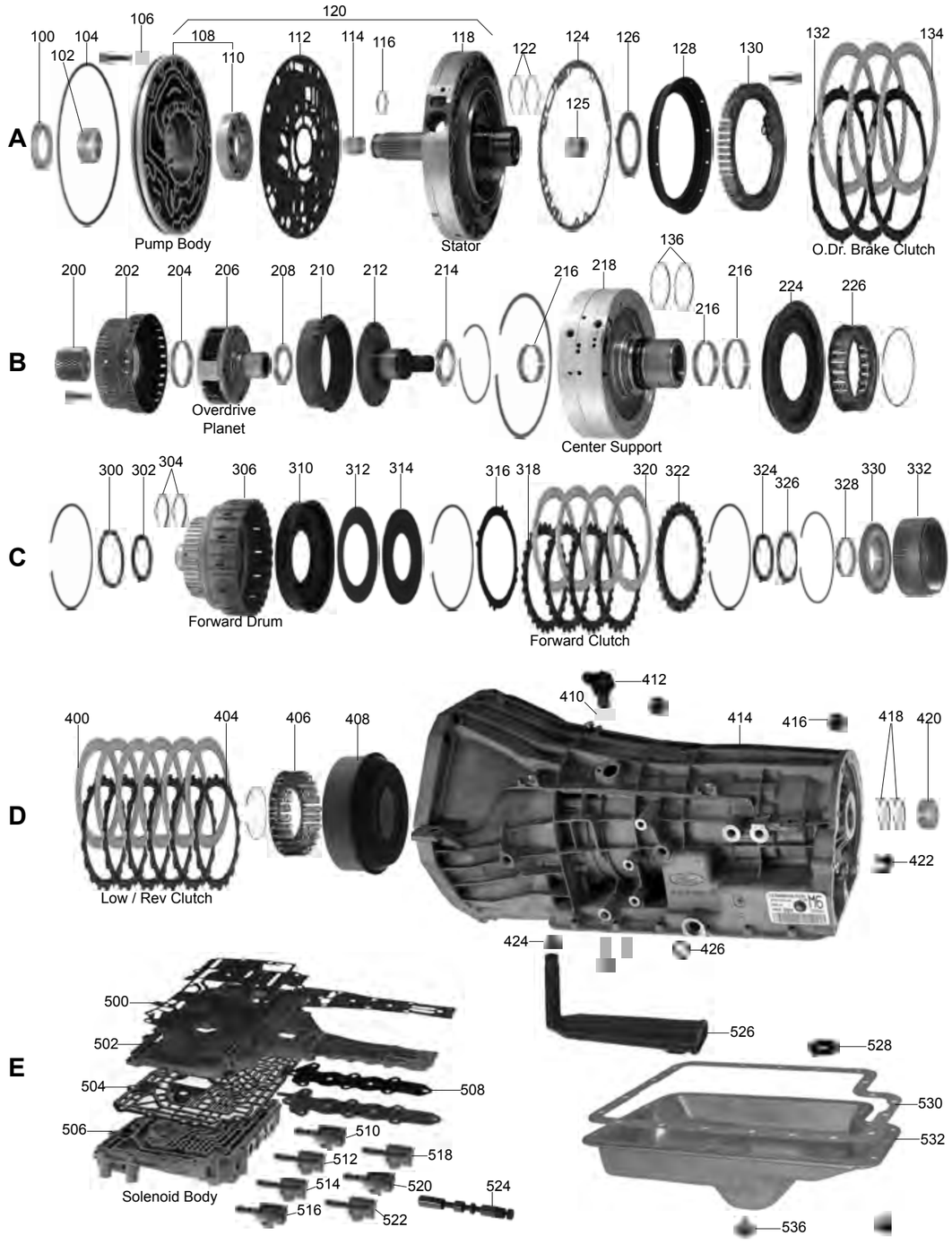
A
B
C
D
E
Pump Body
Stator
O.Dr. Brake Clutch
Overdrive Planet
Center Support
Forward Drum
Forward Clutch
Low / Rev Clutch
Solenoid Body

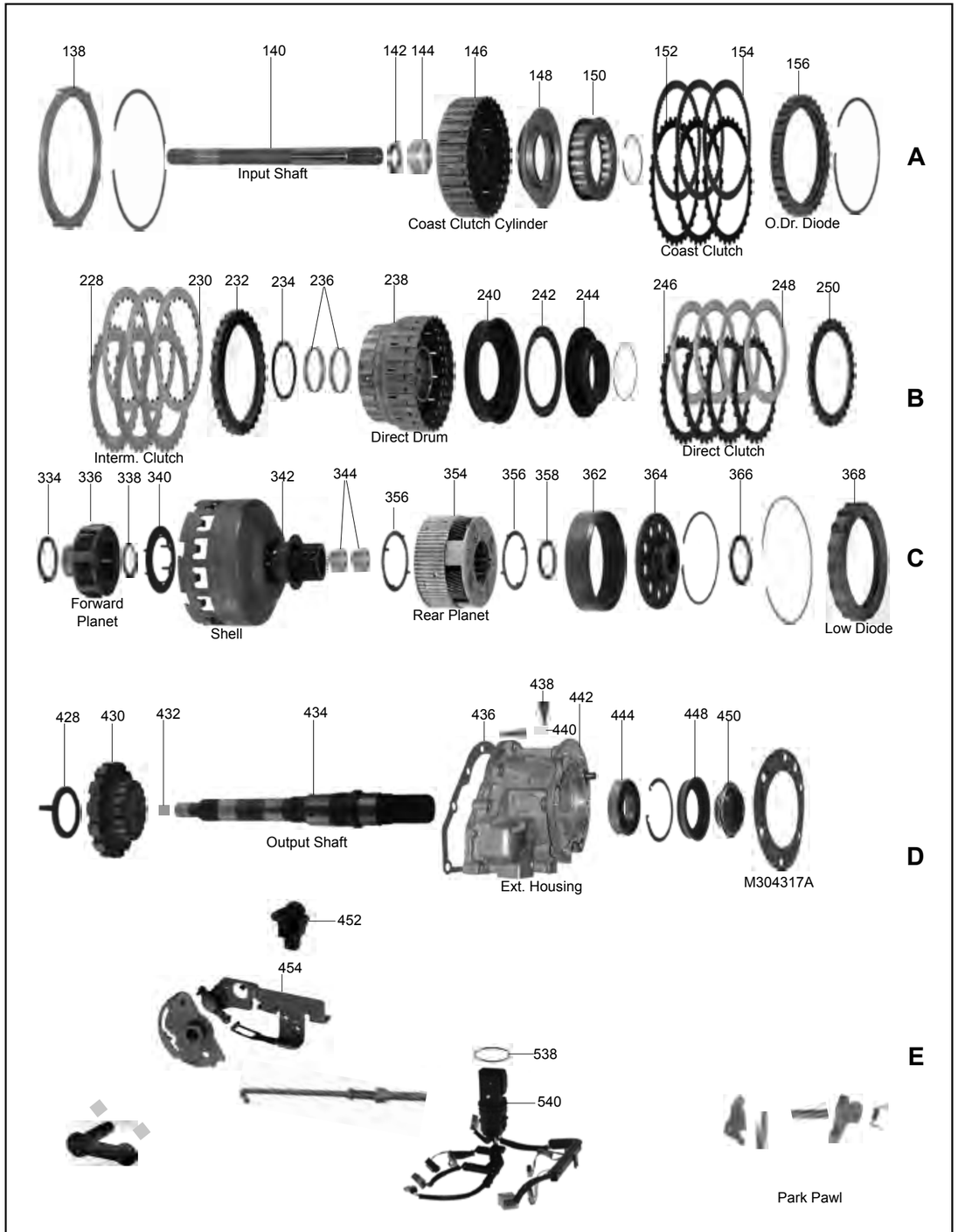
A
B
C
D
E
Input Shaft
Coast Clutch Cylinder
Coast Clutch
O.Dr. Diode
Interm. Clutch
Direct Drum
Direct Clutch
Forward Planet
Shell
Rear Planet
Low Diode
Output Shaft
Ext. Housing
M304317A
Park Pawl

ILL.		Qty.	Year	Part #	Ref. #
DELUXE KITS (SUPER KITS WITH STEELS)					
N.I.	5R110W (w/ Pistons)	1	03-04	136008	N.L.
N.I.	5R110W (w/ Pistons)	1	05-Up	136008A	N.L.
MASTER OVERHAUL KITS (WITH STEELS)					
N.I.	5R110W (w/ Pistons)	1	03-04	136006	N.L.
N.I.	5R110W (w/ Pistons)	1	05-Up	136006A	N.L.
MASTER OVERHAUL KITS (LESS STEELS)					
N.I.	5R110W (w/ Pistons)	1	03-04	136004	N.L.
N.I.	5R110W (w/ Pistons)	1	05-Up	136004A	N.L.
OVERHAUL KITS (WITH RINGS AND SEALS)					
N.I.	5R110W (w/ Pistons)	1	03-Up	136002	N.L.
N.I.	5R110W (w/o Pistons)	1	03-Up	136002A	N.L.
BONDED PISTONS					
N.I.	Piston Kit	1	03-Up	136960K	N.L.
128A	Piston, Overdrive (Bonded Piston)	1	03-Up	136960	3C3Z-7A262DA
148A	Piston, Coast (Bonded Piston)	1	03-Up	136969	3C3Z-7A262CA
224B	Piston, Intermediate (Bonded Piston)	1	03-Up	136962	3C3Z-7E005AA
240B	Piston, Direct (Bonded Piston)	1	03-Up	136965	3C3Z-7A262BA
244B	Piston, Direct Balance (Bonded Piston)	1	03-Up	136965A	3C3Z-7H359AA
310C	Piston, Forward (Bonded Piston)	1	03-Up	136964	3C3Z-7A262AA
314C	Piston, Forward Balance (Bonded Piston)	1	03-Up	136964A	3C3Z-7H360AA
408D	Piston, Low/ Reverse (Bonded Piston)	1	03-Up	136967	3C3Z-7D402AB
GASKETS & O-RINGS					
104A	Pump O-Ring	1	03-Up	36311E	E9TZ-7A248A
124A	Pump Gasket	1	03-Up	136310	3C3Z-7A136AA
500E	Gasket, Valve Body	1	03-Up	136320	3C3Z-7C155DA
508E	Gasket, Valve Body Support Plate	1	03-Up	136322	3C3Z-7H038AA
530E	Pan Gasket	1	03-Up	36300EW	F6TZ-7A191A
N.I.	O-Ring, In Line Filter	1	03-Up	136378	N.L.
METAL CLAD SEALS					
100A	Front	1	03-Up	136070	3C3Z-7A248AA
426D	Manual Lever Seal	1	03-Up	36072	C7AZ-7B498A
448D	Rear (2wd) (Slip Yoke)	1	03-Up	136074	6C6Z-7052CA
448D	Rear (4wd) (Bolt-on Yoke)	1	03-Up	136074A	N.L.
SEALING RINGS & KITS					
N.I.	Sealing Ring Kit	1	03-Up	136175K	N.L.
FRICTION PLATES					
134A	Overdrive	3	03-Up	36100EA	F81P-7B164BA
154A	Coast	3	03-Up	136112	N.L.
230B	Intermediate (24T)	3	03-04	136104	3C3Z-7B164EA
230B	Intermediate (96T)	4	05-Up	136104A	N.L.
248B	Direct	4	03-Up	136106	N.L.
320C	Forward (90T)	4	03-04	136108	N.L.
320C	Forward (76T)	4	05-Up	136108A	5C3Z-7B164BA
400D	Low/ Reverse	6	03-Up	36110	E0UP-7E312AA
STEEL PLATES					
132A	Overdrive	3	03-Up	136120	3C3Z-7B442AA
152A	Coast	3	03-Up	136132	3C3ZB7442EA
228B	Intermediate (.125")	3	03-04	136124	3C3ZB7442BA
228B	Intermediate (.115")	4	05-Up	136124A	N.L.
246B	Direct (5.120" ID)	4	03-Up	136126	3C3Z-7B442CA
318C	Forward (5.120"ID)	4	03-04	136126	3C3Z-7B442CA
318C	Forward (5.374" ID)	4	05-Up	136128	N.L.
404D	Low/ Reverse	6	03-Up	36130	E9TZ-7B442E

ILL.		Qty.	Year	Part #	Ref. #
PRESSURE PLATES					
138A	Overdrive (w/o PTO)	1	03-Up	36140C	3C3Z-7B066EA
138A	Overdrive (Flat) (w/ PTO)	1	03-Up	36140B	3C3Z-7B066EA
138A	Overdrive (Stepped) (w/ PTO)	1	03-Up	136140	3C3Z-7B066CB
156A	Pressure Plate w/ One Way Clutch (Coast) (.625" Thick) (59T) (Diesel)	1	03-04	136640	N.L.
156A	Pressure Plate w/ One Way Clutch (Coast) (.665" Thick)	1	05-Up	136640A	5C3Z7A089BA
232B	Intermediate (29T) (.350")	1	05-Up	136144B	N.L.
232B	Intermediate (29T) (.550")	1	05-Up	136144A	N.L.
232B	Intermediate (30T) (.525")	1	03-04	136144	N.L.
250B	Direct (5.120" ID)	1	03-04	136146	3C3Z-7B066AA
322C	Forward (5.120" ID)	1	03-04	136146	3C3Z-7B066AA
322C	Forward (5.375" ID)	1	05-Up	136148	DAF0869B
368C	Pressure Plate w/ One Way Clutch (Low/ Reverse)	1	03-08	136642A	5C3Z-7A089AA
FILTERS					
504E	Screen & Gasket, Solenoid	1	03-Up	136016	3C3Z-7H200AA
526E	Filter	1	03-07	136010	3C3Z-7A098AA
526E	Filter	1	08-Up	136010A	8C3Z-7A098D
FILTER KITS					
N.I.	Filter Kit	1	03-07	136011	N.L.
N.I.	Filter Kit	1	08-Up	13611A	N.L.
BUSHINGS					
N.I.	Bushing Kit	1	03-Up	136030	N.L.
102A	Front Pump	1	03-Up	76034	E9TZ-7B258A
THRUST WASHERS/BEARINGS					
WASHERS					
N.I.	Thrust Washer Kit	1	03-04	136200	N.L.
N.I.	Thrust Washer Kit	1	05-Up	136200A	N.L.
326C	Forward Drum to Hub	1	03-04	36231	C9AZ-7D090A
326C	Forward Drum to Hub	1	05-Up	136231	5C3Z-7D090AA
340C	Lube Dam, Front Planet (4 Tab)	1	05-Up	136699B	5C3Z-7L339BA
340C	Lube Dam, Front Planet (6 Tab)	1	05-Up	136699A	5C3Z-7L339AA
356C	Rear Planet Front & Rear	2	03-08	136251	3C3Z-7A166CA
428D	Case to Park Gear (1 Tab)	1	03-Up	136263	3C3Z-7B368CA
BEARINGS					
N.I.	Bearking Kit	1	03-04	136201	N.L.
N.I.	Bearking Kit	1	05-Up	136201A	N.L.
334C	Forward Planet to Hub	1	03-04	36235CA	F81Z-7A166AA
334C	Forward Planet to Hub	1	05-Up	136235C	5C3Z-7A166AA
338C	Front Planet to Sun Gear / Sun Gear to Rear Hub	2	03-Up	136238	3C3Z-7D234AA
366C	Rear Ring Gear Hub to Case	1	03-Up	136254	3C3Z-7G178AA
428D	Case to Park Gear (w/ Lip)	1	03-Up	136263A	3C3Z-7B368AA
428D	Case to Park Gear (w/o Lip) (Flat)	1	03-Up	136263B	3C3Z-7B368A
ELECTRICAL COMPONENTS					
412D	Sensor, Input (TSS)	1	03-Up	136438	3C3Z-7M101AA
452D	Trans Range Sensor w/ Detent (TRS)	1	03-Up	136410	7C3Z-7H557A
438D	Sensor, Output (VSS)	1	03-Up	136436	3C3Z-7H103AA
510E	Solenoid, EPC	1	03-Up	136431	3C3Z-7G383AB
512E	Solenoid, TCC, Intermediate, Overdrive, Low/ Reverse	4	03-Up	136425	3C3Z-7J136BA
518E	Solenoid, Direct, Coast	2	03-Up	136421	3C3Z-7J136AA
540E	Wire Harness w/ Connector (Internal)	1	03-Up	136446	3C3Z-7G276AA
N.I.	Plug, Fluid Pressure Switch (Contains 5 Plugs & O-Rings)	1	03-Up	136411-6	N.L.
N.I.	Sensor, Fluid Temp	1	03-Up	136437	BC3Z-7H141A
VALVE BODY RECALIBRATION KITS					
N.I.	Shift Kit®, 5R110W (Transgo®)	1	03-Up	T136165	SK® 5R110W
N.I.	Reprogramming Kit™ 5R110W (Transgo®)	1	03-Up	T136169	5R110W-HD2
PUMPS					
120A	Pump (w/ Remote Filter)	1	03-04	136500	N.L.
120A	Pump (w/ Remote Filter)	1	05-Up	136500A	N.L.
120A	Pump (No Remote Filter)	1	L07-Up	136500B	9C3Z-7A103B

ILL.		Qty.	Year	Part #	Ref. #
PUMP COMPONENTS					
N.I.	Valve & Sleeve, TCC Control	1	03-Up	136507C	N.L.
110A	Pump Gears	1	03-Up	136530	N.L.
DRUMS & COMPONENTS					
128A	Piston, Overdrive (Bonded Piston)	1	03-Up	136960	3C3Z-7A262DA
130A	Spring & Retainer Assembly, Overdrive	1	03-Up	136971K	N.L.
146A	Coast Clutch Kit	1	03-06	136559K	3C3Z-7G387AA
146A	Coast Clutch Kit	1	07-Up	136559AK	7C3Z-7G387Z
146A	Coast (w/ Groove in 32T Sun Gear)	1	03-04	136559	N.L.
146A	Coast (w/o Groove in 32T Sun Gear)	1	05-06	136559A	N.L.
146A	Coast (41T Sun Gear)	1	07-Up	136559B	N.L.
148A	Piston, Coast (Bonded Piston)	1	03-Up	136969	3C3Z-7A262CA
150A	Spring & Retainer Assembly, Coast	1	03-Up	136979K	N.L.
202B	Coast Clutch Hub	1	03-Up	136570A	3C3Z7H501BA
224B	Piston, Intermediate (Bonded Piston)	1	03-Up	136962	3C3Z-7E005AA
226B	Spring & Retainer Assembly, Intermediate	1	03-Up	136972K	N.L.
238B	Direct (24T Hub)	1	03-04	136555	3C3Z-7F283AA
238B	Direct (96T Hub)	1	05-Up	136555A	N.L.
240B	Piston, Direct (Bonded Piston)	1	03-Up	136965	3C3Z-7A262BA
242B	Belleville Spring, Direct	1	03-Up	136975	N.L.
244B	Piston, Direct Balance (Bonded Piston)	1	03-Up	136965A	3C3Z-7H359AA
306C	Forward (2.20" Front Ring Gear Hub Bore)	1	03-04	136554	N.L.
306C	Forward (2.40" Front Ring Gear Hub Bore)	1	05-Up	136554A	5C3P-7A511AA
310C	Piston, Forward (Bonded Piston)	1	03-Up	136964	3C3Z-7A262AA
310C	Piston, Forward Balance (Bonded Piston)	1	03-Up	136964A	3C3Z-7H360AA
312C	Belleville Spring, Forward	1	03-Up	136974	5C3Z-7B070AA
316C	Cushion Plate, Forward Clutch (5.120")	1	03-04	136853	3C3Z-7B070BA
316C	Cushion Plate, Forward Clutch (5.375")	1	05-Up	136853A	5C3Z-7B070BA
406D	Spring & Retainer, Low/ Reverse	1	03-Up	136977	3C3Z-7D406AA
408D	Piston, Low/ Reverse (Bonded Piston)	1	03-Up	136967	3C3Z-7D402AB
PLANETS & COMPONENTS					
206B	Overdrive (28T)	1	03-06	136580	3C3Z-7B446AA
206B	Overdrive (29T)	1	07-Up	136580A	N.L.
210B	Ring Gear, Overdrive Planet (94T)	1	03-06	136590	N.L.
210B	Ring Gear, Overdrive Planet (99T)	1	07-Up	136590A	N.L.
330C	Hub, Front Ring Gear (78T)	1	03-04	136602	3C3Z-7B067BA
330C	Hub, Front Ring Gear (101T)	1	05-Up	136602A	5C3Z-7B067B
332C	Ring Gear, Front Planet (78T) (90T Friction)	1	03-04	36592B	F81Z-7D392AA
332C	Ring Gear, Front Planet (101T) (76T Friction)	1	05-Up	136592A	5C3Z-7A392AA
336C	Front (18T Pinion) (6 Tab Washer)	1	03-04	136582	N.L.
336C	Front (23T Pinion) (6 Tab Washer) (Gas)	1	05-Up	136582A	3C3Z-7A398AA
336C	Front (23T Pinion) (4 Tab Washer) (Diesel)	1	05-Up	136582B	N.L.
354C	Rear	1	03-08	136584	3C3Z-7D006AA
354C	Rear (5 Clutch) (Includes Low Diode)	1	09-Up	136584B	9C3Z-7D006B
354C	Rear (6 Clutch) (Includes Low Diode)	1	09-Up	136584BA	93CZ-7D006A
362C	Ring Gear, Rear Planet	1	03-Up	136594	3C3Z-7A153AA
364C	Hub, Rear Ring Gear	1	03-Up	136604	3C3Z-7D164AA
SUN GEARS					
342C	Sun Gear & Shell Kit (42T Sun Gear)	1	03-04	136622K	3C3Z-7A019BA
342C	Sun Gear & Shell Kit (55T Sun Gear)	1	05-08	136622AK	5C3Z-7A019AA
342C	Sun Gear & Shell Kit	1	09-Up	136622BK	N.L.
ONE WAY CLUTCHES					
156A	Pressure Plate w/ One Way Clutch (Coast) (.625" Thick) (59T) (Diesel)	1	03-04	136640	N.L.
156A	Pressure Plate w/ One Way Clutch (Coast) (.665" Thick) (57T) (Gas)	1	05-Up	136640A	5C3Z7A089BA
156A	Pressure Plate w/ One Way Clutch (Coast) (.665" Thick) (59T) (Diesel)	1	07-Up	136640B	7C3Z-7A089A
346C	Pressure Plate w/ One Way Clutch (Low/ Reverse) (Retros All)	1	03-08	136642A	5C3Z-7A089AA
SHELLS & SUPPORTS					
218B	Center Support	1	03-Up	136630	N.L.

ILL.		Qty.	Year	Part #	Ref. #
SHAFTS					
140A	Input	1	03-Up	36670C	F81Z-7017EA
212B	Overdrive (94T)	1	03-06	136675	N.L.
212B	Overdrive (99T)	1	07-Up	136675A	N.L.
434D	Output (2wd)	1	03-Up	136678	N.L.
434D	Output (4wd)	1	03-Up	136678A	N.L.
VALVE BODIES & GOVERNORS					
506E	Valve Body (w/ Solenoids)	1	03-Up	136740-1	N.L.
CASES/HOUSINGS & COMPONENTS					
414D	Case (w/o PTO)	1	03-Up	136760	N.L.
414D	Case (w/ PTO)	1	03-Up	136760A	N.L.
442D	Extension Housing (2wd)	1	03-Up	136770	N.L.
442D	Extension Housing (4wd)	1	03-Up	136770A	N.L.
532E	Pan	1	03-Up	136765	N.L.
MISCELLANEOUS COMPONENTS					
450D	Nut, Output Shaft	1	03-Up	136795	3C3Z-7085BA
454D	Linkage Assembly	1	03-Up	136991	N.L.
N.I.	Snap Ring, Low/ Reverse Waved (Gas)	1	03-Up	136885	N.L.
N.I.	Snap Ring, Low/ Reverse Flat (Diesel)	1	03-Up	136885A	5C3Z7D483E
TECHNICAL MANUALS					
N.I.	Tech Manual	1	03-Up	136400	FORD 5R110W
N.I.	ATRA Rebuild Procedures	1	03-Up	136400A	TORQ-REB
TOOLS					
N.I.	Socket, Output Nut (4 Pin)	1	03-Up	T-9008	N.L.

Notes

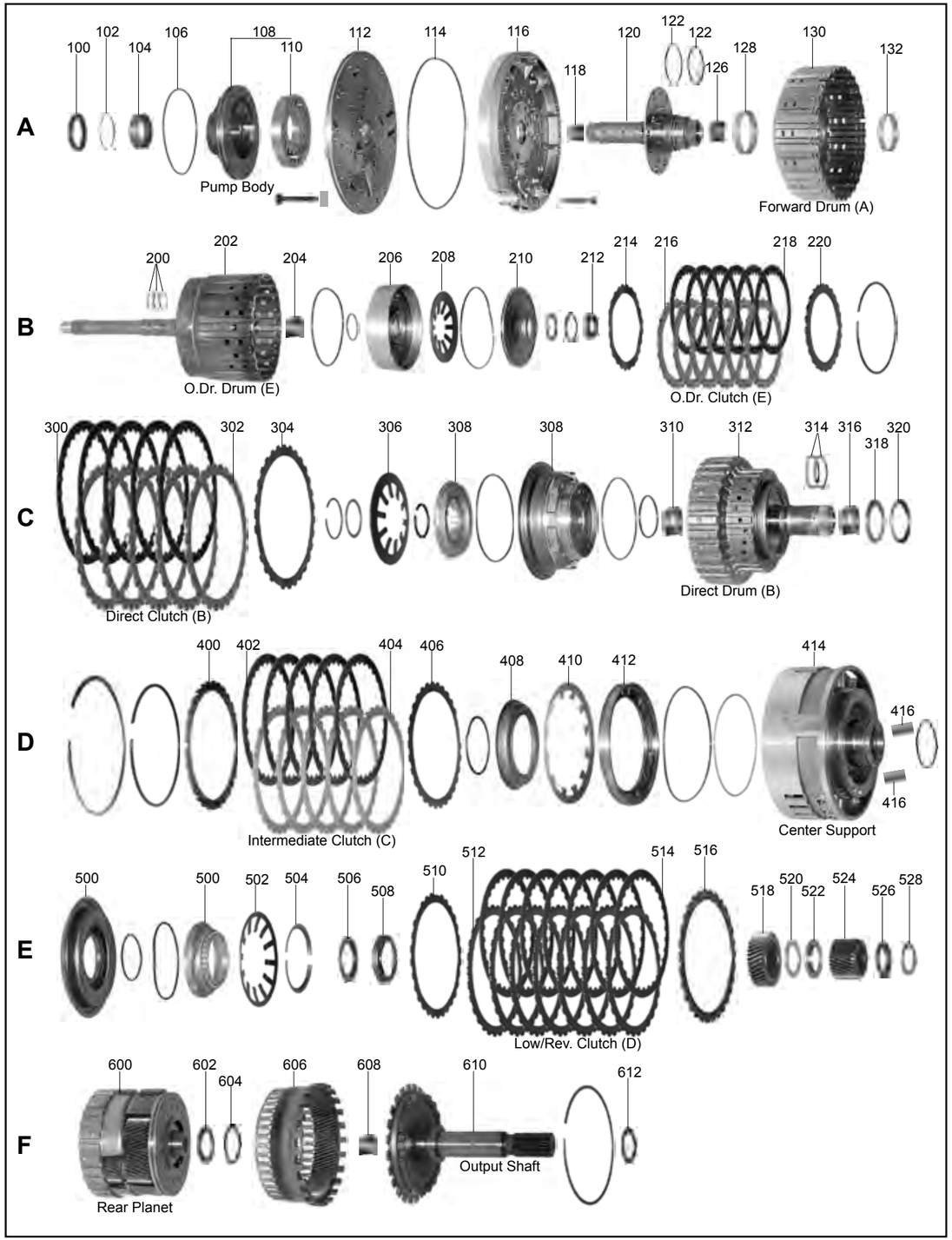
A
100 102 104 106 108 110 112 114 116 118 120 122 122 126 128 130 132
Pump Body
Forward Drum (A)
B
200 202 204 206 208 210 212 214 216 218 220
O.Dr. Drum (E)
O.Dr. Clutch (E)
C
300 302 304 306 308 308 310 312 314 316 318 320
Direct Clutch (B)
Direct Drum (B)
D
400 402 404 406 408 410 412 414 416 416
Intermediate Clutch (C)
Center Support
E
500 500 502 504 506 508 510 512 514 516 518 520 522 524 526 528
Low/Rev. Clutch (D)
F
600 602 604 606 608 610 612
Rear Planet
Output Shaft

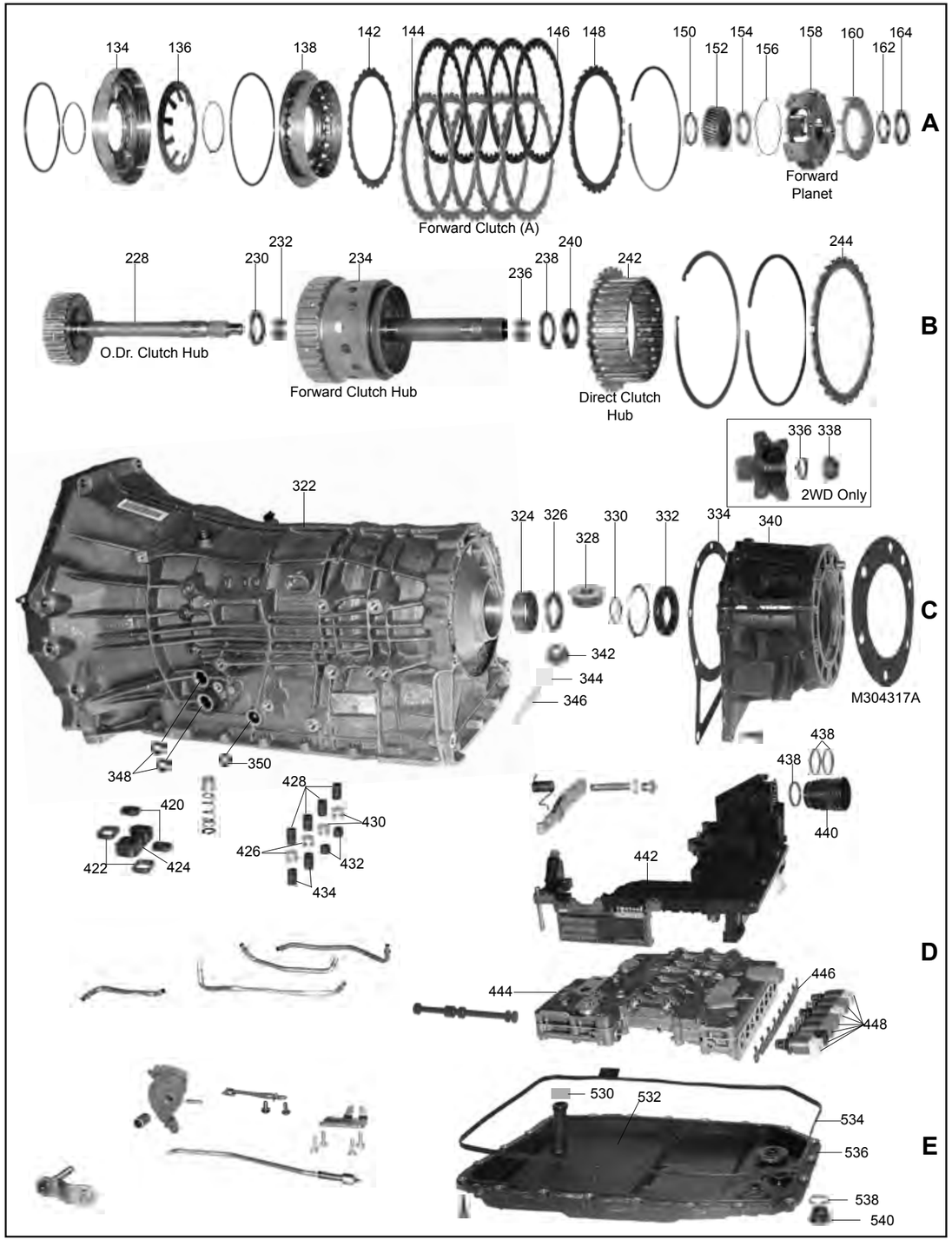
A
134 136 138 142 144 146 148 150 152 154 156 158 160 162 164
Forward Clutch (A)
Forward Planet
B
228 230 232 234 236 238 240 242 244
O.Dr. Clutch Hub
Forward Clutch Hub
Direct Clutch Hub
336 338
2WD Only
C
322 324 326 328 330 332 334 340
342 344 346
M304317A
348 350
D
420 422 424
428 426 430 432 434
438 438 440
442
444 446 448
E
530 532 534 536 538 540

ILL.		Qty.	Year	Part #	Ref. #
MASTER OVERHAUL KITS (WITH STEELS)					
N.I.	ZF6HP26	1	02-Up	49006	N.L.
N.I.	6R60	1	06-Up	49006D	N.L.
N.I.	6R75	1	07-08	49006DA	N.L.
N.I.	6R80	1	09-Up	49006E	N.L.
MASTER OVERHAUL KITS (LESS STEELS)					
N.I.	ZF6HP26	1	02-Up	49004	N.L.
N.I.	6R60	1	06-Up	49004D	N.L.
N.I.	6R75	1	07-08	49004DA	N.L.
N.I.	6R80	1	09-Up	49004E	N.L.
OVERHAUL KITS (WITH RINGS AND SEALS)					
N.I.	ZF6HP26	1	02-Up	49002	N.L.
N.I.	6R60	1	06-Up	49002D	N.L.
N.I.	6R75	1	07-08	49002D	N.L.
N.I.	6R80	1	09-Up	49002E	N.L.
GASKETS & O-RINGS					
534E	Pan Gasket, Molded Rubber (ZF6HP26) (For Plastic Pan)	1	02-Up	49300	501323155
534E	Pan Gasket, Fiber (ZF6HP26X) (For Metal Pan)	1	04-Up	49300B	N.L.
534E	Pan Gasket, Bonded (6R60/75/80)	1	06-Up	49300D	N.L.
METAL CLAD SEALS					
100A	Front Pump	1	02-Up	49070	N.L.
332C	Rear (2wd) (Except 6R80)	1	02-Up	49074	N.L.
332C	Rear (4wd) (Except 6R80)	1	02-Up	49074D	N.L.
350C	Linkage	1	02-Up	49072	N.L.
SEALING RINGS & KITS					
N.I.	Sealing Ring Kit (All)	1	02-Up	49175K	N.L.
FRICTION PLATES					
146A	Forward (A Clutch) (.063")	4-5	02-Up	49108	N.L.
218B	Overdrive (E Clutch) (.063") (Exc 6R80)	6-7	02-Up	49100	N.L.
218B	Overdrive (E Clutch) (.079") (6R80)	6	09-Up	49100A	N.L.
300C	Direct (B Clutch) (.083")	4-5	02-Up	49106	N.L.
402D	Intermediate (C Clutch) (.083")	4-5	02-Up	49106	N.L.
514E	Low/ Reverse (D Clutch) (.063")	4-7	02-Up	49108	N.L.
STEEL PLATES					
144A	Forward (A Clutch) (.118")	4-5	02-Up	49128	N.L.
216B	Overdrive (E Clutch)	5-6	02-Up	49120	N.L.
302C	Direct (B Clutch) (.083")	4-5	02-Up	49126	N.L.
404D	Intermediate (C Clutch) (.118")	4-5	02-Up	49128	N.L.
512E	Low/ Reverse (D Clutch (.083")	4-7	02-Up	49126	N.L.
PRESSURE PLATES					
220B	Overdrive (E Clutch)	1	02-Up	49140	N.L.
244B	Direct (B Clutch)	1	02-Up	49146	N.L.
400D	Intermediate (C Clutch)	1	02-Up	49144	N.L.
516E	Low/ Reverse (D Clutch)	1	02-Up	49126	N.L.
FILTERS					
532E	ZF6HP26 (Integral w/ Plastic Pan)	1	02-Up	49010	501216243
532E	ZF6HP26X (w/ Metal Pan)	1	04-Up	49010D	6L2Z-7A098AA
532E	6R60, 6R75 (Flat Bottom) (to 12/4/06)	1	02-E06	49010D	6L2Z-7A098AA
532E	6R60, 6R75, 6R80 (1.5" Pick Up) (12/4/06-Up)	1	L06-Up	49010E	7L1Z-7A098A
BUSHINGS					
N.I.	Bushing Kit, ZF6HP26	1	02-Up	49030	N.L.
N.I.	Bushing Kit, 6R60, 6R75, 6R80	1	06-Up	49030D	N.L.

ILL.		Qty.	Year	Part #	Ref. #
THRUST WASHERS/BEARINGS					
BEARINGS					
N.I.	Bearing Kit (ZF6HP26)	1	02-Up	49201	N.L.
N.I.	Bearing Kit (6R60)	1	06-08	49201D	N.L.
N.I.	Bearing Kit (6R60, 6R75, 6R80)	1	08-Up	49201E	N.L.
ELECTRICAL COMPONENTS					
440D	Sleeve, Case Connector	1	02-Up	49444	6L2Z-7G276AA
N.I.	Solenoid, Black Connector (6L2P) (SSB, SSD, PCA)	3	06-10	49430	N.L.
N.I.	Solenoid, Yellow Connector (AL3P) (SSB, SSD, PCA) (Black Barrel)	3	10-Up	49430B	N.L.
N.I.	Solenoid, Brown Connector (6L2P) (SSA, SSC, TCC)	3	06-10	49432	N.L.
N.I.	Solenoid, Yellow Connector (AL3P) (SSA, SSC, TCC) (Brown Barrel)	3	10-Up	49432B	N.L.
N.I.	Solenoid, Yellow Connector (6L2P) (SSE)	1	06-Up	49435	N.L.
N.I.	Connector Plate w/o TCM (Siemens) (A2C5-3215084)	1	10-Up	49446B	N.L.
N.I.	Solenoid, Yellow Connector (0501-213-960) (EDS, #1, #3, #6)	3	02-Up	49430D	N.L.
N.I.	Solenoid, Blue Connector (0501-213-959) (EDS, #2, #4, #5)	3	02-Up	49432D	N.L.
N.I.	Solenoid, Black Connector (0501-319-037) (MV1)	1	02-Up	49435D	N.L.
PUMPS					
N.I.	Pump (w/ Stator Bushing, .550" Pump Gears) (6R60, 6R75)	1	06-Up	49500	N.L.
N.I.	Pump (No Stator Bushing, .590" Pump Gears) (6R80)	1	09-Up	49500A	N.L.
PUMP COMPONENTS					
108A	Pump Body w/ Gears (.550" Pump Gears) (6R60, 6R75)	1	06-Up	49510	N.L.
108A	Pump Body w/ Gears (.590" Pump Gears) (6R80)	1	09-Up	49510A	N.L.
110A	Pump Gears (.550") (6R60, 6R75)	1	06-Up	49530	N.L.
110A	Pump Gears (.590") (6R80)	1	09-Up	49530A	N.L.
116A	Pump Cover	1	06-Up	49515	N.L.
120A	Pump Stator (w/ Stator Bushing) (6R60, 6R75)	1	06-Up	49520	N.L.
120A	Pump Stator (No Stator Bushing) (6R80)	1	09-Up	49520A	N.L.
DRUMS & COMPONENTS					
130A	Forward (A Clutch)	1	06-Up	49554	N.L.
134A	Piston, Forward (A clutch) (6R60, 6R75)	1	06-Up	49964	N.L.
134A	Piston, Forward (A clutch) (6R80)	1	09-Up	49964A	N.L.
136A	Belleville Spring, Forward (A Clutch)	1	02-Up	49974	N.L.
138A	Retainer, Forward (A clutch) (3 Slots) (6R60)	1	06-Up	49984	N.L.
138A	Retainer, Forward (A clutch) (4 Slots, Wide) (6R75)	1	07-08	49984A	N.L.
138A	Retainer, Forward (A clutch) (4 Slots, Narrow) (6R80)	1	09-Up	49984B	N.L.
202B	Input (E Clutch) (2 Rings, Small Diameter Shaft) (6R60, 6R75)	1	06-Up	49550	N.L.
202B	Input (E Clutch) (3 Rings, Large Diameter Shaft) (6R80)	1	09-Up	49550A	N.L.
208B	Belleville Spring, Overdrive (E Clutch)	1	02-Up	49970	N.L.
228B	Hub, Overdrive w/ Shaft (Stamped) (6R60)	1	06-Up	49570	N.L.
228B	Hub, Overdrive w/ Shaft (Forged) (6R75, 6R80)	1	09-Up	49570A	N.L.
234B	Hub Forward w/ Shaft (A Clutch)	1	06-Up	49574	N.L.
242B	Hub, Direct	1	02-Up	49575	N.L.
306C	Belleville Spring, Direct (B Clutch) (6R60, 6R75)	1	02-Up	49975	N.L.
306C	Belleville Spring, Direct (B Clutch) (6R80)	1	09-Up	49975A	N.L.
308C	Piston, Direct (B Clutch) (6R60, 6R75)	1	06-Up	49965	N.L.
308C	Piston, Direct (B Clutch) (6R80)	1	09-Up	49965A	N.L.
312C	Direct (B Clutch)	1	06-Up	49555	N.L.
410D	Belleville Spring, Intermediate (C Clutch)	1	02-Up	49972	N.L.
412D	Piston, Intermediate (C Clutch) (4 Clutch Type) (6R60)	1	06-Up	49962	N.L.
412D	Piston, Intermediate (C Clutch) (5 Clutch Type) (6R75, 6R80)	1	07-Up	49962A	N.L.
500E	Piston, Low/ Reverse (D Clutch) (.860" Thick) (6R60)	1	06-Up	49967	N.L.
500E	Piston, Low/ Reverse (D Clutch) (.625" Thick) (6R75)	1	07-Up	49967A	D
500E	Piston, Low/ Reverse (D Clutch) (.715" Thick) (6R80)	1	09-Up	49967B	N.L.
500E	Piston, Low/Reverse (D Clutch) (Diode Design)	1	11-Up	49670	N.L.
502E	Belleville Spring, Low/ Reverse (D Clutch)	1	02-Up	49977	N.L.
502E	Belleville Spring, Low/ Reverse (D Clutch) (Diode Design)	1	11-Up	49977A	N.L.
N.I.	Retainer, Low/Reverse (D Clutch) (Diode Design)	1	11-Up	49987A	N.L.

ILL.		Qty.	Year	Part #	Ref. #
PLANETS & COMPONENTS					
158A	Front (3 Gear) (6R60)	1	06-Up	49582	N.L.
158A	Front (4 Gear) (6R75) (Cast Carrier)	1	06-Up	49582A	N.L.
158A	Front (4 Gear) (6R80) (Stamped Carrier)	1	09-Up	49582B	N.L.
600F	Rear (4 Clutch) (6R60)	1	06-Up	49584	N.L.
600F	Rear (6 Clutch) (6R75, 6R80)	1	06-Up	49584A	N.L.
SUN GEARS					
152A	Sun Gear, Front Planet (38T)	1	06-Up	49612	N.L.
518E	Sun Gear, Rear Planet (Front Position) (37T)	1	06-Up	49611	N.L.
524E	Sun Gear, Rear Planet (Rear Position) (31T, 1.590" Thick)	1	06-E07	49614	N.L.
524E	Sun Gear, Rear Planet (Rear Position) (31T, 1.560" Thick)	1	L07-Up	49614A	N.L.
SHELLS & SUPPORTS					
414D	Center Support (w/ Check Ball & No Air Bleed)	1	06-Up	49630	N.L.
414D	Center Support (w/ Check Ball & Air Bleed)	1	06-Up	49630A	N.L.
414D	Center Support (Diode Design)	1	11-Up	49630B	N.L.
SHAFTS					
610F	Output Shaft (2wd) (6R60, 6R75) (7.880" Long)	1	06-Up	49678	N.L.
610F	Output Shaft (2wd) (6R80)	1	09-Up	49678B	N.L.
610F	Output Shaft (4wd) (6R60, 6R75) (5.440" Long)	1	06-Up	49678A	N.L.
610F	Output Shaft (4wd) (6R80)	1	09-Up	49678BA	N.L.
VALVE BODIES & GOVERNORS					
444D	Valve Body (6R60, 6R75)	1	06-Up	49740	N.L.
444D	Valve Body (6R80)	1	09-Up	49740B	N.L.
444D	Valve Body (Diode Design)	1	11-Up	49740C	N.L.
CASES/HOUSINGS & COMPONENTS					
322C	Case (2wd) (6R60, 6R75) (Exc 5.4L Navigator)	1	06-Up	49760	N.L.
322C	Case (2wd) (6R80)	1	09-Up	49760B	N.L.
322C	Case (4wd) (6R60, 6R75)	1	06-Up	49760AA	N.L.
322C	Case (4wd) (6R80)	1	09-Up	49760BA	N.L.
340C	Extension Housing (4wd) (6R60, 6R75)	1	06-Up	49770	N.L.
340C	Extension Housing (4wd) (6R80)	1	09-Up	49770A	N.L.
536E	Pan (ZF6HP26) (Integral w/ Filter)	1	02-Up	49010	501216243
536E	Pan (4wd Metal) (6R60, 6R75)	1	06-Up	49765	N.L.
536E	Pan (4wd Metal) (6R80)	1	09-Up	49765A	N.L.
MISCELLANEOUS COMPONENTS					
160A	Lube Dam (3 Gear Planet)	1	02-Up	49699	N.L.
160A	Lube Dam (4 Gear Planet)	1	07-Up	49699A	N.L.
N.I.	End Plug Kit w/ O-Ring (Sonnax)	1	06-Up	49741A-6	N.L.
N.I.	End Plug Kit w/ O-Ring (Superior)	1	06-Up	49741A-6	N.L.
TECHNICAL MANUALS					
N.I.	ZF6HP26	1	02-Up	49400	N.L.
N.I.	6R60	1	06-Up	49400D	N.L.

Notes

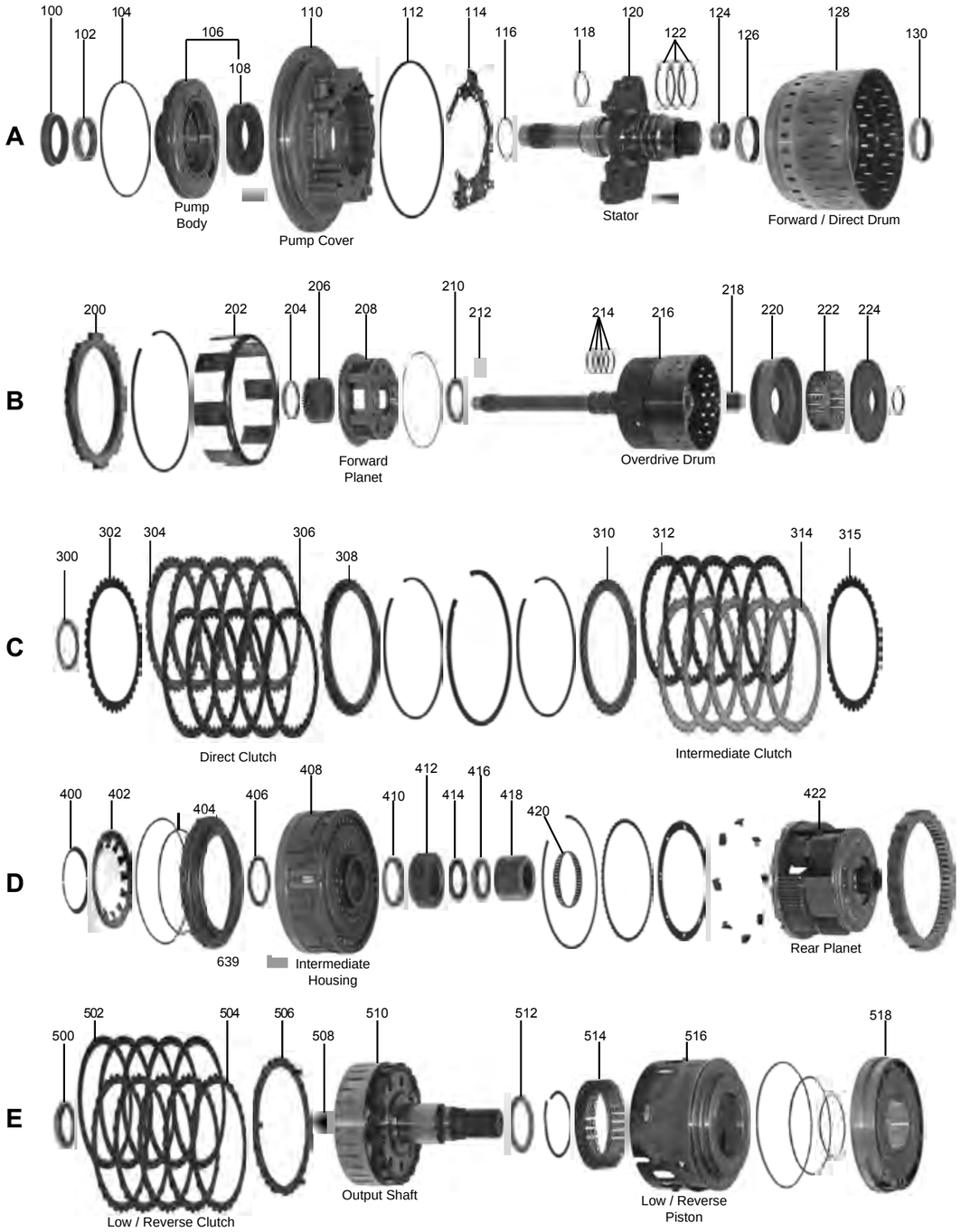
A
100
102
104
106
108
110
112
114
116
118
120
122
124
126
128
130
Pump Body
Pump Cover
Stator
Forward / Direct Drum
B
200
202
204
206
208
210
212
214
216
218
220
222
224
Forward Planet
Overdrive Drum
C
300
302
304
306
308
310
312
314
315
Direct Clutch
Intermediate Clutch
D
400
402
404
406
408
410
412
414
416
418
420
422
639
Intermediate Housing
Rear Planet
E
500
502
504
506
508
510
512
514
516
518
Low / Reverse Clutch
Output Shaft
Low / Reverse Piston

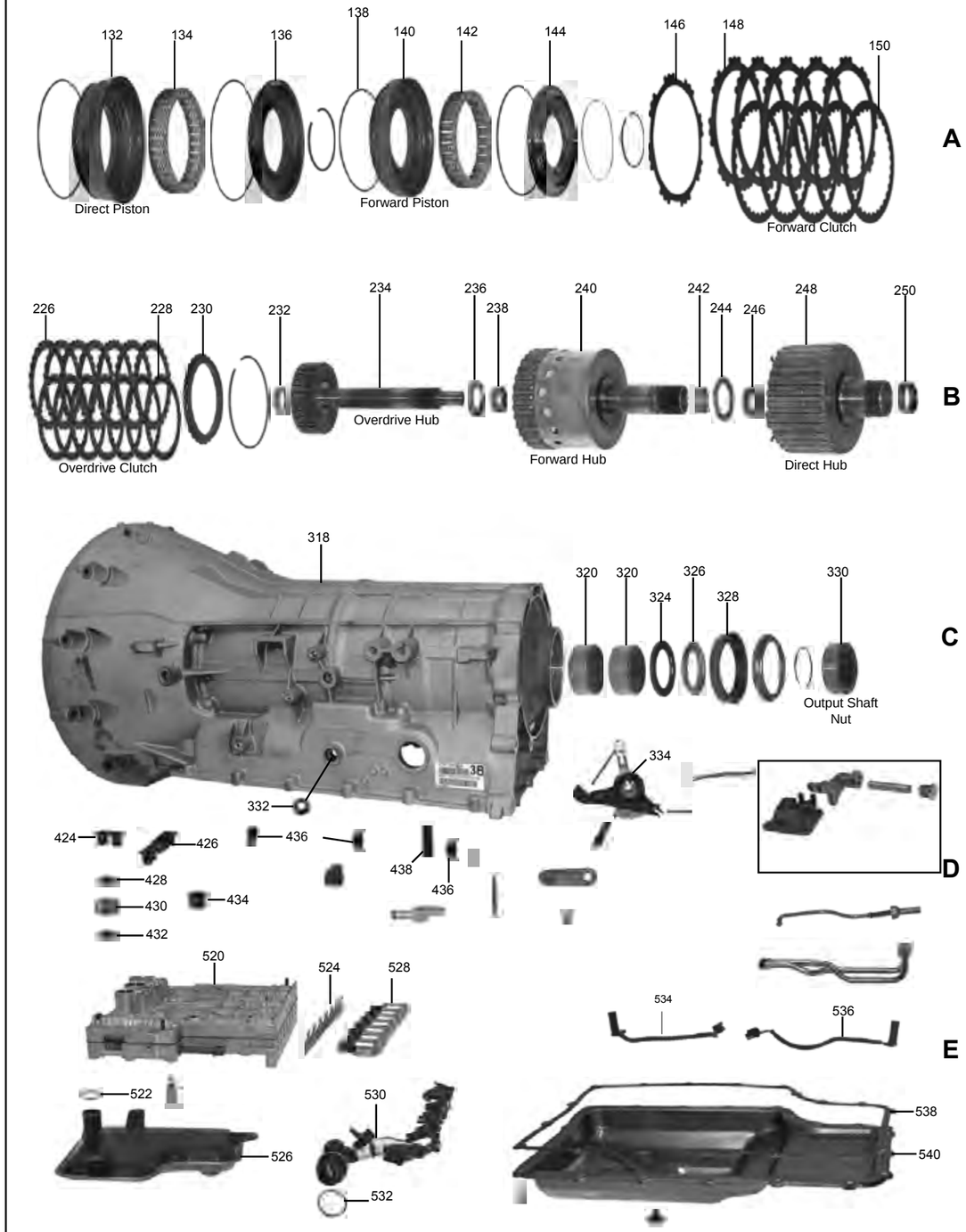
A
132
134
136
138
140
142
144
146
148
150
Direct Piston
Forward Piston
Forward Clutch
B
226
228
230
232
234
236
238
240
242
244
246
248
250
Overdrive Clutch
Overdrive Hub
Forward Hub
Direct Hub
C
318
320
320
324
326
328
330
332
Output Shaft Nut
D
334
424
426
428
430
432
434
436
436
438
E
520
522
524
526
528
530
532
534
536
538
540

ILL.		Qty.	Year	Part #	Ref. #
MASTER OVERHAUL KITS (WITH STEELS)					
N.I.	6R140	1	11-Up	236006	N.L.
MASTER OVERHAUL KITS (LESS STEELS)					
N.I.	6R140	1	11-Up	236004	N.L.
OVERHAUL KITS (WITH RINGS AND SEALS)					
N.I.	6R140	1	11-Up	236002	N.L.
BONDED PISTONS					
220B	Piston, Overdrive (Bonded)	1	11-Up	236960	N.L.
224B	Retainer, Overdrive Balance (Bonded)	1	11-Up	236980	N.L.
GASKETS & O-RINGS					
104A	O-Ring, Pump Body	1	11-Up	236311A	N.L.
112A	O-Ring, Pump Cover	1	11-Up	236311B	N.L.
532E	O-Ring, Case Connector	1	11-Up	236347	N.L.
538E	Pan Gasket	1	11-Up	236300	N.L.
N.I.	O-Ring, Extension Housing	1	11-Up	236348	N.L.
METAL CLAD SEALS					
100A	Front Pump	1	11-Up	236070	N.L.
328C	Extension Housing	1	11-Up	236074	N.L.
332C	Manual Lever	1	11-Up	236072	N.L.
N.I.	Case	1	11-Up	236080	N.L.
SEALING RINGS & KITS					
N.I.	Sealing Ring Kit	1	11-Up	236175K	N.L.
FRICTION PLATES					
150A	Forward	5	11-Up	236108	N.L.
228B	Overdrive	7	11-Up	236100	N.L.
306C	Direct	4-5	11-Up	236106	N.L.
312C	Intermediate	6	11-Up	236104	N.L.
502E	Low/ Reverse	5	11-Up	236114	N.L.
STEEL PLATES					
148A	Forward	5	11-Up	236128	N.L.
226B	Overdrive	7	11-Up	236120	N.L.
304C	Direct	4-5	11-Up	236126	N.L.
314C	Intermediate	6	11-Up	236124	N.L.
504E	Low/ Reverse	4	11-Up	236134	N.L.
PRESSURE PLATES					
200B	Forward	1	11-Up	236148	N.L.
230B	Overdrive	1	11-Up	236140	N.L.
308C	Direct (Thick)	1	11-Up	236146	N.L.
308C	Direct (Thin)	1	11-Up	236146A	N.L.
310C	Intermediate	1	11-Up	236144	N.L.
506E	Low/ Reverse (Apply)	1	11-Up	236154	N.L.
FILTERS					
526E	Main	1	11-Up	236010	N.L.
FILTER KIT					
N.I.	Filter Kit	1	11-Up	236011	N.L.
BUSHINGS					
N.I.	Bushing Kit	1	11-Up	236030	N.L.
102A	Pump Bearing	1	11-Up	236209	N.L.
124A	Stator (Rear)	1	11-Up	236037	N.L.
126A	Direct Drum (Front)	1	11-Up	236046	N.L.
130A	Direct Drum (Rear)	1	11-Up	236046A	N.L.
218B	Input (Rear)	1	11-Up	236047	N.L.
238B	Forward Hub	2	11-Up	236050	N.L.

ILL.		Qty.	Year	Part #	Ref. #
BUSHINGS (Cont.)					
246B	Direct Hub	2	11-Up	236054	N.L.
508E	Output	1	11-Up	236062	N.L.
N.I.	Extension Housing	1	11-Up	236066	N.L.
THRUST WASHERS/BEARINGS					
WASHERS					
N.I.	Thrust Washer Kit	1	11-Up	236200	N.L.
BEARINGS					
N.I.	Bearing Kit	1	11-Up	236201	N.L.
210B	Planet to Drum	1	11-Up	236241	N.L.
232B	Overdrive Drum to Hub	1	11-Up	236214	N.L.
236B	Overdrive Hub to Front Hub	1	11-Up	236234	N.L.
244B	Forward to Direct Hub	1	11-Up	236235	N.L.
300C	Direct Hub (Rear)	1	11-Up	236229	N.L.
324C	Case Rear Race	1	11-Up	236270	N.L.
326C	Case Rear Bearing	1	11-Up	236271	N.L.
406D	Center Support to Sun Brg	1	11-Up	236227	N.L.
410D	Center Support to Sun Race	AR	11-Up	236226	N.L.
414D	Sun to Sun Race	1	11-Up	236250	N.L.
416D	Sun to Sun Bearing	1	11-Up	236249	N.L.
500E	Planet to Output	1	11-Up	236251	N.L.
512E	Output Rear Bearing	1	11-Up	236271	N.L.
N.I.	Front Sun to Planet	1	11-Up	236240	N.L.
N.I.	Rear Sun to Planet	1	11-Up	236247	N.L.
N.I.	PTO Gear (Rear)	1	11-Up	236299	N.L.
ELECTRICAL COMPONENTS					
334C	Switch (DTR)	1	11-Up	236410	N.L.
530E	Harness w/ Connector	1	11-Up	236445	N.L.
534E	Sensor (TSS)	1	11-Up	236438	N.L.
536E	Sensor (OSS)	1	11-Up	236436	N.L.
N.I.	Solenoid (Tan)	4	11-Up	236421	N.L.
N.I.	Solenoid (Black)	3	11-Up	236422	N.L.
PUMPS					
N.I.	Pump Assembly (Non PTO)	1	11-Up	236500	N.L.
N.I.	Pump Assembly (PTO) (w/ PTO Gear Assembly)	1	11-Up	236500A	N.L.
PUMP COMPONENTS					
106A	Pump Body	1	11-Up	236510	N.L.
108A	Pump Gears (28T, 38T)	1	11-Up	236530	N.L.
110A	Pump Cover (Non PTO)	1	11-Up	236520	N.L.
110A	Pump Cover (PTO)	1	11-Up	236520A	N.L.
114A	Pump Plate	1	11-Up	236544	N.L.
DRUMS & COMPONENTS					
128A	Drum, Forward / Direct (4 Clutch)	1	11-Up	236555	N.L.
128A	Drum, Forward / Direct (5 Clutch)	1	11-Up	236555A	N.L.
132A	Piston, Direct	1	11-Up	236965	N.L.
134A	Return Spring, Direct	1	11-Up	236975	N.L.
136A	Retainer, Direct	1	11-Up	236985	N.L.
140A	Piston, Forward	1	11-Up	236964	N.L.
142A	Return Spring, Forward	1	11-Up	236975	N.L.
144A	Retainer, Forward	1	11-Up	236983	N.L.
146A	Cushion, Forward	1	11-Up	236851	N.L.
202B	Apply Ring, Direct	1	11-Up	236548	N.L.
216B	Drum, Overdrive w/ Shaft	1	11-Up	236550	N.L.
220B	Piston, Overdrive (Bonded)	1	11-Up	236960	N.L.
222B	Return Spring, Overdrive	1	11-Up	236970	N.L.
224B	Retainer, Overdrive Balance (Bonded)	1	11-Up	236980	N.L.
234B	Hub, Overdrive	1	11-Up	236570	N.L.
240B	Hub, Forward	1	11-Up	236574	N.L.
248B	Hub, Direct	1	11-Up	236575	N.L.
302C	Cushion, Direct	1	11-Up	236853	N.L.

ILL.		Qty.	Year	Part #	Ref. #
DRUMS & COMPONENTS (Cont.)					
315C	Cushion, Intermediate	1	11-Up	236852	N.L.
402D	Return Spring, Intermediate	1	11-Up	236972	N.L.
404D	Piston, Intermediate	1	11-Up	236962	N.L.
514E	Return Spring, Low/ Reverse	1	11-Up	236977	N.L.
516E	Piston, Low/ Reverse	1	11-Up	236967	N.L.
PLANETS & COMPONENTS					
208B	Front, 4 Gear (Gas)	1	11-Up	236582	N.L.
208B	Front, 5 Gear (Diesel)	1	11-Up	236582A	N.L.
442D	Rear, 6 Gear w/ Diode	1	11-Up	236584	N.L.
SUN GEARS					
206B	Front	1	11-Up	236612	N.L.
412D	Rear (37T) (Forward)	1	11-Up	236614	N.L.
418D	Rear (47T) (Reaction)	1	11-Up	236616	N.L.
SHELLS & SUPPORTS					
408D	Intermediate	1	11-Up	236630	N.L.
518E	Low / Reverse	1	11-Up	236634	N.L.
SHAFTS					
510E	Output Shaft (2wd)	1	11-Up	236678A	N.L.
510E	Output Shaft (4wd)	1	11-Up	236678B	N.L.
VALVE BODIES & GOVERNORS					
520E	Valve Body	1	11-Up	236740	N.L.
CASES/HOUSINGS & COMPONENTS					
318C	Case (2wd Diesel) (Fixed Flange)	1	11-Up	23660A	N.L.
318C	Case (2wd Diesel) (Slip Yoke) (w/ PTO)	1	11-Up	236760AA	N.L.
318C	Case (4wd Diesel) (Slip Yoke)	1	11-Up	236760BA	N.L.
318C	Case (4wd Diesel) (Fixed Flange) (w/ PTO)	1	11-Up	236760BB	N.L.
540E	Pan (Lower) 2wd	1	11-Up	236765	N.L.
540E	Pan (Lower) 4wd	1	11-Up	236765A	N.L.
N.I.	Extension Housing (Slip Yoke)	1	11-Up	236770	N.L.
MISCELLANEOUS COMPONENTS					
330C	Nut, Output (2wd)	1	11-Up	236795	N.L.
330C	Nut, Output (4wd)	1	11-Up	236795A	N.L.
N.I.	Drive Gear, PTO	1	11-Up	236825	N.L.
TECHNICAL MANUALS					
N.I.	6R140	1	11-Up	236400	N.L.
TOOLS					
N.I.	Tool, Snap Ring Pliers (Center Support)	1	11-Up	T-6800	N.L.

ILL.		Qty.	Year	Part #	Ref. #
DELUXE KITS (SUPER KITS WITH STEELS)					
N.I.	A4LD (2WD)	1	86-89	56008E	N.L.
N.I.	A4LD (2WD)	1	90-95	56008G	N.L.
N.I.	A4LD (4WD)	1	86-89	56008EB	N.L.
N.I.	A4LD (4WD)	1	90-95	56008GB	N.L.
MASTER OVERHAUL KITS (WITH STEELS)					
N.I.	A4LD	1	85-89	56006E	N.L.
N.I.	A4LD	1	90-95	56006G	N.L.
N.I.	C3	1	74-77	56006	N.L.
N.I.	C3	1	78-87	56006A	N.L.
MASTER OVERHAUL KITS (LESS STEELS)					
N.I.	A4LD	1	85-89	56004E	N.L.
N.I.	A4LD	1	90-95	56004G	N.L.
N.I.	C3	1	74-77	56004A	N.L.
OVERHAUL KITS (WITH RINGS AND SEALS)					
N.I.	A4LD Combo	1	86-95	56002E	N.L.
N.I.	C3	1	74-87	56002	N.L.
GASKETS & O-RINGS					
N.I.	Gasket, Pump Bolt	8	85-95	56309	E830124S
N.I.	Gasket, Pump	1	85-95	56310	F5TZ-7A136A
N.I.	O-Ring, Front Pump	1	85-95	56311	D5ZZ-7A248A
N.I.	O-Ring, Overdrive Servo Cover	1	86-95	56362A	E6TZ-7D040A
N.I.	O-Ring, Intermediate Servo Cover	1	86-95	56362A	E6TZ-7D040A
N.I.	Gasket, Extension Housing	1	85-95	56305	D4ZZ-7086B
N.I.	O-Ring, Filter O-Ring (Small)	1	86-95	56379A	E6TZ-7A469B
N.I.	O-Ring, Filter O-Ring (Large)	1	86-95	56379LA	E6TZ-7A469A
N.I.	O-Ring, Throttle Shaft	1	85-95	36349	386078-S
N.I.	Gasket, Reverse Servo Cover	1	85-95	56307	D4ZZ-7L173A
N.I.	Gasket, Valve Body (Upper)	1	85-95	56320A	E8RY-7C155A
N.I.	Gasket, Valve Body (Lower)	1	85-95	56321AA	E8RY-7D100A
N.I.	Gasket, Pan C3	1	74-77	56300	N.L.
N.I.	Gasket, Pan A4LD	1	85-95	56300E	E5TZ-7A191A
N.I.	O-Ring, Pump Bolt	8	85-95	56312	E804595-S200
N.I.	O-Ring, Filler Tube	1	85-95	44371A	6030608
N.I.	External Seal Kit	1	85-95	56390E	K76900-2
METAL CLAD SEALS					
N.I.	Front Pump (All)	1	74-95	56070A	E5TZ-7A248A
N.I.	Rear (w/o Boot) (All)	1	74-95	56074	D5ZZ-7052A
N.I.	Rear (w/ Boot) (All)	1	74-95	56074B	E2ZZ-7052A
N.I.	Linkage (All)	1	74-95	36072	C7AZ-7B498A
SEALING RINGS & KITS					
N.I.	Ring Kit, A4LD (w/ Metal Governor Rings)	1	85-95	56175EK	N.L.
N.I.	Ring Kit, A4LD (w/ Viton Governor Rings)	1	85-95	56175GK	N.L.
FRICTION PLATES					
N.I.	Overdrive (.078") (32T)	2-3	85-89	56100	84GT7B164B1A
N.I.	Overdrive (.069") (16T)	3	90-95	56100A	90GT7B164BA
N.I.	Direct (.075")	4-5	85-89	56106	83DT7B164B1A
N.I.	Direct (.069")	6	90-95	56106A	90DT7B164BA
N.I.	Forward (.075")	4-5	85-89	56108	83DT7B164A1A
N.I.	Forward (.069")	4-6	85-95	56108A	90DT7B164AA
STEEL PLATES					
N.I.	Overdrive (.068")	3	85-89	56120A	D8ZZ-7B442B
N.I.	Overdrive (.065")	3	90-95	56120B	F0TZ-7B442B
N.I.	Direct (.068")	4-6	85-89	56120A	D8ZZ-7B442B
N.I.	Direct (.065")	6	90-95	56120B	F0TZ-7B442B
N.I.	Direct (.098") (Oversized)	AR	85-95	56120X	N.L.
N.I.	Forward (.068")	4-5	85-89	56128A	D8ZZ-7B442A
N.I.	Forward (.065")	6	90-95	56128C	F0TZ-7B442A

ILL.		Qty.	Year	Part #	Ref. #
STEEL PLATES (Cont.)					
N.I.	Forward (.098") (Oversized)	AR	85-95	56128X	N.L.
N.I.	Steel Module, A4LD	1	85-89	56139E	N.L.
N.I.	Steel Module, A4LD	1	90-95	56139G	N.L.
PRESSURE PLATES					
N.I.	Overdrive (.200")	2	90-95	56140B	F0TZ-7B066B
N.I.	Direct (.200")	2	90-95	56140B	F0TZ-7B066B
N.I.	Forward (.215")	1	85-89	56148	D4ZZ-7B066A
N.I.	Forward (.200") (19T)	1	90-95	56148D	F0TZ-7B066A
FILTERS					
N.I.	A4LD (2WD) (Felt) (All Metal)	1	86-88	56010E	85GT7A098AD
N.I.	A4LD (2WD) (Screen) (All Metal)	1	86-88	A56010E	84GT7A098AD
N.I.	A4LD (2WD) (Felt) (Metal & Plastic)	1	89-95	56010H	XL2Z-7A098CA
N.I.	A4LD (2WD) (Screen (All Metal)	1	89-95	56010GA	87GT7A098AA
N.I.	A4LD (4WD) (Felt) (Metal & Plastic)	1	86-95	56010G	XL2Z-7A098DA
N.I.	A4LD (4WD) (Screen) (All Metal)	1	86-95	56010GB	N.L.
N.I.	C3	1	74-87	56010	N.L.
FILTER KITS					
N.I.	A4LD (2WD)	1	86-88	56011E	N.L.
N.I.	A4LD (2WD) (Felt) (Metal & Plastic)	1	89-95	56011H	N.L.
N.I.	A4LD (2WD) (Screen) (All Metal)	1	89-95	56011GA	N.L.
N.I.	A4LD (4WD) (Felt) (Metal & Plastic)	1	86-95	56011G	N.L.
N.I.	A4LD (4WD) (Screen) (All Metal)	1	86-95	56011GB	N.L.
N.I.	C3	1	74-87	56011	N.L.
BANDS					
N.I.	Intermediate (Single Wrap) All	1	74-95	56022E	74DT-7B034AA
N.I.	Intermediate (Single Wrap) (Hi-Energy)	1	85-95	46022	1L4P-7D034AA
N.I.	Intermediate (Double Wrap)	1	91-92	56022EA	90GT-7F196AA
N.I.	Overdrive (Single Wrap)	1	85-95	56022E	74DT-7B034AA
N.I.	Overdrive (Single Wrap) (Hi-Energy)	1	85-95	46022	1L4P-7D034AA
N.I.	Reverse (All)	1	74-95	56024	E3ZZ-7D095A
BUSHINGS					
N.I.	Bushing Kit, A4LD (includes 36038 & 56062)	1	85-95	56030E	N.L.
N.I.	Bushing Kit, A4LD (does not include 36038 & 56062)	1	90-95	56030D	N.L.
N.I.	Bushing Kit, C3	1	74-77	56030	N.L.
N.I.	Conveter Housing (Babbitt) (All)	1	74-95	56034	D4TP-7A834AB
N.I.	Conveter Housing (Bronze) (All)	1	74-95	56034B	D4TP-7A834AB
THRUST WASHERS/BEARINGS					
WASHERS					
N.I.	Washer Kit, C3	1	74-87	56200	N.L.
N.I.	Washer Kit, A4LD	1	85-90	56200E	N.L.
N.I.	Washer Kit, A4LD	1	91-95	56200EA	N.L.
N.I.	Shim Kit, Pump/ Center Support	1	85-95	56210K	N.L.
N.I.	Pump/ Center Support .063"	1	85-95	56211C	F0TZ-7D014B
N.I.	Pump/ Center Support .067"	1	85-95	56211D	F0TZ-7D014C
N.I.	Pump/ Center Support .071"	1	85-95	56211E	F0TZ-7D014D
N.I.	Pump/ Center Support .075"	1	85-95	56211G	F0TZ-7D014E
N.I.	Pump/ Center Support .079"	1	85-95	56211H	F0TZ-7D014F
N.I.	Pump/ Center Support .094"	1	85-95	56211LA	F0TZ-7D014J
N.I.	Overdrive Sun Gear Drive (Star Washer)	1	85-95	56214	E5TZ-7660A
N.I.	Between Overdrive Planet & Sprag (Retainer)	1	85-95	56220	E5TZ-7L339A
N.I.	Center Support (Front)	1	85-95	56223	E5TZ-7L326A
N.I.	Direct Drum to Forward Drum (Metal)	1	85-95	56229	E5TZ-7C096A
N.I.	Forward Drum/Hub (4 Inner Tabs)	1	85-89	56231	D4ZZ-7D090B
N.I.	Forward Drum/Hub (3 Outer Tabs)	1	85-89	56232	D4ZZ-7D090A
N.I.	Forward Drum/Hub (No Tangs) (Cup Type)	1	85-95	56232A	E7TZ-7A045A
N.I.	Sun Shell/Rear Planet Washer	1	85-95	56243	D4ZZ-7D066A
N.I.	Front & Rear Planet (Front) 2.750" OD (6 Outer Tab)	1-2	85-E89	56244	D4ZZ-7A166A
N.I.	Rear Planet to Hub 3" OD (6 Outer Tab)	1	L89-95	56244B	F0TZ-7A166B
N.I.	Rear Planet to Shell 2.750" OD (6 Outer Tabs)	1	85-E89	56244	D4ZZ-7A166A

ILL.		Qty.	Year	Part #	Ref. #
WASHERS (Cont.)					
N.I.	Rear Planet to Shell 2.750" OD (3 Outer Tabs)	1	L89-95	56244A	F0TZ-7A166A
N.I.	Rear Hub/Sprag Race 2.250" OD (Metal)	1	85-95	56254A	D4ZZ-7D422A
N.I.	Rear Hub/Sprag Race 2.750" OD (Plastic)	1	85-95	56254AA	N.L.
N.I.	Rear Hub/Sprag Race 3 3/16" OD (Bronze)	1	L89-95	56254B	F0TZ-7D422A
N.I.	Rear Case Thrust (4.0L) (OE Style)	1	L89-95	56257	N.L.
N.I.	Governor Support/Case	1	85-95	56263	D4ZZ-7B368A
BEARINGS					
N.I.	Race, Overdrive Planet to Overdrive Sun Gear (Front)	1	85-95	56216	E5TZ-7D235B
N.I.	Bearing, Overdrive Planet/Overdrive Ring Gear Hub	1	85-95	56217	E5TZ-7L495A
N.I.	Bearing w/ Race, Center Support Front (.105")	1	93-95	56223A	F3TZ-7L326A
N.I.	Bearing w/ Race, Center Support to Forward Drum (.149") (1 Notch)	1	93-95	56226A	F3TZ-7C096B
N.I.	Bearing w/ Race, Forward Drum to Planet	1	85-95	56232D	F3TZ-7D234A
N.I.	Bearing w/ Races, Between Forward Planet & Hub	1	86-87	66211	E1FZ-7F374A
N.I.	Bearing w/ Race, Between Forward Planet & Hub	1	88-95	56235A	F2TZ-7F374AA
N.I.	Bearing, Output Shaft Pilot	1	90-95	56268	N.L.
ELECTRICAL COMPONENTS					
N.I.	Connector, 2 Prong Case	1	85-88	56444	E7TZ-7E449A
N.I.	Connector, 3 Prong Case	1	89-95	56444A	E7SZ-7E449A
N.I.	Switch, Neutral Safety (5 Prong)	1	85-95	56410	E6TZ-7A247A
N.I.	Switch, Neutral Safety (4 Prong)	1	85-95	56410A	D6RY-7A247B
N.I.	Sensor, Output Speed (VSS)	1	85-95	36436	E9TP-9E731AA
N.I.	Solenoid Kit (w/ 1 Solenoid, Wire Harness & 2 Prong Connector)	1	85-88	56420AK	E5TZ-7E449A
N.I.	Solenoid Kit (w/ 2 Solenoids, Wire Harness & 3 Prong Connector)	1	89-95	56420K	E8TZ-7M107A
N.I.	Solenoid, 3-4 Shift	1	85-95	56423	E8TZ-7M107A
N.I.	Solenoid, Lock-Up (TCC)	1	85-95	56425	E5TZ-7F037A
VALVE BODY RECALIBRATION KITS					
N.I.	Valve Body Kit, A4LD (Superior)	1	85-95	S56165E	K4ALD
N.I.	Shift Kit-Jr®, A4LD Junior (Transgo®)	1	85-95	T56167E	SK® A4LD JR
N.I.	C3	1	74-87	T56165E	N.L.
VALVE BODY COMPONENTS					
N.I.	Boost Valve Kit, Small .323" w/ Sleeve & O-Rings	1	85-95	56741BA-1	56947-04K
N.I.	Boost Valve Kit, Large .388" (Factory Style)	1	85-95	56741BC-1	56947-03K
N.I.	Spring, TCC Shift Valve Anti Shudder w/ TCC Delay	1	85-95	56741C-3	45064135
N.I.	Spring, TCC Shuttle Valve (Under Solenoid)	1	85-95	56741A-3	E5TZ-7L490A
N.I.	Manual Valve	1	85-95	56741M	E8TZ-7C389A
N.I.	Relief Valve (Bag of 10)	1	85-95	56741A-1	3L5Z-7M203JA
PUMPS					
N.I.	Stator, w/ Gears (6mm Hex Head Bolts)	1	85-87	56520A	E5TZ-7A103A
N.I.	Stator, w/ Gears (8mm Allen Head Bolts)	1	88-95	56520B	F0TZ-7A103A
PUMP COMPONENTS					
N.I.	Plate, Pump (Uses Allen Head Pump Bolts)	1	88-95	56544B	F0TZ-7B472A
N.I.	Pump Gears	1	1995	A56530A	N.L.
DRUMS & COMPONENTS					
N.I.	Overdrive (2 Clutch)	1	L89-95	56550BA	N.L.
N.I.	Overdrive (3 Clutch)	1	85-E89	56550A	E9TZ-7L669A
N.I.	Overdrive (3 Clutch)	1	L89-95	56550B	F0TZ-7L669A
N.I.	Piston, Overdrive & Direct Clutch (Steel Drums)	1-2	85-95	56961	E8TZ-7A262A
N.I.	Springs, Overdrive & Direct Drum Return	20	85-95	56971	F1TZ-7A480B
N.I.	Spring & Retainer Kit, Overdrive & Direct Drum Return	1-2	85-95	56971K	N.L.
N.I.	Retainer, Overdrive Drum Spring	1	85-95	56981	ESTZ-7A527A
N.I.	Direct (4-5 Clutch) (Cast Iron) (Large OD Piston)	1	91-95	56555LA	F5TZ-7D044D
N.I.	Direct (4-5 Clutch) (Steel) (Small OD Piston)	1	85-E89	56555D	E5TZ-7D044E
N.I.	Direct (6 Clutch) (Cast Iron) (4.0L)	1	L89-95	56555M	F0TZ-7D044C
N.I.	Forward (4-5 Clutch)	1	85-96	56554B	F0TZ-7A360A
N.I.	Forward (5-6 Clutch)	1	85-96	56554D	F0TZ-7A360B
N.I.	Forward Piston Rubber Cushion (.330" Thick)	1	85-89	56853	D8ZZ-7B070A
N.I.	Forward Piston Rubber Cushion (.299" Thick)	1	90-95	56853A	F0TZ-7B070A
N.I.	Reverse (w/o Sprag) (Uses Roller Type Sprag)	1	85-95	56556	D4ZZ-7C498A
N.I.	Reverse (w/o Sprag) (Uses Lug Type Sprag)	1	85-95	56556A	F0TZ-7C498A

ILL.		Qty.	Year	Part #	Ref. #
PLANETS & COMPONENTS					
N.I.	Overdrive	1	85-95	56580	XL2Z-7B446DA
N.I.	Ring Gear, Overdrive Planet (Used w/ Steel Caged Sprag)	1	85-95	56590	E5TZ-7A153A
N.I.	Ring Gear, Overdrive Planet (Used w/ Plastic Caged Sprag)	1	90-95	56590B	F3TZ-7A153A
N.I.	Hub, Forward Ring Gear	1	L87-95	56602B	F87Z-7B067AC
N.I.	Ring Gear, Forward Planet (Clutch Spline Length is 1.250")	1	85-88	56592	D4ZZ-7D392A
N.I.	Ring Gear, Forward Planet (Clutch Spline Length is 1.625")	1	88-95	56592B	N.L.
N.I.	Forward (Aluminum)	1	85-89	56582	D4ZZ-7A398A
N.I.	Forward (Steel) (4 Gear)	1	87-95	56582D	E8TZ-7A398A
N.I.	Planet Kit, Forward (Steel) (6 Gear)	1	87-95	56582GK	N.L.
N.I.	Rear (Aluminum) (3 Gear) (10 Driving Lugs)	1	85-95	56584	E7SZ-7D006C
N.I.	Rear (Steel) (4 Gear) (10 Driving Lugs)	1	85-95	56584D	E7SZ-7D006AA
N.I.	Rear (Steel) (6 Gear) (30 Driving Lugs)	1	90-95	56584EA	F0TZ-7D006A
N.I.	Ring Gear Kit, Rear w/ Hub (For Aluminum Planet)	1	85-90	56594K	N.L.
N.I.	Ring Gear Kit, Rear w/ Hub (For Steel Planet w/o Recess)	1	87-95	56594AK	N.L.
N.I.	Ring Gear Kit, Rear w/ Hub (For Steel Planet w/ 4 Oil Notches)	1	90-95	56594BK	F87Z-7D164AA
N.I.	Hub, Rear Ring Gear (Steel Planet)	1	85-95	56604AA	F87Z-7D164AA
SUN GEARS					
N.I.	Sun Gear, Overdrive	1	85-95	56610	F7RZ-7D063AA
N.I.	Sun Gear, Forward (2 Bushing Type)	1	85-95	56612	D4ZZ-7D063A
N.I.	Sun Gear, Forward (No Bushing Type)	1	85-95	56612A	F0TZ-7D063B
ONE WAY CLUTCHES					
N.I.	Sprag, Overdrive (w/ Metal Cage)	1	85-95	56650	E5TZ-7A089A
N.I.	Sprag, Overdrive (w/ Plastic Cage)	1	L89-95	56650B	92GT-7C109AA
N.I.	Sprag, Rear (Spring & Roller Kit) (Exc. 4.0L)	1	85-95	56654	D4ZZ-7D191A
N.I.	Sprag, Rear (Lug Type Kit) (4.0L)	1	L89-95	56654A	90GT-7F109BB
N.I.	Inner Race, Rear Sprag (Roller Type Sprag)	1	L89-95	56664A	N.L.
N.I.	Inner Race, Rear Sprag (Lug Type Sprag)	1	L89-95	56664B	56600B
SHELLS & SUPPORTS					
N.I.	Center Support (Washer Design)	1	85-95	56630	E9TZ-7A130AA
N.I.	Center Support (Bearing Design) (w/o Speed Sensor)	1	92-93	56630A	F1TZ-7A130AA
N.I.	Center Support (Bearing Design) (w/ Speed Sensor)	1	93-95	56630B	F5TZ-7A130BB
N.I.	Center Support Kit (Bearing Design)	1	93-95	56630BK	F1TZ-7A130AA
N.I.	Shell, Driving (4.0L)	1	L89-95	56622A	F0TZ-7D064A
N.I.	Shell, Driving (Exc. 4.0L)	1	85-95	56622	N.L.
N.I.	Shell, Driving (w/ 2 Locking Lugs)	1	L89-95	56622B	F3TZ-7D064A
N.I.	Sun Gear & Shell, Driving (Exc. 4.0L)	1	85-95	56622K	N.L.
N.I.	Sun Gear & Shell, Driving (4.0L)	1	L89-95	56622AK	F0TZ-7D064A
N.I.	Sun Gear & Shell, Driving (w/ 2 Locking Lugs)	1	85-95	56622BK	N.L.
SHAFTS					
N.I.	Input Shaft (9.875" Long)	1	85-95	56670A	XL2Z-7017AA
N.I.	Input Shaft (10" Long)	1	85-95	56670B	XL2Z-7017AA
N.I.	Center Shaft (Bushing Type w/ .438" OD Pilot)	1	85-89	56674	E5TZ-7A658A
N.I.	Center Shaft (Bearing Type w/ .392" OD Pilot)	1	90-95	56674B	F2TZ-7A658B
VALVE BODIES & GOVERNORS					
N.I.	Governor, Small Land on Valve is .326" OD	1	90-95	56680B	N.L.
N.I.	Governor, Small Land on Valve is .385" OD	1	85-95	56680A	E89Z-7C063B
N.I.	Governor, (.314" Small Land OD)	1	86-95	56680D	N.L.
N.I.	Valve Body w/ 1 Large & 1 Small Solenoid (2nd Design 3-4)	1	85-95	56740-4	N.L.
CASES/HOUSINGS & COMPONENTS					
N.I.	Case (Roller Type Sprag) (4.0L)	1	L89-95	56760C	F0TZ-7005-F
MISCELLANEOUS COMPONENTS					
N.I.	Oil Dam (4.0L) (Output Shaft Sleeve)	1	85-95	56698	F0TZ-7B176A
N.I.	Fitting, Cooler Line (20mm Pushes Into Case) (Teckpak)	1	85-95	T56996	N.L.
N.I.	Modulator, C3	1	74-80	56160	N.L.
N.I.	Modulator, C3 (Black Stripe)	1	81-87	56160A	N.L.
N.I.	Modulator, C3 (Green Stripe)	1	81-87	56160B	N.L.
N.I.	Modulator, A4LD, Single Line (w/ Modojust Dial)	1	85-95	56160EA	E5TZ-7A377C
N.I.	Modulator, A4LD, Single Line (Adjustable w/ Restricted Orifice)	1	85-95	56160E	E5TZ-7A377C
N.I.	Nut, Band Adjustment Nut (Coarse Threads)	1-2	85-95	26922	380850-S

ILL.		Qty.	Year	Part #	Ref. #
MISCELLANEOUS COMPONENTS (Cont.)					
N.I.	Band Apply Strut	1	85-95	56915-3	D4ZZ-7D029A
N.I.	Flywheel Spacer, 6 Bolt (4.0L)	1	85-95	AF235S	D4ZZ-6434A
N.I.	Flywheel Spacer, 8 Bolt (4.0L)	1	85-95	AF235SA	F77Z-6434AA
SERVOS & ACCUMULATORS					
N.I.	Piston, Interm & OD Servo (1.625" ID Cover # FB) (# 90GT-F1A)	1-2	85-95	56902AA	F0TZ-7D021B
N.I.	Piston, Interm & OD Servo (1.690" ID Cover # EB) (# 90GT-E1A)	1-2	85-95	56902AB	F7ZZ-7D021EA
N.I.	Piston, Interm & OD Servo (1.750" ID Cover # DB) (# 90GT-D1A)	1-2	85-95	56902AC	F0TZ-7D021A
N.I.	Piston, Interm & OD Servo (1.812" ID Cover # CA/CB)	1-2	85-95	56902AD	E3ZZ-7D021A
N.I.	Piston, Interm & OD Servo (1.920" ID Cover # BA/ BB) (# 83DT-B1A)	1-2	85-95	56902AE	F2ZZ-7D021A
N.I.	Piston, Interm & OD Servo (2.075" ID Cover # AA/AB) (78DT/83DT-A1A/A2A)	1-2	85-95	56902AG	D4ZZ-7D021A
N.I.	Piston, Interm & OD Servo (2.317" ID Cover # ZC) (All)	1-2	85-95	56902AJ	F77Z-7D021ZA
N.I.	Servo Assembly, Reverse (1 Groove)	1	85-95	56910	D7ZZ-7D189C
N.I.	Piston, Reverse Servo	1	85-95	56912	N.L.
N.I.	Reverse Servo Extendo Pin	1	85-95	56913A	56605E
TECHNICAL MANUALS					
N.I.	Tech Manual, A4LD	1	85-95	56400E	83A4LDTM
N.I.	Tech Manual Update, A4LD	1	85-95	56400H	A4LD UPDATE
TOOLS					
N.I.	Servo Bore Tool	1	85-95	T-9212	N.L.
N.I.	Servo Bore Tool Sleeve	1	85-95	T-9212-SL	N.L.
N.I.	Pump Alignment Tool	1	85-95	T-0168AAC	N.L.

Notes

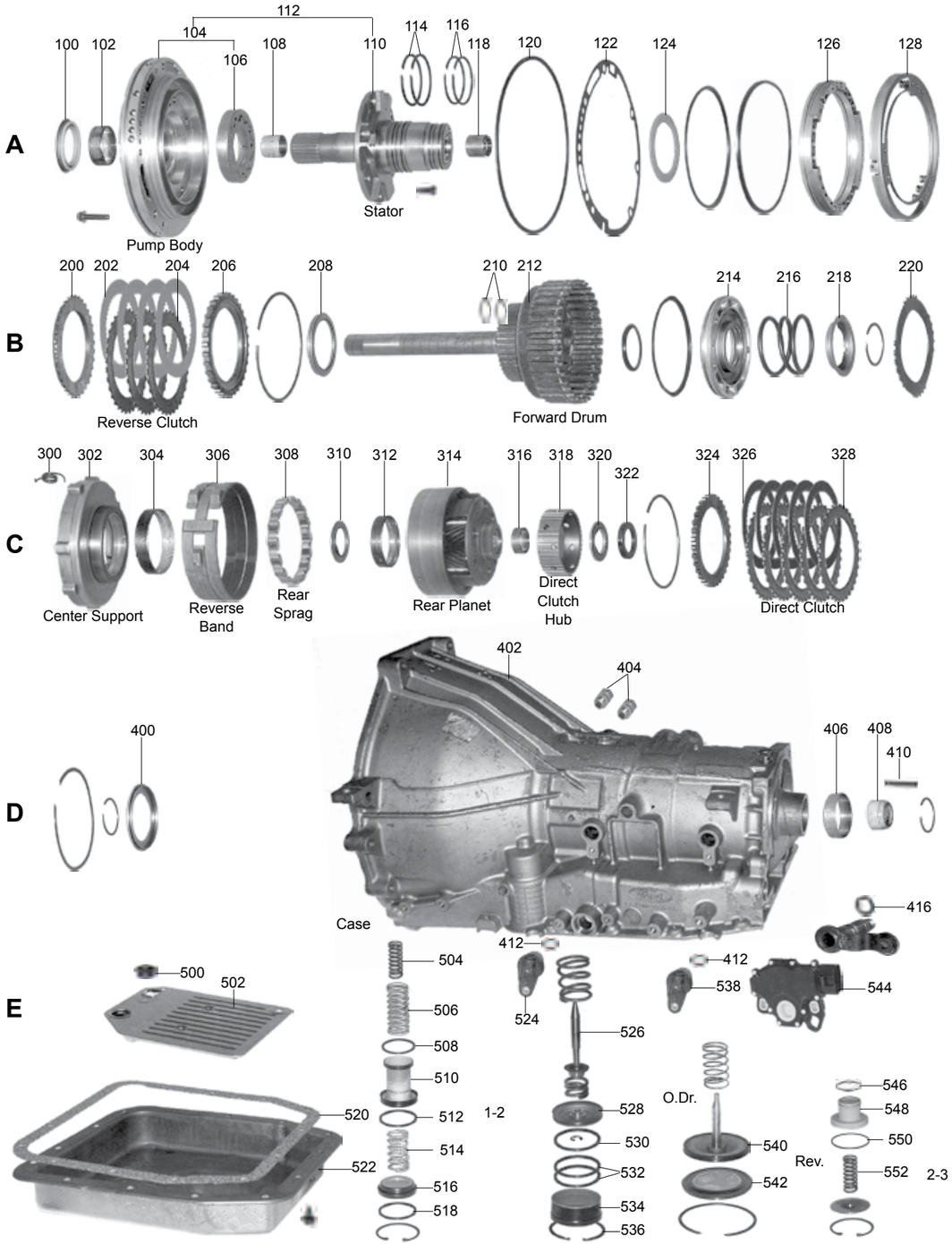
A
100 102 104 106 108 110 112 114 116 118 120 122 124 126 128
Pump Body
Stator
B
200 202 204 206 208 210 212 214 216 218 220
Reverse Clutch
Forward Drum
C
300 302 304 306 308 310 312 314 316 318 320 322 324 326 328
Center Support
Reverse Band
Rear Sprag
Rear Planet
Direct Clutch Hub
Direct Clutch
D
400
402 404
406 408 410
Case
412
416
E
500 502
504 506 508 510 512 514 516 518
520 522
524
526 528 530 532 534 536
1-2
412 538
544
O.Dr.
540 542
546 548 550 552
Rev.
2-3

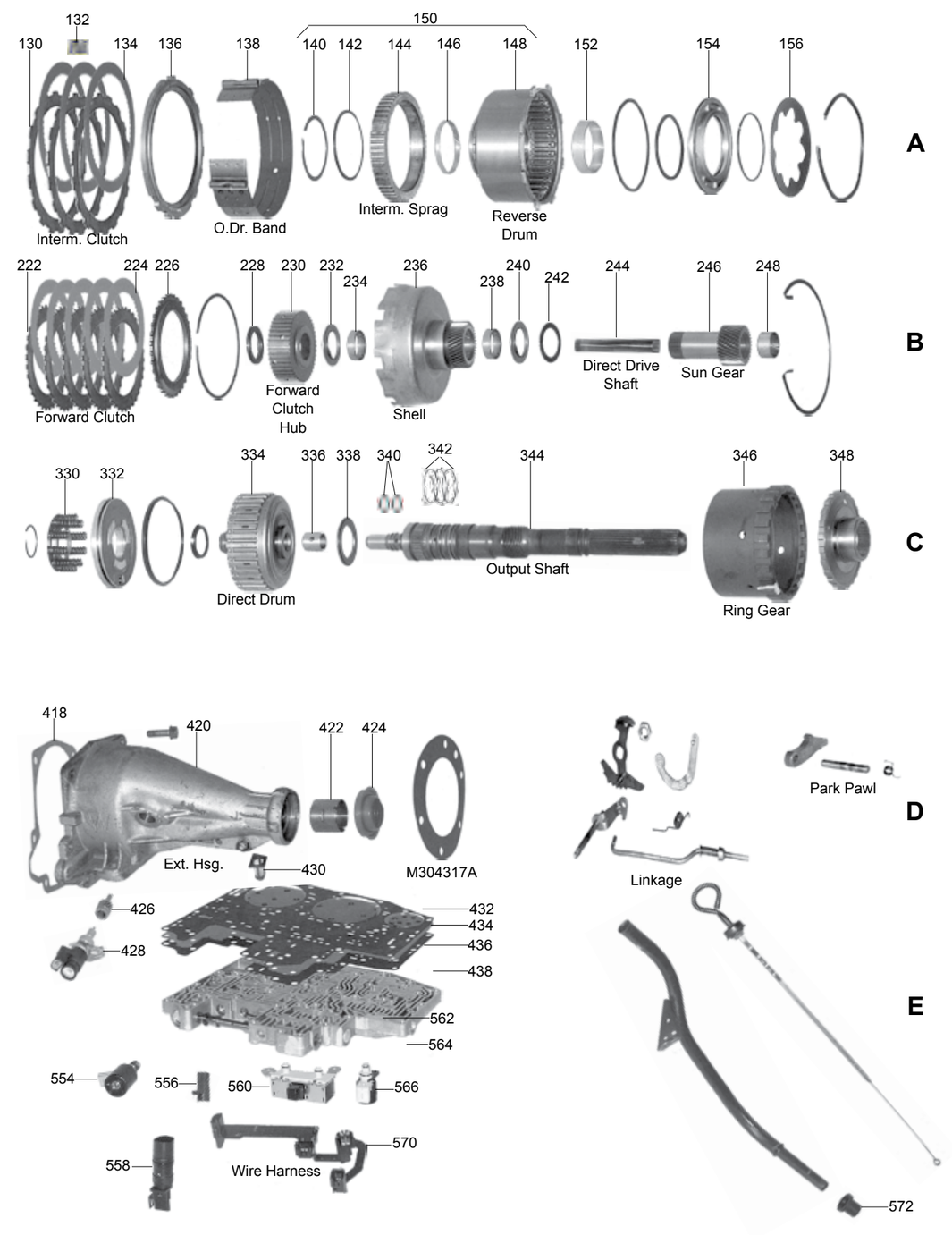
A
130 132 134 136 138 140 142 144 146 148 150 152 154 156
Interm. Clutch
O.Dr. Band
Interm. Sprag
Reverse Drum
B
222 224 226 228 230 232 234 236 238 240 242 244 246 248
Forward Clutch
Forward Clutch Hub
Shell
Direct Drive Shaft
Sun Gear
C
330 332 334 336 338 340 342 344 346 348
Direct Drum
Output Shaft
Ring Gear
D
418 420 422 424
Ext. Hsg.
430
M304317A
426
428
432 434 436 438
562
564
554 556 560 566
558
570
Wire Harness
Park Pawl
Linkage
E
572

AOD, AODE, 4R70W, 4R75W, 4R70E, 4R75E

ILL.		Qty.	Year	Part #	Ref. #
DELUXE KITS (SUPER KITS WITH STEELS)					
N.I.	AOD (FIOD)	1	L83-89	76008A	N.L.
N.I.	AOD (FIOD)	1	89-93	76008B	N.L.
N.I.	AODE	1	92-95	76008EW	N.L.
N.I.	4R70W	1	93-95	76008EAW	N.L.
N.I.	4R70W	1	96-97	76008GW	N.L.
N.I.	4R70W	1	98-03	76008HW	N.L.
N.I.	4R70W, 4R75W (w/ Intermediate Piston)	1	04-Up	76008JW	N.L.
MASTER OVERHAUL KITS (WITH STEELS)					
N.I.	AOD (FIOD)	1	L83-89	76006A	N.L.
N.I.	AOD (FIOD)	1	89-93	76006B	N.L.
N.I.	AODE	1	92-95	76006EW	N.L.
N.I.	4R70W	1	93-95	76006EAW	N.L.
N.I.	4R70W	1	96-97	76006GW	N.L.
N.I.	4R70W	1	98-03	76006HW	N.L.
N.I.	4R70W, 4R75W (w/ Intermediate Piston)	1	04-Up	76006JW	N.L.
MASTER OVERHAUL KITS (LESS STEELS)					
N.I.	AOD (FIOD)	1	80-E83	76004	N.L.
N.I.	AOD (FIOD)	1	L83-93	76004A	N.L.
N.I.	AODE	1	L89-93	76004B	N.L.
N.I.	AODE	1	92-95	76004EW	N.L.
N.I.	4R70W	1	93-95	76004EAW	N.L.
N.I.	4R70W	1	96-97	76004GW	N.L.
N.I.	4R70W, 4R75W (w/ Intermediate Piston)	1	98-03	76004HW	N.L.
N.I.	4R70W, 4R75W (w/ Intermediate Piston)	1	04-Up	76004JW	N.L.
OVERHAUL KITS (WITH RINGS AND SEALS)					
N.I.	AOD (FIOD)	1	80-93	76002	N.L.
N.I.	AODE, 4R70W	1	92-95	76002EW	N.L.
N.I.	4R70W	1	96-03	76002GW	N.L.
N.I.	4R70W, 4R75W	1	04-Up	76002JW	N.L.
BONDED PISTONS					
126A	Piston, Intermediate Clutch (Bonded) (4R70W, 4R75W)	1	04-Up	76962A	3L3Z-7E005AA
GASKETS & O-RINGS					
120A	O-Ring, Front Pump	1	80-Up	76311	E0AZ-7A248A
122A	Gasket, Pump (AOD)	1	80-93	76310	E3SZ-7A136A
122A	Gasket, Pump (AODE, 4R70W)	1	92-Up	76310A	F2VY-7A136A
418D	Gasket, Extension Housing	1	80-08	76305G	F6AZ-7086A
418D	Gasket, Extension Housing (4R70, 4R75)	1	09-Up	76305H	9L3Z-7086B
432D	Gasket, Valve Body (Upper) (White Stripe)	1	80-93	76320	E9AZ-7C155A
432D	Gasket, Valve Body (Upper) (Yellow Stripe)	1	92-95	76320E	F2VY-7C155A
432D	Gasket, Valve Body (Upper) (Light Green Stripe)	1	96-Up	76320EA	1L3Z-7G155AA
436D	Gasket, Valve Body (Lower) (White Stripe)	1	80-89	76321	E9AZ-7D100A
436D	Gasket, Valve Body (Lower) (White or Orange Stripe)	1	96-00	76321EA	XW7Z7D100AA
436D	Gasket, Valve Body (Lower) (Yellow Stripe)	1	80-Up	76321B	F0AZ-7D100A
436D	Gasket, Valve Body (Lower) (Light Green Stripe)	1	92-95	76321E	F3LY-7D100A
436D	Gasket, Valve Body (Lower) (Light Blue Stripe)	1	01-Up	76321EB	1W7P7D100AB
520E	Gasket, Pan (AOD)	1	80-93	76300	E0AZ-7A191B
520E	Gasket, Pan (AODE, 4R70W)	1	92-Up	76300E	F2VY-7A191A
520E	Gasket, Pan (AODE, 4R70W) (Bonded Gasket)	1	92-Up	76300EW	F2VY-7A191A
562E	Gasket, Valve Body Cover (AODE)	1	92-95	76322E	F2VY-7H173A
562E	Gasket, Valve Body Cover (AODE, 4R70W)	1	96-Up	76322EA	F6AZ-7H173A
N.I.	Gasket, Filter (AOD)	1	80-93	76326	E0AZ-7E062A
N.I.	O-Ring, Cooler Line (Viton) Push In Type	1	80-Up	76378V	N.L.
METAL CLAD SEALS					
100A	Front (w/o Flange)	1	80-Up	36070	C2AZ-7A248A
100A	Front (Black w/ Flange)	1	92-Up	76070A	F2VY-7A248A
416D	Linkage Shaft to Case	1	80-Up	36072	C7AZ-7B498A
424D	Rear (w/o Boot) (AOD, AODE)	1	80-92	44074	D5AZ-7052A
424D	Rear (w/ Long Boot) (AOD, AODE)	1	80-Up	26074	D5AZ-7052B
424D	Rear (w/ Short Boot) (AOD, AODE)	1	80-Up	26074A	D5AZ-7052B

AOD, AODE, 4R70W, 4R75W, 4R70E, 4R75E

ILL.		Qty.	Year	Part #	Ref. #
METAL CLAD SEALS (Cont.)					
424D	Rear (w/ Short Boot) (2.487" OD) (4R70W)	1	93-Up	76074A	F7DZ-7052A
N.I.	Throttle Lever (AOD)	1	80-93	76073	E0AZ-7F337A
SEALING RINGS & KITS					
N.I.	Ring Kit (AOD)	1	80-93	76175AK	N.L.
N.I.	Ring Kit (AODE, 4R70W)	1	92-03	76175EK	N.L.
N.I.	Ring Kit (AODE, 4R70W)	1	04-Up	76175GK	N.L.
114A	Stator (Reverse Clutch) 2.624" OD (Metal)	2	80-Up	76179	E0AZ-7D020A
116A	Stator (Forward Clutch) 2.374" OD (Metal)	2	80-92	76181	E0AZ-7D019A
116A	Stator (Forward Clutch) 2.374" OD (Metal, Hardened)	2	93-Up	76181E	F4AZ-7D019A
116A	Stator (Forward Clutch) (Plastic)	2	04-Up	76181G	N.L.
210B	Input Shaft 1.130" OD (Scarf Cut) (Teflon)	2	92-Up	76177ET	F2VY-7B497A
210B	Input Shaft 1.130" OD (Solid) (Teflon)	2	92-Up	76177EAT	N.L.
340C	Output Shaft (Direct Clutch) .914" OD (Metal)	2	80-Up	76180	E0AZ-7F274A
340C	Output Shaft (Direct Clutch) .914" OD (Teflon) (Scarf Cut)	2	80-Up	76180T	E3AZ-7F274A
340C	Output Shaft (Direct Clutch) .914" OD (Teflon) (Solid)	2	80-Up	54177DBT	8635497
342C	Governor 1.752" OD (Metal, Seal Plated)	3-4	80-Up	76189A	E6AZ-7F273A
FRICTION PLATES					
134A	Intermediate (.080") (AOD, AODE)	3	80-95	76104	F2VP-7F219AB
134A	Intermediate (.080") (AOD, AODE) (Hi-Energy)	3	80-95	76104H	N.L.
134A	Intermediate (.080") (AOD, AODE) (High Performance)	AR	80-95	76104HP	N.L.
134A	Intermediate (.066") (4R70W) (Smooth)	3-4	93-97	76104A	F3LP-7F219AB
134A	Intermediate (.066") (4R70W, 4R75W) (Grooved)	4	98-Up	76104B	F75Z-7B164CA
134A	Intermediate (.066") (4R70W) (High Performance)	AR	93-Up	76104AHP	N.L.
202B	Reverse (.080")	4	80-L83	76108	E0AZ-7B164B
202B	Reverse (.061")	4-5	L83-Up	76108A	E2AP-7E311AA
202B	Reverse (.061") (High Performance)	AR	L83-Up	76108AHP	N.L.
224B	Forward (5.25" OD)	4-5	80-89	76108A	E2AP-7E311AA
224B	Forward (5.25" OD) (High Performance)	AR	80-89	76108AHP	N.L.
224B	Forward (5.36" OD) (For Stamped Steel Drums)	5	90-Up	76108B	F2VP-7E311A
224B	Forward (5.36" OD) (For Stamped Steel Drums) (High Performance)	AR	80-89	76108BHP	N.L.
326C	Direct (.075")	5-6	80-97	76106	F2VP-7E313AA
326C	Direct (.075") (High Performance)	AR	80-97	76106HP	N.L.
326C	Direct (.068")	6	97-Up	76106E	F8AZ-7B164BA
326C	Direct (.072") (Hi-Energy)	4	80-Up	76106A	N.L.
326C	Direct (.059")	AR	80-93	76106C	N.L.
STEEL PLATES					
130A	Intermediate (.069")	3	80-Up	76124	E0AZ-7B442BQ
130A	Intermediate (.069") (Kolene)	AR	80-Up	76124K	XL3Z-7B442AA
130A	Intermediate (.079")	4	80-Up	76124A	XL3Z-7B442BA
130A	Intermediate (.089")	AR	80-Up	76124B	XL3Z-7B442CA
130A	Intermediate (.097")	AR	80-Up	76124C	XL3Z-7B442DA
204B	Reverse (.068") (54T) Cast Iron Drum	3	80-89	76128	C8AZ-7B442A
204B	Reverse (.068") (54T) (Kolene)	3	80-89	76128K	C8AZ-7B442A
204B	Reverse (.069") (32T) Stamped Steel Drum	3	90-Up	76128B	F2TZ-7B442A
220B	Cushion, Forward Clutch (w/ Cast Iron Drum)	1	80-Up	76853	D0AZ-7E085A
220B	Cushion, Forward Clutch (w/ Stamped Steel Drum)	1	89-98	76853B	F0SZ-7E085A
220B	Cushion, Forward Clutch (.074" Waved) 4R70W, 4R75W	1	96-Up	76853C	F6AZ-7E085A
222B	Forward (.068") (54T) Cast Iron Drum	5	80-89	76128	C8AZ-7B442A
222B	Forward (.068") (54T) (Kolene)	5	80-89	76128K	C8AZ-7B442A
222B	Forward (.069") (34T) Stamped Steel Drum	5	90-Up	76128A	E9SP-7E314A
328C	Direct (.070") (28T)	4-6	80-89	76126	E0AZ-7B442A
328C	Direct (.070") (28T) (Kolene)	AR	80-Up	76126K	E0AZ-7B442A
328C	Direct (.060") (34T) Stamped Steel Drum	5-6	90-99	76126	N.L.
328C	Direct (.070") (34T) Stamped Steel Drum	5-6	90-99	76126A	E9SZ-7B442A
328C	Direct (.079") (34T) Stamped Steel Drum	1	98-Up	76126E	F6AZ-7B442AA
N.I.	Steel Module (AOD)	1	80-E89	76139	N.L.
N.I.	Steel Module (AOD)	1	L89-93	76139B	N.L.
N.I.	Steel Module (AODE)	1	92-95	76139E	N.L.
N.I.	Steel Module (4R70W)	1	93-97	76139G	N.L.
N.I.	Steel Module (4R70W, 4R75W)	1	98-Up	76139H	N.L.

AOD, AODE, 4R70W, 4R75W, 4R70E, 4R75E

ILL.		Qty.	Year	Part #	Ref. #
PRESSURE PLATES					
136A	Intermediate (.406")	1	80-93	76144	F2AZ-7B066A
136A	Intermediate (.258")	1	93-Up	76144E	F3LY-7B066A
200B	Reverse (Bottom) (.100") Beveled (Cast Drum)	1	80-89	76151	E0AZ-7B066B
200B	Reverse (Bottom) (.100") Beveled (Steel Drum)	1	90-Up	76151A	F2TZ-7B066B
206B	Reverse (Top) (.200") (27T) Flat (Cast Drum)	1	80-89	76150	EA0Z-7B066C
206B	Reverse (Top) (.200") (34T) Beveled (Steel Drum)	1	90-Up	76150A	F2TZ-7B066A
226B	Forward (.115") (34T) (Steel Drum)	1	80-Up	76148A	F0SZ-7B066B
324C	Direct (.220") (28T) (Cast Drum)	1	80-E89	76146	E0AZ-7B066E
324C	Direct (.220") (34T) (Steel Drum)	1	L89-Up	76146A	E9SZ-7B066A
FILTERS					
502E	AOD (2wd)	1	80-93	76010	E0AZ-7A098A
502E	AOD (4wd)	1	84-93	76010A	E4TP-F003AA
502E	AODE, 4R70W (2wd)	1	92-95	76010E	F2VY-7A098AA
502E	AODE, 4R70W (2wd)	1	96-Up	76010EA	F6AZ-7A098A
502E	AODE, 4R70W (4wd)	1	94-Up	76010EA	F6AZ-7A098A
N.I.	Governor Screen (AOD)	1	80-93	76014	E7AZE242A
N.I.	Solenoid Screen (AODE, 4R70W) (Small Square Filter In Valve Body)	1	92-Up	76016	F2VP-7H187A
FILTER KITS					
N.I.	Filter Kit, AOD (2wd)	1	80-93	76011	N.L.
N.I.	Filter Kit, AOD (4wd)	1	84-93	76011A	N.L.
N.I.	Filter Kit, AODE, 4R70W (2wd)	1	92-95	76011EW	N.L.
N.I.	Filter Kit, AODE, 4R70W (2wd)	1	96-Up	76011EAW	N.L.
N.I.	Filter Kit, AODE, 4R70W (4wd)	1	94-Up	76011EAW	N.L.
BANDS					
138A	Overdrive (AOD)	1	80-93	76020	E6AP-7F196AA
138A	Overdrive (AODE, 4R70W)	1	92-Up	76020E	F2VP-7F196BA
306C	Reverse	1	80-Up	76024	F0AZ-7D095A
BUSHINGS					
N.I.	Bushing Kit (w/ Cast Iron Drums)	1	80-91	76030	N.L.
N.I.	Bushing Kit (w/ Stamped Steel Drums)	1	92-93	76030A	N.L.
N.I.	Bushing Kit (w/ Stamped Steel Drums)	1	94-Up	76030B	N.L.
102A	Pump (.758" Wide)	1	80-Up	36034	E0AZ-7B258B
102A	Pump (.697" Wide)	1	80-Up	76034	E9TZ-7B258A
108A	Stator (Front)	1	92-93	36036	C6AZ-7B261C
108A	Stator (Front) (2 Groove)	1	94-Up	76036	F2VP-7B261A
108A	Stator (Rear) w/o Notch	1	92-Up	36036	C6AZ-7B261C
118A	Stator (Rear)	1	80-91	76037	E0AZ-7D018A
118A	Stator (Rear) w/ Notch	1	92-Up	76037B	F4AP-7B261A
146A	Reverse Clutch Drum (Front)	1	80-Up	76046B	E0AZ-7F217A
152A	Reverse Clutch Drum (Rear)	1	80-Up	76046	E0AZ-7F218A
234B	Reverse Sun Gear (Shell)	2	80-Up	76051	E0AZ-7A193A
248B	Forward Sun Gear	1	80-Up	76052	E0AZ-7B262A
304C	Center Support	1	80-Up	76044	C4AZ-7A132A
312C	Planet (Front) (2.770" OD)	1	80-Up	76058B	E0AZ-7B374A
316C	Planet (Rear) (1.380" OD)	1	80-Up	76058	E0AZ-7A375A
336C	Direct Drum	1	80-Up	76038A	N.L.
406D	Case	1	80-Up	76064	E0AZ-7025A
406D	Case (Top Hat, Replaces Case Bushing)	1	80-Up	76064B	F5AP7F242AA
422D	Extension Housing 1.506" ID (Babbitt)	1	80-92	26066	B3TZ-7A034A
422D	Extension Housing 1.506" ID (Bronze)	1	80-92	76066A	D3AP7A034BA
422D	Extension Housing 1.606" ID (Bronze) (4R70W)	1	93-Up	76066B	F3LP-7A034AA
N.I.	Forward Drum Shaft	1	80-93	76048	E0AZ-7E214A
N.I.	Bore Repair Sleeve, Case (2.00" Long) (AOD) (req T-1695)	1	80-Up	T-1695-SL	N.L.
N.I.	Bore Repair Sleeve, Case (1.50" Long) (AODE, 4R70W) (req T-1695)	1	80-Up	T-1695-SLE	N.L.
THRUST WASHERS/BEARINGS					
WASHERS					
N.I.	Washer Kit (Washers Only)	1	80-Up	76200	N.L.
N.I.	Washer Kit (Selective Washers Only)	1	80-Up	76200B	N.L.
124A	Stator .052" (#1) Green	1	80-Up	76211	E0AZ-7D014A
124A	Stator .070" (#2) Yellow	1	80-Up	76211A	E0AZ-7D014B

AOD, AODE, 4R70W, 4R75W, 4R70E, 4R75E

ILL.		Qty.	Year	Part #	Ref. #
WASHERS (Cont.)					
124A	Stator .087" (#3) Natural	1	80-Up	76211B	E0AZ-7D014C
124A	Stator .104" (#4) Red	1	80-Up	76211C	E0AZ-7D014D
124A	Stator .121" (#5) Blue	1	80-Up	76211D	E0AZ-7D014E
208B	Reverse Drum to Forward Drum	1	80-84	76257	E0AZ-7A166A
310C	Rear Planet (Bronze) (Bearing Replacement)	1	80-Up	76247A	E0AZ-7F242A
322C	Direct Drum to Hub (w/ Lip) (4R70W)	1	80-Up	76252	F4AZ-7F237A
BEARINGS					
N.I.	Bearing Kit (AOD)	1	80-93	76201A	N.L.
N.I.	Bearing Kit (AODE)	1	92-Up	76201E	N.L.
N.I.	Bearing Kit (4R70W)	1	93-03	76201EA	N.L.
208B	Bearing, Reverse Drum to Forward Drum	1	83-Up	76257A	E1TZ-7A166A
228B	Bearing, Forward Clutch Drum to Hub (Front)	1	80-Up	36238A	E0AZ-7F231A
232B	Bearing, Sun Shell (Front)	1-2	80-Up	76235	E0AZ-7C096A
242B	Bearing, Sun Shell to Forward Sun Gear (.130") (AOD)	1	80-93	76235	E0AZ-7C096A
242B	Bearing, Sun Shell to Forward Sun Gear (.170") (AODE, 4R70W)	1	92-03	76244B	F3LY-7F244A
242B	Bearing, Sun Shell to Forward Sun Gear (.205") (AODE, 4R70W)	1	03-Up	76235B	N.L.
310C	Bearing, Rear Planet (Front)	1	80-Up	76251	E0AZ-7F243A
310C	Bearing, Direct Drum to Hub	1	80-Up	76251	E0AZ-7F243A
338C	Bearing, Direct Drum to Rear Ring Gear Hub (AOD)	1	80-93	76229	E0AZ-7F240A
338C	Bearing, Direct Drum to Rear Ring Gear Hub (AODE)	1	92-Up	76229B	F1AZ-7F240A
400D	Bearing w/ 1 Race, Rear Support to Case	1	80-91	76260	E0AZ-7F242A
400D	Bearing w/ Races, Rear Support to Case	1	92-Up	76260A	F6AZ-7F242BA
ELECTRICAL COMPONENTS					
524E	Sensor, Center Case (4R70E, 4R75E)	1	04-Up	76438	3L3Z-7M101AA
538E	Sensor, Output Speed (VSS) (Cable Design)	1	84-Up	36436	E9TP-9E731AA
538E	Sensor, Output Speed (VSS) (Non Cable Design)	1	89-Up	86436A	E9LZ-9E731A
538E	Sensor, Output Speed (VSS) (Case) (Square Connector)	1	04-Up	76436C	3L3Z-7H103AA
538E	Sensor, Output Speed (VSS) (Case) (Square Connector)	1	01-03	76436B	1L3Z-7H103AB
538E	Sensor, Output Speed (VSS) (Case) (Rectangular Connector)	1	92-01	76436A	F4AZ-7H103A
544E	Switch, Neutral Safety (4 Prong)	1	80-89	56410A	D6RY-7A247B
544E	Switch, Neutral Safety (5 Prong)	1	90-93	76410B	F0VY-7A247A
544E	Sensor, MLPS (8 Pin) Update Pack (Exc. Crown Victoria)	1	92-97	76410E	F5AZ-7A247A
544E	Sensor, MLPS (8 Pin, .860" Bolt Insert) (Crown Victoria 95-10/97)	1	95-L97	76410EB	F5VY-7F293AA
544E	Sensor, DTR (12 Pin, .860" Bolt Insert) (Crown Victoria 11/97-Up)	1	L97-Up	76410EC	F8AZ-7F293AA
544E	Sensor, DTR (12 Pin, .530" Bolt Insert)	1	98-Up	76410EA	F7LZ-7F293AB
554E	Solenoid, EPC (Soft Wire)	1	92-97	76431	F6AZ-7G383AA
554E	Solenoid, EPC (Hard Wire)	1	98-04	76431A	26500036AA
554E	Solenoid, EPC (Hard Wire) Black Connector	1	05-08	76431C	5C2Z-7G383AB
554E	Solenoid, EPC (Soft Wire)	1	09-Up	76431D	9L3Z-7G383A
558E	Connector, Case w/ Harness (Soft Wire)	1	92-97	76446A	F2VY-76276A
558E	Connector, Case (Hard Wire) (Connector Only)	1	98-08	76444A	F8AZ-7G276AA
558E	Connector, Case (Soft Wire) (w/ Harness)	1	09-Up	76446	9L3Z-7G276A
560E	Solenoid, Shift (Dual) (Soft Wire)	1	92-97	76421	F7AZ-7G484AA
560E	Solenoid, Shift (Dual) (Hard Wire)	1	98-08	76421A	F8AZ-7G484AA
560E	Solenoid, Shift (Dual) (Soft Wire)	1	09-Up	76421B	9L3Z-7G484A
566E	Solenoid, Lock-Up (TCC) (Soft Wire, Black Connector)	1	92-94	76425B	F2VY-7G136A
566E	Solenoid, Lock-Up (TCC) (Soft Wire, White Connector) (Rostra)	1	95-97	76430B	F5AZ-7G136A
566E	Solenoid, Lock-Up (TCC) (Soft Wire, White Connector)	1	95-97	76425BA	F5AZ-7G136A
566E	Solenoid, Lock-Up (TCC) (Hard Wire)	1	98-08	76425BB	F8AZ-7G136AA
566E	Solenoid, Lock-Up (TCC) (Soft Wire)	1	09-Up	76425C	9L3Z-7G136A
570E	Wire Harness, Internal (Hard Wire)	1	98-08	76446E	F8AZ-7G276BA
N.I.	Wire Harness External (Repair) (Case Connector, Solenoid) (AODE)	1	92-Up	86445EHK	F2PZ-14A464G
VALVE BODY RECALIBRATION KITS					
N.I.	Shift Kit® (AOD) (Transgo®)	1	80-93	T76165	SK® AOD
N.I.	Shift Kit® (AODE, 4R70W) (Transgo®)	1	91-Up	T76165E	SK® AODE
N.I.	Reprogramming Kit™ (AOD), HD & Hi-Perf (Transgo®)	1	83-93	T76171	AOD-HP
N.I.	Reprogramming Kit™ (AODE), HD & Hi-Perf (Transgo®)	1	91-Up	T76171E	AODE-HD2
N.I.	Shift Correction Package (AOD) (Superior)	1	80-93	S76165	KAOD
N.I.	Shift Correction Package (AODE) (Superior)	1	92-Up	S76165E	KAOD-E

AOD, AODE, 4R70W, 4R75W, 4R70E, 4R75E

ILL.		Qty.	Year	Part #	Ref. #
VALVE BODY COMPONENTS					
434D	Valve Body Separator Plate (4R70, 4R75E) (Superior)	1	L00-Up	76747C	K092
N.I.	Valve Body Separator Plate Protector (4R70, 4R75E) (Sonnax)	1	L00-Up	76748	76507F-01K
N.I.	Check Ball, Valve Body (1/4")	7	80-Up	76741A-5	E0AZ-7E195B
N.I.	Check Ball, Valve Body (5/16")	7	80-Up	76741-5	E7DZ-7E195A
N.I.	Valve Kit, Pressure Regulator (AODE, 4R70W) (Steel)	1	92-Up	76741PRK	N.L.
PUMPS					
112A	Pump (AOD)	1	80-93	76500	E0AZ-7A103A
112A	Pump w/ .570" Pump Gears (AODE)	1	92-94	76500A	F3LY-7A103A
112A	Pump w/ .608" Pump Gears (4R70W)	1	95-03	76500B	F4AZ-7A103A
112A	Pump (4R70E, 4R75E)	1	04-Up	76500C	7L3Z-7A103A
PUMP COMPONENTS					
104A	Pump Body w/ .608" Gears (Aluminum)	1	93-03	76510B	N.L.
106A	Pump Gears (.660" Thick) (AOD)	1	80-93	36530	C6AP-7C010B
106A	Pump Gears (.569" Thick)	1	92-93	76530A	N.L.
106A	Pump Gears (.609" Thick)	1	93-08	76530B	F4AP-7H169AA
106A	Pump Gears (.656" Thick)	1	04-Up	76530D	9C2P-7H169BA
110A	Stator, Pump (AOD)	1	80-93	76520	E0AZ-7A108A
110A	Stator, Pump (AODE)	1	92-94	76520A	F4AZ-7A108A
110A	Stator, Pump (AODE, 4R70W, 4R75W)	1	93-03	76520B	F4AZ-7A108A
110A	Stator, Pump (4R70E, 4R75E)	1	04-Up	76520C	N.L.
DRUMS & COMPONENTS					
126A	Piston, Intermediate Clutch (Bonded) (4R70W, 4R75W)	1	04-Up	76962A	3L3Z-7E005AA
148A	Reverse (4 Clutch) (Cast Iron) (Bearing Design)	1	L83-93	76556A	E9TZ-7D044B
148A	Reverse (4 Clutch) (Stamped Steel) uses 7 Roller Sprag	1	92-Up	76556D	F4AZ-7D044C
148A	Reverse (4 Clutch) (Stamped Steel) uses 14 Roller Sprag	1	92-97	76556E	F3LY-7D044A
148A	Reverse (4 Clutch) (Stamped Steel) (w/o Ratchet Design Sprag)	1	98-Up	76556G	F8AZ-7D044AA
154A	Piston, Reverse Clutch (For Stamped Steel Drum)	1	90-Up	76966E	F2TZ-7D402A
156A	Spring, Reverse Clutch Return	1	80-Up	76976	E0AZ-7B070A
156A	Spring, Reverse Clutch Return (4R70)	1	04-Up	76976A	3L3Z-7B070AA
212B	Forward w/ Hollow Input Shaft (5 Clutch) (Cast Iron) (AOD)	1	80-93	76554	E4AZ-7F207A
212B	Forward w/ Hollow Input Shaft (5 Clutch) (Stamped Steel) (AOD)	1	89-93	76554A	F0AZ-7F207A
212B	Forward w/ Solid Shaft	1	92-Up	76554D	6L3Z-7F207A
230B	Clutch Hub, Forward Clutch (AOD)	1	80-93	76574	E0AZ-7B067A
230B	Clutch Hub, Forward Clutch	1	92-Up	76574A	F2AZ-7B067A
318C	Clutch Hub, Direct Clutch (Cast# AB) (AOD)	1	83-93	76575AA	E0AZ-7F236B
318C	Clutch Hub, Direct Clutch (Cast# F30)	1	92-Up	76575B	N.L.
330C	Retainer w/ Spring, Direct Clutch Return	1	80-Up	76975	E5AZ-7F235A
334C	Direct (5 Clutch) (Cast Iron) (28T Steels)	1	82-93	76555CA	F2AZ-7F283B
334C	Direct (6 Clutch) (Cast Iron) (28T Steels)	1	82-93	76555CB	E8LY-7F283A
334C	Direct (6 Clutch) (Stamped Steel) (34T Steels)	1	92-Up	76555D	F6AZ-7F283AA
PLANETS & COMPONENTS					
314C	Planet (AOD, AODE) (Top Cover is 4.750" OD)	1	80-Up	76584A	E6AZ-7A398A
314C	Planet (4R70W) (Top Cover is 4.845" OD) (Riveted)	1	93-Up	76584B	F2AZ-7A398A
314C	Planet (4R70W) (Top Cover is 4.845" OD) (Welded)	1	04-Up	76584C	3L3Z-7A398AB
346C	Ring Gear (72T w/o Holes) (AOD)	1	80-93	76594	E0AZ-7A153A
346C	Ring Gear (72T w/ Holes) (AODE)	1	92-Up	76594A	F2AZ-7A153A
346C	Ring Gear (88T w/ Holes) (4R70W)	1	92-Up	76594B	F3LY-7A233A
346C	Ring Gear (88T w/o Holes) (4R75E, 4R75W)	1	04-Up	76594D	3L3Z-7A233AB
348C	Hub, Ring Gear (5.380" OD) (Raised Surface Where Bearing #229 Rides)	1	80-91	76604	E0AP-7D164A
348C	Hub, Ring Gear (5.380" OD) (Lowered Surface Where Bearing # 229 Rides)	1	92-95	76604AA	F3LY-7D164B
348C	Hub, Ring Gear (5.160" OD) (4R70W)	1	93-Up	76604C	N.L.
N.I.	Geartrain (w/ Planet, Sun Gear, Ring Gear, Shell) (AOD)	1	80-Up	76583	N.L.
N.I.	Geartrain (w/ Planet, Sun Gear, Ring Gear, Shell) (AODE)	1	92-95	76583A	N.L.
N.I.	Geartrain (w/ Planet, Sun Gear, Ring Gear, Shell) (4R70W)	1	93-03	76583B	N.L.
N.I.	Geartrain (w/ Planet, Sun Gear, Ring Gear, Shell) (4R75W)	1	04-Up	76583C	N.L.
N.I.	Geartrain (w/ Planet, Sun Gear, Ring Gear, Shell) (4R75E)	1	04-Up	76583D	N.L.
SUN GEARS					
246B	Sun Gear, Forward (30T) (AOD, AODE)	1	80-95	76612	E0AZ-7A399A
246B	Sun Gear, Forward (31T) (4R70W)	1	93-02	76612A	F3LY-7A399A
246B	Sun Gear, Forward (31T) (4R70E, 4R75E)	1	03-Up	76612B	4L3Z-7A399AA

AOD, AODE, 4R70W, 4R75W, 4R70E, 4R75E

ILL.		Qty.	Year	Part #	Ref. #
ONE WAY CLUTCHES					
142A	Retainer, Intermediate Sprag (7 Roller Sprag)	1	80-92	76694	F3AZ-7D191A
142A	Retainer, Intermediate Sprag (14 Roller Sprag)	1	93-Up	76694A	F3AZ-7D191A
144A	Roller, Intermediate (7 Roller)	1	80-97	76652B	F4AZ-7A089A
144A	Roller, Intermediate (14 Roller)	1	92-97	76652A	F7LZ-7A089AA
144A	Roller, Ratchet Design (4R70W) Intermediate (14 Inner Splines)	1	98-Up	76652C	F8AZ-7A089AA
144A	Outer Race, Intermediate Sprag (7 Roller)	1	80-97	76663	F3LY-7F221A
144A	Outer Race, Intermediate Sprag (14 Roller)	1	92-97	76663B	F3LY-7F221A
148A	Outer Race Kit (Ratchet Design)	1	98-Up	76556GK	F8AZ-7D044AA
308C	Roller, Low Roller Clutch (Rear)	1	80-Up	34654	7471002
SHELLS & SUPPORTS					
236B	Shell w/ Front Sun Gear (36T) Magnetic (AOD) (Cast Reverse Drum Type)	1	80-90	76624	E0AZ-7A019A
236B	Shell w/ Front Sun Gear (36T) Magnetic (AODE) (Steel Reverse Drum Type)	1	90-95	76624A	F4AZ-7A019A
236B	Shell w/ Front Sun Gear (38T) Magnetic (4R70W, 4R75W)	1	93-03	76624B	F4AZ-7A019A
236B	Shell w/ Front Sun Gear (38T) Non Magnetic (4R70E/W, 4R75E/W)	1	04-Up	76624C	9L3Z-7A109A
236B	Kit, Shell w/ Front & Forward Sun Gear (Magnetic) (4R70W, 4R75W)	1	93-Up	76624BK	4L3Z-7D234AA
302C	Center Support	1	80-03	76630	E0AZ-7A130A
302C	Center Support	1	04-Up	76630B	N.L.
300C	Spring, Anti-Clunk	1	80-Up	76639	2L3Z-7F277AA
SHAFTS					
244B	Shaft, Direct Drive (AOD) (Input)	1	80-93	76670	E9SZ-7F208A
244B	Shaft, Direct Drive (AODE, 4R70W)	1	92-Up	76670A	F4AZ-7F351A
VALVE BODIES & GOVERNORS					
N.I.	Governor, w/ Weight (AOD)	1	80-93	76680	N.L.
438D	Valve Body AOD (w/ 4th Accum.)	1	80-87	76740-7	N.L.
438D	Valve Body AOD (No 4th Accum.)	1	87-93	76740-8	N.L.
438D	Valve Body Cast F2	1	1992	76740-5	N.L.
438D	Valve Body Cast F3	1	93-95	76740-6	N.L.
438D	Valve Body Cast F6 (w/ 2-3 Accum Plate) (Wired Harness)	1	96-97	76740-2	N.L.
438D	Valve Body Cast F6 (w/ 2-3 Accum Plate) (Solid Harness)	1	98-00	76740-1	N.L.
438D	Valve Body 4R70W, 4R75W (No 2-3 Accum Plate)	1	00-Up	76740-9	N.L.
CASES/HOUSINGS & COMPONENTS					
402D	Case (AOD) (Large .750" Cooler Line Fittings)	1	80-93	76760A	N.L.
402D	Case (AODE) (3 Bolt Starter) (Large VB Pin Holes, 1.10" Wide Linkage)	1	92-Up	76760BB	N.L.
402D	Case (AODE) (3 Bolt Starter) (Small VB Pin Holes, 1.10" Wide Linkage)	1	96-Up	76760D	N.L.
402D	Case (4R75W) (3 Bolt Starter) (1.10" Wide Linkage)	1	04-Up	76760H	N.L.
402D	Case (4R75W) (2 Bolt Starter) (1.10" Wide Linkage)	1	04-Up	76760HA	N.L.
522E	Pan (AODE) (4wd)	1	92-Up	76765B	N.L.
538E	Housing, Driven Speed-O (Cable Driven)	1	80-93	36436	E9TP-9E731AA
538E	Housing, Driven Speed-O (Electric)	1	92-Up	86436A	E9LZ-9E731A
N.I.	Bracket, EPC Solenoid Bracket (AODE)	1	96-04	76843A	F6AZ-7H111A
N.I.	Bracket, EPC Solenoid Bracket (AODE)	1	05-Up	76843B	N.L.
SNAP RINGS					
140A	Intermediate Sprag Retainer to Reverse Drum	1	80-Up	76874	11501326
140A	Intermediate Sprag Retainer to Reverse Drum (Spiral) Update	1	80-Up	76874A	11501326
N.I.	Spiral Snap Ring for Direct Drum Shaft	1	80-Up	76555-4	76811-01K
MISCELLANEOUS COMPONENTS					
404D	Fitting, Cooler Push-In 20mm 3/8" Line (Teckpak)	1	80-Up	T56996	N.L.
404D	Fitting, Cooler Push-In 18mm 5/16" Line (Teckpak)	1	80-Up	T76996	E6VY-7D273A
SERVOS & ACCUMULATORS					
506E	Spring, 1-2 Accumulator (Pink)	1	92-Up	76926A	F4UZ-7F284A
506E	Spring, 1-2 Accumulator (White)	1	92-Up	76926B	F7AZ-7F284AA
506E	Spring, 1-2 Accumulator (Purple)	1	92-Up	76926E	F3LY-7F284A
506E	Spring, 3-4 Accumulator (Pink)	1	92-Up	76926A	F4UZ-7F284A
506E	Spring, 3-4 Accumulator (White)	1	92-Up	76926B	F7AZ-7F284AA
506E	Spring, 3-4 Accumulator (Purple)	1	92-Up	76926E	F3LY-7F284A
510E	Piston, 1-2 Accumulator (Bonded)	1	94-Up	76927B	F7AP-7F249AA
510E	Piston & Sleeve Kit, 1-2 Accumulator (AODE, 4R70W) (req T-76890-TL)	1	92-Up	76927K	76890-01K
516E	Cover, 1-2 Accumulator (Bonded) (AODE)	1	94-Up	76929A	F4AZ-7F247A
528E	Piston, Overdrive Servo (Super Servo) (Superior) (AOD)	1	80-93	A76902S	K011

ILL.		Qty.	Year	Part #	Ref. #
SERVOS & ACCUMULATORS (Cont.)					
528E	Piston, Overdrive Servo (Super Servo) (Superior) (AODE, 4R70W)	1	93-98	A76902SA	K085
528E	Piston, Overdrive Servo 2.680" OD (1 Piece Bonded) (AODE)	1	92-Up	76902E	F2VY-7H188A
528E	Piston, Overdrive Servo 2.500"OD (Bonded) (AODE)	1	93-Up	76902EA	F7AZ-7H188AA
540E	Piston, Low/ Reverse Servo (1-Groove)	1	80-Up	76912	E0AZ-7D189A
540E	Piston, Low/ Reverse Servo (2-Groove)	1	80-Up	76912A	E0AZ-7D189B
540E	Piston, Low/ Reverse Servo (3-Groove)	1	80-Up	76912B	E0AZ-7D189C
542E	Cover, Low/ Reverse Servo	1	80-Up	76914	E0AZ-7D036A
548E	Piston, 2-3 Accumulator (AODE) (Bonded) (Retros 83-Up)	1	92-Up	76932EA	F7AZ-7H292AA
552E	Spring Kit, 2-3 Accumulator (Designed not to Coil Bind) (Pkg of 3)	1	92-Up	A76926K	N.L.
552E	Spring, 2-3 Accumulator (Pink) (1.075" Wide)	1	92-Up	76926A	F4UZ-7F284A
552E	Spring, 2-3 Accumulator (White) (1.075" Wide)	1	92-Up	76926B	F7AZ-7F284AA
552E	Spring, 2-3 Accumulator (Purple) (1.075" Wide)	1	92-Up	76926E	F3LY-7F284A
552E	Spring, 2-3 Accumulator (0.835" Wide)	1	92-Up	76931A	E0AZ-7F285A
N.I.	Servo Assembly, Overdrive (V-6) (w/ Letter A) (AOD)	1	80-93	76900B	N.L.
N.I.	Accumulator Assembly, 2-3 Accumulator (AOD)	1	80-93	76930	N.L.
N.I.	Accumulator Assembly, 2-3 Accumulator (AODE)	1	92-Up	76930E	F3LY-7F284A
TECHNICAL MANUALS					
N.I.	Tech Manual (AOD)	1	80-93	76400	83AODTM
N.I.	Tech Manual (AODE, 4R70W)	1	92-Up	76400E	83AODETM
N.I.	Tech Manual (AODE, 4R70W) Update Handbook	1	92-Up	76400H	AODE/4R70W
TOOLS					
N.I.	Turbine Shaft Solid Sealing Ring Installer	1	80-Up	T-2142	N.L.

Notes

Notes

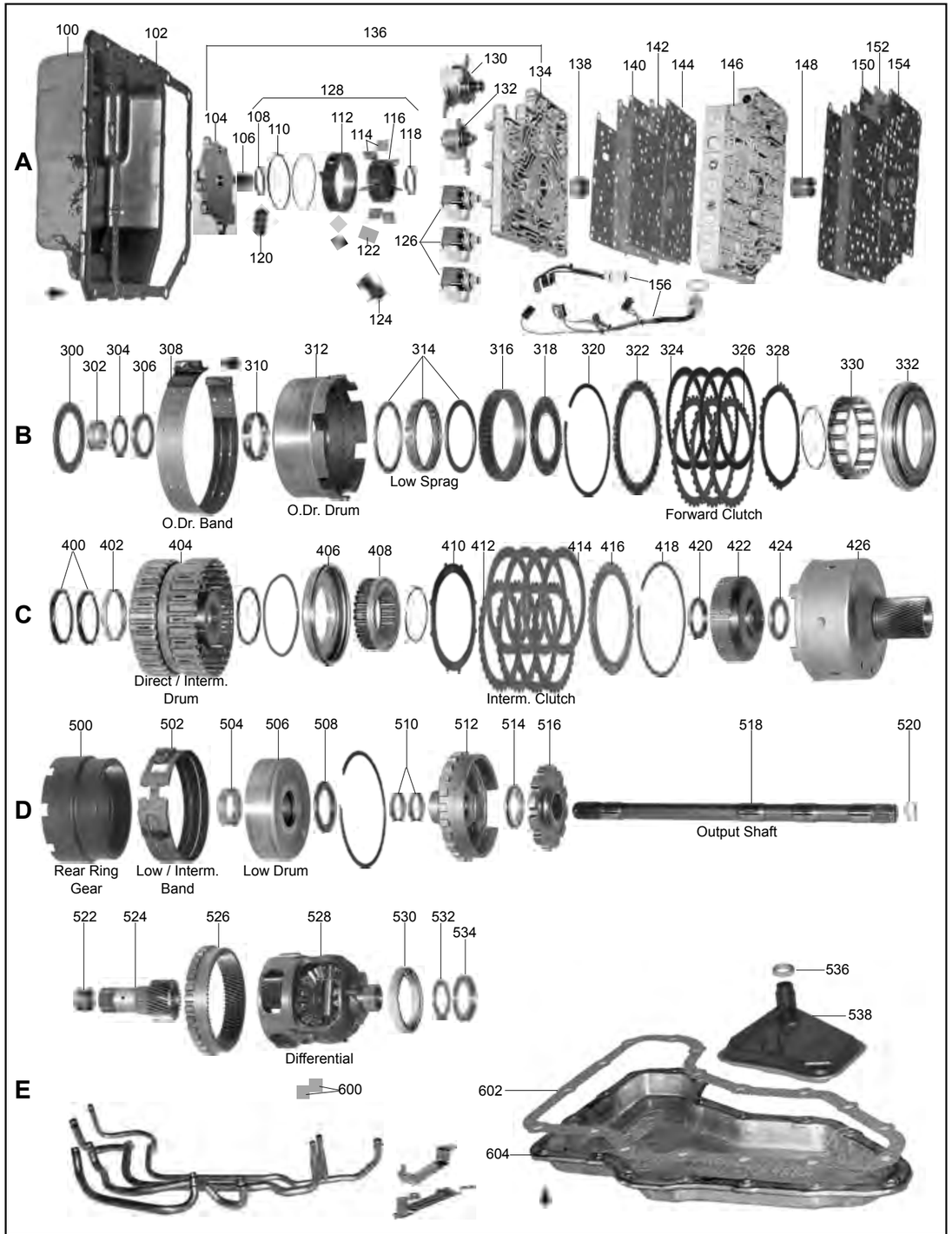
A
B
C
D
E
O.Dr. Band
O.Dr. Drum
Low Sprag
Forward Clutch
Direct / Interm. Drum
Interm. Clutch
Rear Ring Gear
Low / Interm. Band
Low Drum
Output Shaft
Differential

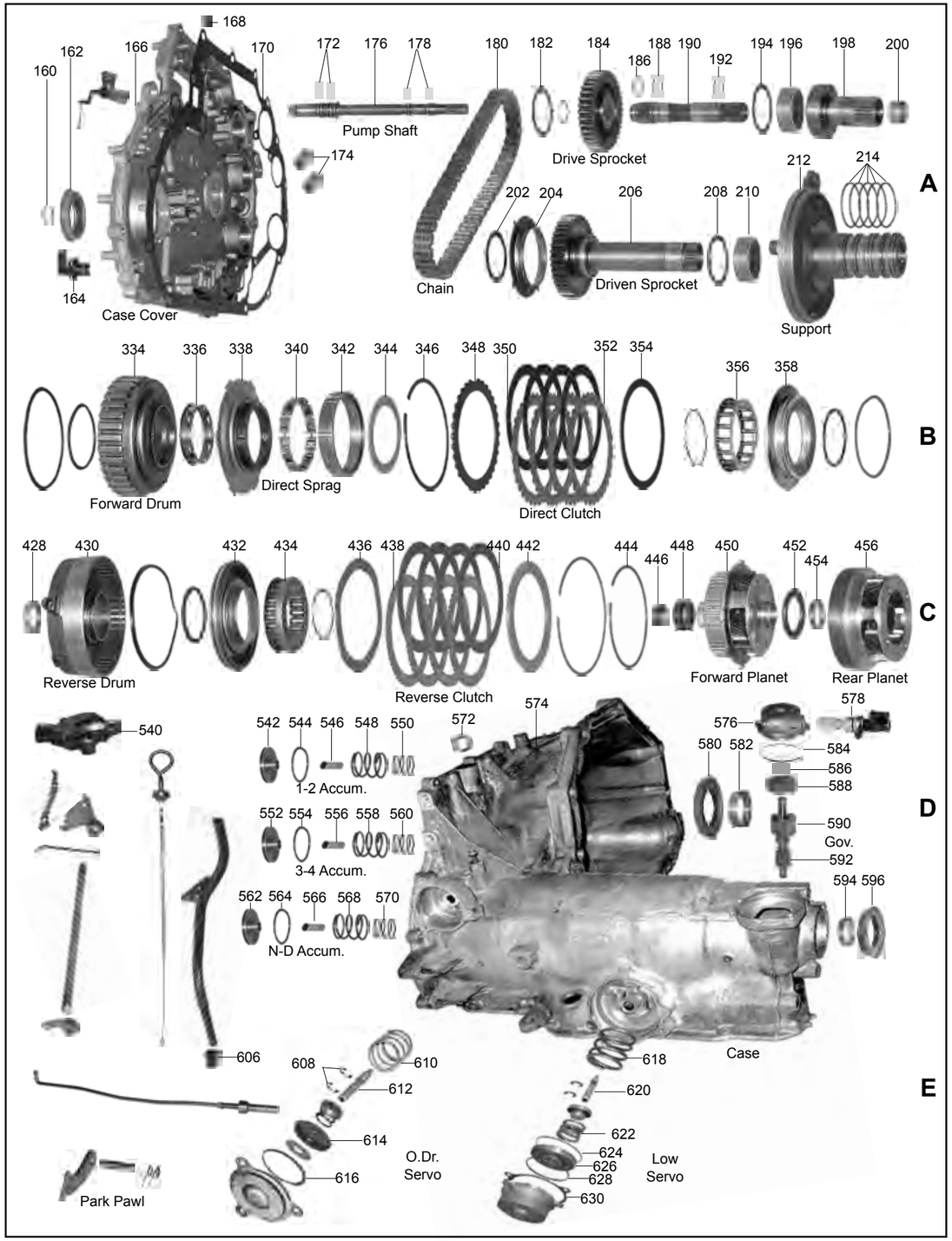
A
B
C
D
E
Case Cover
Pump Shaft
Drive Sprocket
Chain
Driven Sprocket
Support
Forward Drum
Direct Sprag
Direct Clutch
Reverse Drum
Reverse Clutch
Forward Planet
Rear Planet
1-2 Accum.
3-4 Accum.
N-D Accum.
Gov.
Case
Park Pawl
O.Dr. Servo
Low Servo

ILL.		Qty.	Year	Part #	Ref. #
DELUXE KITS (SUPER KITS WITH STEELS)					
N.I.	AXOD	1	86-87	86008	N.L.
N.I.	AXOD	1	88-90	86008A	N.L.
N.I.	AXODE (AX4S) (w/o Pistons)	1	1991	86008E	N.L.
N.I.	AXODE (AX4S) (w/o Pistons) (3.0L)	1	92-98	86008EA	N.L.
N.I.	AXODE (AX4S) (w/o Pistons) (3.0L)	1	99-03	86008EBW	N.L.
MASTER OVERHAUL KITS (WITH STEELS)					
N.I.	AXOD	1	86-87	86006	N.L.
N.I.	AXOD	1	88-90	86006A	N.L.
N.I.	AXODE (AX4S) (w/o Pistons)	1	1991	86006E	N.L.
N.I.	AXODE (AX4S) (w/o Pistons) (3.0L)	1	92-98	86006EA	N.L.
N.I.	AXODE (AX4S) (w/o Pistons) (3.0L)	1	99-03	86006EBW	N.L.
N.I.	AXODE (AX4S) (w/ Pistons) (3.8L Windstar)	1	96-98	86006EDF	N.L.
N.I.	AXODE (AX4S) (w/ Pistons) (3.8L Windstar)	1	99-03	86006ECW	N.L.
MASTER OVERHAUL KITS (LESS STEELS)					
N.I.	AXOD	1	86-90	86004	N.L.
N.I.	AXODE (AX4S) (w/o Pistons)	1	1991	86004E	N.L.
N.I.	AXODE (AX4S) (w/o Pistons) (3.0L)	1	92-98	86004EA	N.L.
N.I.	AXODE (AX4S) (w/o Pistons) (3.0L)	1	99-03	86004EBW	N.L.
N.I.	AXODE (AX4S) (w/ Pistons) (3.8L Windstar)	1	96-98	86004EDF	N.L.
N.I.	AXODE (AX4S) (w/ Pistons) (3.8L Windstar)	1	99-03	86004ECW	N.L.
OVERHAUL KITS (WITH RINGS AND SEALS)					
N.I.	AXOD	1	86-90	86002	N.L.
N.I.	AXODE (AX4S) (w/o Pistons)	1	91-98	86002E	N.L.
N.I.	AXODE (AX4S) (w/o Pistons)	1	99-03	86002EBW	N.L.
BONDED PISTONS					
N.I.	Bonded Piston Kit, Windstar 3.8L	1	96-97	86960K	N.L.
N.I.	Bonded Piston Kit, Windstar 3.8L	1	98-03	86960AK	N.L.
332B	Piston, Forward Clutch (Bonded) (.830" Tall)	1	96-97	86964H	F8DZ-7A262AB
332B	Piston, Forward Clutch (Bonded) (.975" Tall)	1	98-03	86964HA	F88Z-7A262AA
358B	Piston, Direct Clutch (Bonded)	1	96-03	86965B	F4DP-7F254BA
406C	Piston, Intermediate Clutch (Bonded)	1	96-03	86962H	F88Z-7E005AA
406C	Piston, Intermediate Balance (Bonded)	1	96-03	86963H	F4DZ-7H185A
GASKETS & O-RINGS					
102A	Gasket, Main Control Cover	1	86-95	86301	E6DZ-7F396A
102A	Gasket, Main Control Cover (Bonded)	1	96-03	86301GW	F6DZ-7F396A
140A	Gasket, Pump Plate to Pump (AXODE, AX4S)	1	91-03	86310AE	F3DZ-7G331A
140A	Gasket, Pump Plate to Valve Body (AXODE, AX4S)	1	91-03	86310BE	F1DZ-7A136A
142A	Bonded Gasket, # AH (Pump Plate) (Taurus, Sable, Continental)	1	94-95	86310GB	F5DZ-7R167A
142A	Bonded Gasket, # 51 (Pump Plate) (Windstar, Taurus, Sable)	1	95-03	86310GC	F58Z-7R167A
142A	Bonded Gasket, # 99 (Pump Plate) (Windstar, Taurus, Sable)	1	99-03	86310GE	XF2Z-7R167AA
150A	Gasket, VB Plate to Valve Body	1	91-98	86321E	F3DZ-7D100A
150A	Gasket, VB Plate to Valve Body	1	99-03	86321G	N.L.
152A	Bonded VB Plate, # 31 (Taurus SHO 3.2L)	1	94-95	86320GE	F5DZ-7Z490B
152A	Bonded VB Plate, # 40 (Taurus, Sable 3.0L)	1	94-95	86320GA	F5DZ-7Z490C
152A	Bonded VB Plate, # 41 (Taurus, Sable, Continental 3.8L)	1	94-95	86320GB	F5DZ-7Z490D
152A	Bonded VB Plate, #'s 42, 50, 63, 97 (All 3.0L)	1	96-97	86320GG	F6DZ-7Z490FB
152A	Bonded VB Plate, #'s 47, 67, 69 (All 3.8L)	1	96-97	86320GH	F68Z-7Z490CA
152A	Bonded VB Plate, # 53 (Windstar 3.0L)	1	94-95	86320GC	F58Z-7Z490B
152A	Bonded VB Plate, # 58 (Windstar 3.8L)	1	94-95	86320GD	F58Z-7Z490A
152A	Bonded VB Plate, #'s 95, 94, 99 (All 3.0L, 3.8L)	1	99-00	86320GL	XF2Z-7Z490BA
152A	Bonded VB Plate, # 98 (All 3.0L, 3.8L)	1	1998	86320GJ	F88Z-7Z490AA
154A	Gasket Package, Pump/Valve Body (No Stripe) (w/ 86320 & 86321)	1	1986	86320K	N.L.
154A	Gasket Package, Pump/Valve Body (White Stripe) (w/ 86320B & 86321B)	1	1987	86320BK	N.L.
154A	Gasket Package, Pump/Valve Body (Yellow Stripe) (w/ 86320C & 86321C)	1	88-90	86320CK	N.L.
154A	Gasket, VB Plate to Case Cover	1	91-98	86320E	F1DZ-7C155A
154A	Gasket, VB Plate to Case Cover	1	99-03	86320G	N.L.
170A	Gasket, Case Cover to Case	1	86-99	86324	E6DZ-7G303A
170A	Gasket, Case Cover To Case	1	00-03	86324A	YF1Z-7G303AA
192A	O-Ring, Turbine Shaft (23 Spline Shaft)	1	86-E94	86380	87022-S96
584D	O-Ring, AXOD Governor Cover	1	86-90	86345	803201S
600E	Seal, Rear Lube Tube to Case	1	86-E93	54386A	E6DZ-7G085A
600E	Seal, Rear Lube Tube to Differential Support	1	L93-03	86383E	F3DZ-7G085A

ILL.		Qty.	Year	Part #	Ref. #
GASKETS & O-RINGS (Cont.)					
602E	Gasket, Bottom Pan	1	86-95	86300	E6DZ-7A191A
602E	Gasket, Bottom Pan (Bonded Gasket)	1	96-03	86300GW	F6DZ-7A191A
616E	Seal, Overdrive Servo Cover (Thick Wall)	1	86-03	86367	E6DZ-7D024A
624E	O-Ring, Low/ Intermediate Servo Piston (Viton)	1	86-03	86361A	N.L.
628E	O-Ring, Low/ Intermediate Servo Cover	1	86-03	86362	E6DZ-7D040A
630E	Gasket, Low/ Intermediate Servo	1	86-03	86307L	F2DZ-7D026A
METAL CLAD SEALS					
162A	Axle (Both)	2	86-03	86076	E6DZ-1177A
580D	Front	1	86-03	86070	E6DZ-7F401A
N.I.	Main Control Shaft	1	86-03	86074	E6DZ-7F337A
N.I.	Pump Drive	1	86-03	86079	E6SP-7N089
SEALING RINGS & KITS					
N.I.	Ring Kit (Teflon)	1	86-03	86175T	N.L.
110A	Pump Slide 3.079"OD (Metal)	1	86-03	86176	E6DZ-7G281A
172A	Pump Shaft (Front) .693"OD (Teflon)	2	86-03	86177AT	E6DZ-7G093A
178A	Pump Shaft (Rear) .833"OD (Teflon)	2	86-03	86177BT	E6DZ-7G092A
214A	Forward & Direct 2.466"OD (Metal)	5	86-03	86179	E6DZ-7D019A
214A	Forward & Direct 2.466"OD (Teflon)	5	86-03	86179T	N.L.
FRICTION PLATES					
324B	Forward (52T)	4	86-E91	86108	E6SP7E311AB
324B	Forward (57T)	4	L91-03	86108A	F3DP7E311AC
350B	Direct	4-5	86-95	86106	E8DP7B164BA
350B	Direct (Hi-Energy) (use w/ Kolene Steels)	4-5	96-98	86106H	XF2Z-7B164CA
350B	Direct (Hi-Energy) 2nd Design (use w/ Non Kolene Steels) 2nd Design	4-5	99-03	86106A	XF2Z-7B164CA
414C	Intermediate	4-5	86-03	86106	E8DP7B164BA
414C	Intermediate (Hi-Energy) (use w/ Kolene Steels)	4-5	95-98	86106H	XF2Z-7B164CA
414C	Intermediate (Hi-Energy) (use w/ Non Kolene Steels) 2nd Design	4-5	99-03	86106A	XF2Z-7B164CA
440C	Reverse	4	86-03	86110	E6SP7E312AB
STEEL PLATES					
326B	Forward (4.710"ID)	4	86-E91	86126	E6DZ-7B442A
326B	Forward (4.940"ID)	4	L91-03	86128	XF1Z-7B442BA
326B	Forward (4.940"ID) (Kolene)	4	L91-03	86128K	N.L.
328B	Steel Cushion, Forward (.073") 4.730"ID	1	90-91	86129B	F0DZ-7E085A
328B	Steel Cushion, Forward (.083") 4.930"ID	1	92-03	86129H	F2DZ-7E085A
352B	Direct .070" (34T)	4-5	86-03	86126	E6DZ-7B442A
352B	Direct .070" (34T) (Kolene)	4-5	86-03	86126B	XF2Z-7B442AA
410C	Steel Cushion, Intermediate (20T, .067")	1	86-03	86125A	E8DZ-7E085A
410C	Steel Cushion, Intermediate (8T, .071")	1	90-03	86125E	F5OZ-7E085BA
412C	Intermediate .070" (34T)	5	88-03	86126	E6DZ-7B442A
412C	Intermediate .090" (34T)	5	86-87	86126A	E6DZ-7B442B
412C	Intermediate .070" (34T) (Kolene)	4	88-03	86126B	XF2Z-7B442AA
412C	Intermediate .095" (32T)	4	86-03	86126C	F7DZ-7B442BA
412C	Intermediate .095" (32T) (Kolene)	4	97-03	86126H	F7DZ-7B442BA
436C	Reverse Cushion	1	86-03	86854	E6DZ-7E085A
438C	Reverse	4	86-03	86130	XF1Z-7B442AA
N.I.	Steel Module, AXOD	1	L89-90	86139A	N.L.
N.I.	Steel Module, AXODE (AX4S)	1	92-03	86139EA	N.L.
PRESSURE PLATES					
322B	Forward (.170") (4.930"ID) Flat	1	92-03	86148HA	6F1Z-7B066A
322B	Forward (.278") (4.930"ID) Flat	1	92-03	86148HC	F2DZ-7B066A
348B	Direct (.130")	1	93-03	86146H	F5DZ-7B066A
416C	Intermediate (.125")	1	86-91	86144	E8DZ-7B066A
416C	Intermediate (.203") (w/ Hump)	1	86-91	86144A	E6DZ-7B066B
442C	Reverse (.196")	1	86-03	86150	E6DZ-7B066D
FILTERS					
538D	Filter, w/ .250" Orange Lip Seal	1	86-95	86010	E6DZ-7A098A
538D	Filter, w/ .490" Orange Lip Seal (Taurus SHO)	1	93-95	86010E	F3DP7G186AB
538D	Filter, w/ .420" Green Lip Seal	1	96-03	86010H	F6DZ-7A098A
N.I.	Screen, By-Pass Solenoid	1	86-03	86016	E6DZ-7G308A
N.I.	Low/ Intermediate Circuit	1	86-03	86017	E9DZ-7H162A

ILL.		Qty.	Year	Part #	Ref. #
FILTER KITS					
N.I.	Filter Kit, w/ .250" Orange Lip Seal	1	86-95	86011	N.L.
N.I.	Filter Kit, w/ .490" Orange Lip Seal (Taurus SHO)	1	93-95	86011E	N.L.
N.I.	Filter Kit, w/ .420" Green Lip Seal	1	96-03	86011GW	N.L.
BANDS					
308B	Overdrive	1	86-03	86020	E6DZ-7F196A
502D	Low/ Intermediate (1-2) (Exc. below)	1	86-95	86026	F4DZ-7D034A
502D	Low/ Intermediate (1-2) Mercon Design	1	95-97	86026G	F4DP7D034AB
502D	Low/ Intermediate (1-2) Mercon 5 Design	1	98-03	86026GA	F88P-7D034AA
BUSHINGS					
N.I.	Bushing Kit	1	86-93	86030	N.L.
N.I.	Bushing Kit	1	94-03	86030A	N.L.
138A	Replaces Pump Needle Bearing	1	86-03	86209B	N.L.
200A	Converter Reactor	1-2	86-03	64047	8631903
302B	Driven Sprocket Support	1	86-03	86045	E6SP7G170AA
310B	Overdrive Drum (w/ 6 Slots)	1	86-03	86038	E8DP7G210AA
336B	Inner Sprag Race (.500" Wide)	1	86-03	86044	E6SP7G138AB
336B	Inner Sprag Race (.655" Wide)	1	86-03	86044A	F3SP-7G13AA
402C	Direct/Intermediate Clutch Drum	1	86-03	86046	E6SP7G123AA
428C	Sun Shell (1.582"OD)	2	86-92	86051	E6SP7F209AA
428C	Sun Shell (1.613"OD)	1	93-03	86051A	N.L.
446C	Front Planet	1	86-91	86053	E6SP7G220AA
454C	Rear Planet	1	86-03	86058	E6SP-7B375A
504D	Rear Drum w/ Sun Gear (1.974"OD)	1	86-91	86061	E6SP7D065AA
504D	Rear Drum w/ Sun Gear (2.004"OD)	1	92-03	86061B	N.L.
510D	Final Drive Sun Gear Support .842" Wide	1	86-03	86060B	E7DP7A132AA
522D	Final Drive Sun Gear	1	86-03	86056	E6SP7G344AA
582D	Converter Hub	1	86-03	86031	E6SP7N805AB
594D	Rear Case, Final Drive Output Support	1	86-03	86064	E6SP7E110AA
N.I.	Front Planet External (Sun Gear)	1	86-03	86052	N.L.
THRUST WASHERS/BEARINGS					
WASHERS					
N.I.	Washer Kit	1	86-03	86200	N.L.
182A	Drive Sprocket to Case Cover (3 Uneven Spaced Tabs)	1	86-95	86279	E6DZ-7G099A
182A	Drive Sprocket to Case Cover (3 Even Spaced Tabs)	1	95-03	86279A	F5DZ-7G099A
194A	Drive Sprocket to Converter Reactor (3 Uneven Spaced Tabs)	1	86-95	86279	E6DZ-7G099A
194A	Drive Sprocket to Converter Reactor (3 Even Spaced Tabs)	1	95-03	86279A	F5DZ-7G099A
202A	Driven Gear to Case Cover (3 Tab Metal)	1	86-94	86280	E6DZ-7G096A
202A	Driven Gear to Case Cover (3 Tab Plastic)	1	95-03	86280A	F5DZ-7G096A
300B	Driven Sprocket Support to Overdrive Drum .088"	1	86-03	86214	E6DZ-7D014A
300B	Driven Sprocket Support to Overdrive Drum .098"	1	86-03	86214A	E6DZ-7D014B
300B	Driven Sprocket Support to Overdrive Drum .107"	1	86-03	86214B	E6DZ-7D014C
300B	Driven Sprocket Support to Overdrive Drum .117"	1	86-03	86214C	E6DZ-7D014D
304B	Driven Sprocket Support to Direct & Intermediate Drum .056"-.062"	1	86-03	86219	E6DZ-7G273A
304B	Driven Sprocket Support to Direct & Intermediate Drum .064"-.070"	1	86-03	86219A	E6DZ-7G273B
304B	Driven Sprocket Support to Direct & Intermediate Drum .076"-.080"	1	86-03	86219B	E6DZ-7G273C
304B	Driven Sprocket Support to Direct & Intermediate Drum .085"-.089"	1	86-03	86219C	E6DZ-7G273D
304C	Driven Sprocket to Direct/Intermediate Support (Plastic)	1	86-03	86281	E6DZ-7G115A
318B	Forward Clutch Drum to Low Sprag (4 Tab)	1	86-03	86229	E6DZ-7A166A
344B	Direct/Intermediate Clutch Drum to Direct Sprag (2 Tab)	1	86-03	86232	F2DZ-7F369A
532D	Differential to Case .045"-.049"	1	86-91	86293	F2DZ-7G103A
532D	Differential to Case .064"-.069"	1	86-91	86293B	F2DZ-7G103C
532D	Differential to Case .061"	1	92-03	86293C	F2DZ-7G103D
532D	Differential to Case .065"	1	92-03	86293CA	F2DZ-7G103E
532D	Differential to Case .072"	1	92-03	86293CC	F2DZ-7G103G
BEARINGS					
138A	Bearing, Pump Needle Bearing (1.002"OD)	1	86-03	86209C	XF2Z-7G184AA
138A	Bearing, Pump Needle Bearing (1.065"OD)	1	86-03	86209H	XF1Z-7G184AA
196A	Needle Bearing, Converter Reactor (Inner)	1	86-03	64295	8631186
210A	Needle Bearing, Driven Sprocket Support (Inner)	1	86-03	86298A	E6DZ-7G247A
306B	Bearing w/ Race, Driven Sprocket Support to Direct & Intermediate Drum	1	86-03	36217	E6DZ-7F240A
420C	Bearing w/ Race, Intermediate Hub (Both Sides)	2	86-03	86235	E6DZ-7C096A
446C	Needle Bearing, Front Planet (Captured)	1	86-03	86241	N.L.

ILL.		Qty.	Year	Part #	Ref. #
BEARINGS (Cont.)					
448C	Needle Bearing, Front Planet Shaft (Outer)	1	86-03	86237	N.L.
452C	Bearing w/ Race, Front Planet to Rear Planet	1	86-03	86238	E6DZ-7G177A
508D	Bearing w/ Race, Rear Sun Gear Drum to Differential Support	1	86-03	36254C	E6DZ-7G178A
514D	Bearing w/ Race, Differential Support to Parking Gear	1	86-03	86260	E6DZ-7F405A
534D	Bearing w/ Race, Differential to Case	1	86-03	86292	E6DZ-7G112A
N.I.	Bearing Kit	1	86-03	86201A	SBK-F4
N.I.	Bore Bearing, Front Planet (Flat Bearing) (Remove Pinion Gears)	1	86-03	86241A	E6SP7G104AA
N.I.	Needle Bearing, Rear Planet (Captured)	1	86-03	86251	N.L.
N.I.	Bearing w/ Race, Differential to Sun Gear	1	86-03	86289	E6DZ-7F404A
ELECTRICAL COMPONENTS					
124A	Sensor, TOT/TFT (Transmission Oil Temp)	1	91-03	86437	F1DZ-7H141A
126A	Solenoid, Shift (1-2, 2-3, 3-4)	3	92-03	86420	F1DZ-7G484A
130A	Solenoid, Electronic Pressure Control (EPC)	1	91-03	86431	F6DZ-7G383BB
132A	Solenoid, Lock-Up	1	86-90	86425	E6DZ-7G136A
132A	Solenoid, Modulated Lock-Up (White) (Low OHM)	1	91-97	86425B	F10Y-7G136A
132A	Solenoid, Modulated Lock-Up (Blue) (High OHM)	1	98-03	86425H	F7OZ-7G136AA
156A	Wire Harness, Internal (Non-Electronic) (3.0L)	1	86-90	86446	E6DZ-7G276A
156A	Wire Harness, Internal (Non-Electronic) (3.8L)	1	86-90	86446A	E8DZ-7G276A
156A	Wire Harness, Internal (White Case Connector) (Side)	1	91-92	86446E	F1DZ-7G276A
156A	Wire Harness, Internal (Gray Case Connector) (9 Prong)	1	93-03	86446EB	F5DZ-7G276B
164A	Sensor, Input Speed (TSS)	1	91-03	86438	F1DZ-7M101A
540D	Switch, Neutral Safety (8 Pin w/ Conversion Update)	1	91-92	86410E	F2DZ-7A247AA
540D	Switch, MLPS (8 Pin Connector)	1	93-97	86410EA	F5DZ-7F293BA
540D	Switch, MLPS (10 Pin Connector)	1	98-02	86410HA	F8DZ-7F293AB
N.I.	Switch, Pump Oil Pressure	1	86-90	86414	E6DZ-7E440B
N.I.	Switch, 3-2, 4-3 Pressure Switch	2	86-03	86412	E6DZ-7E440A
N.I.	Switch, Neutral Pressure Switch	1	86-03	86414	E6DZ-7E440B
N.I.	Sensor, Output Speed (VSS) (Analog - Cable Driven)	1	86-98	36436	E9TP9E731AA
N.I.	Sensor, Output Speed (VSS) Gear Driven	1	86-98	86436A	E9LZ-9E731A
N.I.	Sensor, Output Speed (VSS) Cable Driven (1.100"OD)	1	86-98	86436	F5DZ-9E731AA
N.I.	Sensor, Output Speed (VSS) (w/ 13"Harness)	1	99-03	86436G	XF2Z-7H103AA
N.I.	Wire Harness, VSS Connector Assembly	1	86-03	76445C	F2PZ-14A464A
N.I.	External Harness Repair, Top Connector, AXODE (AX4S)	1	93-03	86445EC	F2PZ-14A464G
N.I.	External Harness Repair, Top Connector, AXODE (AX4S) (Rostra)	1	93-03	86445EHK	F2PZ-14A464G
N.I.	External Harness Repair, Speed Sensor, AXODE (AX4S)	1	91-03	76445C	F2PZ-14A464A
VALVE BODY RECALIBRATION KITS					
N.I.	Shift Kit®, AXOD (Transgo®)	1	86-92	T86165	SK® AXOD
N.I.	Shift Kit®, AXODE (AX4S) (Transgo®)	1	91-03	T86165E	SK® AXODE
N.I.	Shift Kit-Jr®, AX4S Junior (Transgo®)	1	96-03	T86167E	SK®AXODEJR
N.I.	Valve Body Kit, AXOD (Superior)	1	86-03	S86165	K-AXOD
N.I.	Valve Body Kit, AXODE (Superior)	1	91-99	S86165E	K-AXOD-E
N.I.	1-2 Capacity Mod. Spring & Clip Kit (AXOD) (Superior)	1	86-90	S86165SC	K006
VALVE BODY COMPONENTS					
N.I.	Check Ball, Valve Body (5/16")	AR	86-03	76741-5	E7DZ-7E195A
N.I.	Clip, Valve Body Retainer (10 Per Bag) (Sonnax # 96201-10)	1	86-03	86741-4B	96201-10
N.I.	Clip, Valve Body Retainer (10 Per Bag) (Sonnax # 96201-11)	1	86-03	86741-4C	96201-11
N.I.	Clip, Valve Body Retainer (10 Per Bag) (Sonnax # 96201-9)	1	86-03	86741-4A	96201-09
N.I.	Clip Kit w/ Spring (Capacity Mod. Valve) (AXOD) (Superior)	1	86-90	S86165SC	K006
N.I.	Sleeve & Plunger, By-Pass Clutch Control	1	86-03	86741A-2	96201-06K
N.I.	Sleeve, Valve Body to Pump Shaft (Press-In)	1	86-03	86741V	96201-18BLK
N.I.	Spring, Pressure Regulator (Elevated) (AX4S)	1	95-03	86741P-3	96201-28
N.I.	Valve Kit, Boost Valve & Sleeve (.475") 3.0L	1	86-03	86741TCK	96201-13K
N.I.	Valve Kit, Boost Valve & Sleeve (.491") 3.8L	1	86-03	86741TAK	96201-08K
N.I.	Valve Kit, Bypass TCC Control Valve & Sleeve	1	86-03	86741B-2	96206-01K
N.I.	Valve Kit, O.S. Bypass Control Clutch (AX4S) (req T-96201-TL)	1	86-03	86741BK	96201-19K
N.I.	Valve Kit, O.S. Converter Regulator (AX4S) (req T-96201-TL3)	1	86-03	86741QK	96201-23K
N.I.	Valve Kit, O.S. Solenoid Regulator (AX4S) (req T-96201-TL2)	1	86-03	86741LK	96201-21K
N.I.	Valve, Pressure Regulator w/ Springs (Oversized) (req T-96206-TL2)	1	95-03	86741PK	96206-10K
PUMPS					
136A	Pump, AXODE (AX4S) (RFF1)	1	91-03	86500E	E8DZ-7A103B

ILL.		Qty.	Year	Part #	Ref. #
PUMP COMPONENTS					
104A	Pump Cover	1	91-03	86520H	96200-01
108A	Pump Vane Rings	2	86-03	86538	E6SP-7G287
112A	Pump Slide	1	86-03	86534	E6SP7R194AC
114A	Pump Vanes	7	86-03	86533	96925
116A	Pump Rotor	1	86-03	86532	E6SP7A146FA
122A	Pump Slide Pivot Pin	1	86-03	86535	96200-02
128A	Pump Rotor Kit	1	86-03	86531	K86880
198A	Converter Reactor (Support) 3 Uneven Spaced Holes for Washer # 86279	1	86-03	86529	E6DZ-7A108A
198A	Converter Reactor (Support) 3 Even Spaced Holes for Washer # 86279A	1	86-03	86529A	F6DZ-7A108AA
DRUMS & COMPONENTS					
312B	Overdrive (6 Lugs For Shell)	1	86-03	86550	E6DZ-7L669A
312B	Overdrive (36 Lugs For Shell)	1	86-03	86550H	F5DZ-7L669BA
332B	Piston, Forward Clutch (Steel)	1	86-03	86964A	F4DZ-7A262A
332B	Piston, Forward Clutch (Steel) (Taurus SHO)	1	86-03	86964AA	F4DZ-7A262B
332B	Piston, Forward Clutch (Bonded) (.830" Tall)	1	96-97	86964H	F8DZ-7A262AB
332B	Piston, Forward Clutch (Bonded) (.975" Tall)	1	98-03	86964HA	F88Z-7A262AA
334B	Forward (13mm, Thick Splines) (Exc. Taurus SHO)	1	86-E96	86554AA	E6DZ-7A360A
334B	Forward (10mm Thick Splines) (3.0L) (Taurus SHO Only)	1	86-03	86554B	F6DZ-7A360BA
334B	Forward (10mm Thick Splines) (3.8L)	1	96-03	86554H	F5DZ-7A360A
342B	Clutch Hub, Direct Overrun (.740" Thick Outer Race)	1	86-90	86575	E6DZ-7D171B
342B	Clutch Hub, Direct Overrun (.830" Thick Outer Race)	1	91-03	86575A	N.L.
358B	Piston, Direct Clutch Apply	1	86-03	86965	E6DZ-7A262A
358B	Piston, Direct Clutch (Bonded)	1	96-03	86965B	F4DP-7F254BA
404C	Direct & Intermediate (Steel Piston)	1	86-E96	86552A	F6DZ-7G120A
404C	Direct & Intermediate (Bonded Piston Type) (Exc. 3.0L)	1	L96-03	86552B	F6DZ-7G120BA
404C	Direct & Intermediate (Bonded Piston Type) (3.0L)	1	98-03	86552BA	1F1Z-7G120BA
404C	Direct & Intermediate (Bonded Piston Type) (3.8L)	1	L96-03	86552H	F5DZ-7G120A
406C	Piston, Intermediate Clutch (Bonded)	1	96-03	86962H	F88Z-7E005AA
406C	Piston, Intermediate Balance (Bonded)	1	96-03	86963H	F4DZ-7H185A
408C	Retainer w/ Springs, Intermediate Clutch	1	86-03	86972	F1DZ-7F194A
422C	Clutch Hub, Intermediate (1.580" Tall)	1	88-93	86572A	E8DZ-7B067A
422C	Clutch Hub, Intermediate (1.280" Tall)	1	94-03	86572B	F3DZ-7B067A
422C	Clutch Hub, Intermediate (1.750" Tall)	1	94-03	86572C	1F1Z-7B067AA
430C	Reverse	1	86-03	86556	E6DZ-7F341A
432C	Piston, Reverse Clutch	1	86-03	86966	E6DZ-7E005A
506D	Low w/ Sun Gear (no Slotted Holes)	1	86-03	86559	F6DZ-7A626AA
506D	Low w/ Sun Gear (w/ 3 Slotted Holes)	1	92-03	86559A	F6DZ-7A626AA
N.I.	Ring, Direct Piston (use w/ A86965B)	1	94-03	86548H	F5DZ-7G448AA
PLANETS & COMPONENTS					
450C	Front (w/ Bearing Inside of Shaft) (Sun Gear Has 1 Bushing Inside) Retros	1	86-03	86582B	F5DZ-7A398BA
456C	Rear Planet (33 Spline)	1	86-01	86584	F5DZ-7D006BA
456C	Rear Planet (45 Spline)	1	01-03	86584C	N.L.
500D	Ring Gear, Rear Planet	1	86-03	86594	E6DZ-7A153A
526D	Ring Gear, Final Drive (74T, 17 Lugs) (30T Sun Gear Type)	1	86-01	86598	E6DZ-7F343A
526D	Ring Gear, Final Drive (71T, 17 Lugs) (29T Sun Gear Type)	1	01-03	86598A	N.L.
SUN GEARS					
524D	Sun Gear, Final Drive Planet (30T, 33 Splines)	1	86-01	86618	E6DZ-7F342A
524D	Sun Gear, Final Drive Planet (30T, 45 Splines)	1	2000	86618A	N.L.
524D	Sun Gear, Final Drive Planet (29T, 45 Splines)	1	01-03	86618B	2F2Z-4207CA
ONE WAY CLUTCHES					
314B	Sprag, Low Clutch	1	86-03	86658A	F3DP7G206BA
316B	Outer Race, Overrun Clutch (.600" Thick, 52T)	1	86-03	86669	E6DZ-7D171A
316B	Outer Race, Overrun Clutch (.720" Thick, 57T)	1	86-03	86669A	F3DZ-7D171AB
338B	Inner Race, Direct Overrun Clutch (6 Lug)	1	86-03	86666	E6DZ-7G156A
338B	Inner Race, Direct Overrun Clutch (36 Lug)	1	86-03	86666A	F5DZ-7G156A
340B	Roller Clutch, Direct (.500" Blue Plastic)	1	86-03	86656	E6DZ-7A089B
340B	Roller Clutch, Direct (.590" Gray Plastic)	1	93-03	86656A	F3DZ-7A089B
SHELLS & SUPPORTS					
426C	Shell, w/ Front Sun Gear (w/ 6 Drive Lugs, 1 Bushing)	1	86-03	86620AA	F4DZ-7D064BA
426C	Shell, w/ Front Sun Gear (w/ 36 Drive Lugs, 1 Bushing)	1	86-03	86620B	F5DZ-7D064A

ILL.		Qty.	Year	Part #	Ref. #
SHAFTS					
176A	Pump Shaft	1	86-03	86671	E6SP7R190AB
190A	Turbine Shaft (23 Splines on Converter End) (.875" Long Splines)	1	86-03	86673A	N.L.
190A	Turbine Shaft (25 Splines on Converter End)	1	L93-03	86673B	N.L.
518D	Output Shaft, 18" Long (35 Spline on Differential End)	1	86-03	86678	E6DZ-7060A
VALVE BODIES & GOVERNORS					
146A	Valve Body	1	1991	86740-6	N.L.
146A	Valve Body	1	1992	86740-7	N.L.
146A	Valve Body Cast F4 (Exc. 97 Lincoln) (3 Ohm)	1	93-98	86740-1	N.L.
146A	Valve Body Cast F4 (Incl 97 Lincoln) (14 Ohm)	1	97-98	86740-4	N.L.
146A	Valve Body Cast XF, YF	1	98-03	86740-5	N.L.
590D	Governor Assembly, AXOD	1	86-03	86680	E6DZ-7C053A
590D	Governor Assembly, AXODE (AX4S) (Speed Sensor Drive)	1	86-03	86680A	E8DZ-7C053B
590D	Governor Assembly, AXODE (AX4S) w/ 13T Plastic Gear	1	86-03	86680B	F68Z-7G176AA
592D	Gear, Governor Drive (Yellow Plastic)	1	86-03	86683	E7DZ-7G237A
DIFFERENTIALS					
512D	Support, Differential (1 Bushing Type, without seal design)	1	86-92	86724A	E6DZ-7A130A
512D	Support, Differential (1 Bushing Type, with seal design)	1	93-03	86724B	XF2Z-7A130AA
528D	Differential (Less Speed-O-Gear) (30T Sun Gear Type)	1	95-01	86715	E6DZ-7F465A
528D	Differential (Less Speed-O-Gear) (29T Sun Gear Type)	1	01-03	86715A	N.L.
CHAINS AND SPROCKETS					
180A	Chain, .750" Wide Sprocket, 86 Rocker Pins	1	93-03	86700HA	4F1Z-7G249AA
180A	Chain, .750" Wide Sprocket, 86 Round Pins	1	86-03	86700	E6DZ-7G249A
180A	Chain, .750" Wide Sprocket, 88 Round Pins	1	96-03	86700G	F68Z-7G249A
180A	Chain, .875" Wide Sprocket, 86 Round Pins	1	86-88	86700A	E8DZ-7G249A
212A	Sprocket Support	1	86-03	86713	E6DZ-7F203B
N.I.	Sprocket Kit (38T / 35T) w/ Turbine (Round Pin) AXODE (AX4S)	1	91-93	86710GAK	N.L.
N.I.	Sprocket Kit (38T / 35T) w/ Turbine (Rocker Pin) AXODE (AX4S)	1	94-03	86710GCK	N.L.
N.I.	Sprocket Kit (34T / 39T) w/ Turbine	1	95-03	86710HAK	N.L.
CASES/HOUSINGS & COMPONENTS					
100A	Pan, Side (Valve Body Cover)	1	86-03	86766	E6DZ-7G004A
166A	Case Cover (AXODE Cast # RF-F3)	1	93-03	86755BB	N.L.
166A	Case Cover (AX4S Cast # F6DP-7G)	1	96-99	86755CA	N.L.
166A	Case Cover (AX4S Cast # RF-XF2P)	1	99-Up	86755CB	N.L.
604E	Pan, Bottom (All Exc. SHO)	1	86-03	86765	E6DZ-7A194A
SNAP RINGS					
320B	Forward, Direct, & Intermediate .067" (AX4S)	1	86-03	86878A	E8DZ-7D483B
320B	Forward, Direct, & Intermediate .078" (AX4S)	1	86-03	86878B	F8DZ-7D483AC
320B	Forward, Direct, & Intermediate .092" (AX4S)	1	86-03	86878C	N.L.
320B	Forward, Direct, & Intermediate .111" (AX4S)	1	86-03	86878E	F8DZ-7D483AF
444C	Retaining Ring, Rear Ring Gear (Prevents Ring Pop Out)	1	86-03	S86882	96730-RR
MISCELLANEOUS COMPONENTS					
174A	Cooler Line Fitting, 18mm (Teckpak)	2	91-03	86996	E1DZ-7D273A
174A	Clip, Cooler Line Retainer For 18mm Fittings	2	86-03	T86996C	N.L.
174A	Retainer, For 18mm Fittings (Plastic)	2	86-03	T76496C	S-190
174A	Fitting, 3/8" Quick Connect (AX4S)	1	86-03	86996H	F7DZ-7D273AA
SERVOS & ACCUMULATORS					
542D	Piston, 1-2 Accumulator	1	86-03	86927	96513-K
548D	Spring, 1-2 Accumulator 3.0L (Outer) (Yellow)	1	86-03	86926	E6DZ-76267A
548D	Spring, 1-2 Accumulator 3.8L (Outer) (Tan/ Brown)	1	86-03	86926A	E8DZ-7G267A
550D	Spring, 1-2 Accumulator (Inner) (Yellow)	1	86-03	86929	E6DZ-7G326A
550D	Spring, 1-2 Accumulator (Inner) (Brown/ Purple)	1	86-03	86929A	E8DZ-7G326A
550D	Spring, 1-2 Accumulator (Inner) (Pink)	1	86-03	86929C	E8DZ-7G358A
552D	Piston, 3-4 Accumulator	1	86-03	86937	96512-K
558D	Spring, 3-4 Accumulator (Outer) (Green)	1	86-03	86936	E6DZ7G266A
558D	Spring, 3-4 Accumulator (Outer) (White)	1	86-03	86936A	F8DZ-7G266AA
560D	Spring, 3-4 Accumulator (Inner) (Green)	1	86-03	86939	E6DZ-7F288A
562D	Piston, Neutral Drive Accumulator	1	86-03	86952	96511K
566D	Pin, 1-2, 3-4, & ND Accumulator	3-4	86-03	86928	E602-7G094A
568E	Spring, Neutral Drive Accumulator (Outer)	1	86-03	86951	E6DZ-7G30A

ILL.		Qty.	Year	Part #	Ref. #
SERVOS & ACCUMULATORS (Cont.)					
570E	Spring, Neutral Drive Accumulator (Inner)	1	86-03	86954	E6DZ-7G301A
608E	Spring Retaining Clips, 1-2 Servo Pin (5 Per Kit)	1	86-03	86903-5	96945R
612E	Pin, Overdrive Servo (No Groove)	1	86-03	86903	E6DZ-7F203A
614E	Piston, Overdrive Servo	1	86-97	86902	F3DP7G244AA
614E	Piston, Overdrive Servo	1	98-03	86902A	F3DZ-7F200A
616E	Spring, Low/ Intermediate Servo	1	86-03	86906	96995A
620E	Pin, Low/ Intermediate Servo (No Groove)	1	86-03	86908	E6DZ-7D190A
626E	Piston, Low/ Intermediate Servo	1	86-03	86907	96728
N.I.	Cover, Overdrive Servo	1	86-03	86904	N.L.
N.I.	Servo Assembly, Low/ Intermediate	1	86-03	86905	N.L.
N.I.	Retainer, Low/ Intermediate Servo Cushion	1	86-03	86906-5A	96728-01
TECHNICAL MANUALS					
N.I.	Tech Manual, AXOD	1	86-90	86400	83AXODTM
N.I.	Tech Manual, AXODE (AX4S)	1	91-03	86400E	83AXODETM
N.I.	Tech Manual, AXOD, AXODE (AX4S) Update Handbook	1	86-03	86400EH	AXODETM-U1
N.I.	Tech Manual, AXODE (AX4S) Rebuild Procedures (Ford)	1	91-03	86400EA	ATM-AX4S
N.I.	Tech Manual, AXODE (AX4S) Book 1 (Ford)	1	91-03	86400EB	ATM-AX4S1
TOOLS					
N.I.	Channel Plate Sleeve	1	86-03	T-2495-SL	N.L.
N.I.	Front Clutch Loading Tool	1	86-03	T-2402	N.L.
N.I.	Lip Seal Installer / Protector Kit	1	86-03	T-2400	N.L.
N.I.	Valve & Pump Shaft Body Alignment Guide Pins	1	86-03	T-2407	N.L.

Notes

TK TOLEDO TRANS-KIT · SEAL AFTERMARKET PRODUCTS your source for engineered solutions · BRYCO · ProSELECT · RoadMaster

PRODUCT ANNOUNCEMENT

Piston Kit AX4S Pistons 1996-Up

Seal Aftermarket Products has updated the AX4S Piston Kits covering 1996-Up.
Please call your Sales Representative for pricing & kit availability.

86960K
Piston Kit AXODE AX4S 1996-98 [5 Pistons]



86960AK
Piston Kit AX4S 1998-Up [4 Pistons]





Rebuild Kits Available

86002EP - Overhaul Kit AXODE AX4S (With Pistons) 1991-98
86004EAP - Master L/Steels Kit AXODE AX4S (With Pistons) 1992-98
86006EAP - Master W/Steels Kit AXODE AX4S (With Pistons) 1992-98 (Fiber)
86002EBWP - Overhaul Kit AX4S (With Pistons) 1999-Up (Molded Pan Gasket)
86004EBWP - Master L/Steels Kit AX4S (With Pistons) 1999-Up (Molded Gasket)
86006EBWP - Master W/Steels Kit AX4S (With Pistons) 1999-Up (Molded Gasket)

Release Date 8/6/2014

Sales Policy: All shipments are FCA Pembroke Park. Price and Availability subject to change
B000017
© 2014 Seal Aftermarket Products LLC. ALL RIGHTS RESERVED. Possession of price list does not constitute offer to sell
Disclaimer - All information has been checked for accuracy, however no liability can be assumed for errors and omissions

Seal Aftermarket Products LLC · 2315 SW 32nd Avenue · Pembroke Park FL 33023 · [P] (800) 582-2760 · [F] 954-364-2401 · www.sealaftermarketproducts.com

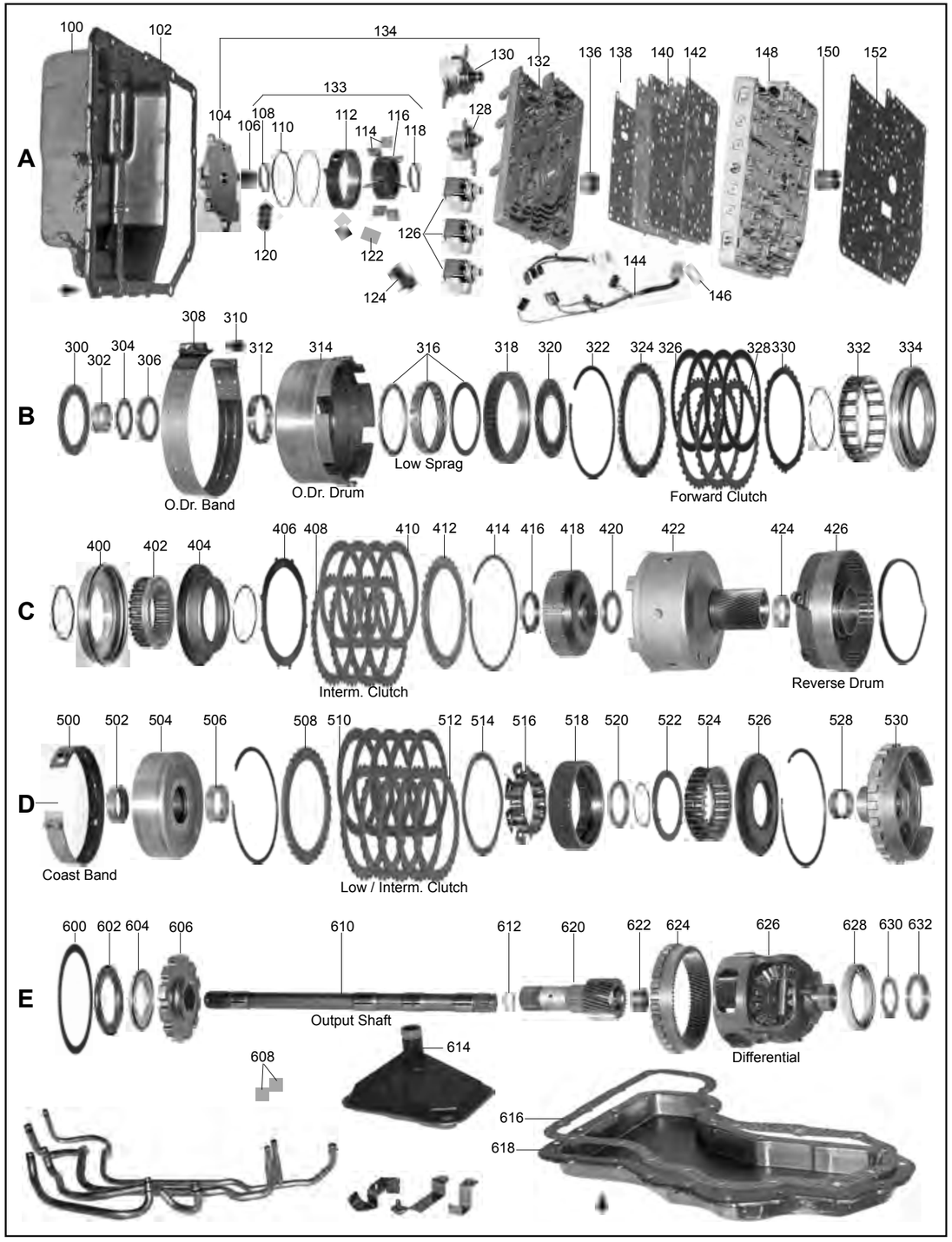
A
B
C
D
E
100
102
104
106
108
110
112
114
116
118
120
122
124
126
128
130
132
133
134
136
138
140
142
144
146
148
150
152
300
302
304
306
308
310
312
314
316
318
320
322
324
326
328
330
332
334
O.Dr. Band
O.Dr. Drum
Low Sprag
Forward Clutch
400
402
404
406
408
410
412
414
416
418
420
422
424
426
Interm. Clutch
Reverse Drum
500
502
504
506
508
510
512
514
516
518
520
522
524
526
528
530
Coast Band
Low / Interm. Clutch
600
602
604
606
608
610
612
614
616
618
620
622
624
626
628
630
632
Output Shaft
Differential

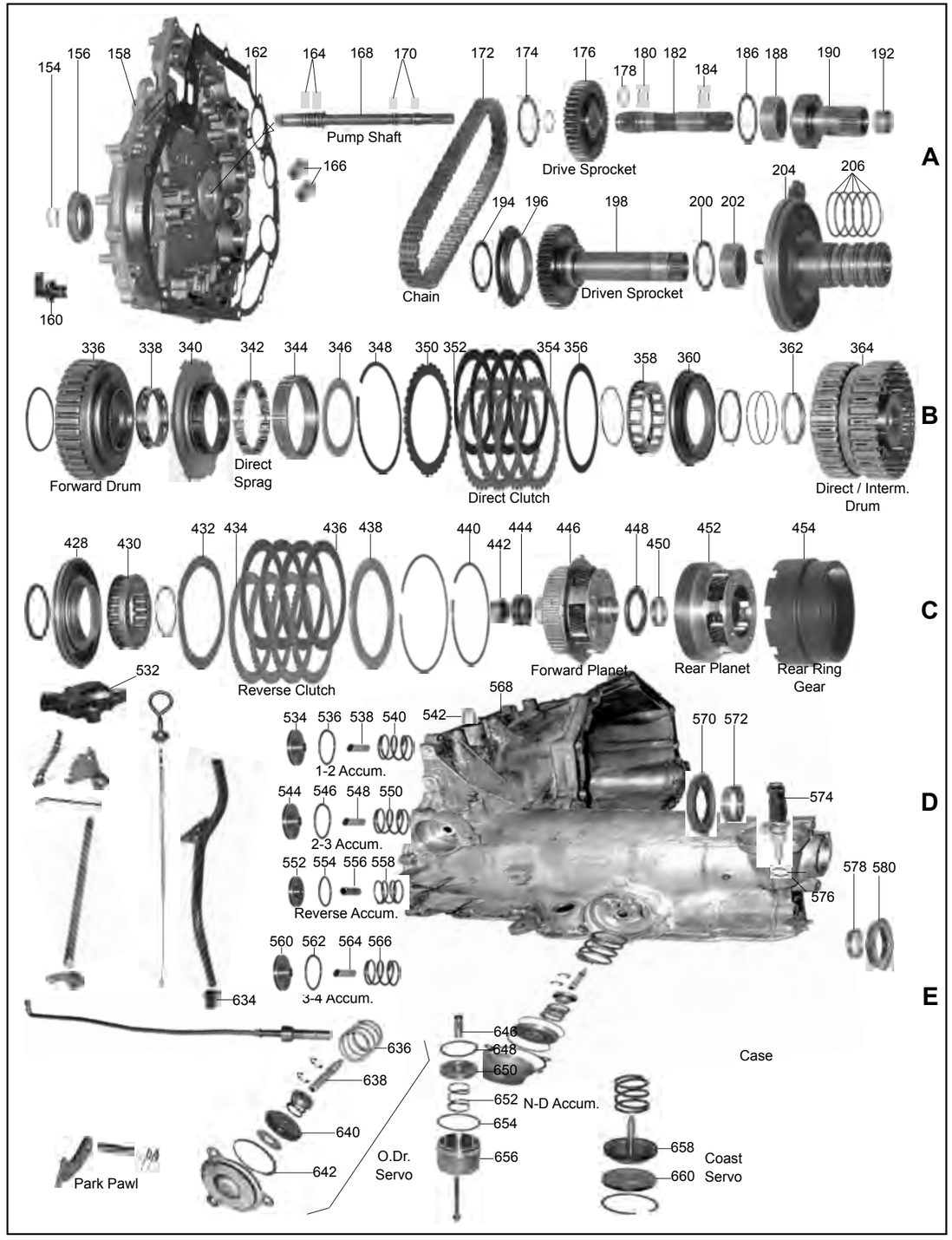
A
B
C
D
E
154
156
158
160
162
164
166
168
170
172
174
176
178
180
182
184
186
188
190
192
194
196
198
200
202
204
206
Pump Shaft
Drive Sprocket
Chain
Driven Sprocket
336
338
340
342
344
346
348
350
352
354
356
358
360
362
364
Forward Drum
Direct Sprag
Direct Clutch
Direct / Interm. Drum
428
430
432
434
436
438
440
442
444
446
448
450
452
454
Reverse Clutch
Forward Planet
Rear Planet
Rear Ring Gear
532
534
536
538
540
542
544
546
548
550
552
554
556
558
560
562
564
566
568
570
572
574
576
578
580
1-2 Accum.
2-3 Accum.
Reverse Accum.
3-4 Accum.
634
636
638
640
642
646
648
650
652
654
656
658
660
Park Pawl
O.Dr. Servo
N-D Accum.
Coast Servo
Case

ILL.		Qty.	Year	Part #	Ref. #
DELUXE KITS (SUPER KITS WITH STEELS)					
N.I.	AX4N w/ 86010E Filter (w/ Pistons)	1	95-99	86008HPW	N.L.
N.I.	AX4N w/ 86010H Filter (w/ Pistons)	1	95-99	86008HAPW	N.L.
N.I.	AX4N, 4F50N (w/ Pistons)	1	00-03	86008HBPW	N.L.
N.I.	AX4N, 4F50N (w/ Pistons)	1	04-Up	86008HCPW	N.L.
MASTER OVERHAUL KITS (WITH STEELS)					
N.I.	AX4N (w/ Pistons)	1	95-99	86006HPW	N.L.
N.I.	AX4N, 4F50N (w/ Pistons)	1	00-03	86006HBPW	N.L.
N.I.	AX4N, 4F50N (w/ Pistons)	1	04-Up	86006HCPW	N.L.
MASTER OVERHAUL KITS (LESS STEELS)					
N.I.	AX4N (w/ Pistons)	1	95-99	86004HPW	N.L.
N.I.	AX4N, 4F50N (w/ Pistons)	1	00-03	86004HBPW	N.L.
N.I.	AX4N, 4F50N (w/ Pistons)	1	04-Up	86004HCPW	N.L.
OVERHAUL KITS (WITH RINGS AND SEALS)					
N.I.	AX4N (w/o Pistons)	1	95-99	86002HW	N.L.
N.I.	AX4N, 4F50N (w/o Pistons)	1	00-03	86002HBW	N.L.
N.I.	AX4N, 4F50N (w/o Pistons)	1	04-Up	86002HCW	N.L.
BONDED PISTONS					
N.I.	Piston Kit	1	95-Up	86960K	N.L.
334B	Piston, Forward Clutch (Bonded) (.830" Height)	1	95-Up	86964H	F8DZ-7A262AB
334B	Piston, Forward Clutch (Bonded) (.975" Height)	1	95-Up	86964HA	F88Z-7A262AA
360B	Piston, Direct Clutch	1	95-Up	86965B	F4DP-7F254BA
400C	Piston, Intermediate Clutch (Bonded)	1	95-Up	86962H	F88Z-7E005AA
404C	Piston Retainer, Intermediate Clutch Balance	1	95-Up	86963H	F4DZ-7H185A
526D	Piston, Low/ Intermediate Clutch (Bonded)	1	95-Up	86967H	F4DP-7H290A
GASKETS & O-RINGS					
102A	Gasket, Side Cover	1	1995	86301H	F5DZ-7F396A
102A	Gasket, Side Cover (Bonded Gasket)	1	96-99	86301HW	F6DZ-7F396B
102A	Gasket, Side Cover (Steel Cover)	1	00-Up	86301JW	YF1Z-7F396BA
102A	Gasket, Side Cover (Aluminum Cover)	1	00-Up	86301KW	YF1Z-7F396AA
138A	Gasket, Pump Plate to Pump (No Stripe) (AX4N)	1	95-97	86310AH	F4DZ-7G331A
138A	Gasket, Pump Plate to Pump (Orange Stripe) (AX4N)	1	98-03	86310AHB	F5DZ-7A136AB
138A	Gasket, Pump Plate to Pump (White Stripe) (4F50N)	1	04-Up	86310AHC	4F1Z-7G331AA
138A	Gasket, Pump Plate to Valve Body (No Stripe) (AX4N)	1	95-97	86310BH	F5DZ-7A139A
138A	Gasket, Pump Plate to Valve Body (Orange Stripe) (AX4N)	1	98-03	86310BHB	N.L.
138A	Gasket, Pump Plate to Valve Body (Blue Stripe) (4F50N)	1	04-Up	86310BHC	AF1Z-7A136AA
152A	Bonded Valve Body Gasket, # No Stamp (Taurus, Sable w/ 3.0L)	1	94-95	86320HA	F5DZ-7Z490A
152A	Bonded Valve Body Gasket, # 11	1	95-97	86320HB	F5OZ-7Z490A
152A	Bonded Valve Body Gasket, # 13 or # 14	1	96-97	86320HC	F6DZ-7Z490B
152A	Bonded Valve Body Gasket, # 15	1	96-97	86320HD	F6DZ-7Z490D
152A	Bonded Valve Body Gasket, # 84	1	1998	86320HG	F8OZ-7Z490AA
152A	Bonded Valve Body Gasket, # 85	1	98-99	86320HH	F8DZ-7Z490CA
152A	Bonded Valve Body Gasket, # 86	1	98-99	86320HJ	F8DZ-7Z490AA
152A	Bonded Valve Body Gasket, # 87	1	98-99	86320HM	F8DZ-7Z490BA
152A	Bonded Valve Body Gasket, # 90 or #03	1	99-00	86320HN	XF3Z-7Z490AA
152A	Bonded Valve Body Gasket, # 04	1	01-02	86320HP	1F3Z-7Z490AA
152A	Bonded Valve Body Gasket, # 05	1	01-03	86320HQ	1FRZ-7Z490CA
152A	Bonded Valve Body Gasket, # 01	1	04-Up	86320HR	4F1Z-7Z490AA
152A	Gasket, VB Plate to Case Cover	1	95-97	86320H	N.L.
152A	Gasket, VB Plate to Case Cover	1	98-03	86320J	N.L.
152A	Gasket, VB Plate to Case Cover	1	04-Up	86320L	N.L.
152A	Gasket, VB Plate to Valve Body	1	95-97	86321H	N.L.
152A	Gasket, VB Plate to Valve Body	1	98-03	86321J	N.L.
152A	Gasket, VB Plate to Valve Body	1	04-Up	86321L	4F1Z-7Z490AA
162A	Gasket, Case Cover to Case (AX4N)	1	95-99	86324H	F8DZ-7G303AA
162A	Gasket, Case Cover to Case (AX4N)	1	00-03	86324HA	YF3Z-7G303AA
162A	Gasket, Case Cover to Case (4F50N)	1	04-Up	86324HB	4F1Z-7G303CA
184A	O-Ring, Turbine Shaft	1	95-Up	86380H	F0TZ-6749B
562D	Lathe Cut Seal, 3-4 Accumulator Piston	1	95-Up	86354	E6DZ-7F248A
616E	Gasket, Bottom Pan	1	1995	86300H	F5DZ-7A191A
616E	Gasket, Bottom Pan (Bonded Gasket)	1	96-Up	86300HW	F6DZ-7A191B
642E	Seal, Overdrive Servo Cover (Thin Wall)	1	95-Up	86367	E6DZ-7D024A

ILL.		Qty.	Year	Part #	Ref. #
METAL CLAD SEALS					
156A	Axle (Both) (Metal Case)	2	95-01	86076	E6DZ-1177A
156A	Axle, (Both) (Rubber Coated Case)	2	02-Up	86076A	2F1Z-1177AA
570D	Front	1	95-Up	86070	E6DZ-7F401A
N.I.	Main Control Shaft	1	95-Up	86074	E6DZ-7F337A
N.I.	Pump Drive	1	95-Up	86079	E6SP-7N089
SEALING RINGS & KITS					
N.I.	Ring Kit (Teflon)	1	95-Up	86175TK	N.L.
110A	Pump Slide 3.079"OD (Metal)	1	95-Up	86176	E6DZ-7G281A
164A	Pump Shaft (Rear) .833"OD (Teflon)	2	95-Up	86177BT	E6DZ-7G092A
170A	Pump Shaft (Front) .693"OD (Teflon)	2	95-Up	86177AT	E6DZ-7G093A
206A	Forward & Direct 2.466"OD (Metal)	5	95-Up	86179	E6DZ-7D019A
206A	Forward & Direct 2.466"OD (Teflon)	5	95-Up	86179T	N.L.
FRICTION PLATES					
326B	Forward	4	95-Up	86108A	F3DP-7E311AC
352B	Direct	4-5	95-Up	86106	E8DP-7B164BA
352B	Direct (Hi-Energy) (use w/ Kolene Steels)	4-5	95-Up	86106H	XF2Z-7B164CA
352B	Direct (Hi-Energy) 2nd Design (use w/ Non Kolene Steels) (2nd Design)	4-5	95-Up	86106A	XF2Z-7B164CA
410C	Intermediate	4-5	95-Up	86106	E8DP-7B164BA
410C	Intermediate (Hi-Energy) (use w/ Kolene Steels)	5	95-Up	86106H	XF2Z-7B164CA
410C	Intermediate (Hi-Energy) (use w/ Non Kolene Steels) (2nd Design)	5	95-Up	86106A	XF2Z-7B164CA
436C	Reverse	4-5	95-Up	86110	E6SP-7E312AB
510D	Low/ Intermediate	5	95-Up	86114H	F6DZ-7B164A
STEEL PLATES					
328B	Forward	4	95-Up	86128	XF1Z-7B442BA
328B	Forward (Kolene)	4	95-Up	86128K	N.L.
330B	Cushion Spring, Forward (.083")	1	95-Up	86129H	F2DZ-7E085A
354B	Direct (.070")	5	95-Up	86126	E6DZ-7B442A
354B	Direct (.070") (Kolene)	5	95-Up	86126B	XF2Z-7B442AA
354B	Direct (.095")	4-5	95-Up	86126C	F7DZ-7B442BA
354B	Direct (.095") (Kolene)	4-5	95-Up	86126H	F7DZ-7B442BA
406C	Cushion Spring, Intermediate (.071", 8T)	1	95-Up	86125E	F5OZ-7E085BA
408C	Intermediate (.070")	5	95-Up	86126	E6DZ-7B442A
408C	Intermediate (.070") (Kolene)	5	95-Up	86126B	XF2Z-7B442AA
408C	Intermediate (.095")	4-5	95-Up	86126C	F7DZ-7B442BA
408C	Intermediate (.095") (Kolene)	4-5	95-Up	86126H	F7DZ-7B442BA
432C	Cushion Spring, Reverse	1	95-Up	86854	E6DZ-7E085A
434C	Reverse (.059")	4-5	98-Up	86130H	69715
434C	Reverse (.068")	4	95-Up	86130	XF1Z-7B442AA
512D	Low/ Intermediate	5	95-Up	86134H	F5DZ-7B442A
514D	Cushion Spring, Low/ Intermediate	1	95-Up	86857H	F5DZ-7E085A
N.I.	Steel Module	1	95-Up	86139H	N.L.
PRESSURE PLATES					
324B	Forward (.170")	1	95-Up	86148HA	6F1Z-7B066A
324B	Forward (.278")	1	95-Up	86148HC	F2DZ-7B066A
350B	Direct (.156")	1	95-Up	86146	F3DZ-7B066A
350B	Direct (.130")	1	95-Up	86146H	F5DZ-7B066A
438C	Reverse	1	95-Up	86150	E6DZ-7B066D
508D	Low & Intermediate (.196")	1	95-Up	86154H	N.L.
508D	Low & Intermediate (.330")	1	95-Up	86154HA	N.L.
FILTERS					
614E	Filter w/ Orange Lip Seal	1	95-Up	86010E	F3DP7G186AB
614E	Filter w/ Green Lip Seal	1	95-Up	86010H	F6DZ-7A098A
N.I.	Screen, By-Pass Solenoid	1	95-Up	86016	E6DZ-7G308A
N.I.	Screen, Valve Body (Square)	1	95-Up	86016A	N.L.
FILTER KITS					
N.I.	Filter Kit w/ .490" Orange Lip Seal (Bonded Gasket)	1	96-Up	86011HW	N.L.
N.I.	Filter Kit w/ .420" Green Lip Seal (Bonded Gasket)	1	96-Up	86011HAW	N.L.

ILL.		Qty.	Year	Part #	Ref. #
BANDS					
308B	Overdrive	1	95-Up	86020	E6DZ-7F196A
500D	Coast (1" Wide)	1	95-Up	86026H	F4DP-7A162BA
BUSHINGS					
N.I.	Bushing Kit	1	95-Up	86030H	N.L.
136A	Replaces Pump Needle Bearing	1	95-Up	86209B	N.L.
192A	Converter Reactor	1	95-Up	64047	8631903
302B	Driven Sprocket Support	1	95-Up	86045	E6SP-7G170AA
312B	Overdrive Drum (w/ 6 Slots)	1	95-Up	86038	E8DP-7G210AA
338B	Inner Sprag Race (.500" Wide)	1	95-Up	86044	E6SP-7G138AB
338B	Inner Sprag Race (.625" Wide)	1	95-Up	86044A	F3SP-7G13AA
362B	Direct/Intermediate Clutch Drum	1	95-Up	86046	E6SP-7G123AA
424C	Sun Shell (1.613"OD)	1	95-Up	86051A	N.L.
450C	Rear Planet	1	95-Up	86058	E6SP-7B375A
506D	Rear Drum w/ Sun Gear (1.974"OD)	1	95-96	86061	E6SP-7D065AA
528D	Differential Support (Wide)	1	95-Up	86060H	F5DP-7A132AA
572D	Converter Hub	1	95-Up	86031	E6SP-7N805AB
578D	Rear Case, Final Drive Output Support	1	95-Up	86064	E6SP-7E110AA
622E	Final Drive Sun Gear	1	95-Up	86056	E6SP-7G344AA
THRUST WASHERS/BEARINGS					
WASHERS					
N.I.	Washer Kit (Does Not Include Selective Sprocket Support Washers)	1	95-Up	86200A	N.L.
174A	Drive Sprocket to Case Cover (3 Uneven Spaced Tabs)	1	95-Up	86279	E6DZ-7G099A
174A	Drive Sprocket to Case Cover (3 Even Spaced Tabs)	1	95-Up	86279A	F5DZ-7G099A
186A	Drive Sprocket to Converter Reactor (3 Uneven Spaced Tabs)	1	95-Up	86279	E6DZ-7G099A
186A	Drive Sprocket to Converter Reactor (3 Even Spaced Tabs)	1	95-Up	86279A	F5DZ-7G099A
194A	Driven Gear to Case Cover 3 Tab Plastic	1	95-Up	86280A	F5DZ-7G096A
200A	Driven Sprocket to Direct/Intermediate Support (Plastic)	1	95-Up	86281	E6DZ-7G115A
300B	Driven Sprocket Support to Overdrive Drum .088"	1	95-Up	86214	E6DZ-7D014A
300B	Driven Sprocket Support to Overdrive Drum .098"	1	95-Up	86214A	E6DZ-7D014B
300B	Driven Sprocket Support to Overdrive Drum .107"	1	95-Up	86214B	E6DZ-7D014C
300B	Driven Sprocket Support to Overdrive Drum .117"	1	95-Up	86214C	E6DZ-7D014D
304B	Driven Sprocket Support to Direct/ Intermediate Drum .056"-.062"	1	95-Up	86219	E6DZ-7G273A
304B	Driven Sprocket Support to Direct/ Intermediate Drum .064"-.070"	1	95-Up	86219A	E6DZ-7G273B
304B	Driven Sprocket Support to Direct/ Intermediate Drum .076"-.080"	1	95-Up	86219B	E6DZ-7G273C
304B	Driven Sprocket Support to Direct/ Intermediate Drum .085"-.089"	1	95-Up	86219C	E6DZ-7G273D
320B	Forward Drum to Low Sprag (4 Tab)	1	95-Up	86229A	FD6Z-7A166A
346B	Direct/Intermediate Clutch Drum to Direct Sprag (2 Tab)	1	95-Up	86232	F2DZ-7F369A
522D	Low/ Intermediate Clutch Hub to Low/ Intermediate Spring Retainer (6 tab)	1	95-Up	86258H	N.L.
630E	Differential to Case .064"-.069"	1	95-Up	86293B	F2DZ-7G103C
630E	Differential to Case .061"	1	95-Up	86293C	F2DZ-7G103D
630E	Differential to Case .065"	1	95-Up	86293CA	F2DZ-7G103E
630E	Differential to Case .072"	1	95-Up	86293CC	F2DZ-7G103G
BEARINGS					
136A	Bearing, Pump Shaft (1.002"OD)	1	96-99	86209C	XF2Z-7G184AA
136A	Bearing, Pump Shaft (1.065"OD)	1	00-Up	86209H	XF1Z-7G184AA
188A	Needle Bearing, Converter Reactor (Inner)	1	95-Up	64295	8631186
202A	Needle Bearing, Drive Sprocket Support (Inner)	1	95-Up	86298A	E6DZ-7G247A
306B	Bearing w/ Race, Driven Sprocket Support to Direct/ Intermediate Drum	1	95-Up	36217	E6DZ-7F240A
416C	Bearing w/ Race, Intermediate Hub (Both Sides)	2	95-Up	86235	E6DZ-7C096A
442C	Needle Bearing, Front Planet Shaft (Captured)	1	95-Up	86241	N.L.
444C	Needle Bearing, Front Planet Shaft (Outer)	1	95-Up	86237	N.L.
448C	Bearing w/ Race, Front Planet to Rear Planet	1	95-Up	86238	E6DZ-7G177A
520D	Bearing w/ Race, Rear Sun Gear Drum to Differential Support	1	95-Up	86257H	F5DZ-7G178A
604E	Bearing w/ Race, Differential Support to Parking Gear	1	95-Up	86260H	F5DZ-7F405A
632E	Bearing w/ Race, Differential to Case	1	95-Up	86292	E6DZ-7G112A
N.I.	Bearing w/ Race, Differential to Sun Gear (2.355" OD)	1	95-00	86289	E6DZ-7F404A
N.I.	Bearing w/ Race, Differential to Sun Gear (2.225" OD)	1	01-Up	86289A	1F1Z-7F404AA

ILL.		Qty.	Year	Part #	Ref. #
ELECTRICAL COMPONENTS					
124A	Sensor, TOT/TFT (Transmission Oil Temp)	1	95-Up	86437	F1DZ-7H141A
126A	Solenoid, Shift (1-2, 2-3, 3-4)	3	95-Up	86420	F1DZ-7G484A
128A	Solenoid, Modulated Lock-Up (White)	1	95-96	86425B	F10Y-7G136A
128A	Solenoid, Modulated Lock-Up (Blue)	1	97-Up	86425H	F7OZ-7G136AA
130A	Solenoid, Electronic Pressure Control (EPC)	1	95-Up	86431HA	F8DZ-7G383AB
144A	Wire Harness, Internal (AX4N)	1	95-03	86446HA	F5DZ-7G276A
144A	Wire Harness, Internal (4F50N)	1	04-Up	86446HB	4F1Z-7G276AA
160A	Sensor, Input Speed (TSS) (2 Prong Oval Connector w/ Insert)	1	95-00	86438A	F5DZ-7M101A
160A	Sensor, Input Speed (TSS) (2 Prong Square Connector No Insert)	1	01-Up	86438B	1F1Z-7M101AA
532D	Switch, Manual Lever Position (MLPS) (8 Pin Connector)	1	96-98	86410EA	F5DZ-7F293BA
532D	Switch, Manual Lever Position (MLPS) (10 Pin Connector)	1	98-Up	86410HA	F8DZ-7F293AB
532D	Switch, Manual Lever Position (MLPS) (11 Pin Connector)	1	96-99	86410H	F6DZ-7F293A
N.I.	Sensor, Vehicle Speed (VSS) Cable Drive .876" Diameter	1	95-99	36436	E9TP-9E731AA
N.I.	Sensor, Vehicle Speed (VSS) Cable Drive 1.100" Diameter	1	95-99	86436	F5DZ-9E731AA
N.I.	Sensor, Vehicle Speed (VSS) Gear Driven (20T Gear)	1	95-99	86436H	F5DZ-9E731BA
N.I.	Sensor, Vehicle Speed (VSS) (13" Harness)	1	00-Up	86436HA	YF1Z-7H103AA
N.I.	Repair Kit, Wire Harness (VSS)	1	95-Up	76445C	F2PZ-14A464A
N.I.	Repair Kit, External Wire Harness	1	95-Up	86445EHK	F2PZ-14A464G
VALVE BODY RECALIBRATION KITS					
N.I.	Shift Kit®, AX4N, 4F50N (Transgo®)	1	95-Up	T86165H	SK® AX4N
VALVE BODY COMPONENTS					
N.I.	Check Ball, Valve Body (5/16")	AR	95-Up	76741-5	E7DZ-7E195A
N.I.	Retainer, Valve Body Forward Clutch Control Valve	1	95-Up	86741-4	F8DZ-7F194AA
N.I.	Sleeve, Valve Body to Pump Shaft (Press-In)	1	95-Up	A86741V	96201-18
N.I.	Spring, Capacity Modulator Valve (4F50N)	1	04-Up	86741A-3	N.L.
PUMPS					
134A	Pump (Cast # RF-F4)	1	95-97	86500H	N.L.
134A	Pump (Cast # RF-F8, RF-XF)	1	98-99	86500HA	N.L.
134A	Pump (Cast # RF-XF)	1	00-Up	86500HB	N.L.
PUMP COMPONENTS					
104A	Pump Cover	1	95-Up	86520H	96200-01
108A	Ring, Pump Vane	2	95-Up	86538	E6SP-7G287
112A	Pump Slide	1	95-Up	86534	E6SP-7R194AC
114A	Vane, Pump	7	95-Up	86533	96925
116A	Rotor, Pump	1	95-Up	86532	E6SP-7A146FA
133A	Rotor Kit	1	95-Up	86531	K86880
190A	Converter Reactor (Support) 3 Uneven Spaced Holes	1	1995	86529	E6DZ-7A108A
190A	Converter Reactor (Support) 3 Even Spaced Holes	1	96-Up	86529A	F6DZ-7A108AA
190A	Converter Reactor (Support) (4" Long) (4F50N)	1	04-Up	86529B	N.L.
DRUMS & COMPONENTS					
314B	Overdrive (36 Lugs For Shell)	1	95-Up	86550H	F5DZ-7L669BA
332B	Retainer w/ Springs, Forward Clutch	1	95-Up	86974H	F6DZ-7G299A
334B	Piston, Forward Clutch (Bonded) (.830" Height)	1	95-Up	86964H	F8DZ-7A262AB
334B	Piston, Forward Clutch (Bonded) (.975" Height)	1	95-Up	86964HA	F88Z-7A262AA
336B	Forward (4 Clutch) (Exc. SHO)	1	95-Up	86554H	F5DZ-7A360A
344B	Clutch Hub, Direct Overrun (.830" Thick)	1	95-Up	86575A	N.L.
360B	Piston, Direct Clutch	1	95-Up	86965B	F4DP-7F254BA
364B	Direct & Intermediate (5 Clutch Direct, 5 Clutch Intermediate)	1	95-Up	86552H	F5DZ-7G120A
400C	Piston, Intermediate Clutch (Bonded)	1	95-Up	86962H	F88Z-7E005AA
402C	Retainer w/ Springs, Intermediate Clutch	1	95-Up	86972	F1DZ-7F194A
404C	Piston Retainer, Intermediate Clutch Balance	1	95-Up	86963H	F4DZ-7H185A
418C	Clutch Hub, Intermediate (1.000" Long Clutch Splines) (AX4N)	1	95-Up	86572B	F3DZ-7B067A
418C	Clutch Hub, Intermediate (1.070" Long Clutch Splines) (AX4N)	1	95-Up	86572C	1F1Z-7B067AA
418C	Clutch Hub, Intermediate (1.130" Long Clutch Splines) (AX4N, 4F50N)	1	98-Up	86572D	N.L.
426C	Reverse (.440"OD Oil Hole)	1	95-Up	86556H	N.L.
428C	Piston, Reverse Clutch	1	95-Up	86966	E6DZ-7E005A
504D	Coast w/ Sun Gear	1	95-Up	86559H	F5DZ-7A626A
518D	Clutch Hub & Outer Race, Low/ Intermediate Clutch	1	95-Up	86577H	F5DZ-7A089A
526D	Piston, Low/ Intermediate Clutch (Bonded)	1	95-Up	86967H	F4DP-7H290A
N.I.	Ring, Direct Piston	1	94-03	86548H	F5DZ-7G448AA

ILL.		Qty.	Year	Part #	Ref. #
PLANETS & COMPONENTS					
446C	Planet, Front	1	95-Up	86582H	F4DZ-7A398B
452C	Planet, Rear	1	95-Up	86584H	1F2Z-7D006AA
454C	Ring Gear, Rear	1	95-Up	86594	E6DZ-7A153A
624E	Ring Gear, Final Drive (74T, 25 Lugs) (30T Sun Gear Type)	1	95-98	86598H	ZF2Z-4207BA
624E	Ring Gear, Final Drive (74T, 32 Lugs) (30T Sun Gear Type)	1	98-01	86598HB	N.L.
624E	Ring Gear, Final Drive (71T, 32 Lugs) (29T Sun Gear Type)	1	01-Up	86598HA	N.L.
SUN GEARS					
620E	Sun Gear, Final Drive (29T, 5.250" Long)	1	01-Up	86618HA	N.L.
620E	Sun Gear, Final Drive (30T, 5.250" Long)	1	95-01	86618H	F5DZ-7F342A
ONE WAY CLUTCHES					
316B	Sprag, Low Clutch (30 Elements)	1	95-Up	86658A	F3DP-7G206BA
318B	Outer Race, Overrun Clutch (.720" Thick, 57T)	1	95-Up	86669A	F3DZ-7D171AB
340B	Inner Race, Direct Overrun Clutch (.500" Wide Bushing)	1	95-Up	86666A	F5DZ-7G156A
342B	Roller Clutch, Direct (.590"/Gray Plastic)	1	95-Up	86656A	F3DZ-7A089B
516D	Roller Clutch, Low/ Intermediate 7 Tab	1	95-Up	86652H	7471014
SHELLS & SUPPORTS					
204A	Support, Driven Sprocket w/ Notch (Cast RFF4DP)	1	95-Up	86713H	F68Z7G166A
422C	Shell, w/ Front Sun Gear (w/ 36 Drive Lugs)	1	95-Up	86620B	F5DZ-7D064A
530D	Support, Differential (Low/ Interm Clutch Housing) (Alum.)	1	95-99	86724H	F6DZ-7A130CA
530D	Support, Differential (Low/ Interm Clutch Housing) (Alum.) (Cast RF1F1P)	1	00-Up	86724HA	N.L.
SHAFTS					
168A	Pump Shaft	1	95-Up	86671	E6SP-7R190AB
182A	Turbine Shaft (25 Spline)	1	95-Up	86673B	N.L.
610E	Output Shaft, 19.250" Long (34 Spline on Differential End)	1	95-Up	86678H	N.L.
610E	Output Shaft, 19.250" Long (35 Spline on Differential End)	1	95-Up	86678HA	N.L.
VALVE BODIES & GOVERNORS					
148A	Valve Body (Cast RF-F4)	1	94-98	86740-2	N.L.
148A	Valve Body (Cast RF-F8 or RF-XF1)	1	98-03	86740-3	N.L.
148A	Valve Body (4F50N)	1	04-Up	86740-8	N.L.
DIFFERENTIALS					
626E	Differential Assembly (30T Sun Gear Type)	1	95-01	86715HK	N.L.
626E	Differential Assembly (29T Sun Gear Type) (AX4N)	1	01-Up	86715HAK	N.L.
626E	Differential Assembly (29T Sun Gear Type) (4F50N)	1	01-Up	86715HBK	N.L.
CHAINS AND SPROCKETS					
172A	Chain, .750" Wide Sprocket, 86 Rocker Pins	1	95-Up	86700HA	4F1Z-7G249AA
172A	Chain, .750" Wide Sprocket, 86 Round Pins	1	95-Up	86700	E6DZ-7G249A
172A	Chain, .750" Wide Sprocket, 88 Rocker Pins	1	05-Up	86700HB	N.L.
172A	Chain, .750" Wide Sprocket, 88 Round Pins	1	95-Up	86700G	F68Z-7G249A
172A	Chain, .875" Wide Sprocket, 88 Rocker Pins	1	95-Up	86700H	F50P-7G249AA
176A	Sprocket, Drive (35T) (Narrow, 4.012"OD)	1	95-Up	86705CA	E6DZ-7G129A
176A	Sprocket, Drive (38T) Wide, 4.470" OD)	1	95-Up	86705HF	N.L.
198A	Sprocket, Driven w/ Shaft (39T) (Wide, 4.415"OD)	1	95-Up	86706HD	N.L.
198A	Sprocket, Driven w/ Shaft (39T) (Wide, 4.425" OD)	1	95-Up	86706HG	N.L.
198A	Sprocket, Driven w/ Shaft (39T) (Wide, 4.490" OD)	1	95-Up	86706HF	N.L.
CASES/HOUSINGS & COMPONENTS					
100A	Pan, Side (Valve Body Cover) (Aluminum)	1	00-Up	86766HA	N.L.
158A	Case Cover (Cast # RFF4DP-7G234-BA)	1	95-Up	86755H	N.L.
158A	Case Cover (Cast # RFF6DP-7G234-BA)	1	96-Up	86755HD	N.L.
618E	Pan, Bottom	1	95-Up	86765H	N.L.
N.I.	Case Cover (Cast # RFYF1P-7G234-AC or REF6DP-7G234-AA)	1	01-02	86755HE	N.L.
SNAP RINGS					
322B	Forward, Direct, & Intermediate (.056")	1	95-Up	86878	E8DZ-7D483A
322B	Forward, Direct, & Intermediate (.067")	1	95-Up	86878A	E8DZ-7D483B
322B	Forward, Direct, & Intermediate (.078")	1	95-Up	86878B	F8DZ-7D483AC
322B	Forward, Direct, & Intermediate (.092")	1	95-Up	86878C	N.L.
322B	Forward, Direct, & Intermediate (.101")	1	95-Up	86878D	F8DZ-7D483AE
322B	Forward, Direct, & Intermediate (.111")	1	95-Up	86878E	F8DZ-7D483AF

ILL.		Qty.	Year	Part #	Ref. #
MISCELLANEOUS COMPONENTS					
166A	Cooler Line Fitting, 18mm (Teckpak)	2	95-Up	86996	E1DZ-7D273A
166A	Clip, Cooler Line Retainer For 18mm Fittings	2	95-Up	T86996C	N.L.
166A	Retainer, Cooler Line For 18mm Fittings (Plastic)	2	95-Up	T76496C	S-190
166A	Fitting, 3/8" Quick Connect	1	95-Up	86996H	F7DZ-7D273AA
N.I.	Sleeve, Channel Plate Sleeve	1	95-Up	86755-2	N.L.
SERVOS & ACCUMULATORS					
538D	Pin, Neutral Drive Accumulator (1-2, 2-3, 3-4, Rev)	3-4	95-Up	86928	E602-7G094A
540D	Spring, 1-2 Accumulator (Exc. SHO) (Plain)	2	95-Up	86926H	F5DZ-7G267A
544D	Spring, 2-3 Accumulator (Orange)	1	95-Up	86932H	F5DZ-7F285A
558D	Spring, Reverse Accumulator (Green)	1	95-Up	86946H	F5DZ-7E485A
560D	Piston, 3-4 Accumulator	1	95-Up	86937	N.L.
560D	Piston Kit, Accumulator	1	95-Up	86937K	N.L.
566D	Spring, 3-4 Accumulator (Blue)	1	95-Up	86936H	F5DZ-7G266A
638E	Pin, Overdrive Servo (No Groove)	1	95-Up	86903	E6DZ-7F203A
640E	Piston, Overdrive Servo (Uses 1.050"OD Spring) (95-7/97)	1	95-E97	86902	F3DP-7G244AA
640E	Piston, Overdrive Servo (Uses 1.700"OD Spring) (7/97-Up)	1	L97-Up	86902A	F3DZ-7F200A
658E	Servo, Coast Servo (Bonded)	1	95-Up	86912H	F4DP-7H281A
660E	Cover, Coast Servo (Bonded)	1	95-Up	86914H	F4DP-7H284A
N.I.	Cover, Overdrive Servo	1	95-Up	86904	N.L.
TECHNICAL MANUALS					
N.I.	Tech Manual	1	95-Up	86400H	83-AX4NTM
TOOLS					
N.I.	Servo Bore Tool (Overdrive)	1	99-Up	T-9217	N.L.
N.I.	Servo Bore Tool Sleeve (Overdrive)	1	99-Up	T-9217-SL	N.L.
N.I.	Channel Plate Sleeve Bore Repair Tool	1	86-03	T-2495	N.L.
N.I.	Channel Plate Sleeve	1	86-03	T-2495-SL	N.L.
N.I.	Front Clutch Loading Tool	1	86-03	T-2402	N.L.
N.I.	Valve & Pump Shaft Body Alignment Guide Pins	1	86-03	T-2407	N.L.

Notes

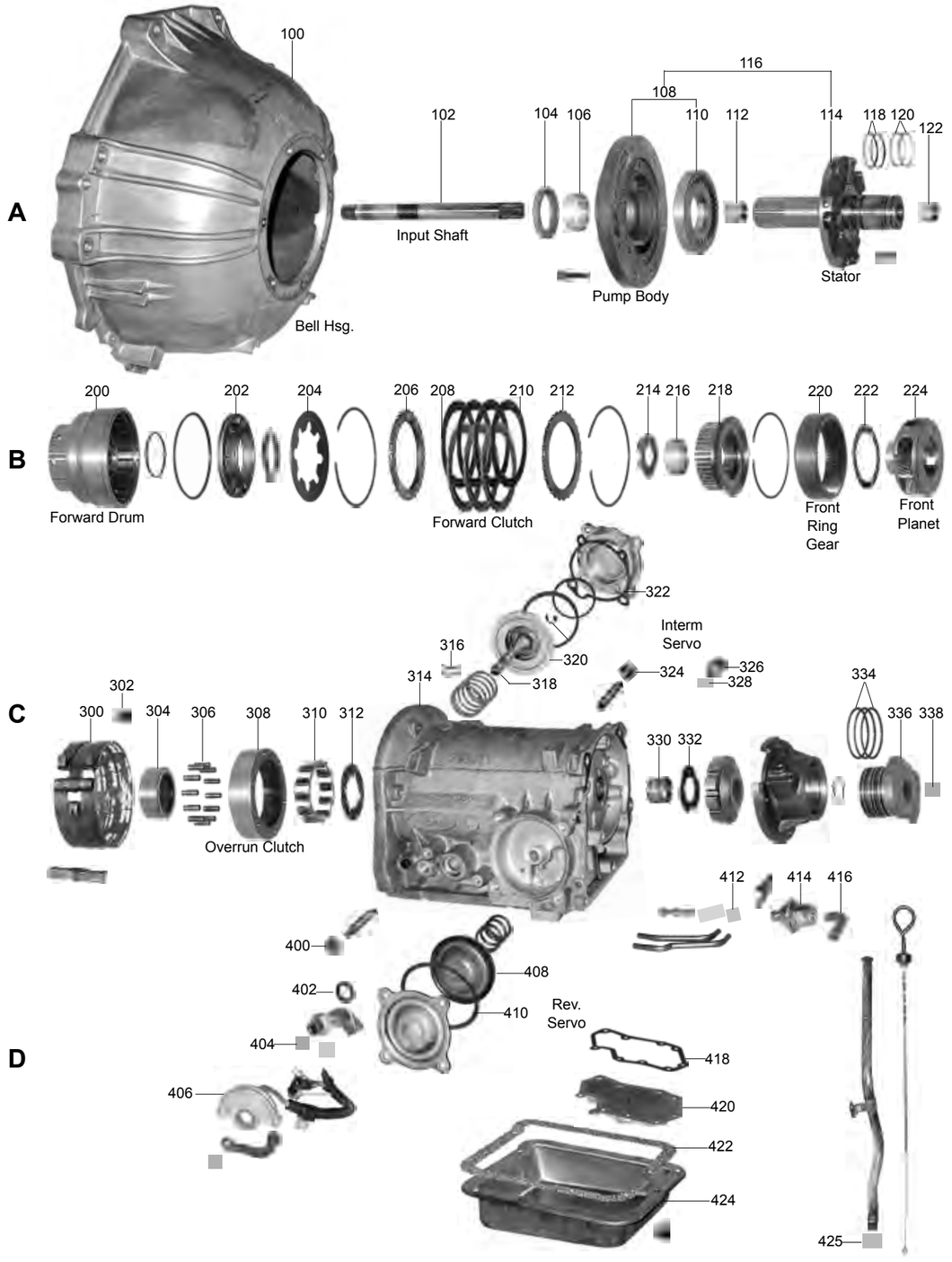
A
B
C
D
100
102
104
106
108
110
112
114
116
118
120
122
Input Shaft
Bell Hsg.
Pump Body
Stator
200
202
204
206
208
210
212
214
216
218
220
222
224
Forward Drum
Forward Clutch
Front Ring Gear
Front Planet
322
Interm Servo
316
320
318
314
324
326
328
334
336
338
300
302
304
306
308
310
312
Overrun Clutch
330
332
412
414
416
400
408
402
410
Rev. Servo
404
418
406
420
422
424
425

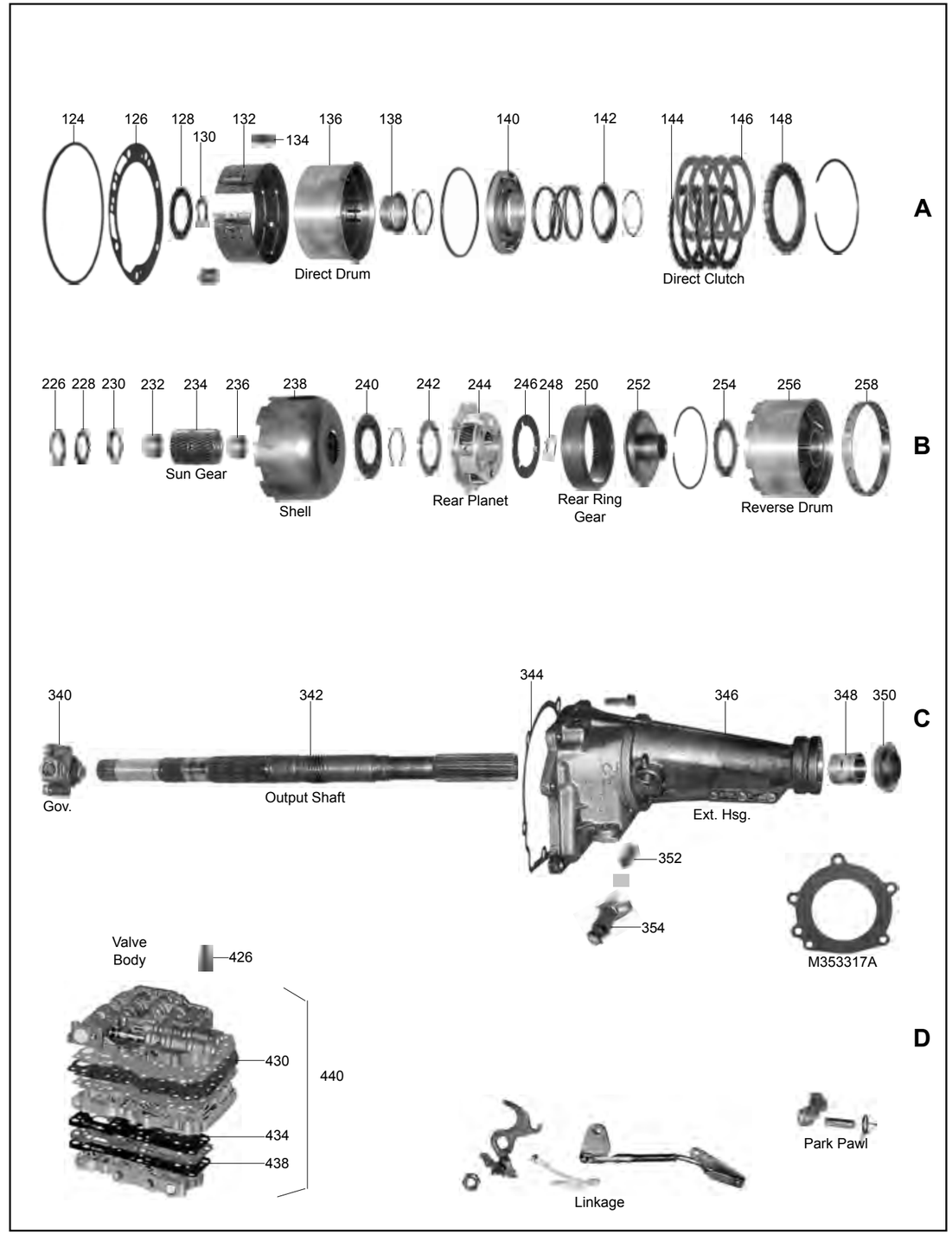
A
B
C
D
124
126
128
130
132
134
136
138
140
142
144
146
148
Direct Drum
Direct Clutch
226
228
230
232
234
236
238
240
242
244
246
248
250
252
254
256
258
Sun Gear
Shell
Rear Planet
Rear Ring Gear
Reverse Drum
340
342
344
346
348
350
Gov.
Output Shaft
Ext. Hsg.
352
354
M353317A
Valve Body
426
430
440
434
438
Linkage
Park Pawl

ILL.		Qty.	Year	Part #	Ref. #
MASTER OVERHAUL KITS (WITH STEELS)					
N.I.	C-4	1	64-69	26006	N.L.
N.I.	C-4	1	70-81	26006C	N.L.
N.I.	C-5	1	82-86	26006E	N.L.
MASTER OVERHAUL KITS (LESS STEELS)					
N.I.	C-4	1	64-69	26004	N.L.
N.I.	C-4	1	70-81	26004C	N.L.
N.I.	C-5	1	82-86	26004E	N.L.
OVERHAUL KITS (WITH RINGS AND SEALS)					
N.I.	C-4	1	64-69	26002	N.L.
N.I.	C-4	1	70-81	26002C	N.L.
N.I.	C-5	1	82-86	26002E	N.L.
GASKETS & O-RINGS					
126A	Gasket, Pump	1	64-86	26310	E1AZ-7A136A
322C	Gasket, Front Servo Cover	1	64-86	26307	C4AZ-7D026C
344C	Gasket, Extension Housing	1	64-86	26305	C4AZ-7086C
422D	Gasket, Bottom Pan	1	64-86	26300	D6OZ-7A191A
METAL CLAD SEALS					
104A	Front (w/o Flange)	1	64-86	36070	C2AZ-7A248A
350C	Rear (Small, w/o Boot)	1	64-86	44074	D5AZ-7052A
350C	Rear (w/ Boot)	1	64-86	26074	D5AZ-7052B
350C	Rear (Large, Truck w/ Bolt-On Yoke)	1	64-86	26074T	C4UZ-7052A
402D	Linkage	1	64-86	36072	C7AZ-7B498A
SEALING RINGS & KITS					
N.I.	Ring Kit	1	64-69	26175K	N.L.
N.I.	Ring Kit	1	70-86	26175CK	N.L.
FRICTION PLATES					
146A	Direct (.078")	3-4	65-86	26106	E2SP-7B164AA
146A	Direct (.078") (High Performance)	3-4	65-86	A26106HP	N.L.
210B	Forward (.061")	4-5	64-86	26108	E2AP7B164AA
210B	Forward (.061") (High Performance)	4-5	64-86	R26108HP	N.L.
STEEL PLATES					
144A	Direct (.078") (C-4)	3-4	64-81	26126	C4AZ-7B442B
144A	Direct (.090") (C-5)	3-4	82-86	26126E	E2SZ-7B442A
208B	Forward (.078")	3-4	64-86	26126	C4AZ-7B442B
MODULATORS					
414D	Screw In (White Stripe)	1	64-72	26160	C4AZ-7A377B
414D	Push In (Single w/ Green Stripe)	1	74-86	26160G	D5AZ-7A377B
414D	Push In (Single w/ Yellow Stripe)	1	73-81	26160Y	D2AZ-7A377A
414D	Push In (Single w/ White Stripe) (C-5)	1	82-86	26160W	E2TZ-7A377A
FILTERS					
338C	Governor Screen	1	64-86	26014	C7AZ-7E242A
420D	C-4	1	65-69	26010A	C5AZ-7A098C
420D	C-4 Flat (Shallow Pan)	1	70-81	26010B	D0DZ-7A098B
420D	C-4 w/ Hump (Deep Pan)	1	74-81	26010C	D4FZ-7A098A
420D	C-4 Bronco (4wd)	1	73-77	26010D	D3BZ-7A098A
420D	C-5 2wd	1	82-86	26010E	E2DZ-7A098A
420D	C-5 4wd	1	82-86	26010EA	E3TZ7AD98A
BANDS					
132A	Intermediate, Flex	1	64-86	26022	D9AZ-7D034C
132A	Intermediate, Flex (Kevlar) (High Performance)	1	64-86	26022K	D9AZ-7D034C
300C	Reverse (Rear)	1	64-86	26024	D0AZ-7D095A

ILL.		Qty.	Year	Part #	Ref. #
BUSHINGS					
N.I.	Bushing Kit	1	64-69	26030	N.L.
N.I.	Bushing Kit	1	70-86	26030B	N.L.
106A	Pump (Babbitt)	1	64-86	26034	C0AP-7B258A
106A	Pump (Bronze)	1	64-86	26034A	C0AP-7B258A
348C	Extension Housing	1	64-86	26066	B3TZ-7A034A
THRUST WASHERS/BEARINGS					
WASHERS					
N.I.	Washer Kit	1	64-69	26200	N.L.
N.I.	Washer Kit (w/o Selectives)	1	70-86	26200A	N.L.
N.I.	Washer Kit (w/ Selectives)	1	70-86	26200C	N.L.
VALVE BODY RECALIBRATION KITS					
N.I.	Shift Kit®, C-4 1965-66, Exc. 64-1/2 Mustang (Transgo®)	1	65-66	T26165A	SK® 4L
N.I.	Shift Kit®, C-4 1967-69 (Transgo®)	1	67-69	T26165C	SK® 4SL
N.I.	Shift Kit®, C-4 1970-72 (Transgo®)	1	70-72	T26165E	SK® 4 71
N.I.	Shift Kit®, C-4 1973-Up & C-5 (Transgo®)	1	73-86	T26165F	SK® C5
N.I.	Reprogramming Kit™, Automatic Shift; HD, Competition/Off-Road/HD (Transgo®)	1	67-69	T26169	47-2
N.I.	Reprogramming Kit™, Automatic Shift; HD, Competition/Off-Road/HD (Transgo®)	1	70-Up	T26169A	40-2
VALVE BODIES & GOVERNORS					
440D	Valve Body C-4	1	70-81	26740-1	N.L.
440D	Valve Body C-5	1	82-86	26740-2	N.L.
SNAP RINGS					
N.I.	Snap Ring, Forward & Direct Clutch (.070"-.080")	1	64-86	26878A	D0AZ-7A577C
N.I.	Snap Ring, Forward & Direct Clutch (.088"-.094")	1	64-86	26878B	D0AZ-7A577D
N.I.	Snap Ring, Forward & Direct Clutch (.102"-.106")	1	64-86	26878C	E1AZ-7A577B
MISCELLANEOUS COMPONENTS					
204B	Spring, Forward Clutch Return	1	64-86	26974	E1AZ-7B070A
306C	Sprag Kit, Spring & Roller Kit	1	64-86	26654K	C4AZ-7D098A
324C	Nut, Band Adjustment (Coarse Thread)	1-2	64-81	26922	380850-S
324C	Nut, Band Adjustment (Fine Thread)	1-2	82-86	26922A	389049-S
408D	Piston, Reverse Servo (Bonded)	1	64-86	26912	D1AZ-7D189A
TECHNICAL MANUALS					
N.I.	Tech Manual, C-4 & C-5	1	64-86	26400	83-C5TM

Notes

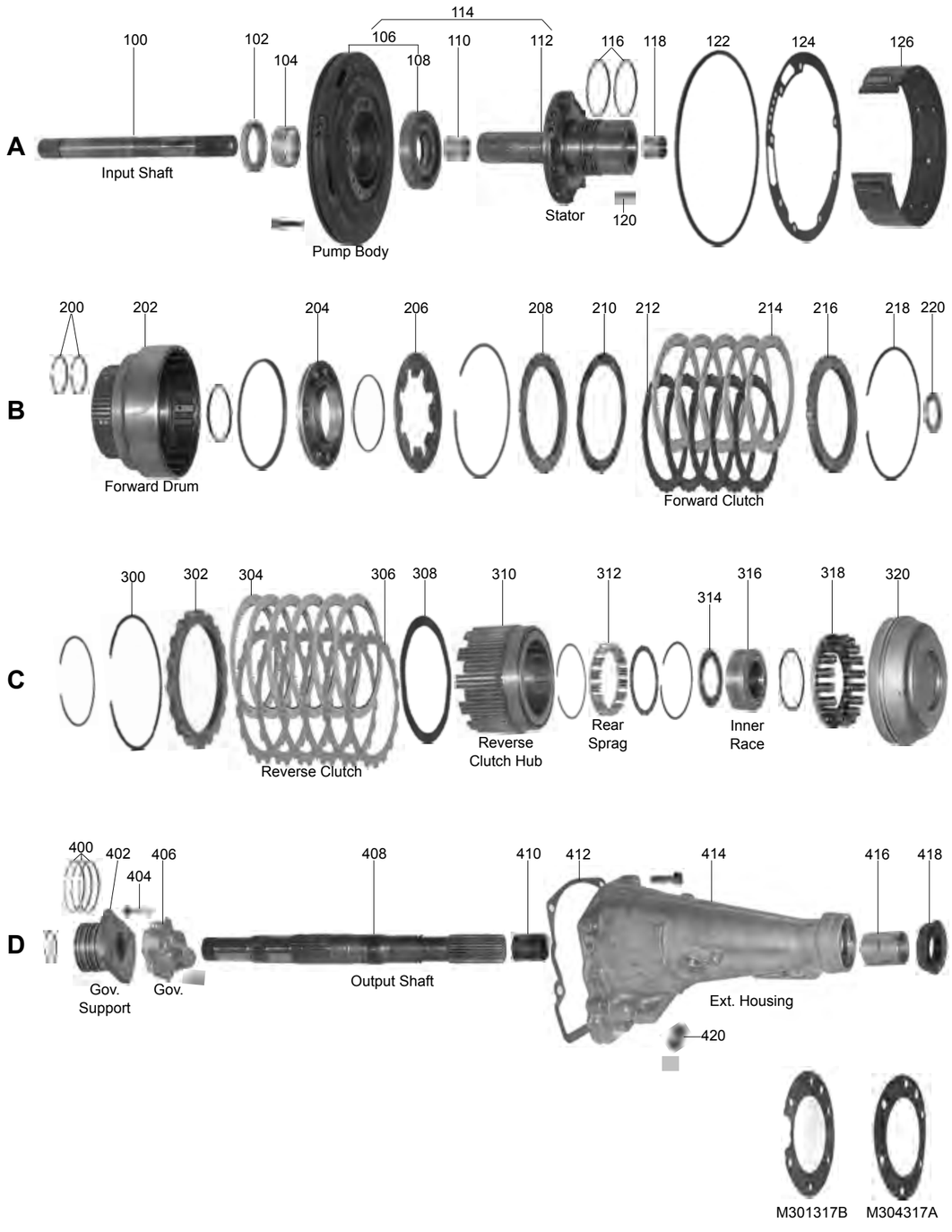
A
100
102
104
106
108
110
112
114
116
118
120
122
124
126
Input Shaft
Pump Body
Stator
B
200
202
204
206
208
210
212
214
216
218
220
Forward Drum
Forward Clutch
C
300
302
304
306
308
310
312
314
316
318
320
Reverse Clutch
Reverse Clutch Hub
Rear Sprag
Inner Race
D
400
402
404
406
408
410
412
414
416
418
420
Gov. Support
Gov.
Output Shaft
Ext. Housing
M301317B
M304317A

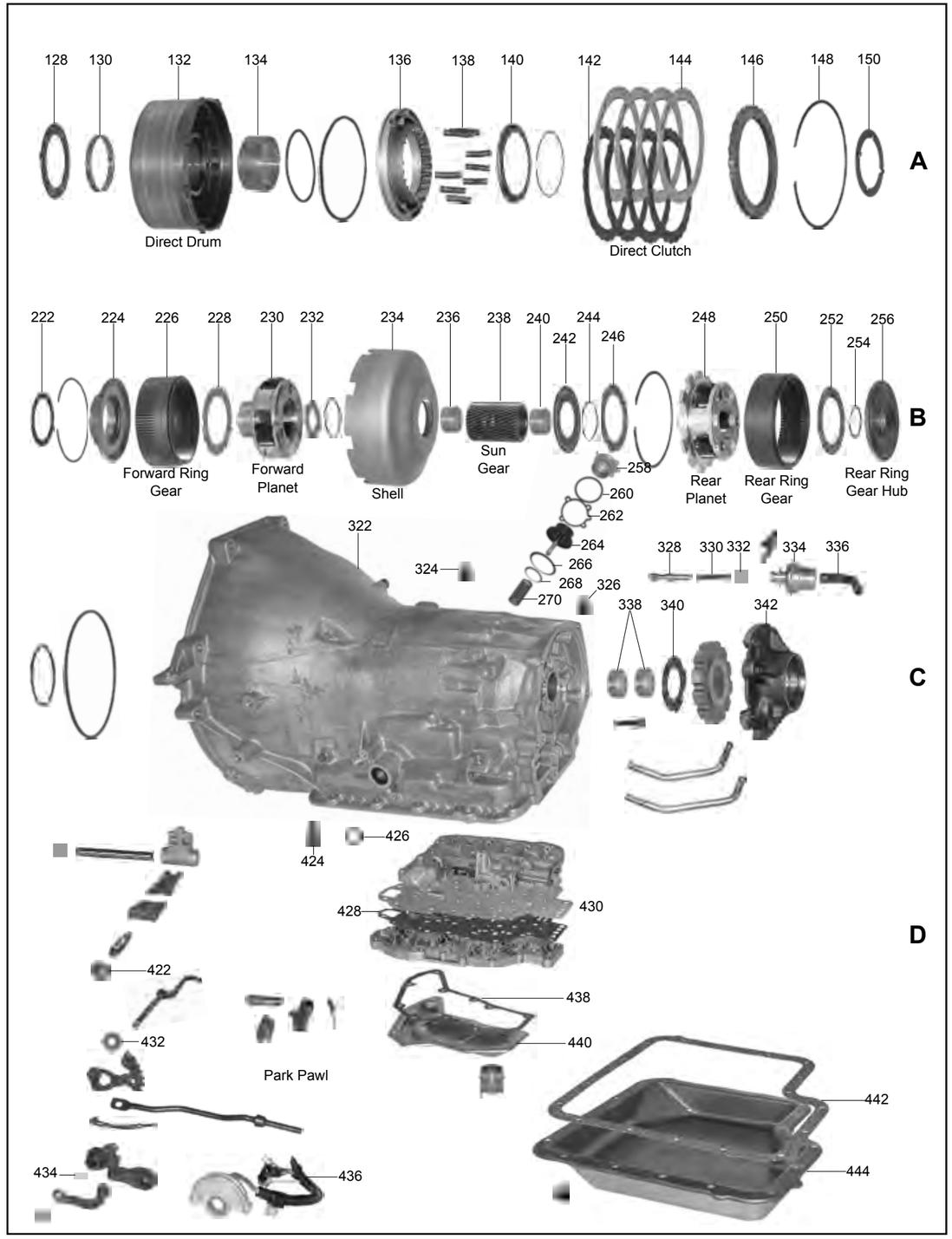
A
128
130
132
134
136
138
140
142
144
146
148
150
Direct Drum
Direct Clutch
B
222
224
226
228
230
232
234
236
238
240
242
244
246
248
250
252
254
256
258
260
262
264
266
268
270
Forward Ring Gear
Forward Planet
Shell
Sun Gear
Rear Planet
Rear Ring Gear
Rear Ring Gear Hub
C
322
324
326
328
330
332
334
336
338
340
342
424
426
428
430
Park Pawl
D
422
432
434
436
438
440
442
444

ILL.		Qty.	Year	Part #	Ref. #
DELUXE KITS (SUPER KITS WITH STEELS)					
N.I.	C-6	1	67-E76	36008A	N.L.
N.I.	C-6	1	L76-Up	36008B	N.L.
MASTER OVERHAUL KITS (WITH STEELS)					
N.I.	C-6	1	67-E76	36006A	N.L.
N.I.	C-6	1	L76-Up	36006B	N.L.
MASTER OVERHAUL KITS (LESS STEELS)					
N.I.	C-6	1	67-E76	36004A	N.L.
N.I.	C-6	1	L76-Up	36004B	N.L.
OVERHAUL KITS (WITH RINGS AND SEALS)					
N.I.	C-6	1	L67-Up	36002C	N.L.
GASKETS & O-RINGS					
122A	O-Ring, Front Pump	1	66-Up	36311	C6AZ-7A248A
124A	Gasket, Pump	1	66-Up	36310	E0AZ-7A136B
260B	O-Ring, Intermediate Servo Cover	1	66-Up	36362	N.L.
262B	Gasket, Intermediate Servo Cover	1	66-Up	36307A	D4AZ-7D026A
412D	Gasket, Extension Housing	1	66-Up	36305	C6AZ-7086A
428D	Gasket, Valve Body (Lower)	1	67-Up	36321	D6AZ-7D100A
438D	Gasket, Oil Filter	1	66-Up	36326	C6AZ-7E062A
442D	Gasket, Bottom Pan	1	66-Up	36300	C6AZ-7A191B
N.I.	Gasket, Adapter to Transfer Case (205 Transfer Case)	1	66-Up	311304	N.L.
N.I.	Gasket, Adapter to Transfer Case (1356 Transfer Case)	1	66-Up	325304	N.L.
N.I.	Gasket, Adapter to Transfer Case (208 Transfer Case)	1	66-Up	331304B	D3TZ-7086C
N.I.	O-Ring, Throttle Shaft	1	66-Up	36349	386078-S
N.I.	Seal, Throttle Shaft (w/ 4 Lobes)	1	66-Up	36349A	386078-S
N.I.	External Seal Kit	1	66-Up	36390	N.L.
METAL CLAD SEALS					
102A	Front w/o Flange	1	66-Up	36070	C2AZ-7A248A
418D	Rear (w/o Boot)	1	66-Up	36074	C3AZ-7052A
418D	Rear (1.125" Long Boot)	1	66-Up	36074B	C1DP-7052A
418D	Rear (.875" Long Boot)	1	66-Up	36074BA	N.L.
418D	Rear (Truck, w/ Bolt on Yoke)	1	66-Up	36074D	B3TZ-7A011A
426D	Linkage Shaft	1	66-Up	36072	C7AZ-7B498A
SEALING RINGS & KITS					
N.I.	Ring Kit (Metal)	1	66-Up	36175K	N.L.
FRICTION PLATES					
144A	Direct (Waffle) (.077")	3-4	66-Up	36106	F6TZ-7B164B
144A	Direct (Waffle) (.077") (High Performance)	3-4	66-Up	36106HP	N.L.
214B	Forward (.061") (L67-E76)	3-5	67-E76	36108A	D2AP-7B164A
214B	Forward (.061") (L67-E76) (High Performance)	5	67-E76	36108AHP	N.L.
214B	Forward (.075")	4	L76-Up	36108B	D6AP-7E311AA
214B	Forward (.075") (High Performance)	4	L76-Up	36108BHP	N.L.
214B	Forward (.075") (Hardcore)	4-5	L76-Up	36108C	F2TZ-7B164A
304C	Reverse	4-6	66-Up	36110	E0UP-7E312AA
304C	Reverse (High Performance)	4-6	66-Up	36110HP	N.L.
STEEL PLATES					
212B	Forward & Direct (.078")	8	66-Up	36126	C6AZ-7B442A
212B	Forward & Direct (.095") (Oversized)	AR	66-Up	36126X	N.L.
212B	Forward (Waved)	1	66-76	36126B	C6AZ-7B442C
306C	Reverse (.068")	4-6	66-Up	36130	E9TZ-7B442E
306C	Reverse (.081") (Oversized)	AR	66-Up	36130X	C6AZ-7B442B
N.I.	Steel Module	1	66-Up	36139	N.L.
PRESSURE PLATES					
146A	Direct (.337") Flat	1	66-Up	36146	C6AZ-7B066B
146A	Direct (.220") Flat	1	66-Up	36146HD	N.L.
208B	Forward (Bottom) Beveled (.297")	1	66-Up	36149	C6AZ-7B066A
216B	Forward (.337") Flat	1	66-Up	36146	C6AZ-7B066B
216B	Forward (.220") Flat	1	66-Up	36146HD	N.L.

ILL.		Qty.	Year	Part #	Ref. #
PRESSURE PLATES (Cont.)					
302C	Reverse (.400")	1	66-Up	36150	C6AZ-7B066C
302C	Reverse (.550")	1	66-Up	36150E	E9TZ-7B066A
FILTERS					
404D	Governor Screen	1	66-Up	36014	D0AP-7E387A
440D	2wd	1	66-74	36010A	C6AZ-7A098A
440D	2wd	1	75-Up	36010B	C5AZ-7A098AB
440D	4wd	1	73-Up	36010C	D3TZ-7A098AB
N.I.	4wd Filter Pick-Up Tube	1	73-Up	36495	D3TZ-7A102C
FILTER KITS					
N.I.	Filter Kit (2wd)	1	66-74	36011A	N.L.
N.I.	Filter Kit (2wd)	1	75-Up	36011B	N.L.
N.I.	Filter Kit (4wd)	1	73-Up	36011C	N.L.
BANDS					
126A	Intermediate Flex	1	66-Up	36022	D9AZ-7D034B
126A	Intermediate Flex (Raybestos Pro Series)	1	66-Up	36022D	N.L.
BUSHINGS					
N.I.	Bushing Kit	1	66-Up	36030	N.L.
104A	Pump Body, Babbitt	1	66-Up	36034	E0AZ-7B258B
104A	Pump Body, Bronze	1	66-Up	36034B	C6AZ-7B258A
110A	Stator (Front)	1-2	66-Up	36036	C6AZ-7B261C
118A	Stator (Rear)	1	66-Up	36037	C6AZ-7D018A
130A	Direct Drum (Front)	1	66-Up	36046B	C6AZ-7D046B
134A	Direct Drum (Rear)	1	66-Up	36046	C6AZ-7D046A
236B	Sun Gear	2	66-Up	36040	C6AZ-7D065A
338C	Case w/o Oil Groove (Rear)	1	66-94	36064B	F2TZ-7025B
338C	Case w/ 1 Oil Groove (Rear)	1	95-96	36064BA	36008D
338C	Case w/ 3 Oil Grooves (Front)	1-2	66-96	36064	C6AZ-7025D
338C	Case (1 Piece Type)	1	66-96	36064H	N.L.
416D	Extension Housing (Brass)	1	66-Up	36066	B5AZ-7A034A
416D	Extension Housing (Babbitt)	1	66-Up	36066B	C1VY-7A034A
416D	Extension Housing (Teflon Coated)	1	66-Up	36066T	F2TZ-7A034A
THRUST WASHERS/BEARINGS					
WASHERS					
N.I.	Washer Kit (w/o Selectives)	1	66-Up	36200	N.L.
N.I.	Washer Kit (w/ Metal Selectives)	1	66-Up	36200A	N.L.
128A	Stator Support .074" (#2)	1	66-Up	36210B	C6AZ-7D014B
128A	Stator Support .089" (#3)	1	66-Up	36210C	C6AZ-7D014C
128A	Stator Support .104" (#4)	1	66-Up	36210D	C6AZ-7D014D
128A	Stator Support .119" (#5)	1	66-Up	36210E	C6AZ-7D014E
150A	Direct Drum to Forward Drum	1	66-Up	36229	C6AZ-7C096A
222B	Forward Drum to Hub	1	66-Up	36231	C9AZ-7D090A
228B	Forward (3 Gear Planets) (6 Tab) (Front/Rear)	1	66-Up	36235B	C6AZ-7A166A
246B	Reverse (3 Gear Planets) (6 Tab) (Front/Rear)	2	66-Up	36235B	C6AZ-7A166A
246B	Reverse (4 Gear Planet) (4 Tab)	2	66-Up	36235C	C6SZ-7A166A
314C	Output Hub to Sprag Race (2 Tang)	1	66-69	36254	C6AZ-7D422B
314C	Output Hub to Sprag Race (3 Tang)	1	70-76	36254A	C9AZ-7D422A
340C	Parking Gear to Case	1	66-Up	36263	D3TZ-7B368A
BEARINGS					
N.I.	Bearing Kit (3 Bearings)	1	66-Up	36201A	N.L.
232B	Bearing w/ Race, Sun Gear (1 Piece Type)	1	76-Up	36238A	E0AZ-7F231A
242B	Race, Input Shell	1	66-Up	36243	C6AZ-7D066B
314C	Bearing w/ 2 Races, Output Hub to Sprag Race (Updated)	1	66-Up	36254C	E6DZ-7G178A
N.I.	Shim, Forward & Rear 3 Gear Planet .010"	1	66-Up	36236AK	36428-Z
N.I.	Shim, Forward & Rear 4 Gear Planet .010"	1	66-Up	36236BK	36428A-Z
N.I.	Shim, Output Hub .010"	1	66-Up	36255A	N.L.
N.I.	Shim, Output Hub .020"	1	66-Up	36255B	N.L.
N.I.	Shim, Output Hub .030"	1	66-Up	36255C	N.L.

ILL.		Qty.	Year	Part #	Ref. #
ELECTRICAL COMPONENTS					
N.I.	Sensor, Output Speed (VSS) (Analog - Cable Driven)	1	89-Up	36436	E9TP-9E731AA
VALVE BODY RECALIBRATION KITS					
N.I.	Shift Kit®, Diesel & Gas (Transgo®)	1	66-Up	T36165	SK® 6
N.I.	Valve Body Kit (Superior)	1	66-Up	S36165	K-C6
N.I.	Reprogramming Kit™ (Gas) Heavy Duty; Towing & Competition (Transgo®)	1	67-Up	T36169	67-1&2
PUMPS					
114A	Pump	1	L67-Up	36500A	C8AZ-7A103B
PUMP COMPONENTS					
108A	Pump Gears	1	66-Up	36530	C6AP-7C010B
108A	Pump Gears (Oversized)	1	66-Up	36530-OS	N.L.
112A	Stator	1	66-Up	36520A	N.L.
N.I.	Poppet Valve Set, Drain Back (In Stator) (5 Pack)	1	66-Up	36507DK	N.L.
DRUMS & COMPONENTS					
132A	Direct (4 Clutch)	1	66-Up	36555	C9SZ-7D044A
138A	Spring, Direct Clutch Return	10	66-E76	36975	C7ZZ-7B488A
202B	Forward 30 Spline (5 Clutch)	1	L76-Up	36554G	D5AZ-7A360B
204B	Piston, Forward Clutch	1	76-Up	36964	D6AZ-7A262A
206B	Spring, Forward Clutch Disc Spring .076”	1	66-E76	36974A	D9AZ-7B070A
206B	Spring, Forward Clutch Disc Spring .094”	1	L76-Up	36974B	D9AZ-7B070A
210B	Cushion, Forward Clutch	1	66-Up	36853	D6AZ-7E085B
310C	Clutch Hub, Reverse	1	66-Up	36576	F3TZ-7B067A
318C	Springs w/ Retainer, Reverse Clutch Return	1	76-E86	36976A	D6AZ-7D406A
318C	Springs w/ Retainer, Reverse Clutch Return (No Snap Ring Type)	1	L86-Up	36976B	E6TZ-7D406A
PLANETS & COMPONENTS					
230B	Forward (3 Gear)	1	66-E76	36582	D5AZ-7A398A
230B	Forward (3 Gear)	1	L76-Up	36582A	D5AZ-7A398A
248B	Rear (4 Gear)	1	66-Up	36584A	C6SZ-7D006B
248B	Rear (6 Gear)	1	66-Up	36584E	N.L.
226B	Ring Gear Kit, Forward Ring Gear & Hub	1	L76-Up	36592K	D6AZ-7D392A
250B	Ring Gear Kit, Rear Ring Gear & Hub (3 Tab Washer Type)	1	66-Up	36594K	C9AZ-7D164
250B	Ring Gear Kit, Rear Ring Gear & Hub (Bearing Type)	1	66-Up	36594AK	E9TZ-7D164
256B	Hub & Race Kits (Bearing Type)	1	66-Up	36604CK	N.L.
SUN GEARS					
234B	Sun Gear & Input Shell	1	66-Up	36622K	N.L.
ONE WAY CLUTCHES					
312C	Rear Sprag (Plastic Cage) Retros All C-6	1	66-Up	36654D	F3TZ-7A089A
316C	Inner Race (Washer Type) Low Roller Clutch 1.089”	1	66-69	36664	C9AZ-7D171
316C	Inner Race (Bearing Type) Low Roller 1.013”	1	89-Up	36664E	E9TZ-7D171AA
316C	Inner Race Kit (1.013”) w/ OE Bearing	1	89-Up	36664EK	36429E-K
SHAFTS					
100A	Input Shaft (31 Spline Converter End & 30 Spline Drum End)	1	L71-Up	36670A	N.L.
408D	Output Shaft (4wd) (15.375”)	1	66-Up	36678C	D6TZ-7060C
408D	Output Shaft (4wd) (18.500”)	1	66-Up	36678D	D7TZ-7060B
VALVE BODIES & GOVERNORS					
342C	Oil Distribution Sleeve, 4 Bolts to Case	1	66-Up	36697	E9TZ-7A233A
402D	Support, Governor w/ 3 Ring Grooves	1	66-Up	36685	N.L.
406D	Governor	1	66-76	36680	N.L.
406D	Governor	1	77-Up	36680A	D8AZ-7C063
430D	Valve Body Diesel	1	76-Up	36740-1	N.L.
430D	Valve Body Gas	1	76-Up	36740-2	N.L.
CASES/HOUSINGS & COMPONENTS					
414D	Extension Housing (2wd) (Aluminum)	1	66-Up	36770	N.L.
444D	Pan (2wd) (1.875” Deep)	1	75-Up	36765A	36950-01

ILL.		Qty.	Year	Part #	Ref. #
SNAP RINGS					
148A	Forward & Direct Clutch Top Pressure Plate .058”	1	66-Up	36878	377126-S
148A	Forward & Direct Clutch Top Pressure Plate .076”	1	66-Up	36878B	377127-S
148A	Forward & Direct Clutch Top Pressure Plate .085”	1	66-Up	36878C	377128-S
148A	Forward & Direct Clutch Top Pressure Plate .094”	1	66-Up	36878D	377444-S
254B	Output Shaft (Front) .075”	1	L76-Up	36894	387031-S5
300C	Rear Hub to Rear Ring Gear	1	66-Up	36889A	377132-S
N.I.	Forward Clutch Hub to Forward Ring Gear	1	66-Up	36881	377132S
N.I.	Rear Planet to Reverse Hub	1	66-Up	36888	377155
N.I.	Output Shaft (Rear)	1	66-Up	36895	387035
MISCELLANEOUS COMPONENTS					
334C	Modulator, Screw In (Single w/ White Stripe)	1	66-72	26160	C4AZ-7A377B
334C	Modulator, Push In (Single w/ Black Stripe)	1	73-Up	36160B	D3TZ-7A377A
334C	Modulator, Push In (Single w/ Green Stripe)	1	73-Up	36160G	D7OZ-7A377A
334C	Modulator, Push In (Single w/ Purple Stripe)	1	75-Up	36160P	D5AZ-7A377A
336C	Hose, Modulator (Elbow)	1	66-Up	44162	C1AZ-7B087E
422D	Nut, Band Adjusting Nut	1	66-Up	36922	375185-S100
N.I.	Spring Kit, 1-2 Accumulator (5 Inner & 5 Outer Per Kit)	1	66-Up	36926K	36946-05K
SERVOS & ACCUMULATORS					
N.I.	Servo Assembly, C6 (Code “R”)	1	66-Up	36905B	K36528R
258B	Cover, Intermediate Servo (w/ Cast Letter N)	1	66-Up	36909A	N.L.
258B	Cover, Intermediate Servo (w/ Cast Letter S)	1	66-Up	36909B	D7AZ-7D027A
264B	Piston, Intermediate Servo (Green Dot, Fits L Cover)	1	66-Up	36907	D5TZ-7D021A
264B	Piston, Intermediate Servo (Red Dot, Fits N Cover)	1	66-Up	36907A	D5UZ-7D021A
264B	Piston, Intermediate Servo (Blue Dot, Fits P Cover)	1	66-Up	36907B	D5TZ-7D021B
264B	Piston, Intermediate Servo (Truck) (Yellow Dot, Fits S Cover)	1	66-Up	36907C	D7AZ-7D021A
TECHNICAL MANUALS					
N.I.	Tech Manual	1	66-Up	36400	83-C6TM

Notes

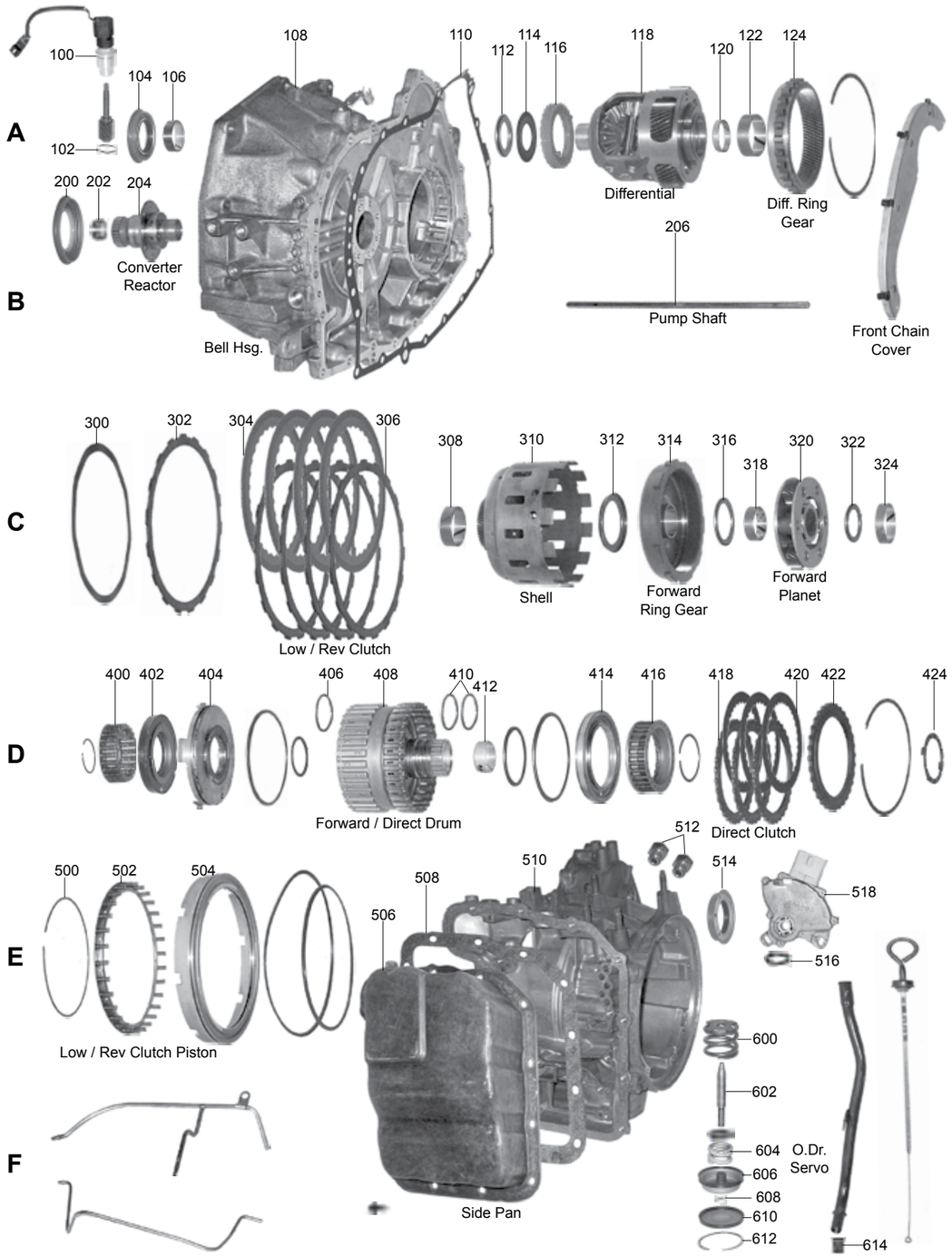
A
B
C
D
E
F
100
102
104
106
108
110
112
114
116
118
120
122
124
200
202
204
206
Converter Reactor
Bell Hsg.
Differential
Diff. Ring Gear
Pump Shaft
Front Chain Cover
300
302
304
306
Low / Rev Clutch
308
310
312
314
316
318
320
322
324
Shell
Forward Ring Gear
Forward Planet
400
402
404
406
408
410
412
414
416
418
420
422
424
Forward / Direct Drum
Direct Clutch
500
502
504
Low / Rev Clutch Piston
506
508
510
512
514
516
518
Side Pan
600
602
604
606
608
610
612
614
O.Dr. Servo

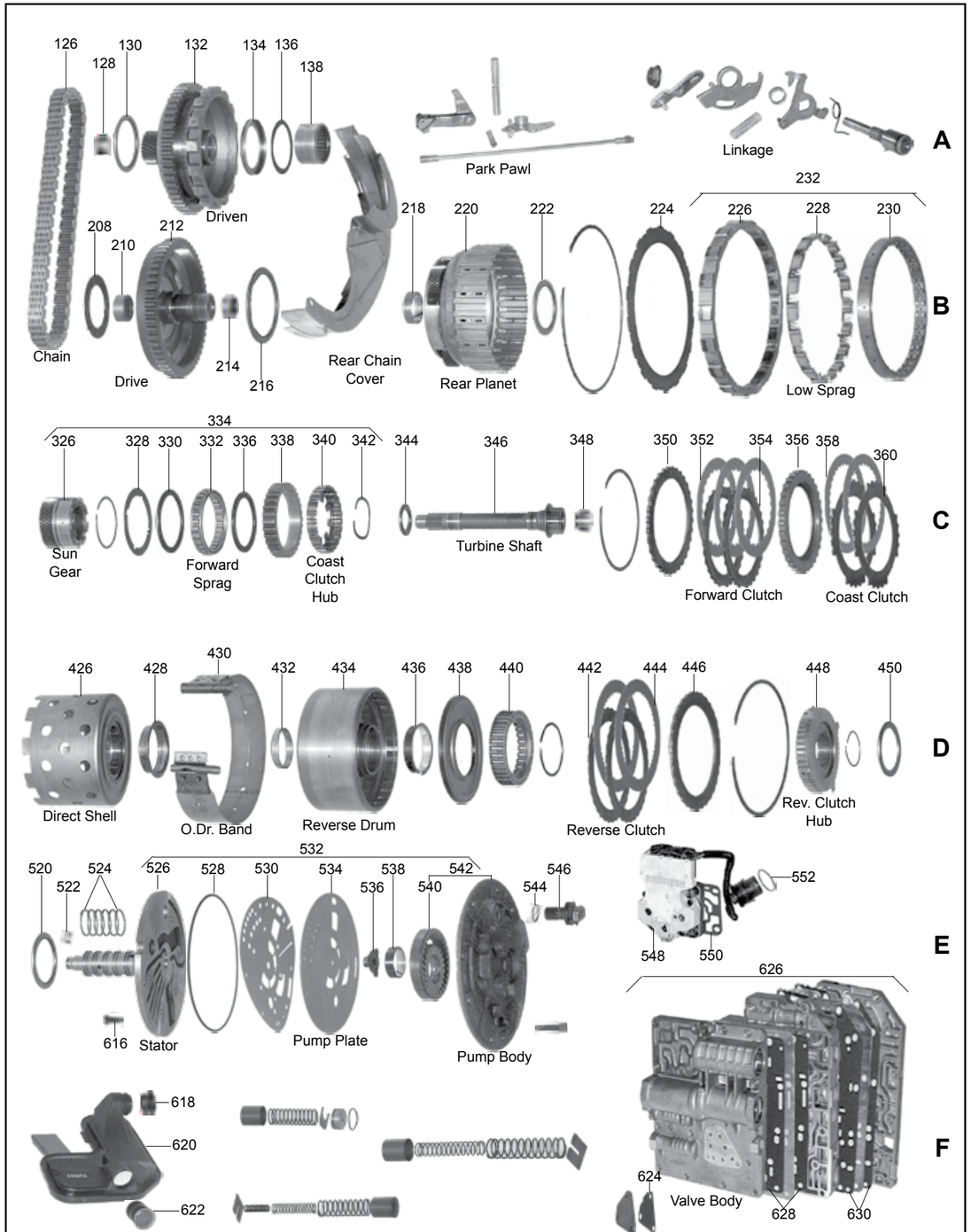
A
B
C
D
E
F
126
128
130
132
134
136
138
Chain
Driven
Park Pawl
Linkage
208
210
212
214
216
Drive
Rear Chain Cover
218
220
222
Rear Planet
224
226
228
230
232
Low Sprag
326
328
330
332
334
336
338
340
342
Sun Gear
Forward Sprag
Coast Clutch Hub
344
346
348
Turbine Shaft
350
352
354
356
358
360
Forward Clutch
Coast Clutch
426
428
430
432
434
436
438
440
442
444
446
448
450
Direct Shell
O.Dr. Band
Reverse Drum
Reverse Clutch
Rev. Clutch Hub
520
522
524
526
528
530
532
534
536
538
540
542
544
546
616
Stator
Pump Plate
Pump Body
548
550
552
618
620
622
624
626
628
630
Valve Body

ILL.		Qty.	Year	Part #	Ref. #
DELUXE KITS (SUPER KITS WITH STEELS)					
N.I.	CD4E (w/ Pistons)	1	94-02	96008BP	N.L.
N.I.	CD4E (w/ Pistons)	1	03-Up	96008CP	N.L.
MASTER OVERHAUL KITS (WITH STEELS)					
N.I.	CD4E (w/ Pistons)	1	94-02	96006BP	N.L.
N.I.	CD4E (w/ Pistons)	1	03-Up	96006CP	N.L.
MASTER OVERHAUL KITS (LESS STEELS)					
N.I.	CD4E (w/ Pistons)	1	94-02	96004BP	N.L.
N.I.	CD4E (w/ Pistons)	1	03-Up	96004CP	N.L.
OVERHAUL KITS (WITH RINGS AND SEALS)					
N.I.	CD4E (w/o Pistons)	1	94-02	96002	N.L.
N.I.	CD4E (w/o Pistons)	1	03-Up	96002C	N.L.
BONDED PISTONS					
N.I.	Piston Kit	1	94-97	96960	N.L.
N.I.	Piston Kit	1	98-Up	96960A	N.L.
402D	Piston, Coast Clutch (Overall Height .595") (Bonded)	1	94-97	96969	F3RZ-7A262C
402D	Piston, Coast Clutch (Overall Height .675") (Bonded)	1	98-Up	96969A	F8RZ-7A262BA
438D	Piston, Reverse Clutch (Bonded)	1	94-Up	96966	F3RZ-7E079A
GASKETS & O-RINGS					
110A	Gasket, Case To Bell Housing	1	94-Up	96318	F3RZ-7B353A
508E	Gasket, Side Cover	1	94-Up	96301	F3RZ-7F396A
508E	Gasket, Side Cover (Rubber)	1	03-Up	96301W	3L8Z-7F396AA
528E	Lathe Cut Seal, Pump Body	1	94-Up	96311	F3RZ-7A248A
530E	Gasket, Pump Separator Plate	1	94-96	96310	F3RP-7G331AB
530E	Gasket, Pump Separator Plate	1	97-Up	96310A	F7RZ-7G331AA
550E	Gasket, Solenoid Body to Case	1	94-Up	96328	F3RZ-7H200A
614F	Seal, Filler Tube	1	94-Up	44371B	E2FZ-7N243A
618F	Seal, Filter (Small)	1	94-Up	96379	F3RZ-7Z302AB
622F	Seal, Filter (Large)	1	94-Up	96379A	F3RZ-7H249A
624F	Gasket, Pressure Tap Plate	1	94-Up	96322	F3RZ-7H251A
628F	Gasket Package, Valve Body	1	94-Up	96320K	N.L.
N.I.	Seal, Final Drive Lube Tube (Cup Type)	1	94-Up	96383	F3RP-7H205AB
METAL CLAD SEALS					
104A	Axle (2WD) (Left/Right)	1-2	94-Up	96076	F3RZ-1177A
104A	Axle (Right) (4wd 01-Up)	1	01-Up	96076A	YL8Z-7S177AA
200B	Converter Hub	1	94-Up	96070	F3RP-7F401AA
516E	Manual Lever, Park Shaft (Large)	1	94-Up	66072	E1FZ-7B498A
N.I.	Manual Lever, Manual Shaft (Small)	1	94-Up	86074	E6DZ-7F337A
SEALING RINGS & KITS					
N.I.	Ring Kit	1	94-Up	96175TK	N.L.
FRICTION PLATES					
304C	Low/ Reverse	3-4	94-Up	96114	F3RP-7H094CA
304C	Low/ Reverse (Hi-Energy)	3-4	01-Up	96114A	1S7Z-7B164AB
352C	Forward	3	94-Up	96108	F3RP-7H091AA
352C	Forward (Hi-Energy)	3	01-Up	96108A	1S7Z-7B164AA
358C	Coast	1-2	94-Up	96112	F3RP-7H217BA
358C	Coast (Hi-Energy)	1-2	94-Up	96112A	F7RP-7H217AA
420D	Direct	3-4	94-Up	96106	F3RP-7H095AA
420D	Direct (Hi-Energy)	3-4	94-Up	96106A	F6RP-7H095AA
444D	Reverse	2	94-Up	96110	F3RP-7H090AA
STEEL PLATES					
302C	Low/ Reverse (2.1mm)	AR	94-Up	96154A	F3RZ-7B066D
302C	Low/ Reverse (2.3mm)	AR	94-Up	96154B	F3RZ-7B066E
302C	Low/ Reverse (2.5mm)	AR	94-Up	96154C	F3RZ-7B066F
302C	Low/ Reverse (2.7mm)	AR	94-Up	96154D	F3RZ-7B066G
306C	Low/ Reverse (.070")	3-4	94-Up	96134	F3RZ-7B442B
3545C	Forward	2-3	94-Up	96128	F3RZ-7B442C
360C	Coast	2	94-Up	96132	F3RZ-7B442D

ILL.		Qty.	Year	Part #	Ref. #
STEEL PLATES (Cont.)					
418D	Direct (.079")	3-4	94-Up	96126	F3RZ-7B442E
418D	Direct (.118")	3-4	94-Up	96126B	F5RZ-7B442A
442D	Reverse	2	94-Up	96130	F3RZ-7B442A
N.I.	Forward (Waved)	1	94-Up	96129A	F8RZ-7E085AA
FRICTION & STEEL KITS					
N.I.	Steel Module	1	94-Up	96139	N.L.
PRESSURE PLATES					
350C	Forward (Flat)	1	94-Up	96148	F3RZ-7B066BA
356C	Coast (.358")	1	94-97	96152	FRZ-7B066C
356C	Coast (.189")	1	98-Up	96152A	F8RZ-7B066AA
422D	Direct	1	94-Up	96146	F3RZ-7B477A
446D	Reverse	1	94-Up	96150	F3RZ-7D408A
FILTERS					
620F	CD4E	1	94-Up	96010	F3RZ-7A098A
BANDS					
430D	2-4	1	94-Up	96020A	F3RP-7G477BA
430D	2-4 (Hi-Energy)	1	94-Up	96020B	YL8P-7G477AA
BUSHINGS					
N.I.	Bushing Kit	1	94-Up	96030	N.L.
N.I.	Converter Hub 1.772"ID	1	94-Up	96031	F3RP-7N805AA
106A	Differential Housing (Right Side)	1	94-Up	96063B	N.L.
122A	Differential Housing 2.061"ID (Left Side)	1	94-Up	96063	F3RP-7H040AA
128A	Driven Sprocket 1.156"ID	1	94-Up	96060	F3RP-7G344AA
202B	Converter Reactor .935"ID	1	94-Up	96032	F3RP-7N817AA
218B	Reverse Planet 1.762"ID	1	94-Up	96058	F3RP-7H043AA
308C	Reverse Sun Gear Shell 2.122"ID	1	94-Up	96056	F3RP-7H033AB
318C	Forward Planet 1.691"ID	1	94-Up	96053	F3RP-7H034AA
324C	Forward Sun Gear 2.059"ID	1	94-Up	96052	F3RP-7F366AA
348C	Turbine Shaft .785"ID	1	94-Up	96049	F3RP-7H025AA
412D	Direct & Forward Drum 1.478"ID	1	94-Up	96048	F3RP-7H209AB
428D	Direct Hub & Shell 2.430"ID	1	94-Up	96051	F3RP-7H240AA
432D	Reverse Clutch Drum (Front) 2.246"ID	1	94-Up	96046B	F3RP-7F218AA
436D	Reverse Clutch Drum (Rear) 2.053"ID	1	94-Up	96046	E6SP-7G123AA
538E	Inner Pump Gear 1.358"ID	1	94-Up	96035	F3RP-7B259BA
THRUST WASHERS/BEARINGS					
WASHERS					
208B	Drive Sprocket To Bell Housing .056"	1	94-Up	96279A	F3RZ-7G099A
208B	Drive Sprocket To Bell Housing .066"	1	94-Up	96279B	F3RZ-7G099B
208B	Drive Sprocket To Bell Housing .076"	1	94-Up	96279C	F3RZ-7G099C
208B	Drive Sprocket To Bell Housing .086"	1	94-Up	96279D	F3RZ-7G099D
424D	Forward & Direct Drum To Direct Shell (Plastic 4 Tab)	1	94-Up	96231	F3RZ-7G116A
BEARINGS					
N.I.	Bearing Kit	1	94-Up	96201A	SBK-F18
130A	Bearing, Differential To Driven Sprocket	1	94-Up	96281	F3RZ-7G233A
134A	Bearing, Driven Sprocket To Case	1	94-Up	96263	F3RZ-7G247A
138A	Bearing, Caged Roller, Case to Driven Sprocket Support	1	94-Up	96264	F3RZ-7G355A
210B	Bearing, Drive Sprocket (Front, Inner)	1	94-Up	96298A	F3RZ-7H032A
214B	Bearing, Drive Sprocket (Rear, Inner)	1	94-Up	96298B	F3RZ-7H029A
216B	Bearing, Drive Sprocket To Reverse Planet	1	94-Up	96251	F3RZ-7F240A
312C	Bearing, Reverse/Overdrive Shell To Forward Ring Gear	1	94-Up	96241	F3RZ-7G178A
316C	Bearing, Forward Ring Gear To Forward Planet	1	94-Up	96238	F3RZ-7H028A
322C	Bearing, Forward Planet To Sun Gear	1	94-Up	96235	F3RZ-7H027A
344C	Bearing, Forward Sun Gear To Forward & Direct Drum	1	94-Up	96232	F3RZ-7H026A
450D	Bearing, Stator To Reverse Hub	1	94-Up	96211	F3RZ-7H241A

ILL.		Qty.	Year	Part #	Ref. #
ELECTRICAL COMPONENTS					
100A	Output Speed Sensor (VSS) w/ Drive Gear (Probe/Mazda)	1	94-Up	96436D	F42Z-9E731AA
100A	Output Speed Sensor (VSS) No Drive Gear	1	98-Up	96436A	6L8Z-7H103AA
100A	Output Speed Sensor (VSS) (10" Harness) w/ Cable Drive	1	95-Up	96436C	F5RZ-9E731GA
100A	Output Speed Sensor (VSS) (10" Harness) No Cable Drive (2.0L)	1	95-Up	96436E	F5RZ-9E731AB
100A	Output Speed Sensor (VSS) (16" Harness) No Cable Drive (2.5L)	1	95-Up	96436B	F5RZ-9E731BC
518E	Switch, Manual Lever Position (MLPS)	1	94-Up	96410E	YL8Z-7F293AA
546E	Input Speed Sensor (TSS) (Beige Connector) (Probe/Mazda)	1	94-97	96438C	F7RZ-7M101KA
546E	Input Speed Sensor (TSS) (Black Connector) (Exc Probe/Mazda)	1	94-Up	96438B	1S7Z7M101KA
548E	Solenoid Assembly	1	94-Up	96420A	F6RZ-7G391A
VALVE BODY RECALIBRATION KITS					
N.I.	Shift Kit-Jr®, CD4E Junior (Transgo®)	1	94-Up	T96167	SK® CD4E
N.I.	Shift Correction Package (Superior)	1	94-Up	S96167	KCD4E
VALVE BODY COMPONENTS					
N.I.	Kit, Bypass Clutch Control Sleeve & Plunger Valve (req T-73840-BTL)	1	94-Up	96741BK	N.L.
N.I.	Kit, Oversized Pressure Regulator Valve (req T-73840-RTL)	1	94-Up	96741CK	N.L.
N.I.	Valve Kit, Line Mod (Oversized) (req T-73840-TL27 & T-VB-FIX)	1	94-Up	96741TK	N.L.
PUMPS					
532E	Pump (Retros 94-Up)	1	94-Up	96500A	F7RZ-7A103AA
PUMP COMPONENTS					
534E	Plate, Pump (Retros 94-Up)	1	94-Up	96544A	F7RZ-7A142AA
536E	Plate, Pump Gear Drive	1	94-Up	96507	N.L.
540E	Pump Gears	1	94-Up	96530A	N.L.
DRUMS & COMPONENTS					
340C	Clutch Hub, Coast	1	94-Up	96579	N.L.
400D	Retainer w/ Springs, Forward/ Coast Clutch (94-1/9/98)	1	94-E98	96974	F3RZ-7G299A
402D	Piston, Coast Clutch (Overall Height .595") (Bonded)	1	94-97	96969	F3RZ-7A262C
402D	Piston, Coast Clutch (Overall Height .675") (Bonded)	1	98-Up	96969A	F8RZ-7A262BA
404D	Piston, Forward Clutch	1	94-97	96964	F3RZ-7A262B
404D	Piston, Forward Clutch (Cast # RFF8)	1	98-Up	96964B	F8RZ-7A262AB
408D	Forward & Direct (4 Cyl, 2.0L) (2mm, .079" Direct Steels)	1	94-E98	96554B	F7RZ-7G120AA
408D	Forward & Direct (4 Cyl, 2.0L)	1	L98-Up	96554C	F8RZ-7G120AA
408D	Forward & Direct (6 Cyl, 2.5L)	1	94-E98	96554A	F4RZ-7G120A
408D	Forward & Direct (6 Cyl, 2.5L)	1	L98-Up	96554CA	F8RZ-7G120BA
414D	Piston, Direct Clutch (Not Bonded)	1	94-Up	96965	F3RZ-7A262A
434D	Reverse (2 Clutch)	1	94-Up	96556A	F3RZ-7D044AE
438D	Piston, Reverse Clutch (Bonded)	1	94-Up	96966	F3RZ-7E079A
440D	Retainer w/ Springs, Reverse Clutch	1	94-Up	96976	N.L.
448D	Clutch Hub, Reverse	1	94-Up	96576	F3RZ-7D391A
PLANETS & COMPONENTS					
124A	Ring Gear, Differential Planet (74T)	1	94-Up	96598	N.L.
124A	Ring Gear, Differential Planet (86T)	1	94-Up	96598B	N.L.
220B	Reverse (4 Gear) (w/ Low/ Reverse Clutch Hub)	1	94-Up	96584B	N.L.
314C	Ring Gear, Forward Planet	1	94-Up	96592	F3RZ-7A153C
320C	Forward (Low/ Intermediate) (3 Gear)	1	94-Up	96582	F8RZ7A398AA
320C	Forward (Low/ Intermediate) (4 Gear)	1	94-Up	96582A	3L8Z-7A398AA
SUN GEARS					
326C	Sun Gear (1.760" Overall Height)	1	94-97	96612	N.L.
326C	Sun Gear (1.685" Overall Height)	1	98-Up	96612A	N.L.
ONE WAY CLUTCHES					
228B	Low Roller Clutch (w/o races)	1	94-Up	96652	F3RZ-7A089B
232B	Low Roller Assembly (w/outer and inner races)	1	94-Up	96642	F3RP-7A089B
232B	Low Ratchet Design	1	94-Up	96652A	5L8Z-7A089AB
332C	Input Sprag (Narrow .543")	1	98-Up	96656A	F8RP-7H218AA
334C	Input Sprag Assembly w/ Sun Gear (Wide .593" sprag)	1	94-97	96646	F3RZ-7A089A
334C	Input Sprag Assembly w/ Sun Gear (Narrow .543" sprag)	1	98-Up	96646A	F8RZ-7A089AA

ILL.		Qty.	Year	Part #	Ref. #
SHELLS & SUPPORTS					
310C	Shell, w/ Reverse Sun Gear (58T)	1	94-Up	96622	F3RZ-7A626A
426D	Shell, Direct w/ Hub	1	94-Up	96624	F4RZ-7D064A
SHAFTS					
206B	Shaft, Pump Drive (14 1/16" Long)	1	94-01	96671	F4RZ-7B328C
206B	Shaft, Pump Drive (14 3/4" Long)	1	94-Up	96671A	F4RZ-7B328B
346C	Shaft, Turbine (8 3/8" Long)	1	94-Up	96673	N.L.
346C	Shaft, Turbine (9" Long)	1	94-Up	96673A	N.L.
VALVE BODIES & GOVERNORS					
626F	Valve Body Cast RF-F3 (w/o Solenoids)	1	94-96	96740-1	N.L.
626F	Valve Body Cast RF-F3 (w/ Solenoids)	1	94-96	96740-3	N.L.
626F	Valve Body Cast RF-F7 (w/o Solenoids)	1	97-Up	96740-2	N.L.
626F	Valve Body Cast RF-F7 (w/ Solenoids)	1	97-Up	96740-4	N.L.
DIFFERENTIALS					
118A	Differential Assembly (26T Sun Gear) (24T Pinion Gears)	1	94-Up	96715	F4RZ-7F465B
118A	Differential Assembly (26T Sun Gear) (30T Pinion Gears)	1	94-Up	96715B	F4RZ-7F465C
118A	Differential Assembly (Awd) (Escape, Tribute)	1	94-Up	96715C	N.L.
124A	Final Drive Ring Gear	1	94-Up	96598B	N.L.
CHAINS AND SPROCKETS					
126A	Chain (45 Links .750" Wide)	1	94-Up	96700D	F6RZ-7G249AA
126A	Chain (46 Links .750" Wide)	1	94-Up	96700E	F6RZ-7G249BA
126A	Chain (46 Links 1.00" Wide)	1	94-Up	96700EA	F6RZ-7G249CA
N.I.	Sprocket Kits (55T / 50T) (.625" Wide)	1	94-Up	96710K	N.L.
N.I.	Sprocket Kits (55T / 54T) (.625" Wide)	1	94-Up	96710AK	N.L.
N.I.	Sprocket Kits (55T / 54T) (.855" Wide)	1	94-Up	96710BK	N.L.
MISCELLANEOUS COMPONENTS					
SERVOS & ACCUMULATORS					
N.I.	Servo Assembly, Overdrive	1	94-Up	96900	N.L.
N.I.	Piston Kit, 2-4 Accumulator	1	94-Up	96935	N.L.
N.I.	Piston Kit, Low/ Reverse Accumulator	1	94-Up	96945	N.L.
N.I.	Piston Kit, Forward Accumulator	1	94-Up	96950	N.L.
600F	Spring, Servo (1st Design)	1	94-Up	96901	F3RZ-7H073A
600F	Spring, Servo Return	1	94-Up	96901	73708
606F	Piston, Overdrive Servo (Bonded)	1	94-Up	96902	F4RZ-7H188F
606F	Piston & Spring Assembly, 2/4 Servo (No Groove 108mm Pin)	1	94-Up	96902K	F4RZ-7H188F
606F	Piston & Spring Assembly, 2/4 Servo (1 Groove 107mm Pin)	1	94-Up	96902AK	F4RZ-7H188E
606F	Piston & Spring Assembly, 2/4 Servo (2 Groove 106mm Pin)	1	94-Up	96902BK	F4RZ-7H188D
606F	Piston, 2/4 Servo (No Groove 104mm Pin) (1 piece Piston) (1/97-4/98)	1	97-98	96902C	FZRZ-7H188CA
606F	Piston, 2/4 Servo (1 Groove 103mm Pin) (1 piece Piston) (1/97-4/98)	1	97-98	96902D	FZRZ-7H188BA
606F	Piston, 2/4 Servo (2 Groove 102mm Pin) (1 piece Piston) (1/97-4/98)	1	97-98	96902E	FZRZ-7H188AA
TECHNICAL MANUALS					
N.I.	Tech Manual	1	94-Up	96400	N.L.
N.I.	Tech Manual, ATRA CD4E	1	94-Up	96400B	N.L.
N.I.	ATRA Rebuild Procedures	1	94-Up	96400A	N.L.
TOOLS					
N.I.	Clutch Piston Lip Seal Protector Tool	1	94-Up	T-2301	N.L.
N.I.	Pump Removal Bolts	1	94-Up	T-2305	N.L.
N.I.	Valve Body Guide Pins	1	94-Up	T-2311	N.L.

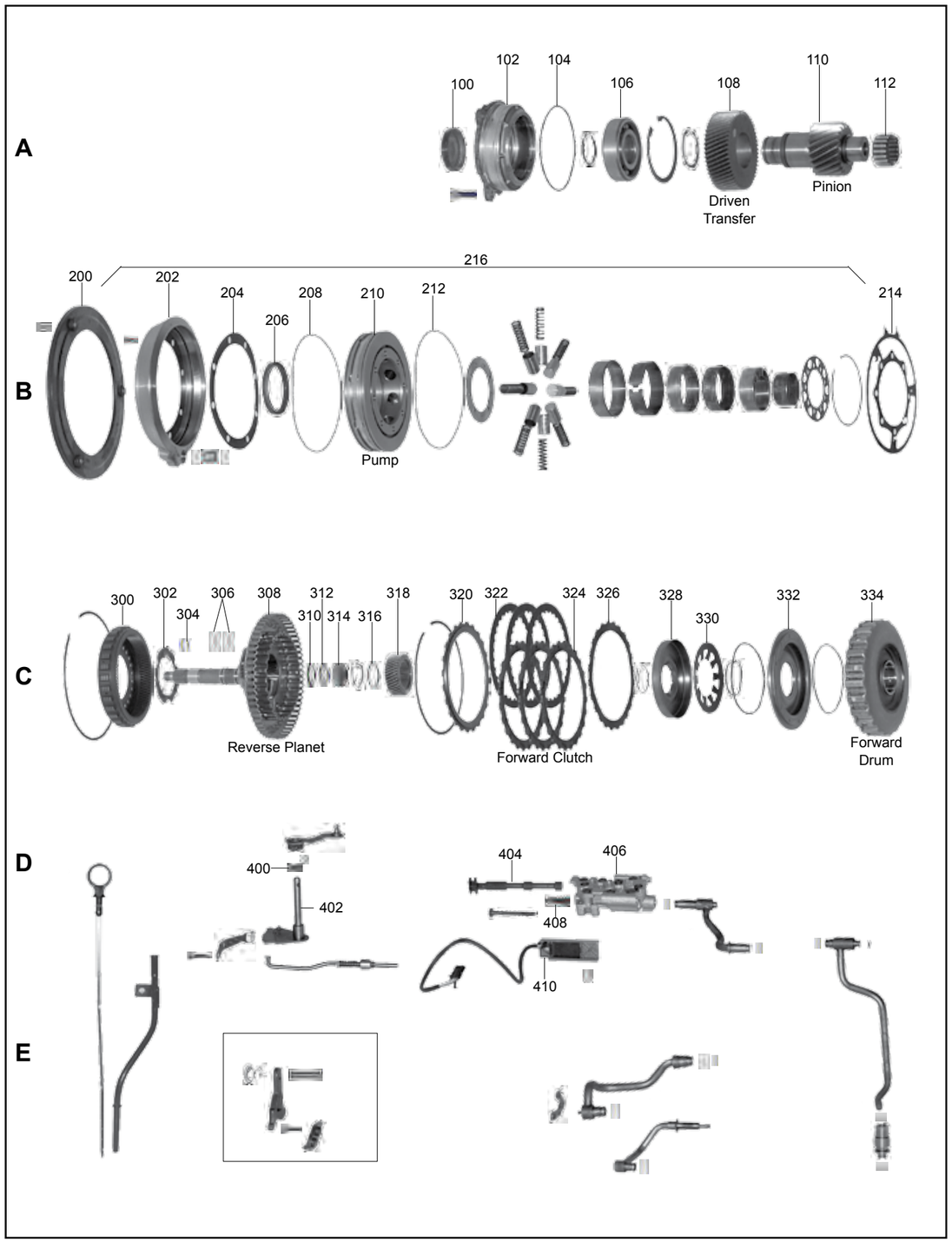
A
100
102
104
106
108
110
112
Driven
Transfer
Pinion
B
200
202
204
206
208
210
212
214
216
Pump
C
300
302
304
306
308
310
312
314
316
318
320
322
324
326
328
330
332
334
Reverse Planet
Forward Clutch
Forward
Drum
D
400
402
404
406
408
410
E

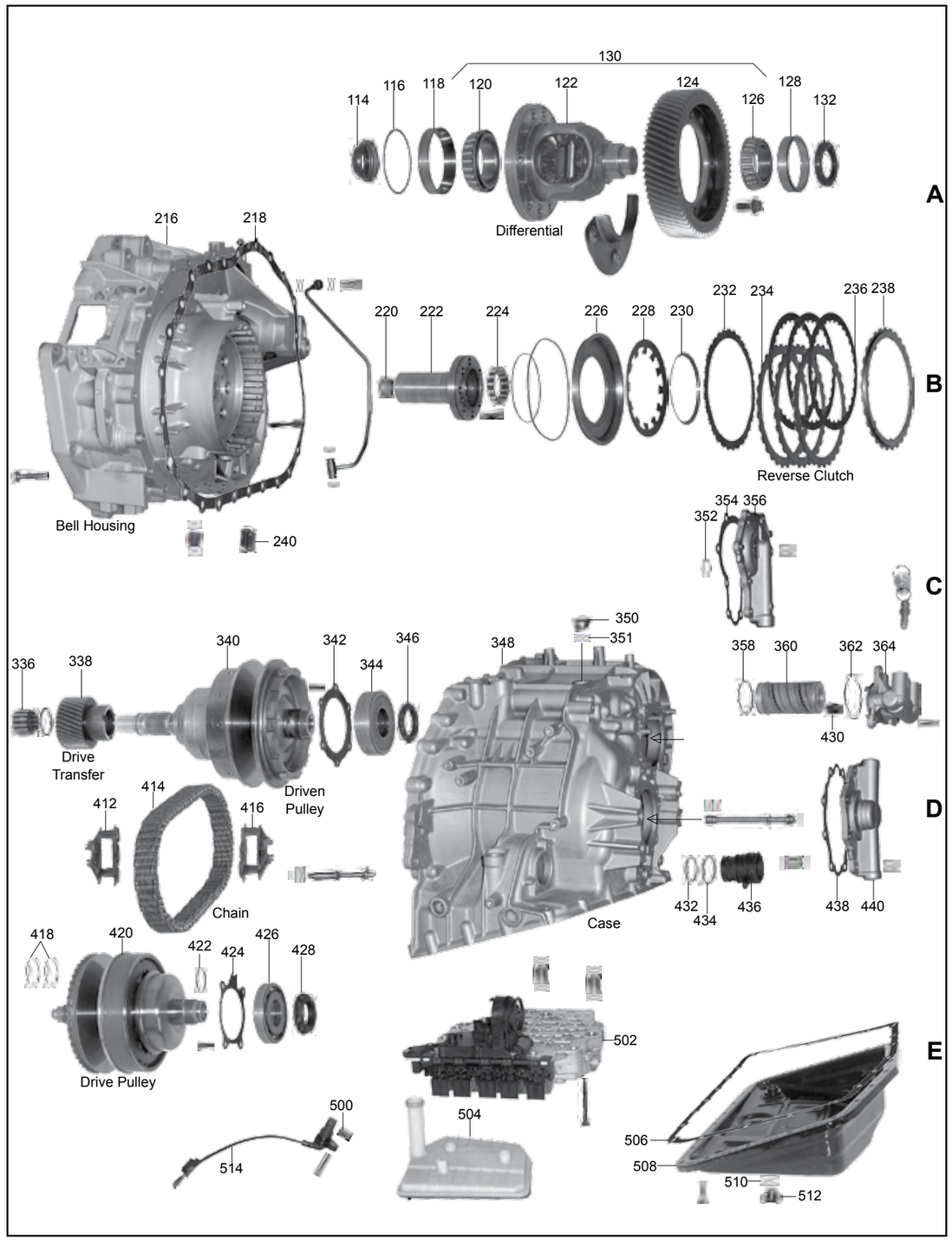
A
114
116
118
120
122
124
126
128
130
132
Differential
B
216
218
220
222
224
226
228
230
232
234
236
238
Reverse Clutch
Bell Housing
240
C
350
351
352
354
356
358
360
362
364
430
336
338
340
342
344
346
348
Drive
Transfer
Driven
Pulley
D
412
414
416
Chain
Case
432
434
436
438
440
418
420
422
424
426
428
Drive Pulley
E
502
504
500
514
506
508
510
512

ILL.		Qty.	Year	Part #	Ref. #
MASTER OVERHAUL KITS (WITH STEELS)					
N.I.	CFT30	1	05-Up	206006	N.L.
MASTER OVERHAUL KITS (LESS STEELS)					
N.I.	CFT30	1	05-Up	206004	N.L.
OVERHAUL KITS (WITH RINGS AND SEALS)					
N.I.	CFT30	1	05-Up	206002	N.L.
GASKETS & O-RINGS					
204B	Pump (Front)	1	05-Up	206310	N.L.
214B	Pump (Rear)	1	05-Up	206310A	N.L.
218B	Bell Housing/Case	1	05-Up	206324	N.L.
354C	Driven End Cover	1	05-Up	206305	N.L.
438D	Drive End Cover	1	05-Up	206304	N.L.
506E	Pan	1	05-Up	206300	N.L.
METAL CLAD SEALS					
100A	Transfer Gear Cap (Bonded)	1	05-Up	206080	N.L.
114A	Axle, Right (Bell) (2wd)	1	05-Up	206076	5F9Z-1177-H
114A	Axle, Right (Bell (4wd)	1	05-Up	206076A	5F9Z-1177-G
132A	Axle, Left (Case)	1	05-Up	206077	5F9Z-1177-F
206B	Converter	1	05-Up	206070	5F9Z-7F401-AA
SEALING RINGS & KITS					
N.I.	Sealing Ring Kit	1	05-Up	206175K	N.L.
FRICTION PLATES					
236B	Reverse	3	05-Up	206110	5F9Z-7B164AA
322C	Forward	3	05-Up	206108	5F9Z-7B164CA
STEEL PLATES					
234B	Reverse	3	05-Up	206130	5F9Z-7B442BA
324C	Forward	3	05-Up	206128	5F9Z-7B442AA
PRESSURE PLATES					
238B	Reverse	1	05-Up	206150	N.L.
320C	Forward	1	05-Up	206148	N.L.
FILTERS					
360C	Filter, Cooler	1	05-Up	206013	5F9Z-7B155Y
504E	Filter (CFT30)	1	05-Up	206010	5F9Z-7A098B
BUSHINGS					
N.I.	Bushing Kit	1	05-Up	206030	N.L.
220B	Stator	1	05-Up	206036	N.L.
N.I.	Converter	1	05-Up	206031	N.L.
N.I.	Pump Cam (Inner)	1	05-Up	206035A	N.L.
N.I.	Pump Cam (Outer)	1	05-Up	206035B	N.L.
THRUST WASHERS/BEARINGS					
WASHERS					
302C	Ring Gear to Planet	1	05-Up	206255	N.L.
316C	Reverse Sun Gear Shim	1	05-Up	206247	N.L.
BEARINGS					
106A	Ball Bearing, Pinion Shaft to Cover	1	05-Up	206281	N.L.
112A	Caged Bearing, Pinion Shaft to Bell	1	05-Up	206274	N.L.
120A	Bearing & Race, Differential to Bell	1	05-Up	206292K	N.L.
126A	Bearing & Race, Differential to Case	1	05-Up	206289K	N.L.
224B	Caged Bearing, Stator	1	05-Up	206295	N.L.
310C	Thrust Bearing, Planet	1	05-Up	206238	N.L.
314C	Caged Bearing, Drive Pulley to Rear Planet	1	05-Up	206232	N.L.
336C	Caged Bearing, Driven Pulley to Bell	1	05-Up	206228	N.L.
344C	Ball Bearing, Driven Pulley to Case	1	05-Up	206229	N.L.
426D	Ball Bearing, Drive Pulley to Case	1	05-Up	206235	N.L.

ILL.		Qty.	Year	Part #	Ref. #
ELECTRICAL COMPONENTS					
410D	Switch, Internal Mode	1	05-Up	206410	N.L.
436D	Connector, Case	1	05-Up	206444	N.L.
514E	Sensor, Output Speed (OSS)	1	05-Up	206436	N.L.
N.I.	Solenoid Assembly	1	05-Up	206420	N.L.
N.I.	Solenoid, EPC	1	05-Up	206433	N.L.
N.I.	Solenoid, PCS	4	05-Up	206431	N.L.
N.I.	Plate, Solenoid Connector	1	05-Up	206435	N.L.
PUMPS					
216B	Pump Assembly (Piston Type)	1	05-Up	206500	5F9Z-7A103B
PUMP COMPONENTS					
222B	Stator Support	1	05-Up	206520	N.L.
DRUMS & COMPONENTS					
226B	Piston, Reverse	1	05-Up	206966	N.L.
228B	Return Spring, Reverse	1	05-Up	206976	N.L.
232B	Cushion, Reverse	1	05-Up	206854	N.L.
326C	Cushion, Forward	1	05-Up	206853	N.L.
328C	Retainer, Forward	1	05-Up	206984	N.L.
330C	Return Spring, Forward	1	05-Up	206974	N.L.
332C	Piston, Forward	1	05-Up	206964	N.L.
334C	Forward Clutch	1	05-Up	206554	5F9Z-7A360AA
PLANETS & COMPONENTS					
300C	Ring Gear, Forward Planet	1	05-Up	206594	7F9Z-7A153A
308C	Planet, Reverse (w/ Input Shaft)	1	05-Up	206584	7F9Z-7015A
SUN GEARS					
318C	Reverse (42T)	1	05-Up	206614	5F9Z-7D063AA
VALVE BODIES & GOVERNORS					
502E	2wd	1	05-Up	206740	5F9Z-7A100X
502E	4wd	1	05-Up	206740A	5F9Z-7A100W
DIFFERENTIALS					
130A	2wd	1	05-Up	206715A	N.L.
130A	4wd	1	05-Up	206715B	N.L.
CHAINS AND PULLEYS					
340C	Driven Pulley	1	05-Up	206712	5F9Z-7J362A
412D	Chain Snubber	2	05-Up	206701	N.L.
414D	Chain	1	05-Up	206700	5F9Z-7G249AA
420D	Drive Pulley	1	05-Up	206711	7F9Z-7J363A
CASES/HOUSINGS & COMPONENTS					
102A	Cover, Transfer Gear	1	05-Up	206757	N.L.
216B	Bell Housing (2wd)	1	05-Up	206750	N.L.
216B	Bell Housing (4wd)	1	05-Up	206750A	N.L.
348C	Case (Main)	1	05-Up	206760	N.L.
356C	Cover, Driven End	1	05-Up	206759	N.L.
440D	Cover, Drive End	1	05-Up	206758	N.L.
508E	Pan	1	05-Up	206765	N.L.
MISCELLANEOUS COMPONENTS					
108A	Gear, Transfer (2wd w/pinion)	1	05-Up	206710	N.L.
108A	Gear, Transfer (4wd w/pinion)	1	05-Up	206710A	N.L.
338C	Gear, Output (2wd)	1	05-Up	206706	N.L.
338C	Gear, Output (4wd)	1	05-Up	206706A	N.L.
428D	Nut, Drive Pulley	1	05-Up	206795	N.L.
436D	Nut, Driven Pulley	1	05-Up	206796	N.L.
N.I.	Oil Dam	1	05-Up	206698	N.L.

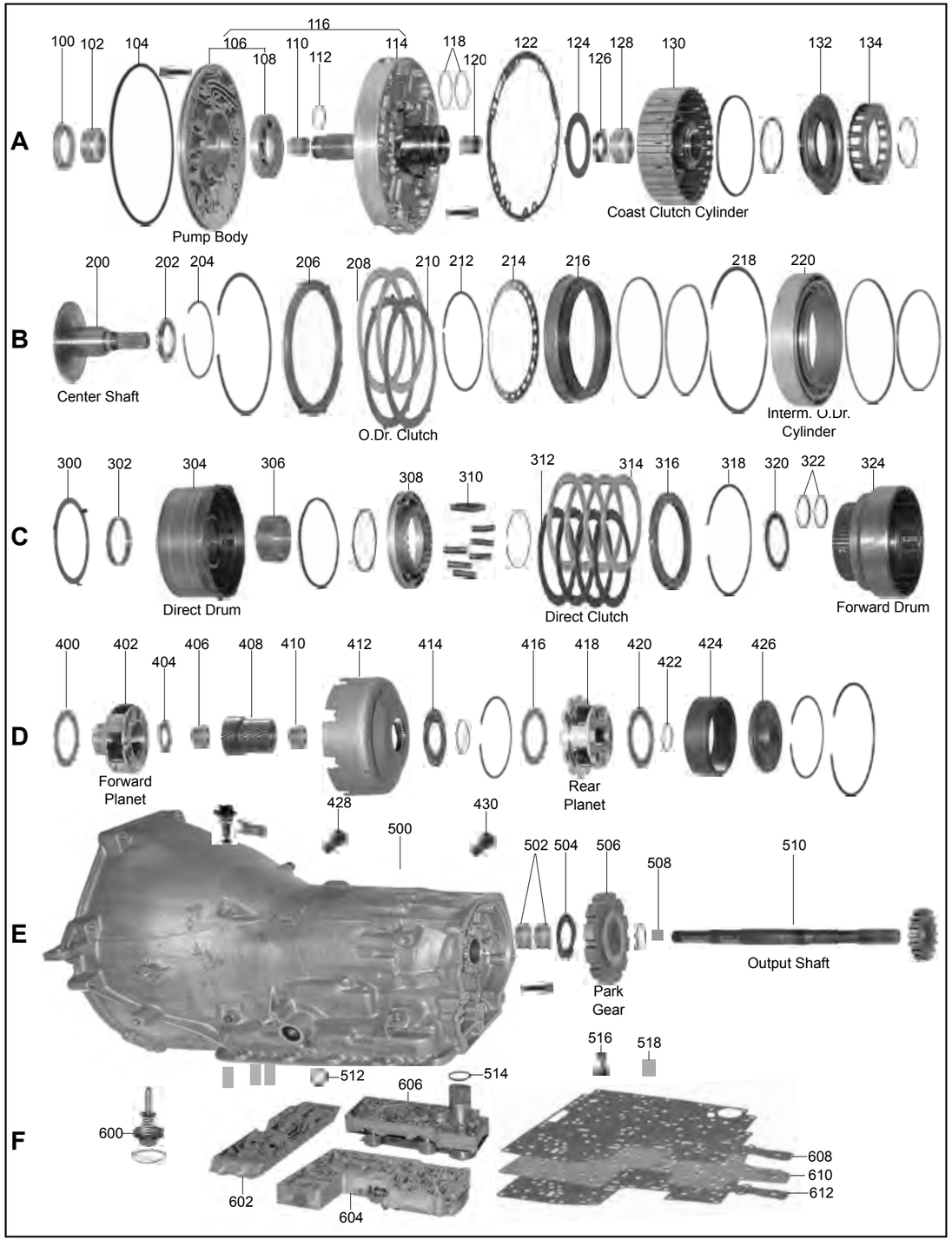
A
100 102 104 106 108 110 112 114 116 118 120 122 124 126 128 130 132 134
Pump Body
Coast Clutch Cylinder
B
200 202 204 206 208 210 212 214 216 218 220
Center Shaft
O.Dr. Clutch
Interm. O.Dr. Cylinder
C
300 302 304 306 308 310 312 314 316 318 320 322 324
Direct Drum
Direct Clutch
Forward Drum
D
400 402 404 406 408 410 412 414 416 418 420 422 424 426
Forward Planet
Rear Planet
E
428 430 500 502 504 506 508 510
Park Gear
Output Shaft
F
512 514 516 518
600 602 604 606 608 610 612

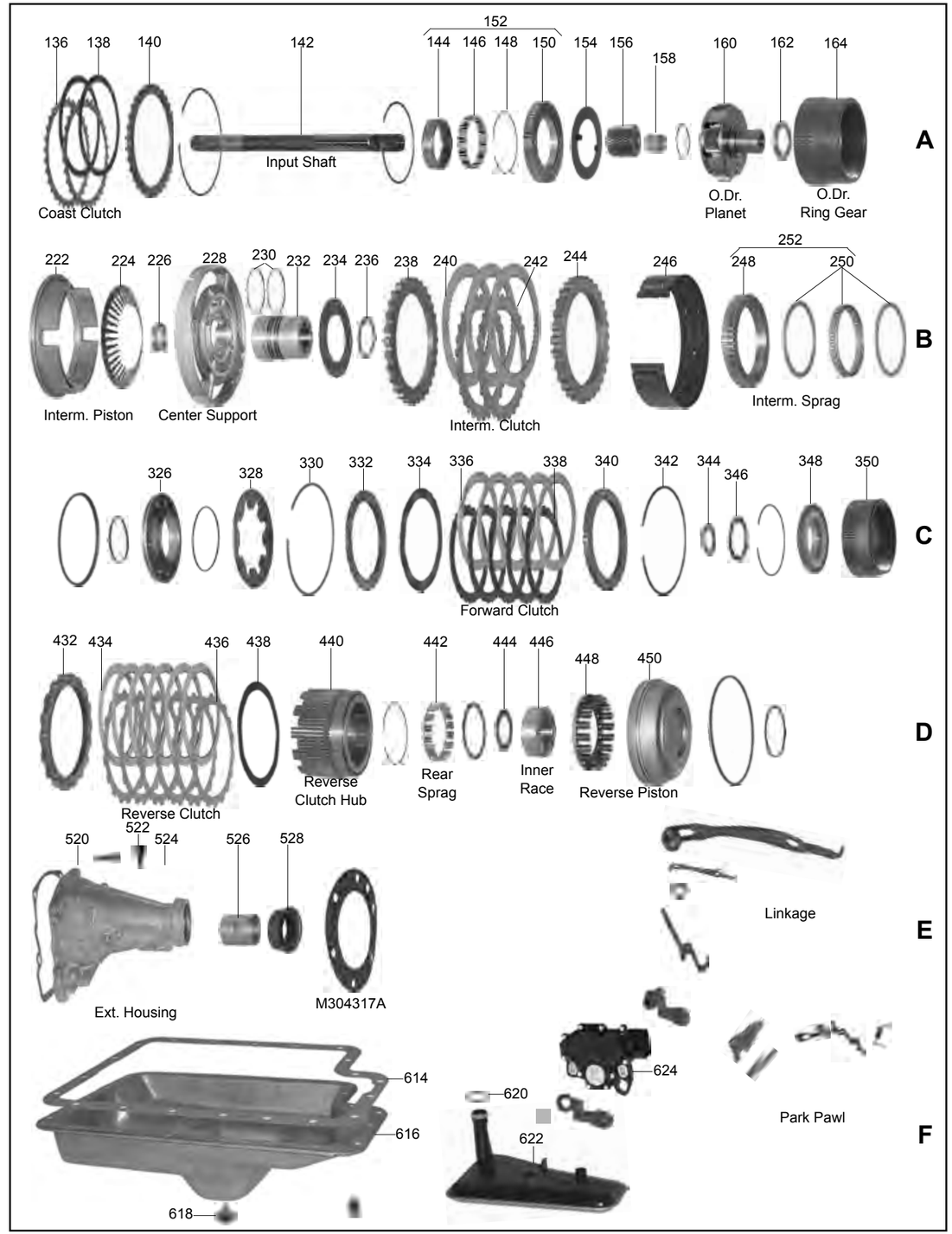
A
136 138 140 142 144 146 148 150 152 154 156 158 160 162 164
Coast Clutch
Input Shaft
O.Dr. Planet
O.Dr. Ring Gear
B
222 224 226 228 230 232 234 236 238 240 242 244 246 248 250 252
Interm. Piston
Center Support
Interm. Clutch
Interm. Sprag
C
326 328 330 332 334 336 338 340 342 344 346 348 350
Forward Clutch
D
432 434 436 438 440 442 444 446 448 450
Reverse Clutch
Reverse Clutch Hub
Rear Sprag
Inner Race
Reverse Piston
E
520 522 524 526 528
Ext. Housing
M304317A
Linkage
F
614 616 618 620 622 624
Park Pawl

ILL.		Qty.	Year	Part #	Ref. #
DELUXE KITS (SUPER KITS WITH STEELS)					
N.I.	E4OD 2wd	1	89-95	36008F	N.L.
N.I.	E4OD 2wd (with 72T reverse friction)	1	96-97	36008G	N.L.
N.I.	E4OD 4wd	1	89-95	36008E	N.L.
N.I.	E4OD 4wd (with 72T reverse friction)	1	96-97	36008H	N.L.
N.I.	4R100 2wd (w/ Pistons)	1	98-Up	36008J	N.L.
N.I.	4R100 4wd (w/ Pistons)	1	98-Up	36008K	N.L.
MASTER OVERHAUL KITS (WITH STEELS)					
N.I.	E4OD	1	89-95	36006E	N.L.
N.I.	E4OD (with 72T reverse friction)	1	96-97	36006F	N.L.
N.I.	4R100 (w/ Pistons)	1	98-Up	36006G	N.L.
MASTER OVERHAUL KITS (LESS STEELS)					
N.I.	E4OD	1	89-95	36004E	N.L.
N.I.	E4OD (with 72T reverse friction)	1	96-97	36004F	N.L.
N.I.	4R100 (w/ Pistons)	1	98-Up	36004G	N.L.
OVERHAUL KITS (WITH RINGS AND SEALS)					
N.I.	E4OD	1	89-95	36002E	N.L.
N.I.	E4OD, 4R100	1	96-Up	36002F	N.L.
BONDED PISTONS					
N.I.	Bonded Piston Kit	1	89-Up	36960K	N.L.
132A	Piston, Coast Clutch (Bonded)	1	89-Up	36969A	F81Z-7A262AA
216B	Piston, Overdrive Clutch (Bonded)	1	96-Up	36961A	F6TZ-7A262AA
GASKETS & O-RINGS					
104A	O-Ring, Front Pump	1	89-Up	36311E	E9TZ-7A248A
122A	Gasket, Pump	1	89-Up	36310E	E9TZ-7A136A
520E	Gasket, Extension Housing	1	89-Up	36305E	E9TZ-7A086B
608F	Gasket, Spacer Plate to Case (Upper) No Stripe (.015")	1	1989	36320E	E9TZ-7C155A
608F	Gasket, Spacer Plate to Case (Upper) Yellow Stripe (.015")	1	90-95	36320EA	F0TZ-7C155A
608F	Gasket, Spacer Plate to Case (Upper) Green Stripe (.015")	1	96-97	36320EB	F6TZ-7C155A
608F	Gasket, Spacer Plate to Case (Upper) White Stripe (.015")	1	98-Up	36320EC	F81Z-7C155AA
612F	Gasket, Valve Body to Spacer Plate (Lower) No Stripe	1	1989	36321E	E9TZ-7A100A
612F	Gasket, Valve Body to Spacer Plate (Lower) Yellow Stripe	1	90-95	36321EA	E9TZ-7D100B
612F	Gasket, Valve Body to Spacer Plate (Lower) Green Stripe	1	96-97	36321EB	F6TZ-7D100A
612F	Gasket, Valve Body to Spacer Plate (Lower) Blue Stripe	1	98-Up	36321EC	F81P-7D100AA
614F	Gasket, Bottom Pan	1	89-95	36300E	E9TZ-7A191A
614F	Gasket, Bottom Pan (Bonded)	1	96-Up	36300EW	F6TZ-7A191A
N.I.	Gasket, Pump Bolt Washer	9	89-Up	36309E	E9TZ-7G379A
N.I.	Gasket, Center Support (E4OD)	1	89-Up	36316E	N.L.
N.I.	Gasket, PTO Cover (4R100)	1	89-Up	36319	N.L.
N.I.	External Seal Kit	1	89-Up	36390E	N.L.
METAL CLAD SEALS					
100A	Converter	1	89-Up	36070G	E9TZ-7A248B
512E	Linkage Shaft	1	89-Up	36072	C7AZ-7B498A
528E	Rear (w/o Boot)	1	89-Up	36074	C3AZ-7052A
528E	Rear (1.125" Long Boot)	1	89-Up	36074B	C1DP-7052A
528E	Rear (.875" Long Boot)	1	89-Up	36074BA	N.L.
528E	Extension Housing (3.175" OD) (4R100) (Super Duty)	1	98-Up	36074E	F81Z-7052AA
SEALING RINGS & KITS					
N.I.	Ring Kit	1	89-Up	36175EK	N.L.
112A	Lock-Up (On Stator)	1	89-Up	36178AT	N.L.
118A	Coast	2	89-Up	36179AT	N.L.
230B	Direct Clutch	2	89-Up	36179	C6AZ-7D025A
322C	Forward	2	89-Up	36181	C6AZ-7D019A
FRICTION PLATES					
138A	Coast	2	89-Up	36112	E9TP-7B164CA
138A	Coast (High Performance)	1	89-Up	36112HP	N.L.
208B	Overdrive (32T) (Steel Drum)	2-3	98-Up	36100EA	F81P-7B164BA
208B	Overdrive (32T) (Steel Drum) (High Performance)	2-3	98-Up	36100EAHP	N.L.
208B	Overdrive (64T) (Cast Drum)	2-3	89-Up	36100	E9TP-7B164EA

ILL.		Qty.	Year	Part #	Ref. #
FRICTION PLATES (Cont.)					
240B	Intermediate (Waffle) (89-4/97)	3	89-E97	36104E	E9TP-7F219CA
240B	Intermediate (Waffle) (High Performance) (89-4/97)	3	89-E97	36104EHP	N.L.
240B	Intermediate (Radial) (5/97-Up)	3	L97-Up	36104EA	F75P-7F219BA
240B	Intermediate (Radial) (High Performance) (5/97-Up)	3	L97-Up	36104EAHP	N.L.
240B	Intermediate (Hi-Energy)	3	01-Up	36104EB	1C3Z-7B164BA
314C	Direct (.077") (Smooth)	4	89-95	36106E	E9TZ-7B164D
314C	Direct (.077") (Waffle)	3-4	96-00	36106	F6TZ-7B164B
314C	Direct (.077") (High Performance)	3-4	89-Up	36106HP	N.L.
314C	Direct (.060") (High Performance)	3-4	89-Up	36106HP	N.L.
336C	Forward (Smooth) (High Performance)	4	89-Up	36108BHP	N.L.
336C	Forward (Smooth)	4	89-Up	36108C	F2TZ-7B164A
434D	Reverse (72T)	4-6	89-97	36110	E0UP-7E312AA
434D	Reverse (72T) (High Performance)	4-6	89-97	36110HP	N.L.
434D	Reverse (24T)	4-6	98-Up	36110EA	F81Z-7B164D
434D	Reverse (24T) (High Performance) (Red)	4-6	98-Up	36110EAHP	N.L.
STEEL PLATES					
136A	Coast (60T) (Cast Drum)	2	89-Up	36132	E9TZ-7B442C
136A	Coast (60T) (Cast Drum) (Kolene)	2	89-Up	36132K	E9TZ-7B442C
136A	Coast (32T) (Stamped Steel Drum)	2	98-Up	36132E	F81Z-7B442AA
136A	Coast (32T) (Stamped Steel Drum) (Kolene)	2	98-Up	36132EK	F81Z-7B442AA
210B	Overdrive (6T)	2-3	89-Up	36120	E9TZ-7B442A
210B	Overdrive (6T) (Kolene)	2-3	89-Up	36120K	E9TZ-7B442A
242B	Intermediate (.080")	2-3	89-Up	36124	E9TZ-7B442B
242B	Intermediate (.080") (Kolene)	2-3	89-Up	36124K	E9TZ-7B442B
242B	Intermediate (.125")	2-3	89-Up	36145	E9TZ-7B066C
242B	Intermediate (.125") (Kolene)	2-3	89-Up	36145K	E9TZ-7B066C
334C	Cushion, Forward Clutch	1	89-Up	36853	D6AZ-7E085B
338C	Forward & Direct	8-9	89-Up	36126	C6AZ-7B442A
338C	Forward & Direct (Kolene)	8-9	89-Up	36126K	E9TZ-7B442D
338C	Forward & Direct (Oversized)	AR	89-Up	36126X	N.L.
436D	Reverse .068"	4-6	89-Up	36130	E9TZ-7B442E
436D	Reverse .068"(Kolene)	4-6	89-Up	36130K	E9TZ-7B442E
436D	Reverse .081" (Oversized)	AR	89-Up	36130X	C6AZ-7B442B
438D	Cushion, Reverse Clutch	1	96-Up	36854	F6TZ-7E085A
N.I.	Steel Module, E4OD	1	89-Up	36139E	N.L.
N.I.	Steel Module, 4R100	1	98-Up	36139ED	N.L.
FRICTION & STEEL KITS					
N.I.	Friction & Steel Kit, Intermediate (Z-PAK)	1	89-Up	36104EK	RZP-004
PRESSURE PLATES					
140A	Coast (32T) (Steel Drum)	1	98-Up	36152B	F81Z-7B066AA
140A	Coast (60T) (Cast Drum)	1	89-97	36152	E9TZ-7B066E
206B	Overdrive (.490") (Flat)	1	89-Up	36140	E9TZ-7B066B
206B	Overdrive (.320") (Flat)	1	93-Up	36140B	3C3Z-7B066CB
206B	Overdrive (.455" Step, .320") (PTO)	1	93-Up	36140C	3C3Z-7B066EA
242B	Intermediate (Front) (.125")	3	89-Up	36145	E9TZ-7B066C
244B	Intermediate (Rear) (.326")	1	89-Up	36144B	F81Z-7B066BA
244B	Intermediate (Rear) (.415")	1	89-Up	36144A	E9TZ-7B066D
316C	Direct (.337") Flat	1	89-Up	36146	C6AZ-7B066B
316C	Direct (.220") Flat	1	89-Up	36146HD	N.L.
332C	Forward Beveled (Bottom)	1	89-Up	36149	C6AZ-7B066A
340C	Forward (.337") Flat (Top)	1	89-Up	36146	C6AZ-7B066B
340C	Forward (.220") Flat (Top)	1	89-Up	36146HD	N.L.
432D	Reverse .400" (18T)	1	89-Up	36150	C6AZ-7B066C
432D	Reverse .550" (16T)	1	89-Up	36150E	E9TZ-7B066A
FILTERS					
516E	Shift Solenoid (Installs in Valve Body Plate)	1	89-Up	36016	E9TZ-7G308A
518E	Accumulator Regulator w/ Spring (Inside Case)	1	89-Up	36018	F1TP-7H190A
622F	2wd	1	89-Up	36010E	YC3Z-7A098AA
622F	4wd	1	89-Up	36010EA	YC3Z-7A098BA

ILL.		Qty.	Year	Part #	Ref. #
FILTER KITS					
N.I.	Filter Kit (2wd) (Cork Gasket)	1	89-95	36011E	N.L.
N.I.	Filter Kit (2wd) (Bonded Gasket)	1	96-Up	36011G	N.L.
N.I.	Filter Kit (4wd) (Bonded Gasket)	1	96-Up	36011H	N.L.
N.I.	Filter Kit (4wd) (Cork Gasket)	1	89-95	36011EA	N.L.
BANDS					
246B	Intermediate	1	89-Up	36022E	E9TP-7D034BA
BUSHINGS					
N.I.	Bushing Kit, E4OD (4R100 Also Sell 36038G, 36066D)	1	89-97	36030E	N.L.
102A	Pump Body	1	89-Up	36034E	N.L.
110A	Stator (Front)	1	89-Up	36036	C6AZ-7B261C
120A	Stator (Rear)	1	89-Up	36037	C6AZ-7D018A
128A	Coast Clutch Drum (E4OD)	1	89-Up	36038	E9TP-7A620AA
128A	Coast Clutch Drum (4R100)	1	98-Up	36038G	N.L.
158A	Overdrive Sun Gear	1	89-Up	36036	C6AZ-7B261C
302C	Direct Drum (Front) (.359" Wide)	1	89-Up	36046B	C6AZ-7D046B
306C	Direct Drum (Rear) (1.110" Wide)	1	98-Up	36046A	E9TP-7D046B
306C	Direct Drum (Rear) (1.240" Wide)	1	89-Up	36046	C6AZ-7D046A
406D	Sun Gear	2	89-Up	36040	C6AZ-7D065A
502E	Case, Front w/ 3 Oil Grooves	1	89-Up	36064	C6AZ-7025D
502E	Case, Rear No Oil Grooves	1	89-94	36064B	F2TZ-7025B
502E	Case, Rear w/ 1 Oil Groove	1	95-Up	36064BA	36008D
502E	Case (1 Piece Type)	1	89-Up	36064HD	N.L.
508E	Output Shaft Pilot	1	89-Up	56062	N.L.
508E	Bearing, Output Shaft Pilot	1	89-Up	56268	N.L.
526E	Extension Housing (Brass) (E4OD)	1	89-97	36066	B5AZ-7A034A
526E	Extension Housing (Teflon Coated) (E4OD)	1	89-97	36066T	F2TZ-7A034A
526E	Extension Housing (Teflon Coated) (4R100)	1	98-Up	36066D	F81Z-7A034AB
THRUST WASHERS/BEARINGS					
WASHERS					
N.I.	Washer Kits (w/ 4 & 6 Pinion Planets)	1	89-Up	36200E	N.L.
124A	Stator Support	1	89-Up	36210G	F1TZ-7D014A
154A	Overdrive Planet to Overdrive Sprag (2 Inner Tabs) (Metal)	1	89-Up	36214	E9TZ-7L339A
154A	Overdrive Planet to Overdrive Sprag (2 Inner Tabs) (Plastic)	1	89-Up	36214A	F1TZ-7L399A
154A	Overdrive Planet (1 Inner Tab) (4R100)	1	89-Up	36214B	F81Z-7L339AA
234B	Center Support to Direct Drum	1	89-Up	36225	F1TZ-7L326A
300C	Intermediate Drum to Sprag	1	89-Up	36227	E9TZ-7G401A
320C	Direct Drum to Forward Drum	1	89-Up	36229A	E9TZ-7C096A
346C	Forward Drum to Hub (3 Tabs)	1	89-Up	36231	C9AZ-7D090A
400D	Planet to Hub (3 Tab) (Narrow) (89-8/91)	2-3	89-E91	36235A	F0TZ-7A166C
400D	Planet to Hub (3 Tab) (Wide) (9/91-Up)	2-3	L91-Up	36235AA	F0TZ-7A166D
400D	Planet to Hub (4 Tab)	2-3	89-Up	36235	E9TZ-7A166A
504E	Parking Gear to Case	1	89-Up	36263	D3TZ-7B368A
BEARINGS					
N.I.	Bearing Kit	1	89-97	36201E	SBK-F5
126A	Bearing, Stator to Overdrive Sun Gear	1	89-Up	36211	F6TZ-7E486AA
162A	Bearing, Overdrive Planet to Hub	1	89-Up	36217	E6DZ-7F240A
202B	Bearing, Overdrive Hub to Center Support	1	89-Up	36254C	E6DZ-7G178A
226B	Ball Bearing, Center Support	1	89-Up	36224A	E6DZ-76178A
236B	Bearing, Center Support to Forward Drum	1	89-Up	66211	E1FZ-7F374A
344C	Bearing, Forward Drum to Forward Planet (1 Piece Type)	1	89-Up	36238A	E0AZ-7F231A
344C	Bearing w/ Race, Sun Gear (1 Piece Type)	1	89-Up	36238A	E0AZ-7F231A
400D	Bearing, Forward Planet to Hub	1	97-Up	36235CA	F81Z-7A166AA
444D	Bearing w/ Races, Output Hub to Sprag Race (Updated)	1	89-Up	36254C	E6DZ-7G178A
504E	Bearing, Park Gear (4R100)	1	98-Up	36263B	F81Z-7B368AA
508E	Bearing, Output Shaft Pilot	1	89-Up	56268	N.L.
N.I.	Bearing, Overdrive Planet (Captured)	1	89-Up	36211	F6TZ-7E486AA
N.I.	Shim, Output Hub .010"	1	89-Up	36255A	N.L.
N.I.	Shim, Output Hub .020"	1	89-Up	36255B	N.L.
N.I.	Shim, Output Hub .030"	1	89-Up	36255C	N.L.

ILL.		Qty.	Year	Part #	Ref. #
ELECTRICAL COMPONENTS					
522E	Sensor, Output Speed (VSS) (4R100)	1	98-Up	36438	F81Z-7M101AA
522E	Sensor, Input Speed (TSS) (w/o PTO) (4R100)	1	98-Up	36438	F81Z-7M101AA
522E	Sensor, Input Speed (TSS) (w/ PTO) (4R100)	1	98-Up	36438A	F81Z-7M101BA
606F	Solenoid Assembly (E4OD)	1	89-94	36420	E9TZ-7G391A
606F	Solenoid Assembly (E4OD) (Non PWM)	1	95-Up	36420B	F81Z-7G391BA
606F	Solenoid Assembly (4R100) (Non PWM)	1	98-Up	36420B	F81Z-7G391BA
606F	Solenoid Assembly (4R100) (PWM)	1	98-Up	36420D	F81Z-7G391CB
624F	Manual Lever Position Switch (MLPS) (Retros 89-96)	1	89-96	36410A	F5TZ-7A247AA
624F	Manual Lever Position Switch (MLPS)	1	97-Up	36410C	F7TZ-7F293AA
N.I.	Sensor, Output Speed (VSS) (Analog - Cable Driven)	1	89-Up	36436	E9TP-9E731AA
N.I.	Sensor, Output Speed (VSS) (Analog - Gear Driven) (E4OD)	1	97-Up	36436C	F65Z-9E731AB
N.I.	Sensor, Output Speed (VSS) (Digital - Gear Driven) (E4OD)	1	94-98	86436A	E9LZ-9E731A
N.I.	Repair Kit, External Wire Harness, Plugs Into Connector	1	89-94	36445EK	N.L.
N.I.	Repair Kit, External Wire Harness, Plugs Into Connector	1	95-Up	36445EAK	N.L.
VALVE BODY RECALIBRATION KITS					
N.I.	Shift Kit®, E4OD, 4R100 (Transgo®)	1	89-Up	T36165E	SK® E4OD
N.I.	Valve Body Kit, E4OD,4R100 (Superior)	1	89-Up	S36165E	KE4OD
N.I.	Reprogramming Kit™, E4OD HD & Hi-Perf (Gas or Diesel) (Transgo®)	1	89-Up	T36169E	E4OD-HD2
N.I.	Reprogramming Kit™, 4R100, E4OD HD & HP (Transgo®)	1	98-06	T36169EA	4R100-HD2
VALVE BODY COMPONENTS					
N.I.	Accumulator Spring Kit (Fix In Valve Body) (Set of 3)	1	89-Up	36926BK	N.L.
N.I.	Check Ball, Valve Body (1/4")	AR	89-Up	76741A-5	E0AZ-7E195B
N.I.	Check Ball, Valve Body (5/16")	AR	89-Up	76741-5	E7DZ-7E195A
N.I.	Spring Kit, Reverse (No Bang)	1	89-Up	36741GK-3	N.L.
N.I.	Valve, 2-3 Shift (w/ F6 VB Casting) (Pack of 3) (Transgo®)	1	96-Up	T36741SAK	E4-VL-23
N.I.	Valve Kit, Accum. Reg. (1-2 & 2-3) (T-36948-12 Recommended) (Sonnax)	1	89-Up	S36741EAK	36948-13K
N.I.	Valve Kit, Accum. Reg. (3-4) (T-36948-12 Recommended) (Sonnax)	1	89-Up	S36741EK	36948-09K
PUMPS					
106A	Pump Body w/ Gears (4R100)	1	98-Up	36510DA	N.L.
116A	Pump (Cast Coast Drum) (E9, F1, F5, F8 Cast)	1	89-Up	36500CA	F81Z-7A103BA
116A	Pump (Steel Coast Drum) 4R100 Non PWM	1	98-Up	36500D	XC3Z-7A103EA
116A	Pump (Steel Coast Drum) 4R100 PWM	1	98-Up	36500DA	F81Z-7A103BA
PUMP COMPONENTS					
108A	Pump Gears (w/ 10T Inner Gear)	1	89-94	36530A	N.L.
108A	Pump Gears (w/ 9 Lobe Inner Gear)	1	89-Up	36530B	36438A-01K
N.I.	TCC Conversion Kit, Converts PWM to On/Off (4R100)	1	98-Up	A36507C	4R100-LU
N.I.	Valve Assembly, Converter Drainback (Pump Stator)	1	89-Up	36507E-1A	E9TZ-7H132A
DRUMS & COMPONENTS					
130A	Coast Clutch (Cast)	1	89-97	36559	E9TZ-7G387A
130A	Coast Clutch (Stamped Steel) (w/o PTO Drive Gear)	1	98-Up	36559A	YC3Z-7G387AA
130A	Coast Clutch (Stamped Steel) (w/ PTO Drive Gear)	1	98-Up	36559B	YC3Z-7G387BA
132A	Piston, Coast Clutch (Bonded)	1	89-Up	36969A	F81Z-7A262AA
134A	Diaphragm Spring, Coast Clutch	1	89-Up	36979	E9TZ-7B070C
214B	Diaphragm Spring, Overdrive Clutch	1	89-Up	36971	E9TZ-7B070A
216B	Piston, Overdrive Clutch (Bonded)	1	96-Up	36961A	F6TZ-7A262AA
220B	Cylinder, Intermediate/ Overdrive Clutch (Aluminum)	1	89-95	36545	E9TZ-7G384AA
220B	Cylinder, Intermediate/ Overdrive Clutch (Uses Bonded Piston)	1	96-Up	36545A	F6TZ-7G384AA
224B	Diaphragm Spring, Intermediate Clutch	1	89-Up	36972	E9TZ-7B070B
304C	Direct (4 Clutch) (Washer Design)	1	95-Up	36555CA	N.L.
304C	Direct (4 Clutch)	1	98-Up	36555CB	N.L.
304C	Direct (5 Clutch) (Washer Design)	1	89-Up	36555D	F81Z-7D044BA
304C	Direct (5 Clutch)	1	98-Up	36555DA	YC3Z-7D044BA
304C	Direct Drum Conversion Kit, Ratchet to Sprag	1	98-Up	36555EK	N.L.
308C	Piston, Direct Clutch (E4OD)	1	89-Up	36965E	E9TZ-7A262C
308C	Piston, Direct Clutch (4R100)	1	98-Up	36965	YC3Z-7A262AA
310C	Springs w/ Retainer, Direct Clutch Return	1	89-96	36975B	E9TZ-7F235A
324C	Forward (4 Clutch)	1	89-98	36554H	F81Z-7A360AA
326C	Piston, Forward Clutch	1	89-Up	36964	D6AZ-7A262A
328C	Spring, Forward Clutch Disc Spring .094"	1	89-Up	36974B	D9AZ-7B070A
440D	Clutch Hub, Reverse (12 Lug) (Cast Iron)	1	89-E97	36576	F3TZ-7B067A
440D	Clutch Hub, Reverse (24 Lug) (Stamped Steel)	1	L97-Up	36576C	F7TZ-7B067AC
448D	Springs w/ Retainer, Reverse Clutch Return 3.00" ID, 5.190" OD	1	89-Up	36976C	F6TZ-7D406A

ILL.		Qty.	Year	Part #	Ref. #
PLANETS & COMPONENTS					
160A	Overdrive (4 Gear, Steel) 1.875" Long Hub (Also Sell One 36214B)	1	89-93	36580BC	F4TZ-7B446B
160A	Overdrive (4 Gear, Steel) 1 7/16" Long Hub	1	94-97	36580BE	F5TZ-7B446A
160A	Overdrive (4 Gear, Steel) 1 7/16" Long Hub	1	98-Up	36580CA	N.L.
160A	Overdrive Planet Kit, w/ Input Shaft (Retros All E4OD, 4R100)	1	89-Up	36580BCK	F4TZ-7B446B
164A	Ring Gear, Overdrive Planet	1	89-97	36590	F6TZ-7A153AA
164A	Ring Gear, Overdrive Planet	1	98-Up	36590B	F81Z-7A153AA
348C	Hub, Forward Planet Ring Gear (Washer Type)	1	89-96	36602B	N.L.
348C	Hub, Forward Planet Ring Gear (Bearing Type)	1	97-Up	36602BA	N.L.
350C	Ring Gear, Forward Planet	1	89-Up	36592B	F81Z-7D392AA
402D	Forward (4 Gear, Washer Type)	1	89-96	36582B	E9TZ-7A398A
402D	Forward (4 Gear, Bearing Type)	1	97-Up	36582BA	F7TZ-7A398BA
402D	Forward (6 Gear)	1	97-Up	36582D	F81Z-7A398CA
418D	Rear (3 Gear, w/ 12 Lug Hub)	1	89-Up	36584B	F7TZ-7D006AA
418D	Rear (4 Gear, w/ 12 Lug Hub)	1	89-96	36584C	F7TZ-7D006A
418D	Rear (4 Gear, w/ 24 Lug Hub)	1	L97-Up	36584CA	F7TZ-7D006BA
418D	Rear (6 Gear, Steel, w/ 12 Lug Hub)	1	89-Up	36584E	N.L.
418D	Rear (6 Gear, Steel, w/ 24 Lug Hub)	1	L97-Up	36584D	YC3Z-7D006CB
426D	Hub, Output (Bearing Type)	1	89-Up	36604C	F81Z-7D164AA
426D	Hub & Race Kit	1	89-Up	36604CK	N.L.
SUN GEARS					
156A	Sun Gear, Overdrive	1	89-97	36610	E9TZ-7D063AA
156A	Sun Gear, Overdrive	1	98-Up	36610A	F81Z-7D063A
408D	Sun Gear, Forward	1	89-Up	36612A	E9TZ-7D063A
ONE WAY CLUTCHES					
146A	Roller,Overdrive (12 Roller) Black Plastic 3.285" Diameter	1	98-Up	36650BB	F81Z-7A089AB
146A	Roller,Overdrive (12 Roller) Tan Plastic 4.086" Diameter	1	95-Up	36650BA	F5TZ-7A089A
146A	Sprag, Overdrive (34 Elements, w/ Metal Cage)	1	89-94	36650B	E9TP-7G381AE
152A	Roller Assembly, Overdrive (12 Roller) (Sprag, Cam, Outer Race)	1	89-Up	36640	F5TZ-7A089A
152A	Sprag Assembly, Overdrive (34 Lugs) (Sprag, Cam & Outer Race)	1	89-94	36640B	E9TZ-7A089A
248B	Outer Race, Intermediate Sprag	1	89-Up	36663	N.L.
250B	Sprag, Intermediate One-Way (34 Elements)	1	89-Up	36652	E9TZ-7F271A
250B	Sprag, Intermediate One-Way (45 Elements) Heavy Duty	1	89-Up	36652A	E9TP-7F271AB
252B	Sprag Assembly, Intermediate (Overrun Sprag)	1	89-Up	36642	E9TZ-7A089B
442D	Roller, Rear (16 Roller w/ Plastic Cage)	1	89-E97	36654D	F3TZ-7A089A
442D	Roller, Rear (17 Roller w/ Plastic Cage)	1	L97-Up	36654E	F7TZ-7A089AA
446D	Inner Race, Low Roller (3.200" OD) (16 Roller)	1	89-E97	36664E	E9TZ-7D171AA
446D	Inner Race, Low Roller (3.400" OD) (17 Roller)	1	L97-Up	36664	F7TZ-7D171AA
446D	Inner Race Kit, Low Roller (3.200" OD) (16 Roller)	1	89-E97	36664CK	N.L.
446D	Inner Race Kit, Low Roller (3.400" OD) (17 Roller)	1	L97-Up	36664EK	36429E-K
SHELLS & SUPPORTS					
228B	Center Support Plate (Aluminum Half Only)	1	89-Up	36630	E9TZ-7A130B
232B	Center Support Kit, w/ Hub, Shaft & Cup Plug (Bearing Type)	1	89-04	36636BK	F4TZ-7A130B
412D	Shell, Input (2nd Design)	1	89-Up	36622A	F81Z-7D064AA
412D	Shell, Input (2nd Design) (Hardened)	1	89-Up	36622B	YC3Z-7D064BA
SHAFTS					
142A	Input Shaft, HD (13.625" Long) (Upgraded Steel, Heat Treated)	1	98-Up	A36670HD	N.L.
142A	Input Shaft (13.625" Long)	1	89-Up	36670C	F81Z-7017EA
506E	Gear, Parking	1	89-Up	36690A	E9TZ-7A233A
510E	Output Shaft (2wd) (20" 7T Speed-O-Gear) (w/ Cup Plug)	1	94-Up	36678JE	N.L.
510E	Output Shaft (2wd) (w/ Reluctor Wheel) (4R100)	1	98-Up	36678JH	N.L.
510E	Output Shaft (4wd) (14 9/32") (w/ Cup Plug)	1	94-Up	36678EB	N.L.
510E	Output Shaft (4wd) (w/ Reluctor Wheel) (4R100)	1	98-Up	36678EC	N.L.
VALVE BODIES & GOVERNORS					
602F	Accumulator Assembly (2nd Design)	1	90-95	36742A	F6TZ-7G422A
602F	Accumulator Assembly (3rd Design)	1	96-97	36742B	F6TZ-7G422B
602F	Accumulator Assembly (4th Design)	1	98-Up	36742C	N.L.
604F	Valve Body (E4OD) F1, F0 Cast	1	90-95	36740-4	N.L.
604F	Valve Body (E4OD) F6 Cast	1	96-98	36740-5	N.L.
604F	Valve Body (4R100) F6 Cast (Non PTO)	1	98-Up	36740-6	N.L.
604F	Valve Body (4R100) F8 Cast (w/ PTO)	1	98-Up	36740-7	N.L.

ILL.		Qty.	Year	Part #	Ref. #
CASES/HOUSINGS & COMPONENTS					
500E	Case, 7.3L w/o PTO (4R100)	1	98-Up	36760HB	N.L.
524E	Extension Housing (2wd) (Cast # F2 Thru F6)	1	92-97	36770D	F85Z-7A039DA
524E	Extension Housing (2wd) (4R100) (1.890" Bushing ID)	1	98-Up	36770HB	N.L.
524E	Extension Housing (4wd) (E4OD)	1	92-Up	36770EA	F81Z-7H183AA
524E	Extension Housing (4wd) (4R100)	1	92-Up	36770HA	N.L.
616F	Pan (2wd)	1	89-95	36765C	F0TZ-7A194AA
616F	Pan (2wd) (Molded Gasket Style)	1	96-Up	36765CA	N.L.
616F	Pan (4wd)	1	89-95	36765D	F7TZ-7A194DA
616F	Pan (4wd) (Molded Gasket Style)	1	96-Up	36765DA	N.L.
SNAP RINGS					
212B	Holds Overdrive Return Spring In Drum (Update) (Spiral)	1	89-Up	36862	36744-01
318C	Forward & Direct Clutch Top Pressure Plate (.058")	1	89-Up	36878	377126-S
318C	Forward & Direct Clutch Top Pressure Plate (.076")	1	89-Up	36878B	377127-S
318C	Forward & Direct Clutch Top Pressure Plate (.085")	1	89-Up	36878C	377128-S
318C	Forward & Direct Clutch Top Pressure Plate (.094")	1	89-Up	36878D	377444-S
422D	Output Shaft (Front) .075"	1	89-Up	36894	387031-S5
N.I.	Holds Pressure Plate In Coast Clutch Cylinder (.055")	1	89-Up	36870	E9TZ-7D483A
MISCELLANEOUS COMPONENTS					
N.I.	Bolt, Center Support Bolt	2	89-Up	36783	E9TZ-7Z059B
N.I.	Bolt, Intermediate Clutch Cylinder	1	89-Up	36783A	E9TZ-7Z059A
N.I.	Spring & Roller Detent	1	89-91	36991A-2	F2TZ-7E332A
428D	Cooler Bypass Fitting (w/o Ball) (Front)	1	89-Up	36996B	F81Z7Z152AA
428D	Cooler Bypass Fitting (w/ Ball) (E4OD) (90 Degree Front Fitting)	1	89-Up	36999C	2C3Z-7H322AA
428D	Cooler Bypass Tube (4R100) (Straight Front Fitting)	1	89-Up	36999D	F81Z-7H322AA
N.I.	Drain Back Valve, 5/16" (Installs in Cooler Line w/o using Hoses or Clamps)	1	89-Up	36761C	F0TZ-7D174A
N.I.	Drain Back Valve, 3/8" (Installs in Cooler Line w/o using Hoses or Clamps)	1	89-Up	36761D	N.L.
SERVOS & ACCUMULATORS					
600F	Piston, Intermediate Servo (Molded) (2nd Design)	1	89-Up	36907E	F6TZ-7D021A
N.I.	Spring, 1-2, 2-3, 3-4 Accumulator Outer (Blue)	1	89-Up	36926A	N.L.
N.I.	Spring, 1-2, 2-3, 3-4 Accumulator Outer (White)	1	89-Up	36926AA	N.L.
N.I.	Spring Kit, Accumulator Outer Spring (Blue) (Package of 3) 2nd, 3rd, 4th, Rev	1	89-Up	36926AK	N.L.
N.I.	Accumulator Spring Kit (Fix In Valve Body) (Set of 3)	1	89-Up	36926BK	N.L.
TECHNICAL MANUALS					
N.I.	Tech Manual, E4OD	1	89-Up	36400E	83-E4ODTM
N.I.	Tech Manual, 4R100	1	89-Up	36400EA	83-4R100TM
N.I.	Tech Manual, 4R100 (Update)	1	89-Up	36400EU	TM-4R100
N.I.	Handbook, E4OD (Update)	1	89-91	36400EH	83-E4ODTM-U1
TOOLS					
N.I.	Clutch Remover / Installer	1	89-Up	T-2805	N.L.
N.I.	Pump Puller Adapters	1	89-Up	T-2806	N.L.
N.I.	Pump Alignment Band	1	89-Up	T-2862	N.L.
N.I.	Intermediate Piston Belleville Spring Compressor	1	89-Up	T-3601	N.L.

ILL.		Qty.	Year	Part #	Ref. #
MASTER OVERHAUL KITS (WITH STEELS)					
N.I.	HD-10	1	04-Up	133006R	N.L.
MASTER OVERHAUL KITS (LESS STEELS)					
N.I.	HD-10	1	04-Up	133004R	N.L.
OVERHAUL KITS (WITH RINGS AND SEALS)					
N.I.	HD-10	1	04-Up	133002R	N.L.
GASKETS & O-RINGS					
N.I.	Module Cover	1	04-Up	133301R	N.L.
N.I.	Module Housing	1	04-Up	133301R	N.L.
N.I.	Heat Sink Cover	1	04-Up	133303R	N.L.
METAL CLAD SEALS					
N.I.	Input	1	04-Up	133070R	N.L.
N.I.	Manual Valve	1	04-Up	133072R	N.L.
N.I.	Axle, Right (Bell)	1	04-Up	133076R	N.L.
N.I.	Axle, Left (Case)	1	04-Up	133077R	N.L.
SEALING RINGS & KITS					
N.I.	Sealing Ring Kit	1	04-Up	133175RK	N.L.
FRICTION PLATES					
N.I.	End Clutch (External Teeth)	2	04-Up	133100R	N.L.
STEEL PLATES					
N.I.	End Clutch (Internal Teeth)	2	04-Up	133120R	N.L.
PRESSURE PLATES					
N.I.	End Clutch	1	04-Up	133140R	N.L.
FILTERS					
N.I.	HD-10	1	04-Up	133010R	N.L.
THRUST WASHERS/BEARINGS					
WASHERS					
N.I.	Shim, Input Gear	AR	04-Up	133204R	N.L.
N.I.	Shim, Input Armature	AR	04-Up	133205R	N.L.
N.I.	Washer, Pump Drive Gear	1	04-Up	133209R	N.L.
N.I.	Shim, Output Gear	AR	04-Up	133272R	N.L.
N.I.	Shim, Output Armature	AR	04-Up	133273R	N.L.
BEARINGS					
N.I.	Ring Gear to Planet	1	04-Up	133238R	N.L.
N.I.	Sun Gear to Planet	1	04-Up	133241R	N.L.
N.I.	Input Drive Bearing & Race (Front)	1	04-Up	133274RK	N.L.
N.I.	Input Drive Bearing & Race (Rear)	1	04-Up	133279RK	N.L.
N.I.	Output Driven Bearing & Race (Front)	1	04-Up	133281RK	N.L.
N.I.	Output Driven Bearing & Race (Rear)	1	04-Up	133283RK	N.L.
N.I.	Differential to Case Bearing & Race	1	04-Up	133289RK	N.L.
N.I.	Differential to Bell Bearing & Race	1	04-Up	133292RK	N.L.
ELECTRICAL COMPONENTS					
N.I.	Switch, MLPS	1	04-Up	133410R	N.L.
N.I.	Solenoid, EPC	1	04-Up	133431R	N.L.
N.I.	Switch, TOT	1	04-Up	133439R	N.L.
N.I.	Sensor, Post Block (White)	1	04-Up	133439RD	N.L.
N.I.	Sensor, Post Block (Black)	1	04-Up	133439RC	N.L.
N.I.	Sensor, Circuit Board (Large)	1	04-Up	133439RA	N.L.
N.I.	Sensor, Circuit Board (Small)	1	04-Up	133439RB	N.L.
N.I.	Harness, Main Cable	1	04-Up	133445RF	N.L.
N.I.	Harness, External (Triangular)	1	04-Up	133445RC	N.L.
N.I.	Harness, External (Small Rectangular)	1	04-Up	133445RA	N.L.

ILL.		Qty.	Year	Part #	Ref. #
ELECTRICAL COMPONENTS (Cont.)					
N.I.	Harness, External (Large Rectangular)	1	04-Up	133445RB	N.L.
N.I.	Harness, Internal (Small Round)	1	04-Up	133445RD	N.L.
N.I.	Harness, Internal (Large Round)	1	04-Up	133445RE	N.L.
PUMPS					
N.I.	Pump Assembly	1	04-Up	133500R	N.L.
PUMP COMPONENTS					
N.I.	Pump Body	1	04-Up	133510R	N.L.
N.I.	Pump Cover	1	04-Up	133520R	N.L.
N.I.	Pump Gears	1	04-Up	133530R	N.L.
N.I.	Pump Plate	1	04-Up	133544R	N.L.
N.I.	Pump Shaft	1	04-Up	133671R	N.L.
PLANETS & COMPONENTS					
N.I.	Planet w/Input	1	04-Up	133582R	N.L.
N.I.	Ring Gear	1	04-Up	133592R	N.L.
SUN GEARS					
N.I.	Sun Gear	1	04-Up	133612R	
ONE WAY CLUTCHES					
N.I.	Input	1	04-Up	133658R	N.L.
N.I.	Spacer, One Way Clutch	2	04-Up	133658R-1	N.L.
SHELLS & SUPPORTS					
N.I.	One Way Clutch Support	1	04-Up	133630R	N.L.
CASES/HOUSINGS & COMPONENTS					
N.I.	Bell Housing	1	04-Up	133750R	N.L.
N.I.	Cover, Module	1	04-Up	133754R	N.L.
N.I.	Module Housing	1	04-Up	133755R	N.L.
N.I.	Cover, Circuit Board	1	04-Up	133756R	N.L.
N.I.	Cover, Heat Sink	1	04-Up	133758R	N.L.
N.I.	Cover, End	1	04-Up	133759R	N.L.
N.I.	Case (Main)	1	04-Up	133760R	N.L.
MISCELLANEOUS COMPONENTS					
N.I.	Module, Primary (Short Wire)	1	04-Up	133455RA	N.L.
N.I.	Module, Secondary (Long Wire)	1	04-Up	133455RB	N.L.
N.I.	Ground Strap	4	04-Up	133448R	N.L.
N.I.	Motor Coil, Input (#1)	1	04-Up	133456RA	N.L.
N.I.	Motor Coil, Output (#2)	1	04-Up	133456RB	N.L.
N.I.	Armature, Input (#1)	1	04-Up	133457RA	N.L.
N.I.	Armature, Output (#2)	1	04-Up	133457RB	N.L.
N.I.	Revolution Sensor, Input (#1)	1	04-Up	133458RA	N.L.
N.I.	Revolution Sensor, Output (#2)	1	04-Up	133458RB	N.L.
N.I.	Capacitor, Main	3	04-Up	133459R	N.L.
N.I.	Drive Gear, Input	1	04-Up	133705R	N.L.
N.I.	Drive Gear, Output	1	04-Up	133706R	N.L.
N.I.	Idler Gear	1	04-Up	133714R	N.L.
N.I.	Differential	1	04-Up	133715R	N.L.
N.I.	Piston, End Clutch	1	04-Up	133960R	N.L.
N.I.	Return Spring, End Clutch	1	04-Up	133980R	N.L.
N.I.	Connector, Post	6	04-Up	133435R	N.L.
N.I.	Parking Pawl	1	04-Up	133995R	N.L.

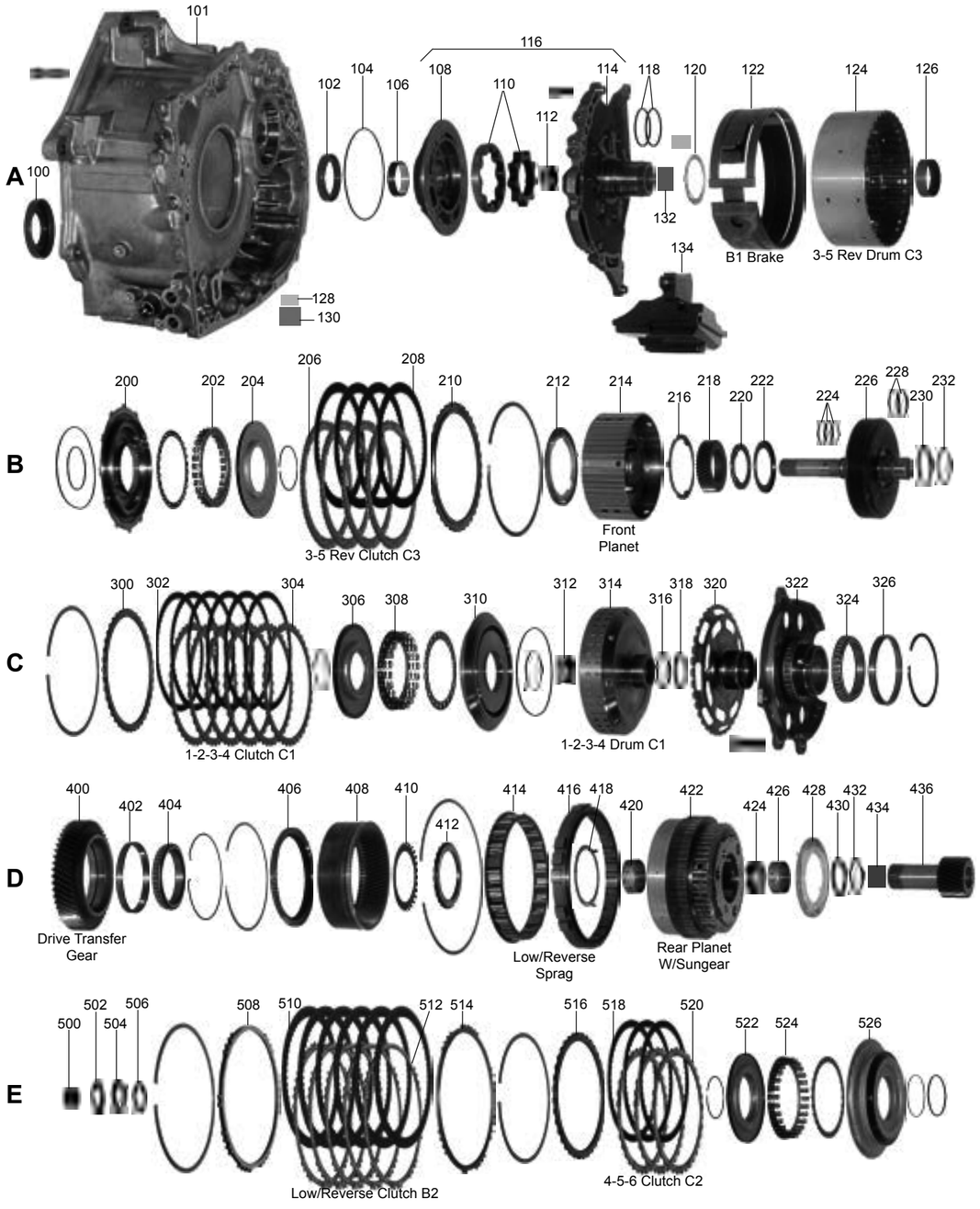
A
B
C
D
E
100
101
102
104
106
108
110
112
114
116
118
120
122
124
126
128
130
132
134
B1 Brake
3-5 Rev Drum C3
200
202
204
206
208
210
212
214
216
218
220
222
224
226
228
230
232
3-5 Rev Clutch C3
Front Planet
300
302
304
306
308
310
312
314
316
318
320
322
324
326
1-2-3-4 Clutch C1
1-2-3-4 Drum C1
400
402
404
406
408
410
412
414
416
418
420
422
424
426
428
430
432
434
436
Drive Transfer Gear
Low/Reverse Sprag
Rear Planet W/Sungear
500
502
504
506
508
510
512
514
516
518
520
522
524
526
Low/Reverse Clutch B2
4-5-6 Clutch C2

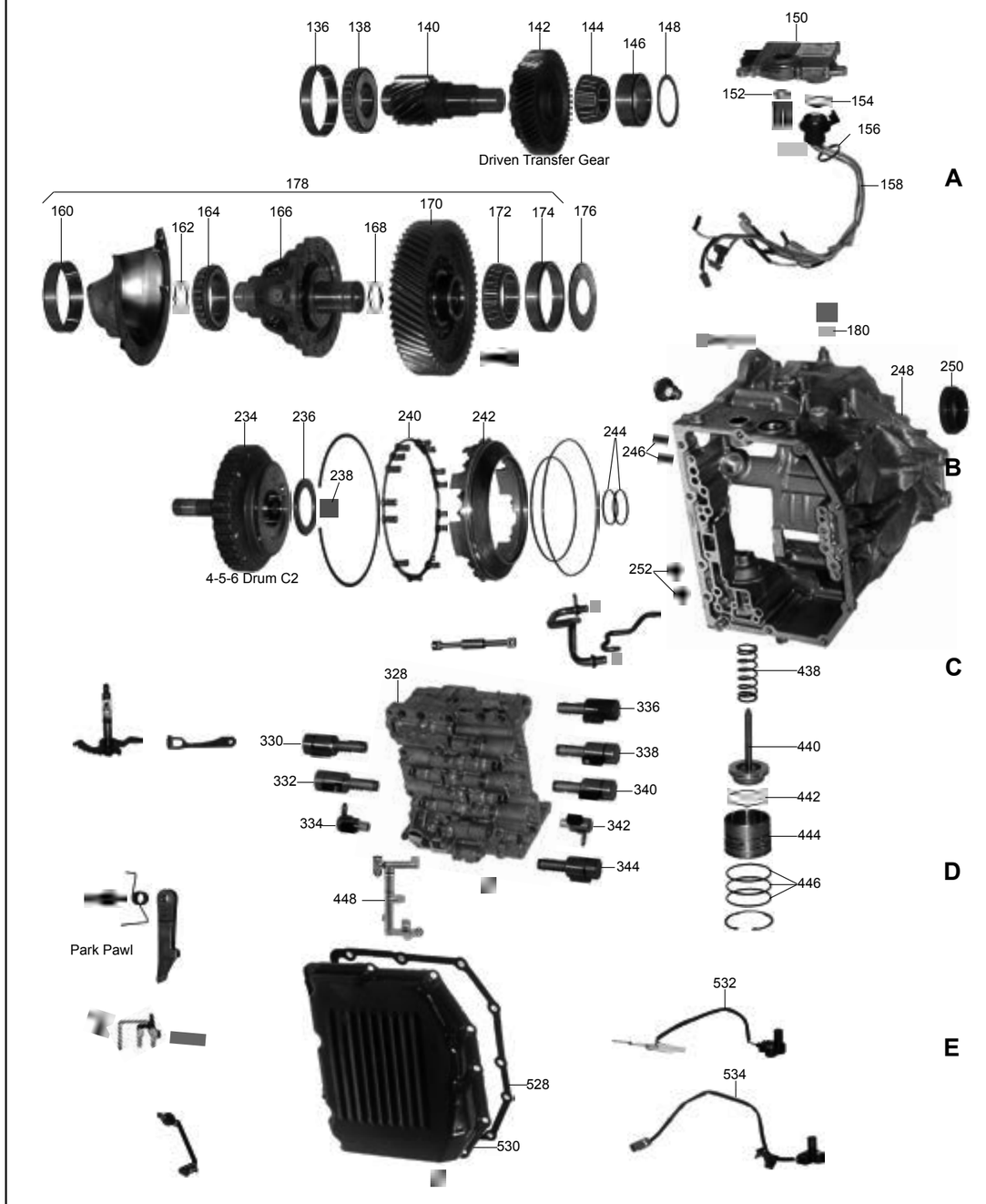
A
B
C
D
E
136
138
140
142
144
146
148
Driven Transfer Gear
150
152
154
156
158
160
162
164
166
168
170
172
174
176
178
180
234
236
238
240
242
244
246
248
250
4-5-6 Drum C2
252
328
330
332
334
336
338
340
342
344
438
440
442
444
446
448
Park Pawl
528
530
532
534

ILL.		Qty.	Year	Part #	Ref. #
MASTER OVERHAUL KITS (WITH STEELS)					
N.I.	TF-81SC (AF21, AW6A-EL) (Ford, Mazda)	1	05-Up	255006	N.L.
N.I.	TF-80SC (AF40) (Saab, Opel)	1	05-Up	255006A	N.L.
N.I.	TF-80SC (AF40) (Volvo)	1	05-Up	255006B	N.L.
MASTER OVERHAUL KITS (LESS STEELS)					
N.I.	TF-81SC (AF21, AW6A-EL) (Ford, Mazda)	1	05-Up	255004	N.L.
N.I.	TF-80SC (AF40) (Saab, Opel)	1	05-Up	255004A	N.L.
N.I.	TF-80SC (AF40) (Volvo)	1	05-Up	255004B	N.L.
OVERHAUL KITS (WITH RINGS AND SEALS)					
N.I.	TF-81SC (AF21, AW6A-EL) (Ford, Mazda)	1	05-Up	255002	N.L.
N.I.	TF-80SC (AF40) (Saab, Opel)	1	05-Up	255002A	N.L.
N.I.	TF-80SC (AF40) (Volvo)	1	05-Up	255002B	N.L.
BONDED PISTONS					
N.I.	Piston Kit (Bonded)	1	05-Up	255960K	N.L.
204B	Piston, C3 Balance (Bonded)	1	05-Up	255982	N.L.
306C	Piston, C1 Balance (Bonded)	1	05-Up	255984	N.L.
522E	Piston, C2 Balance (Bonded)	1	05-Up	255985	N.L.
526E	Piston, C2 Clutch (Bonded)	1	05-Up	255965	N.L.
GASKETS & O-RINGS					
104A	Pump O-Ring	1	06-Up	255311	N.L.
528E	Cover Gasket, AF21 (TF-81SC)	1	05-Up	255300	N.L.
528E	Cover Gasket, AF40 (TF-80SC)	1	06-Up	255300A	N.L.
METAL CLAD SEALS					
100A	Axle, Right (Five Hundred, Montego)	1	05-Up	255076	N.L.
100A	Axle, Right (Fusion, Milan, MKZ, Zephyr, Mazda)	1	05-Up	255076A	N.L.
100A	Axle, Right (Saab, Opel)	1	05-Up	255076B	N.L.
102A	Converter	1	05-Up	255070	N.L.
152A	Manual Shaft	1	05-Up	255072	N.L.
250B	Axle, Left (Five Hundred, Montego)	1	05-Up	255077	N.L.
250B	Axle, Left (Fusion, Milan, MKZ, Zephyr, Mazda)	1	05-Up	255077A	N.L.
250B	Axle, Left (Saab, Opel)	1	05-Up	255077B	N.L.
SEALING RINGS & KITS					
N.I.	Sealing Ring Kit	1	05-Up	255175K	N.L.
FRICTION PLATES					
208B	3-5 Reverse (C3)	4-5	05-Up	255104	N.L.
302C	4-5-6 (C2)	3-4	05-Up	255106	N.L.
510E	1-2-3-4 (C1)	6-7	05-Up	255108	N.L.
518E	Low/Reverse (B2)	6-7	05-Up	255114	N.L.
STEEL PLATES					
206B	3-5 Reverse (C3)	4-5	05-Up	255124	N.L.
304C	4-5-6 (C2)	3-4	05-Up	255126	N.L.
512E	1-2-3-4 (C1)	6-7	05-Up	255128	N.L.
520E	Low/Reverse (B2)	5-6	05-Up	255134	N.L.
PRESSURE PLATES					
210B	3-5-Reverse (C3) (.120", 54T)	1	05-Up	255144	N.L.
300C	1-2-3-4 (C1) (.065", 36T)	1	05-Up	255148	N.L.
508E	Low/ Reverse (Top) (B2) (.205", 14T)	1	05-Up	255154	N.L.
514E	Low/ Reverse (Bottom) (B2) (.140", 14T)	1	05-Up	255155	N.L.
516E	4-5-6 (C2) (.120", 36T)	1	05-Up	255146	N.L.
FILTERS					
134A	Main	1	05-Up	255010	N.L.
BANDS					
122A	B-1 (2-6)	1	05-Up	255024	N.L.

ILL.		Qty.	Year	Part #	Ref. #
BUSHINGS					
N.I.	Bushing Kit	1	05-Up	255030	N.L.
106A	Pump	1	05-Up	255034	N.L.
112A	Stator	1	05-Up	255036	N.L.
420D	Rear Planet (Front)	1	05-Up	255053A	N.L.
424D	Rear Planet (Rear)	1	05-Up	255053B	N.L.
434D	Sun Gear	2	05-Up	255052	N.L.
THRUST WASHERS/BEARINGS					
WASHERS					
N.I.	Thrust Washer Kit	1	05-Up	255200	N.L.
120A	Stator	1	05-Up	255211	N.L.
212B	Front Planet (Front)	1	05-Up	255238	N.L.
216B	Front Planet (Rear)	1	05-Up	255239	N.L.
418D	Rear Planet (Front)	1	05-Up	255251	N.L.
428D	Rear Planet (Rear)	1	05-Up	255252	N.L.
BEARINGS					
N.I.	Bearing Kit	1	05-Up	255201	N.L.
138A	Transfer Gear Bearing & Race (Large)	1	05-Up	255279	N.L.
144A	Transfer Gear Bearing & Race (Small)	1	05-Up	255281	N.L.
164A	Differential Bearing & Race (Large)	1	05-Up	255292	N.L.
172A	Differential Bearing & Race (Small)	1	05-Up	255289	N.L.
220B	Front Ring Gear (Front)	1	05-Up	255223	N.L.
230B	Front Ring Gear (Rear)	1	05-Up	255224	N.L.
236B	C2 Drum (Rear)	1	05-Up	255229	N.L.
316C	C1 Drum (Rear)	1	05-Up	255232	N.L.
324C	Output Gear Bearing & Race	2	05-Up	255283	N.L.
ELECTRICAL COMPONENTS					
150A	Switch, MLPS w/ TCM	1	05-Up	255410	N.L.
158A	Wire Harness, Internal	1	05-Up	255445	N.L.
334C	Solenoid, Shift w/ Bracket	2	05-Up	255421	N.L.
532E	Sensor, Input Speed (ISS)	1	05-Up	255438	N.L.
534E	Sensor, Output Speed (OSS)	1	05-Up	255436	N.L.
N.I.	Solenoid, Linear w/ Black Connector (w/ Stripe)	2	05-Up	255420	N.L.
N.I.	Solenoid, Linear w/ Grey Connector (w/o Stripe)	1	05-Up	255425	N.L.
N.I.	Solenoid, Linear w/ Grey Connector (w/ Stripe)	2	05-Up	255428	N.L.
N.I.	Solenoid, Linear w/ Brown Connector	1	05-Up	255432	N.L.
VALVE BODY RECALIBRATION KITS					
N.I.	Shift Kit®, AWF21 (TF-81SC) (Transgo®)	1	05-06	T255165	SK® AWF21
PUMPS					
108A	Pump Body w/ Gears	1	05-Up	255510	N.L.
116A	Pump	1	05-Up	255500	N.L.
PUMP COMPONENTS					
110A	Pump Gears	1	05-Up	255530	N.L.
114A	Stator	1	05-Up	255520	N.L.
DRUMS & COMPONENTS					
124A	Drum, C3 (3-5/Rev)	1	05-Up	255552	N.L.
200B	Piston, C3	1	05-Up	255962	N.L.
202B	Return Spring, C3	1	05-Up	255972	N.L.
204B	Piston, C3 Balance (Bonded)	1	05-Up	255982	N.L.
234B	Drum, C2 (4-5-6)	1	05-Up	255556	N.L.
240B	Return Spring, B2	1	05-Up	255977	N.L.
242B	Piston, B2	1	05-Up	255967	N.L.
306C	Piston, C1 Balance (Bonded)	1	05-Up	255984	N.L.
308C	Return Spring, C1	1	05-Up	255974	N.L.
310C	Piston, C1	1	05-Up	255964	N.L.
314C	Drum, C1 (1-2-3-4)	1	05-Up	255554	N.L.
326C	Piston, C2 Clutch (Bonded)	1	05-Up	255965	N.L.
522E	Piston, C2 Balance (Bonded)	1	05-Up	255985	N.L.
524E	Return Spring, C2	1	05-Up	255975	N.L.

ILL.		Qty.	Year	Part #	Ref. #
PLANETS & COMPONENTS					
214B	Planet, Front	1	05-Up	255582	35720TFE030
226B	Ring Gear, Front (w/ Shaft)	1	05-Up	255592	N.L.
408D	Ring Gear, Rear	1	05-Up	255594	N.L.
422D	Planet, Rear	1	05-Up	255584	35760TFE050
N.I.	Ring Gear Flange	1	05-Up	255596	N.L.
SUN GEARS					
218B	Sun Gear, Front (45T)	1	05-Up	255612	N.L.
320C	Drive Flange	1	05-Up	255624	N.L.
436D	Sun Gear, Rear (27T)	1	05-Up	255614	35707TFE010
ONE WAY CLUTCHES					
414D	Low Roller Clutch	1	05-Up	255652	N.L.
418D	Roller Clutch Assembly w/ Race	1	05-Up	255642	N.L.
VALVE BODIES & GOVERNORS					
328D	Valve Body (AF21) (Ford)	1	05-Up	255740-1	N.L.
328D	Valve Body (AF40) (Volvo)	1	05-Up	255740-2	N.L.
DIFFERENTIALS					
140A	Ring & Pinion	1	05-Up	255730K	N.L.
142A	Transfer Gear w/ Pinion	1	05-Up	255712	N.L.
178A	Differential (12 Bolt)	1	05-Up	255715B	41310TFE320
178A	Differential (16 Bolt)	1	05-Up	255715	41310TFE250
322C	Drive Gear Support	1	05-Up	255713	N.L.
400D	Drive Gear	1	05-Up	255710	N.L.
CASES/HOUSINGS & COMPONENTS					
101A	Bell Housing	1	05-Up	255750	N.L.
248B	Case	1	05-Up	255760	N.L.
530E	Cover (Ford)	1	05-Up	255766	N.L.
MISCELLANEOUS COMPONENTS					
410D	Drive Support Lock	1	05-Up	255907	N.L.
412D	Drive Support Nut	1	05-Up	255795	N.L.
SERVOS & ACCUMULATORS					
440D	Servo	1	05-Up	255910	N.L.
N.I.	Piston Kit (Accumulator)	1	05-Up	255927K	N.L.
TECHNICAL MANUALS					
N.I.	AF21, AF40	1	05-Up	255400	N.L.

Notes

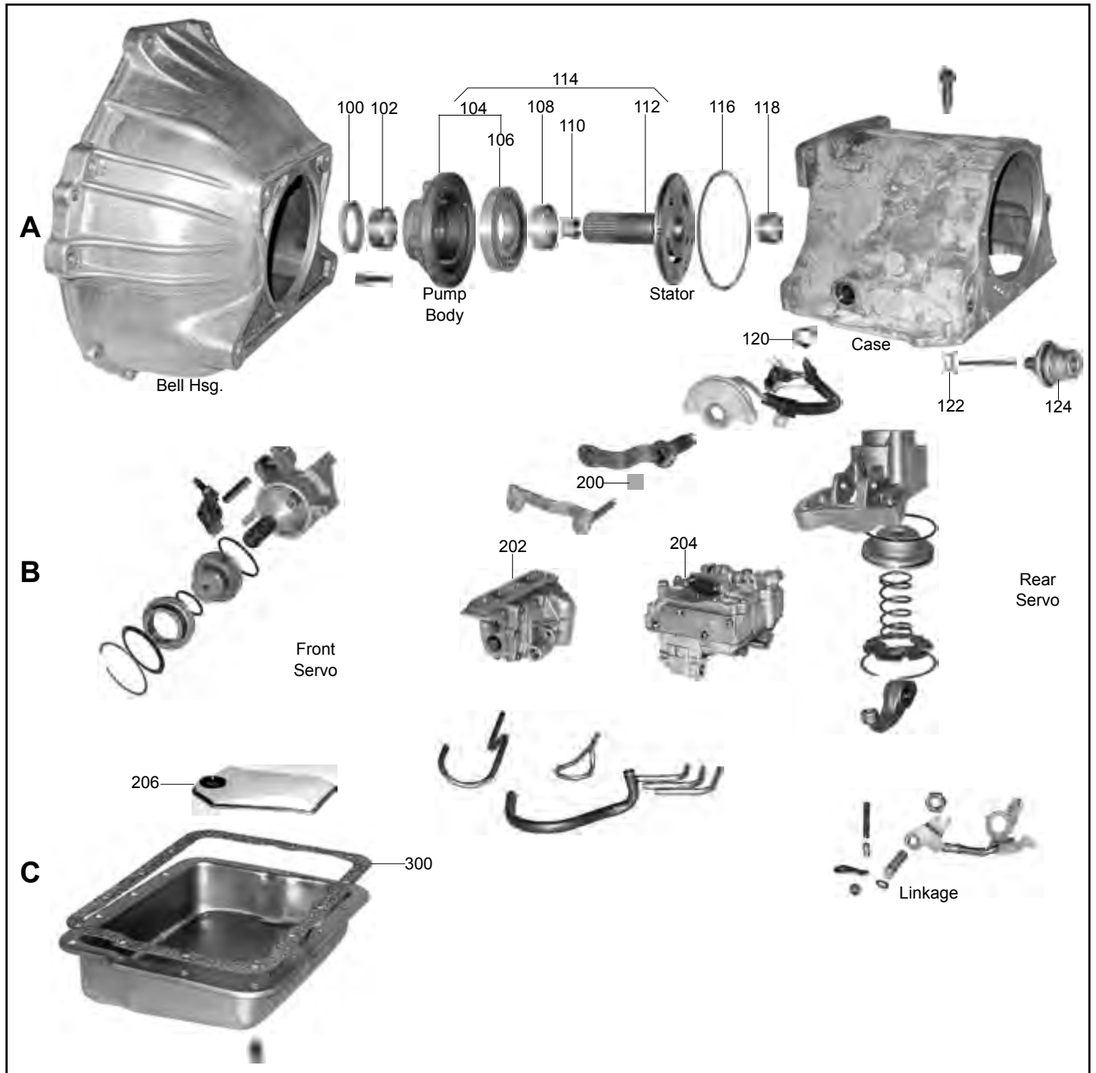
A
100
102
104
106
108
110
112
114
116
118
Bell Hsg.
Pump Body
Stator
Case
120
122
124
B
200
202
204
Front Servo
Rear Servo
206
C
300
Linkage

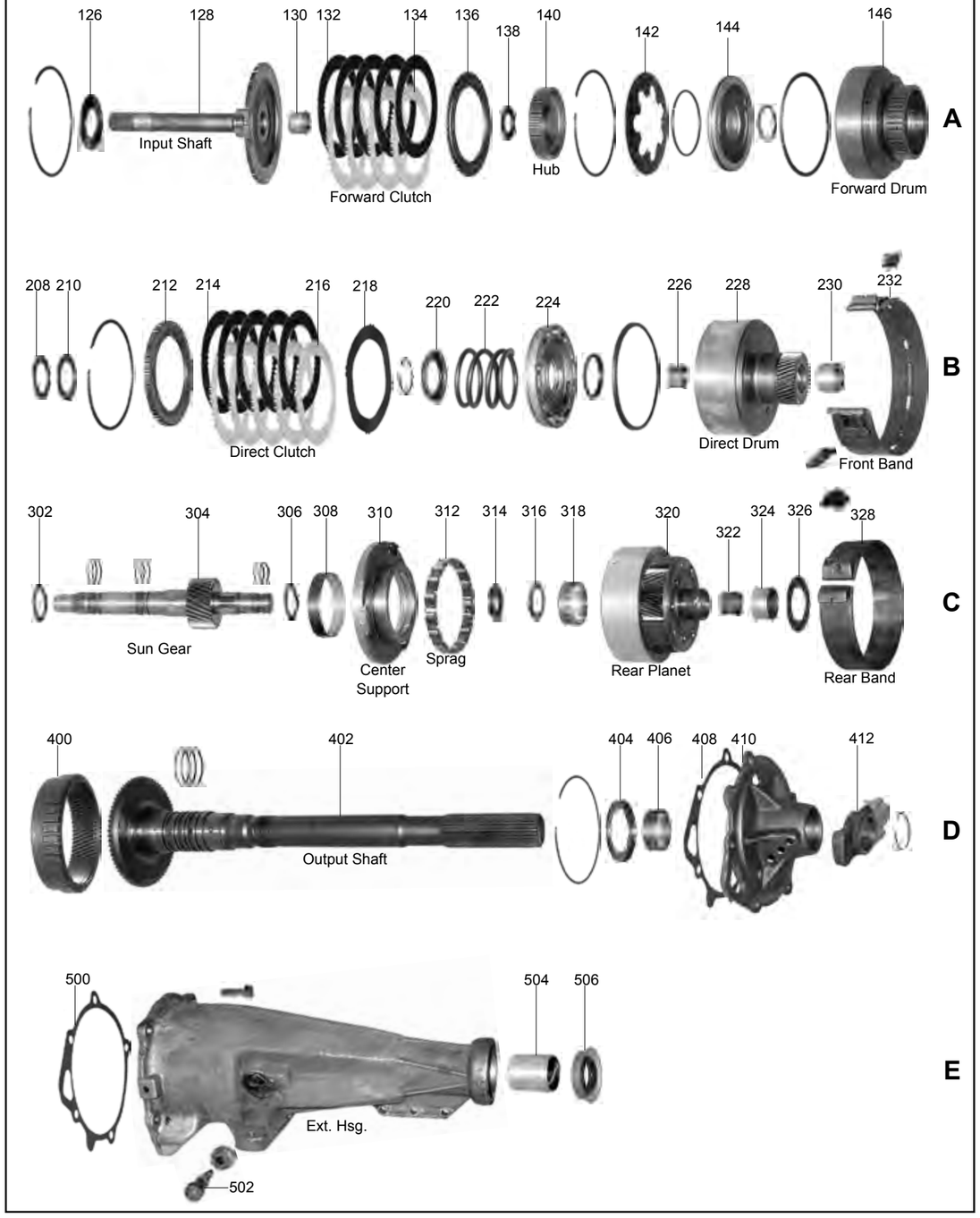
126
128
130
132
134
136
138
140
142
144
146
Input Shaft
Forward Clutch
Hub
Forward Drum
A
208
210
212
214
216
218
220
222
224
226
228
230
232
Direct Clutch
Direct Drum
Front Band
B
302
304
306
308
310
312
314
316
318
320
322
324
326
328
Sun Gear
Center Support
Sprag
Rear Planet
Rear Band
C
400
402
404
406
408
410
412
Output Shaft
D
500
502
504
506
Ext. Hsg.
E

ILL.		Qty.	Year	Part #	Ref. #
MASTER OVERHAUL KITS (WITH STEELS)					
N.I.	FMX	1	68-81	106006	N.L.
N.I.	Small Case	1	51-67	106006B	N.L.
N.I.	Medium Case	1	55-66	106006C	N.L.
N.I.	Medium Case	1	67-72	106006CA	N.L.
MASTER OVERHAUL KITS (LESS STEELS)					
N.I.	FMX	1	68-81	106004	N.L.
N.I.	Small Case	1	51-67	106004B	N.L.
N.I.	Medium Case	1	55-66	106004C	N.L.
N.I.	Medium Case	1	67-72	106004CA	N.L.
OVERHAUL KITS (WITH RINGS AND SEALS)					
N.I.	FMX	1	68-81	106002	N.L.
N.I.	Small Case	1	51-67	106002B	N.L.
N.I.	Medium Case	1	55-72	106002C	N.L.
METAL CLAD SEALS					
100A	Front Pump	1	68-81	36070	C2AZ-7A248A
506E	Rear (also fits C-4 w/o Boot)	1	68-81	44074	D5AZ-7052A
506E	Rear (also fits C-6 w/o Boot)	1	68-81	36074	C3AZ-7052A
FRICTION PLATES					
132A	Forward (Front) (.061")	AR	68-81	106108A	D0AP-7E311D
132A	Forward (Front) (.073")	AR	68-81	106108C	C9AZ-7B164C
132A	Forward (Front) (.088")	AR	68-81	106108B	C9AZ-78164B
214B	Direct (Rear) (.079")	3-4	68-81	106106A	C9ZP-7B164A
STEEL PLATES					
134A	Forward (Front) (Flat)	3-4	68-81	76128	C8AZ-7B442A
216B	Direct (Rear) (.092") (Flat)	AR	68-81	106128A	C2AZ-7B442A
FILTERS					
206B	FMX (Felt)	1	68-81	106010	D8AZ-7A098A
206B	FMX (Brass)	1	68-81	106010A	D1AZ-7A098A
206B	Small Case	1	50-67	106010B	B9AP-7A098B
206B	Medium Case	1	55-72	106010C	B9MP-7A098B
BANDS					
232B	Front (Flex) (FMX)	1	68-81	106022	D7AZ-7A162A
328C	Rear (incl FMX)	1	68-81	106024	B5SZ-7A163B
BUSHINGS					
N.I.	Bushing Kit (FMX)	1	68-81	106030	N.L.
102A	Pump Body	1	68-81	36034	E0AZ-7B258B
110A	Stator	1	68-81	106036	N.L.
118A	Case	1	68-81	106064	3202299
130A	Input Shaft	1	68-81	106047	B1A-7120A
230B	Direct Drum	1	68-81	106046	B1AZ-7B262A
318C	Planet (Inner)	1	68-81	106058	B1AZ-7B257B
322C	Planet (Outer)	1	68-81	106058B	B5AZ-7B256A
406D	Rear Pump	1	68-81	106034B	3154216
504E	Extension Housing	1	68-81	36066	B5AZ-7A034A

ILL.		Qty.	Year	Part #	Ref. #
MISCELLANEOUS COMPONENTS					
106A	Pump Gears	1	68-81	36530	C6AP-7C010B
114A	Pump	1	68-81	106500	C8AZ-7A103A
116A	O-Ring, Front Pump	1	68-81	106311	3151009
124A	Modulator, Blue Stripe (Single Line)	1	68-81	206160	C1AZ-7A377B
124A	Modulator, Green Stripe (Single Line)	1	68-81	106160	D5AZ-7A377C
142A	Spring, Front Clutch Spring	1	68-81	106974	C1AP-7B070A
146A	Forward (Front Clutch)	1	68-81	106554	D2AZ-7A360C
300C	Gasket, Bottom Pan (Small Case/FMX)	1	68-81	106300	3151074
300C	Gasket, Bottom Pan (Medium Case)	1	51-81	106300C	N.L.
312C	Sprag, Low Roller Clutch (Rear)	1	68-81	34654	7471002
N.I.	Hose, Modulator (Elbow)	1	68-81	44162	C1AZ-7B087E
N.I.	Shift Kit®, FMX 1973-81 (Transgo®)	1	68-81	T106165A	SK® 3 73
N.I.	Reprogramming Kit™, FMX Competition Stick Shift (Transgo®)	1	68-81	T106173	FMX-3
N.I.	Spring, Governor Return Spring	1	68-81	106681A-3	N.L.

Notes

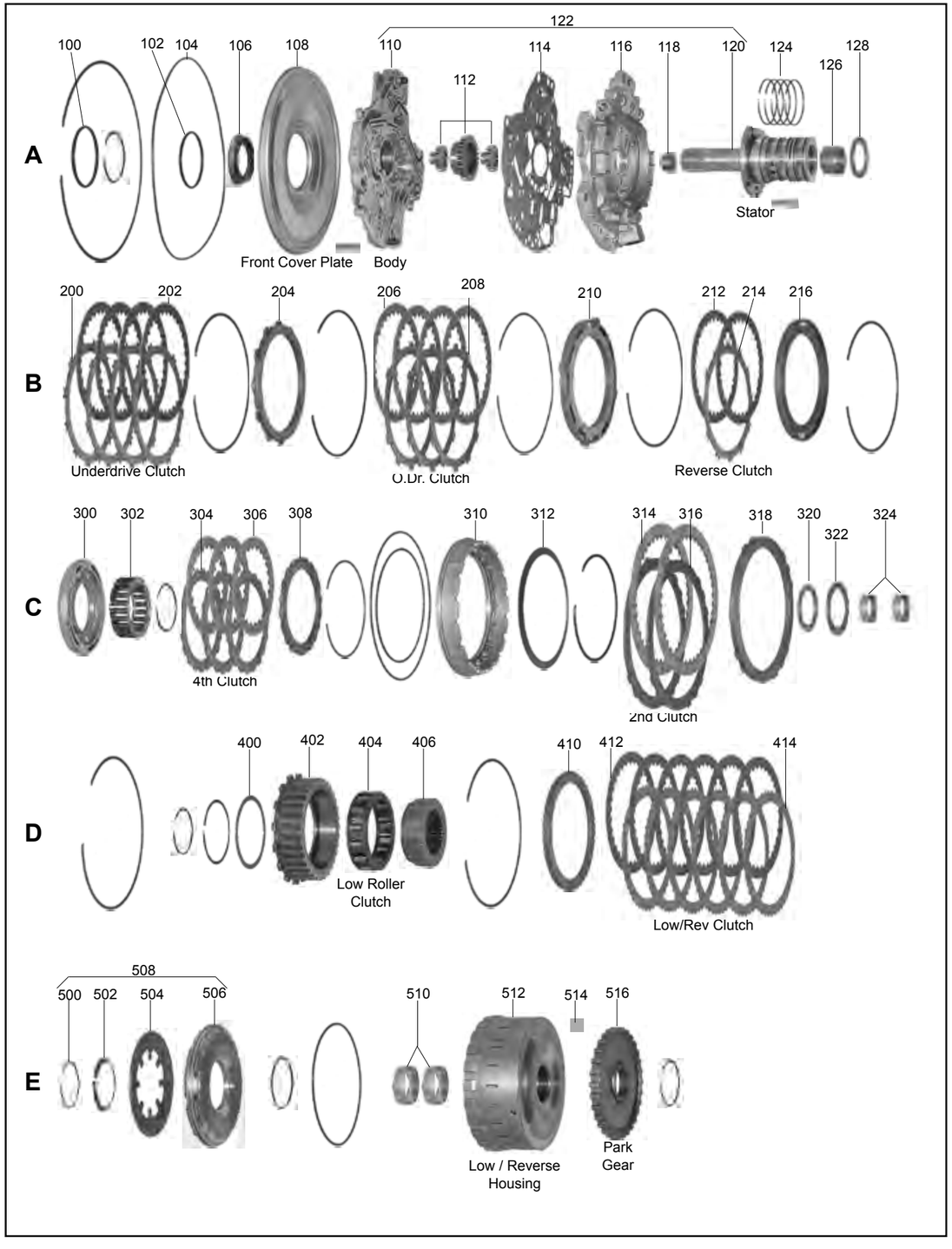
A
100
102
104
106
108
110
112
114
116
118
120
122
124
126
128
Front Cover Plate
Body
Stator
B
200
202
204
206
208
210
212
214
216
Underdrive Clutch
O.Dr. Clutch
Reverse Clutch
C
300
302
304
306
308
310
312
314
316
318
320
322
324
4th Clutch
2nd Clutch
D
400
402
404
406
410
412
414
Low Roller Clutch
Low/Rev Clutch
E
500
502
504
506
508
510
512
514
516
Low / Reverse Housing
Park Gear

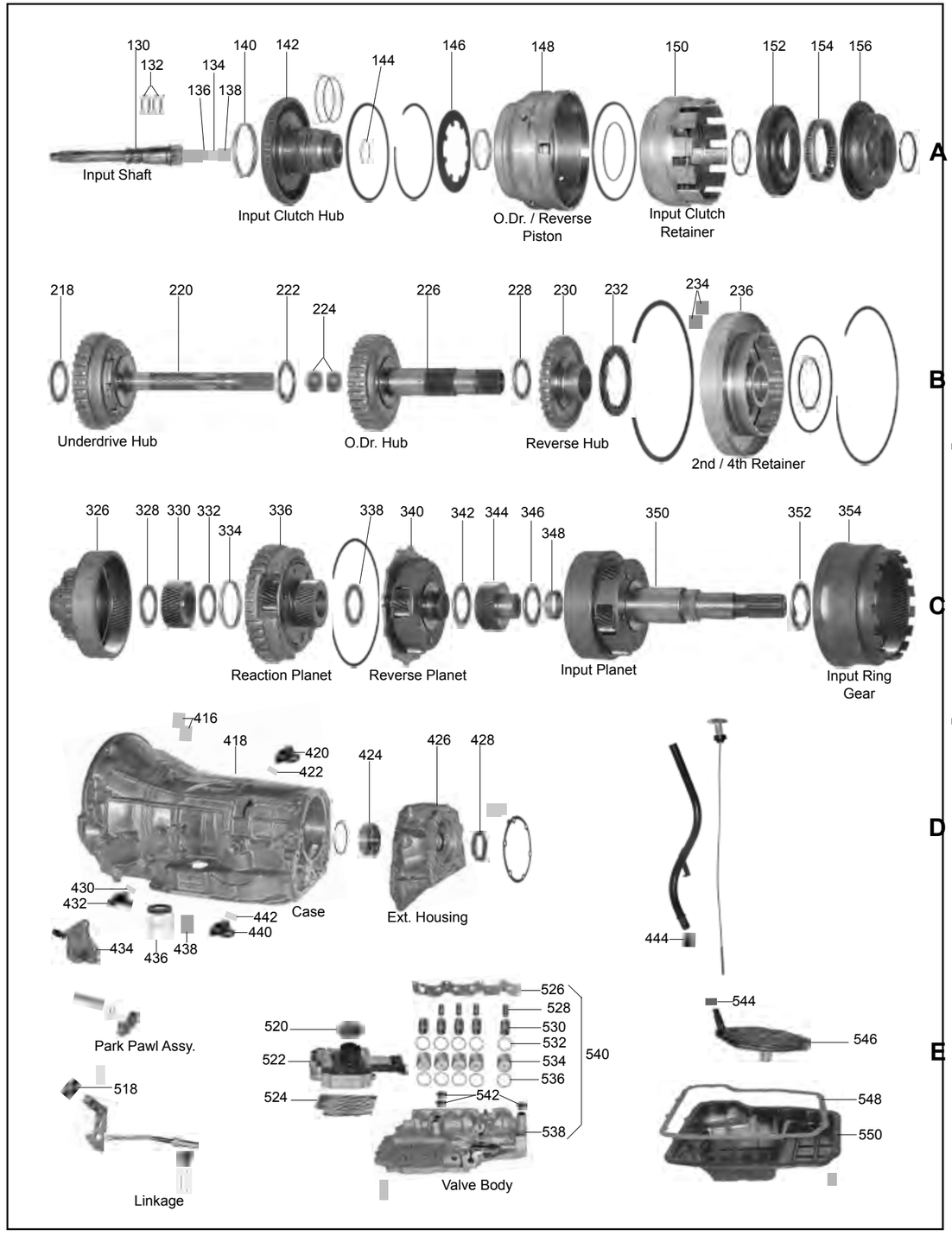
A
130
132
134
136
138
140
142
144
146
148
150
152
154
156
Input Shaft
Input Clutch Hub
O.Dr. / Reverse Piston
Input Clutch Retainer
B
218
220
222
224
226
228
230
232
234
236
Underdrive Hub
O.Dr. Hub
Reverse Hub
2nd / 4th Retainer
C
326
328
330
332
334
336
338
340
342
344
346
348
350
352
354
Reaction Planet
Reverse Planet
Input Planet
Input Ring Gear
D
416
418
420
422
424
426
428
430
432
434
436
438
440
442
444
Case
Ext. Housing
E
Park Pawl Assy.
518
520
522
524
526
528
530
532
534
536
538
540
542
544
546
548
550
Linkage
Valve Body

ILL.		Qty.	Year	Part #	Ref. #
DELUXE KITS (SUPER KITS WITH STEELS)					
N.I.	45RFE, 5-45RFE (w/ Underdrive Pistons)	1	99-05	72008	N.L.
N.I.	45RFE, 5-45RFE (w/ Pistons)	1	06-Up	72008B	N.L.
N.I.	68RFE (w/ Pistons)	1	07-Up	72008C	N.L.
MASTER OVERHAUL KITS (WITH STEELS)					
N.I.	45RFE, 5-45RFE (w/ Underdrive Pistons)	1	99-05	72006	N.L.
N.I.	45RFE, 5-45RFE (w/ Pistons)	1	06-Up	72006B	N.L.
N.I.	68RFE (w/ Pistons)	1	07-Up	72006C	N.L.
MASTER OVERHAUL KITS (LESS STEELS)					
N.I.	45RFE, 5-45RFE (w/ Underdrive Pistons)	1	99-05	72004	N.L.
N.I.	45RFE, 5-45RFE (w/ Pistons)	1	06-Up	72004B	N.L.
N.I.	68RFE (w/ Pistons)	1	07-Up	72004C	N.L.
OVERHAUL KITS (WITH RINGS AND SEALS)					
N.I.	45RFE, 5-45RFE (w/o Pistons)	1	99-05	72002A	N.L.
N.I.	45RFE, 5-45RFE (w/o Pistons)	1	06-Up	72002B	N.L.
N.I.	68RFE (w/o Pistons)	1	07-Up	72002C	N.L.
BONDED PISTONS					
N.I.	Piston Kit	1	99-Up	72960K	N.L.
152A	Piston, Underdrive (Bonded) (All)	1	99-Up	72964	4799650
156A	Retainer, Underdrive (Bonded) (All)	1	99-Up	72964A	4799652
300C	Piston, 4th Clutch (Bonded)	1	06-Up	72968A	49575359
310C	Piston, 2nd Clutch (Bonded) (45RFE)	1	99-Up	72962A	52119503AA
310C	Piston, 2nd Clutch (Bonded) (68RFE)	1	07-Up	72962C	52119655AA
506E	Piston, Low/ Reverse (Bonded) (All)	1	99-Up	72967A	5179008AA
GASKETS & O-RINGS					
100A	O-Ring, Converter Hub	1	99-Up	72381	N.L.
102A	Seal, Pump Cover (Inner) (45RFE)	1	99-06	72311A	N.L.
104A	Seal, Pump Cover (Outer) (All)	1	99-Up	72311	N.L.
444D	Seal, Filler Tube	1	99-Up	72371	4810021AB
542E	Seal, Valve Body to Case (All)	3	99-Up	72342	N.L.
544E	Seal, Filter to Oil Pump (All)	1	99-Up	72379A	4799964AB
548E	Gasket, Pan (Fiber) (All)	1	99-Up	72300	N.L.
METAL CLAD SEALS					
106A	Front (Flanged) (Replaces Non Flanged)	1	99-Up	72070	4617919
428D	Rear (45RFE)	1	99-Up	36074B	C1DP-7052A
428D	Rear (68RFE)	1	07-Up	72074B	N.L.
428D	Adapter (4wd)	1	99-Up	72074	4167929
518E	Shift Lever	1	99-Up	72072	N.L.
SEALING RINGS & KITS					
N.I.	Sealing Ring Kit (All)	1	99-Up	72175K	N.L.
FRICTION PLATES					
200B	Underdrive (68RFE) (.059") (Single Sided External Teeth)	5	07-Up	72122C	N.L.
202B	Underdrive (45RFE) (.076")	2-6	99-Up	72102A	4799106
202B	Underdrive (68RFE) (.059") (Single Sided Internal Teeth)	5	07-Up	72102C	N.L.
206B	Overdrive (45RFE) (.091")	4	99-Up	72100A	4799114
206B	Overdrive (68RFE) (.049") (Single Sided Internal Teeth)	6	07-Up	72100C	N.L.
208B	Overdrive (68RFE) (.049") (Single Sided External Teeth)	6	07-Up	72120C	N.L.
212B	Reverse Input (All)	2	99-Up	72102A	4799106
306C	4th Clutch (All)	3	99-Up	72101A	4799530
314C	2nd Clutch (All)	2-3	99-Up	72104A	4799244
412D	Low/ Reverse (45RFE)	6	99-Up	72114A	4799461AB
412D	Low/ Reverse (Single Sided Internal Teeth) (68RFE)	7	07-Up	72114C	N.L.
414D	Low/ Reverse (Single Sided External Teeth) (68RFE)	7	07-Up	72134C	N.L.

ILL.		Qty.	Year	Part #	Ref. #
STEEL PLATES					
200B	Underdrive (45RFE)	4-5	99-Up	72122A	4799105AB
208B	Overdrive (45RFE) (.086")	3	99-Up	72120A	4799398AB
214B	Reverse Input (All)	1	99-Up	72122A	4799105AB
304C	4th Clutch (All)	3	99-Up	72121A	4799529
316C	2nd Clutch (All)	2-3	99-Up	72124A	4799243
414D	Low/ Reverse (45RFE)	6	99-Up	72134A	4799460
N.I.	Steel Module (45RFE)	1	99-Up	72139	N.L.
PRESSURE PLATES					
204B	Underdrive (45RFE)	1	99-06	72142	4799108AD
204B	Underdrive (45RFE)	1	07-Up	72142A	N.L.
204B	Underdrive (68RFE)	1	07-Up	72142B	N.L.
210B	Overdrive (45RFE)	1	99-Up	72140	N.L.
210B	Overdrive (68RFE)	1	07-Up	72140C	N.L.
216B	Reverse (All)	1	99-Up	72150	N.L.
308C	4th Clutch (All)	1	99-Up	72141	N.L.
318C	2nd Clutch (All)	1	99-Up	72144	N.L.
410D	Low/ Reverse (45RFE)	1	99-Up	72154	4799667
410D	Low/ Reverse (68RFE)	1	07-Up	72154C	N.L.
FILTERS					
436D	Cooler Return, Spin on Type	1	99-Up	72013A	4799662
524E	Solenoid Screen (Used w/ Black Connector Solenoid) (45RFE)	1	99-03	72016	N.L.
524E	Solenoid Screen (Used w/ White Connector Solenoid) (All)	1	04-Up	72016A	N.L.
546E	Filter, 2wd	1	99-09	72010A	4800029AA
546E	Filter, 2wd	1	10-Up	72010B	4799507
546E	Filter, 4wd	1	99-Up	72010B	4799507
FILTER KITS					
N.I.	Filter Kit, 2wd	1	99-09	72011AF	N.L.
N.I.	Filter Kit, 2wd	1	10-Up	72011BF	N.L.
N.I.	Filter Kit, 4wd	1	99-Up	72011BF	N.L.
BUSHINGS					
N.I.	Bushing Kit (45RFE)	1	99-Up	72030	N.L.
N.I.	Bushing Kit (68RFE)	1	99-Up	72030B	N.L.
118A	Reaction Support (Front) (45RFE)	1	99-Up	72036	4799656
126A	Reaction Support (Rear) (45RFE)	1	99-Up	72037	4799583
138A	Input Shaft (45RFE)	1	99-Up	72047	4799544
140A	Input Clutch Hub (45RFE)	1	99-Up	72055	4799644
224B	Overdrive Shaft (Front) (45RFE)	1	99-Up	72041	4799552
224B	Overdrive Shaft (Rear) (45RFE)	1	99-Up	72041A	4799132
324C	Front Ring Gear (45RFE)	2	99-Up	72050	4799560
334C	Reaction Carrier / Sun Gear (45RFE)	1	99-Up	72053	4799622
348C	Output Shaft (45RFE)	1	99-Up	72058	4799510
510E	Low/ Reverse Retainer (Front) (45RFE)	1	99-Up	72061	4799657
510E	Low/ Reverse Retainer (Rear) (45RFE)	1	99-Up	72061A	4799658
N.I.	Extension Housing (2wd) (45RFE)	1	99-Up	36066	B5AZ-7A034A
THRUST WASHERS/BEARINGS					
BEARINGS					
N.I.	Bearing Kit (45RFE)	1	99-Up	72201K	N.L.
N.I.	Bearing Kit (68RFE)	1	07-Up	72201BK	N.L.
ELECTRICAL COMPONENTS					
420D	Sensor, Input Speed (TSS) (All)	1	99-Up	72436	4799061AB
440D	Sensor, Output Speed (VSS) (All)	1	99-Up	72436	4799061AB
522E	Solenoid Block (incl EPC) (White Connector Upgrade & Plate) (45RFE)	1	99-03	72420	4799937AD
522E	Solenoid Block (incl EPC) (White Connector) (45RFE, 68RFE)	1	04-Up	72420A	5170877AA
N.I.	Sensor, Line Pressure	1	99-Up	72415	4799758
N.I.	Solenoid Bracket (TRS Cam Plate) (All)	1	04-Up	72448	4799654AC
VALVE BODY RECALIBRATION KITS					
N.I.	Shift Kit®, 45RFE, 5-45RFE, 68RFE (Transgo®)	1	99-Up	T72165	SK® 45RFE
N.I.	Reprogramming Kit TM, 45RFE, 5-45RFE, 68RFE (Transgo®)	1	99-Up	T72169	45RFE-HD2

ILL.		Qty.	Year	Part #	Ref. #
PUMPS					
122A	Pump (45RFE) (with seal design)	1	99-Up	72500	5072589AC
122A	Pump (45RFE) (2nd design)	1	07-Up	72500A	68009879AB
122A	Pump (68RFE) (2nd design)	1	07-Up	72500C	68029305AA
PUMP COMPONENTS					
N.I.	Valve, Anti Drain Input (45RFE)	1	99-Up	72507	4799974AA
108A	Pump Cover Plate (Aluminum) (45RFE) (1st design)	1	99-06	72519	4799609
108A	Pump Cover Plate (Steel Type) (45RFE) (2nd design)	1	07-Up	72519A	68009859AA
108A	Pump Cover Plate (Steel Type) (68RFE)	1	07-Up	72519C	52119645AA
112A	Pump Gears (3 Piece) (2 Lug) (45RFE)	1	99-Up	72530	N.L.
112A	Pump Gears (3 Piece) (4 Lug) (68RFE)	1	07-Up	72530B	N.L.
DRUMS & COMPONENTS					
142A	Clutch Hub, Input	1	99-Up	72574	4799536AC
146A	Belleville Spring, Overdrive Piston Return (45RFE)	1	99-Up	72971	N.L.
146A	Belleville Spring, Overdrive Piston Return (68RFE)	1	07-Up	72971A	N.L.
150A	Retainer, Input Clutch	1	99-06	72554	N.L.
150A	Retainer, Input Clutch	1	07-Up	72554A	N.L.
152A	Piston, Underdrive (Bonded) (All)	1	99-Up	72964	4799650
156A	Retainer, Underdrive (Bonded) (All)	1	99-Up	72964A	4799652
220B	Clutch Hub, Underdrive (10.250" Long) (45RFE)	1	99-Up	72571	N.L.
220B	Clutch Hub, Underdrive (9.875" Long) (68RFE)	1	07-Up	72571B	N.L.
226B	Clutch Hub, Overdrive (7.750" Long) (45RFE)	1	99-Up	72570	N.L.
226B	Clutch Hub, Overdrive (7.250" Long) (68RFE)	1	07-Up	72570B	N.L.
230B	Clutch Hub, Reverse (Stamped Steel) (45RFE)	1	99-Up	72576	N.L.
230B	Clutch Hub, Reverse (Machined Steel) (68RFE)	1	07-Up	72576B	N.L.
236B	Drum, 2-4 Housing (Aluminum Piston) (45RFE)	1	99-07	72558	4799498AC
236B	Drum, 2-4 Housing (Bonded Piston) (68RFE)	1	07-Up	72558B	N.L.
300C	Piston, 4th Clutch (Aluminum)	1	99-06	72968	N.L.
300C	Piston, 4th Clutch (Bonded)	1	06-Up	72968A	49575359
302C	Spring, Piston Retainer, 4th (All)	1	99-Up	72978	4799527AB
310C	Piston, 2nd Clutch (Aluminum) (45RFE)	1	99-Up	72962	N.L.
310C	Piston, 2nd Clutch (Bonded) (45RFE)	1	99-Up	72962A	52119503AA
310C	Piston, 2nd Clutch (Bonded) (68RFE)	1	07-Up	72962C	52119655AA
312C	Spring, Piston Retainer 2nd Clutch (All)	1	99-Up	72852	4799521
504E	Belleville Spring, Low/ Reverse Piston Return (Aluminum Piston) (45RFE)	1	99-Up	72977A	N.L.
504E	Belleville Spring, Low/ Reverse Piston Return (Bonded Piston)	1	99-Up	72977	N.L.
506E	Piston, Low/ Reverse (Aluminum) (45RFE)	1	99-05	72967	N.L.
506E	Piston, Low/ Reverse (Bonded) (All)	1	99-Up	72967A	5179008AA
512E	Drum, Low/ Reverse (45RFE)	1	99-Up	72557	4799635
512E	Drum, Low/ Reverse (68RFE)	1	07-Up	72557B	N.L.
PLANETS & COMPONENTS					
326C	Ring Gear, Reaction (45RFE) (84T)	1	99-Up	72596	N.L.
336C	Planet, Reaction (3 Gear) (45RFE)	1	99-Up	72586	N.L.
336C	Planet, Reaction (6 Gear) (68RFE)	1	07-Up	72586B	N.L.
340C	Planet, Reverse (12 Lugs) (45RFE)	1	99-Up	72584	N.L.
340C	Planet, Reverse (20 Lugs) (68RFE)	1	07-Up	72584B	N.L.
350C	Planet, Input (5 Gear) (4wd) (45RFE)	1	99-Up	72582	N.L.
350C	Planet, Input (6 Gear) (68RFE)	1	07-Up	72582B	N.L.
354C	Ring Gear, Input (16 Lug) (45RFE)	1	99-Up	72592	N.L.
354C	Ring Gear, Input (20 Lug) (68RFE)	1	07-Up	72592B	N.L.
SUN GEARS					
330C	Sun Gear, Reaction (45RFE)	1	99-Up	72616	N.L.
330C	Sun Gear, Reaction w/ Hub (68RFE)	1	07-Up	72616B	N.L.
344C	Sun Gear, Input (42T) (2.010" Long) (45RFE)	1	99-Up	72612A	N.L.
344C	Sun Gear, Input (42T) (2.070" Long) (45RFE)	1	99-Up	72612	N.L.
344C	Sun Gear, Input (39T) (2.290" Long) (68RFE)	1	07-Up	72612B	N.L.
ONE WAY CLUTCHES					
402D	Assembly, Low Roller Clutch w/ Inner & Outer Race (45RFE)	1	99-Up	72642K	N.L.
402D	Assembly, Low Roller Clutch w/ Inner & Outer Race (68RFE)	1	07-Up	72642BK	52119741AA
404D	Low Roller Clutch (14 Rollers) (45RFE)	1	99-Up	72642A	4799465
404D	Low Sprag (36 Elements) (68RFE)	1	07-Up	72642B	N.L.
406D	Inner Race, Low Roller Clutch (45RFE)	1	99-Up	72664	N.L.

ILL.		Qty.	Year	Part #	Ref. #
SHAFTS					
130A	Input Shaft (10.25" Long, 29 Splines) (45RFE)	1	99-Up	72670	N.L.
130A	Input Shaft (11.75" Long, 27 Splines) (68RFE)	1	07-Up	72670B	N.L.
VALVE BODIES & GOVERNORS					
538E	Valve Body (45RFE)	1	99-Up	72740-1	N.L.
538E	Valve Body (68RFE)	1	07-Up	72740-2	N.L.
CASES/HOUSINGS & COMPONENTS					
418D	Case (45RFE)	1	99-Up	72760	N.L.
418D	Case (68RFE)	1	07-Up	72760B	N.L.
426D	Extension Housing, 2wd (45RFE)	1	99-Up	72770	N.L.
426D	Extension Housing, 4wd (45RFE)	1	99-Up	72770B	N.L.
426D	Extension Housing, 4wd (4.100" Long) (68RFE)	1	07-Up	72770A	N.L.
550E	Pan (2wd) (3" Deep)	1	99-Up	72765	N.L.
550E	Pan (4wd) (3.625" Deep)	1	99-Up	72765A	N.L.
MISCELLANEOUS COMPONENTS					
416D	Cooler Line Fittings (Screw in Type) (45RFE)	1	99-Up	72996	N.L.
416D	Cooler Line Fittings (Push in Type) (68RFE)	1	07-Up	72996B	N.L.
516E	Park Gear (.550" Thick) (45RFE)	1	99-Up	72690	N.L.
516E	Park Gear (.670" Thick) (45RFE, 68RFE)	1	99-Up	72690A	N.L.
SERVOS & ACCUMULATORS					
526E	Plate, Accumulator Cover (OE style) (All)	1	99-Up	72929	4799598AB
526E	Plate, Accumulator Cover (req T-44892-TL) (All)	1	99-Up	S72929	44892-01K
530E	Spring, Accumulator (Inner/Outer Spring Combo) (All)	1-4	99-Up	92946B	4567575
534E	Piston, Accumulator (Aluminum) (All)	5	99-Up	92937	4446620
TECHNICAL MANUALS					
N.I.	Technical Manual (45RFE)	1	99-Up	72400A	45RFE
TOOLS					
N.I.	2nd Clutch Spring Installer	1	99-Up	T-8249	N.L.
N.I.	4th Clutch Spring Installer	1	99-Up	T-8250	N.L.
N.I.	Underdrive & Overdrive Spring Compressor	1	99-Up	T-8251	N.L.
N.I.	Low/ Reverse Spring Compressor	1	99-Up	T-8285	N.L.

Notes

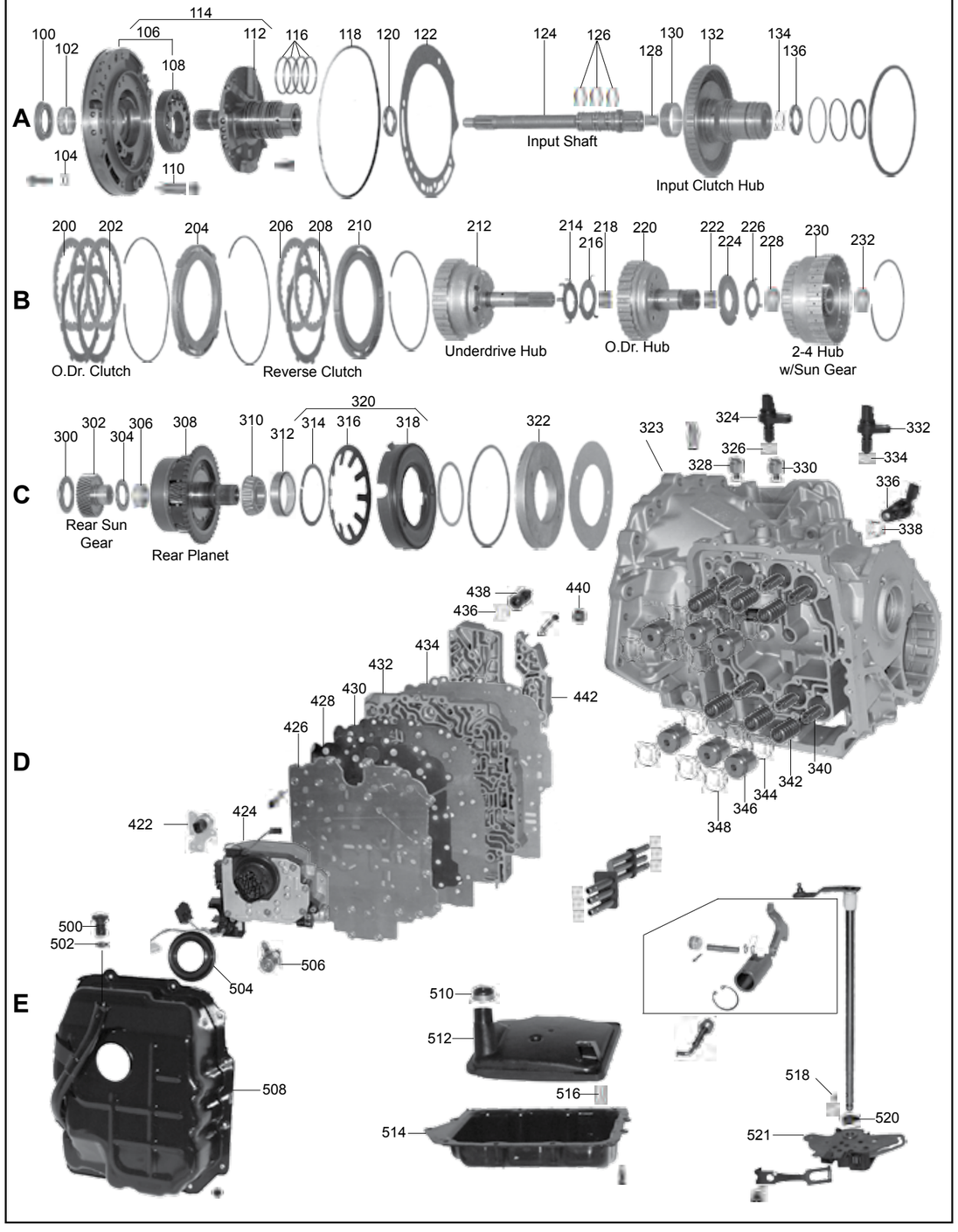
A
B
C
D
E
Input Shaft
Input Clutch Hub
O.Dr. Clutch
Reverse Clutch
Underdrive Hub
O.Dr. Hub
2-4 Hub
w/Sun Gear
Rear Sun
Gear
Rear Planet

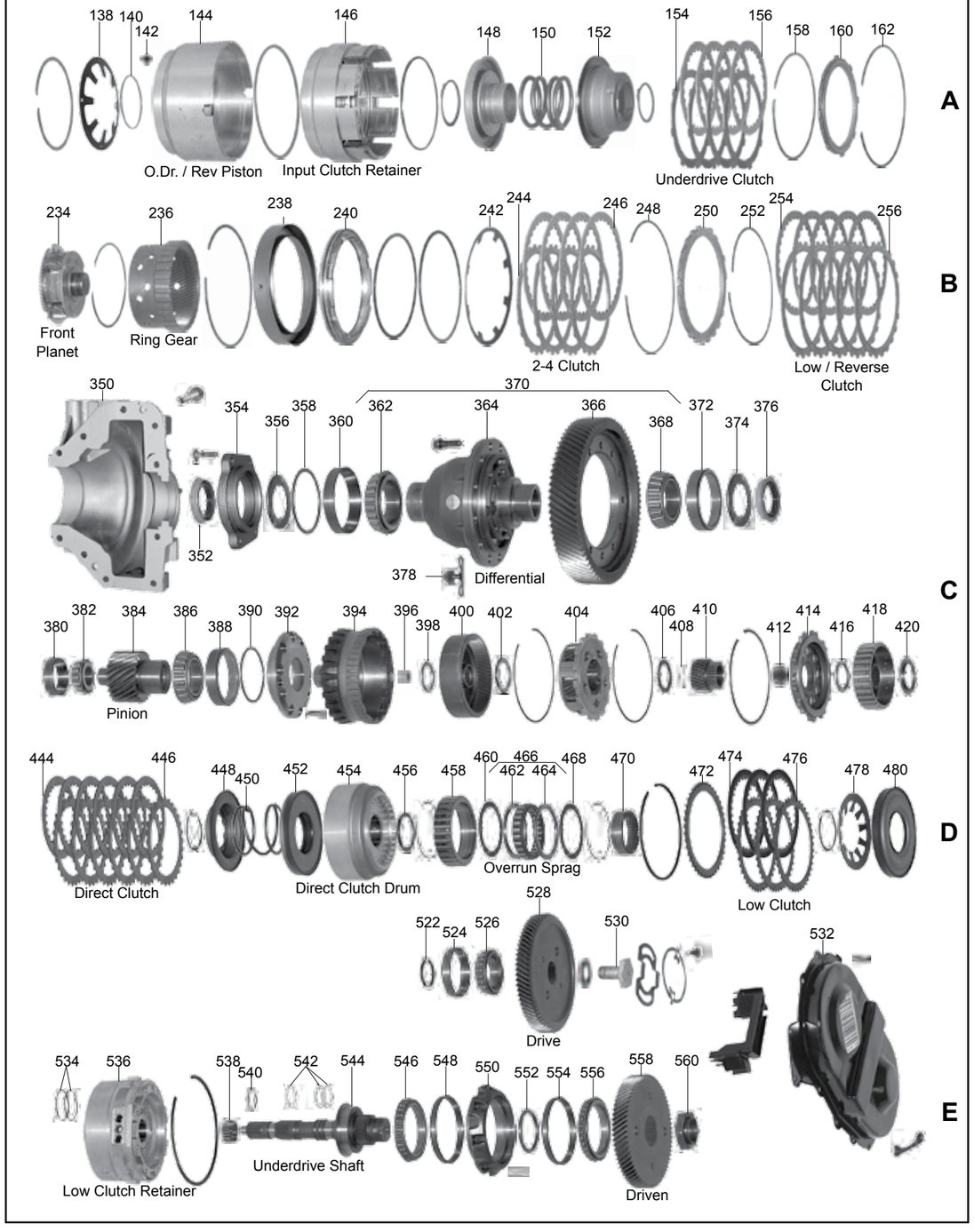
A
B
C
D
E
O.Dr. / Rev Piston
Input Clutch Retainer
Underdrive Clutch
Front
Planet
Ring Gear
2-4 Clutch
Low / Reverse
Clutch
Differential
Pinion
Direct Clutch
Direct Clutch Drum
Overrun Sprag
Low Clutch
Drive
Low Clutch Retainer
Underdrive Shaft
Driven

ILL.		Qty.	Year	Part #	Ref. #
MASTER OVERHAUL KITS (WITH STEELS)					
N.I.	62TE	1	06-Up	262006	N.L.
MASTER OVERHAUL KITS (LESS STEELS)					
N.I.	62TE	1	06-Up	262004	N.L.
OVERHAUL KITS (WITH RINGS AND SEALS)					
N.I.	62TE	1	06-Up	262002	N.L.
BONDED PISTONS					
N.I.	Piston Kit	1	06-Up	92960K	N.L.
152A	Retainer, Underdrive (Bonded)	1	06-Up	92960	4431612
240B	Piston, 2-4 (Bonded)	1	06-Up	92962B	5102880AA
318C	Piston, Low/Reverse (Bonded)	1	06-Up	262967B	5078591AA
448D	Piston, Reduction Direct Clutch Balance (Bonded)	1	06-Up	262985	5078625AA
452D	Piston, Direct (Bonded)	1	06-Up	262965	5078622AA
480D	Piston, Reduction Low Clutch (Bonded)	1	06-Up	262967	5078605AA
GASKETS & O-RINGS					
122A	Gasket, Pump	1	06-Up	262310	N.L.
N.I.	Gasket, Pan	1	06-Up	262300	N.L.
N.I.	Gasket, Valve Body Cover	1	06-Up	262301	N.L.
N.I.	Gasket, End	1	06-Up	262304	N.L.
METAL CLAD SEALS					
100A	Converter	1	06-Up	262070	5078684AA
352C	Axle	1	06-Up	32076	4412522
SEALING RINGS & KITS					
N.I.	Sealing Ring Kit	1	06-Up	262175K	N.L.
FRICTION PLATES					
156A	Underdrive	3-4	06-Up	92100B	4531678
200B	Overdrive	3-4	06-Up	92100B	4531678
208B	Reverse	2	06-Up	92100B	4531678
246B	2-4 Clutch	3-4	06-Up	92104	4567212
254B	Low/ Reverse	4-5	06-Up	92114	4567573
444D	Reduction Direct (Single Sided Internal Teeth)	6	06-Up	262116	N.L.
446D	Reduction Direct (Single Sided External Teeth)	6	06-Up	262136	N.L.
474D	Reduction Low	3	06-Up	262118	N.L.
STEEL PLATES					
154A	Underdrive	4	06-Up	92120	4531905
202B	Overdrive	3	06-Up	262120	N.L.
206B	Reverse	1	06-Up	92120	4531905
244B	2-4 Clutch	3-4	06-Up	262124	N.L.
256B	Low/ Reverse (.067")	4-5	06-Up	262134	N.L.
476D	Reduction Low	3	06-Up	262138	N.L.
PRESSURE PLATES					
160A	Underdrive Kit w/ Snap Ring (.248")	1	06-Up	92142FK	N.L.
160A	Underdrive Kit w/ Snap Ring (.268")	1	06-Up	92142GK	4883015AB
160A	Underdrive Kit w/ Snap Ring (.228")	1	06-Up	92142EK	4883013AB
FILTERS					
512E	62TE	1	06-Up	262010	68018555AA
FILTER KITS					
N.I.	62TE	1	06-Up	262011	N.L.
BUSHINGS					
N.I.	Bushing Kit	1	06-Up	262030	N.L.
102A	Pump	1	06-Up	12034	N.L.
102A	Overdrive Clutch Hub (Replaces Both Bushings) 1.142" OD Shaft	1	06-Up	92052E	92004-SP
102A	Overdrive Clutch Hub (Replaces Both Bushings) 1.162" OD Shaft	1	06-Up	92052EA	92004-L
128A	Input Shaft	1	06-Up	92047A	N.L.
130A	Input Clutch Hub	1	06-Up	92050	4377170

ILL.		Qty.	Year	Part #	Ref. #
BUSHINGS (Cont.)					
218B	Overdrive Clutch Hub	2	06-Up	92052A	4659617
228B	2-4 Clutch Hub	2	06-Up	92039A	4659619
306C	Rear Planet	1	06-Up	92058	4412230
N.I.	Direct Drum	1	06-Up	262046	N.L.
THRUST WASHERS/BEARINGS					
WASHERS					
N.I.	Washer Kit	1	06-Up	92200B	N.L.
BEARINGS					
N.I.	Bearing Kit	1	06-Up	92201A	N.L.
362C	Differential Front Bearing & Race	1	06-Up	262291K	N.L.
368C	Differential Rear Bearing & Race	1	06-Up	262289K	N.L.
380C	Pinion Gear Front Bearing & Race	1	06-Up	262274K	N.L.
386C	Pinion Gear Rear Bearing & Race	1	06-Up	262273K	N.L.
396C	Output Shaft (Caged Bearing)	1	06-Up	262062	N.L.
398C	Output to Underdrive Ring Gear	1	06-Up	262268	5078617AA
402C	Underdrive Ring Gear to Planet	1	06-Up	262217	5078643AA
412C	Transfer Shaft Front (Caged Bearing)	1	06-Up	262067	5078634AA
416C	Reaction Plate to Hub	1	06-Up	262216	68004116AA
420C	Hub to Underdrive Drum	1	06-Up	262214	5078636AA
456D	Underdrive Drum to Sprag Assembly	1	06-Up	262219	5078931AA
526E	Output Gear Bearing & Race	1	06-Up	262281K	N.L.
538E	Transfer Shaft Rear (Caged Bearing)	1	06-Up	262068	5169089AA
546E	Transfer Shaft Bearing & Race	1	06-Up	262279K	N.L.
556E	Transfer Gear Bearing & Race	1	06-Up	262278K	N.L.
ELECTRICAL COMPONENTS					
324C	Sensor, Input & Output	2	06-Up	262438	5078554AA
332C	Sensor, Transfer Speed	1	06-Up	262436	5078930AA
422D	Switch, Pressure Transducer	1	06-Up	262435	5078708AA
424D	Solenoid Block	1	06-Up	262420	5078709AB
506E	Solenoid, VFS (EPC)	1	06-Up	262431	5169313AA
521E	Sensor, Transmission Range (DTR)	1	06-Up	262410	68055955AA
PUMPS					
114A	Pump Assembly	1	06-Up	262500A	68052759AA
DRUMS & COMPONENTS					
146A	Input Clutch Retainer (w/o Bevel)	1	06-Up	92554A	4505623
146A	Drum Kit, Input Clutch Retainer (w/o Bevel)	1	06-Up	92554AK	5016198AA
148A	Piston, Underdrive	1	06-Up	92980A	4800231AA
152A	Retainer, Underdrive (Bonded)	1	06-Up	92960	4431612
212B	Clutch Hub, Underdrive w/ Solid Shaft	1	06-Up	92571	4864936AC
220B	Clutch Hub, Overdrive & Reverse	1	06-Up	92570A	4659993
230B	Clutch Hub & Sun Gear, 2nd-4th Clutch	1	06-Up	92578A	4659618AB
240B	Piston, 2-4 (Bonded)	1	06-Up	92962B	5102880AA
318C	Piston, Low/Reverse (Bonded)	1	06-Up	262967B	5078591AA
322C	Retainer, Low/Reverse Clutch	1	06-Up	92957A	4800255AA
418C	Hub (Compounder)	1	06-Up	262570B	5078654AA
448D	Piston, Reduction Direct Clutch Balance (Bonded)	1	06-Up	262985	5078625AA
452D	Piston, Direct (Bonded)	1	06-Up	262965	5078622AA
454D	Drum, Compound Direct	1	06-Up	262555	5078619AA
480D	Piston, Reduction Low Clutch (Bonded)	1	06-Up	262967	5078605AA
N.I.	Drum Kit, Compound Low (Includes UD Assy & Sun Gear Assy)	1	06-Up	262557K	5078815AC
PLANETS & COMPONENTS					
234B	Front	1	06-Up	92582A	4567539AB
236B	Ring Gear, Rear Planet	1	06-Up	92594	4799794
308C	Rear (5 Gear)	1	06-Up	262584	68017162AA
SUN GEARS					
302C	Sun Gear, Rear Planet	1	06-Up	92614	4377080
410C	Sun Gear (Compound)	1	06-Up	262610	5078632AA

ILL.		Qty.	Year	Part #	Ref. #
ONE WAY CLUTCHES					
466D	Sprag Assembly, Low Compounder	1	06-Up	262642	N.L.
SHAFTS					
394C	Output	1	06-Up	262678	5078637AB
VALVE BODIES & GOVERNORS					
432D	Valve Body	1	06-Up	262740	5078723AC
DIFFERENTIALS					
370C	79T Ring Gear	1	06-Up	262715	5078726AA
CASES/HOUSINGS & COMPONENTS					
323C	Case	1	06-Up	262760	68008550AA
514E	Pan, Bottom	1	06-Up	262765	5078556AA
MISCELLANEOUS COMPONENTS					
528E	Gear, Output (74T)	1	06-Up	262706	68021259AB
532E	Cover, Transfer Gear	1	06-Up	262759	5078570AB
558E	Gear, Transfer (70T)	1	06-Up	262705	68051321AA
TECHNICAL MANUALS					
N.I.	Technical Manual	1	06-Up	262400	N.L.
TOOLS					
N.I.	Dipstick Fluid Measuring Tool	1	06-Up	T-9336A	N.L.

Notes

TK TOLEDO TRANS-KIT · SEAL AFTERMARKET PRODUCTS your source for engineered solutions · BRYCO · ProSELECT · RoadMaster

PRODUCT ANNOUNCEMENT

Aisin AS68RC (A465) 6 Speed RWD Diesel Trucks 2006-Up

Seal Aftermarket Products now has the complete Overhaul Kit for the AS68RC transmission series covering 2006-Up.
Please call your Sales Representative for pricing and availability

Innovative Engineered Solutions

- Plastic Sealing Rings
- Cork or Fiber Gasket Option



Vehicle Coverage

Dodge
►Ram 3500 1-Ton Pickup 6.7L 2007-11
►4500HD Pickup 6.7L 2009-11

Isuzu/Mitsubishi
►NQR/NPR Tilt Cab 5.2L 2010
►Mitsu Fuso FE Series 2010

Freightliner
►M2 2010

Rebuild Kits

T172002 - Overhaul Kit AS68RC (A465) 2006-Up
TF172002 - Overhaul Kit AS68RC (A465) 2006-Up (Fiber)
TF172004 - Master L/Steels Kit AS68RC (A465) 2006-Up {Dodge Only}
TF172004A - Master L/Steels Kit AS68RC 2006-Up {Mitsubishi/Isuzu Only}
TF172006 - Master W/Steels Kit AS68RC (A465) 2006-Up {Dodge Only}
TF172006A - Master W/Steels Kit AS68RC 2006-Up {Mitsubishi/Isuzu Only}
172100 - Friction Module AS68RC (A465) 2006-Up {Dodge Only}
172100A - Friction Module AS68RC 2006-Up {Mitsubishi/Isuzu Only}
17281 - Steel Module AS68RC (A465) 2006-Up



Components



172074
Seal AS68RC Extension Housing 2006-Up (Mitsubishi)



172074A
Seal AS68RC (A465) Extension Housing 2006-Up (Dodge)



17207
Seal AS68RC (A465) Converter (Oil Pump) 2006-Up

Release Date 8/14/2013

Sales Policy: All shipments are FCA Pembroke Park. Price and Availability subject to change
© 2013 Seal Aftermarket Products LLC. ALL RIGHTS RESERVED. Possession of price list does not constitute offer to sell
Disclaimer - All information has been checked for accuracy, however no liability can be assumed for errors and omissions

Seal Aftermarket Products LLC · 2315 SW 32nd Avenue · Pembroke Park FL 33023 · [P] (800) 582-2760 · [F] 954-364-2401 · www.sealaftermarketproducts.com

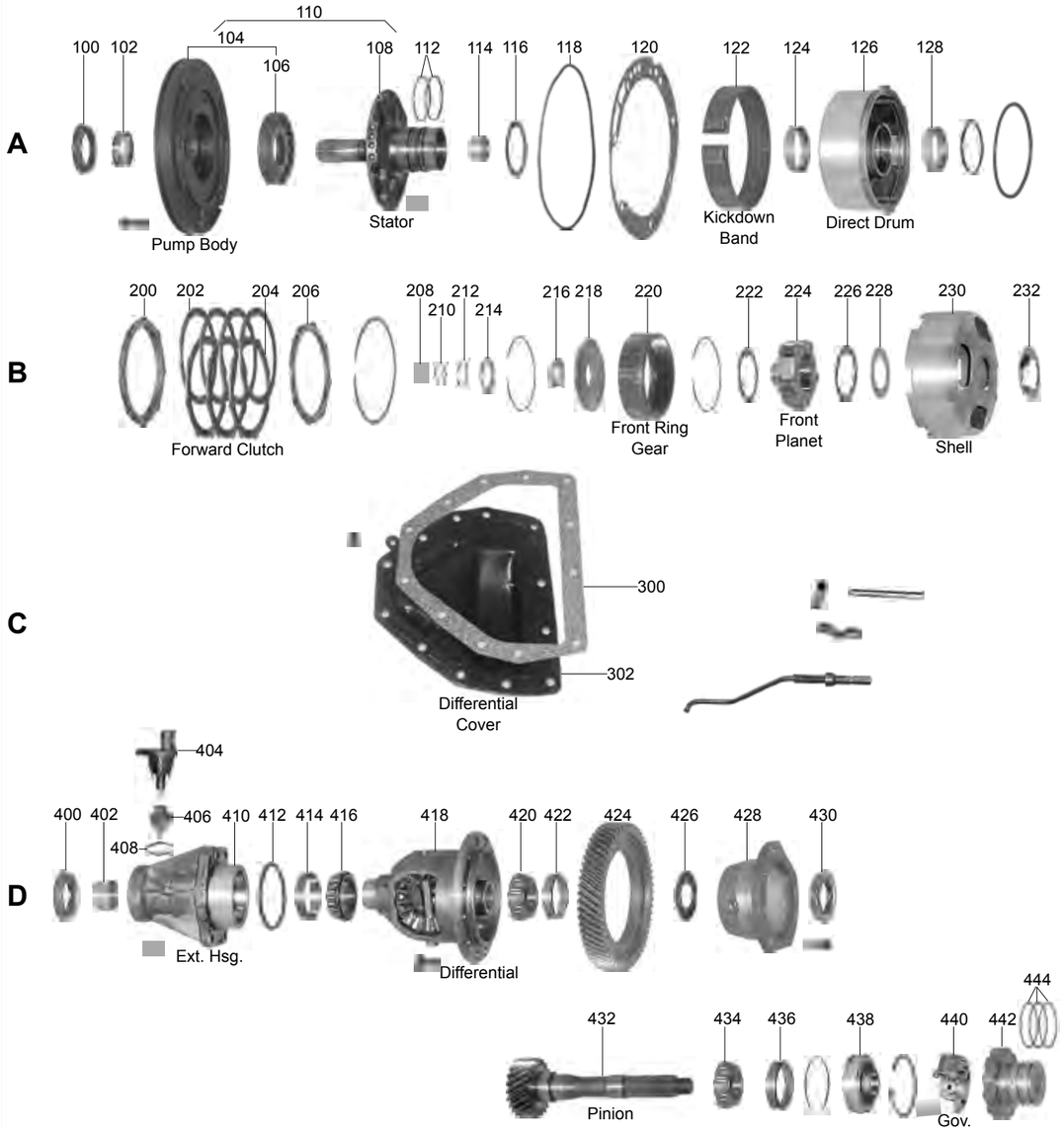
A
B
C
D
100 102 104 106 108 110 112 114 116 118 120 122 124 126 128
Pump Body
Stator
Kickdown Band
Direct Drum
200 202 204 206 208 210 212 214 216 218 220 222 224 226 228 230 232
Forward Clutch
Front Ring Gear
Front Planet
Shell
300
302
Differential Cover
404
400 402 406 408 410 412 414 416 418 420 422 424 426 428 430
Ext. Hsg.
Differential
432 434 436 438 440 442 444
Pinion
Gov.

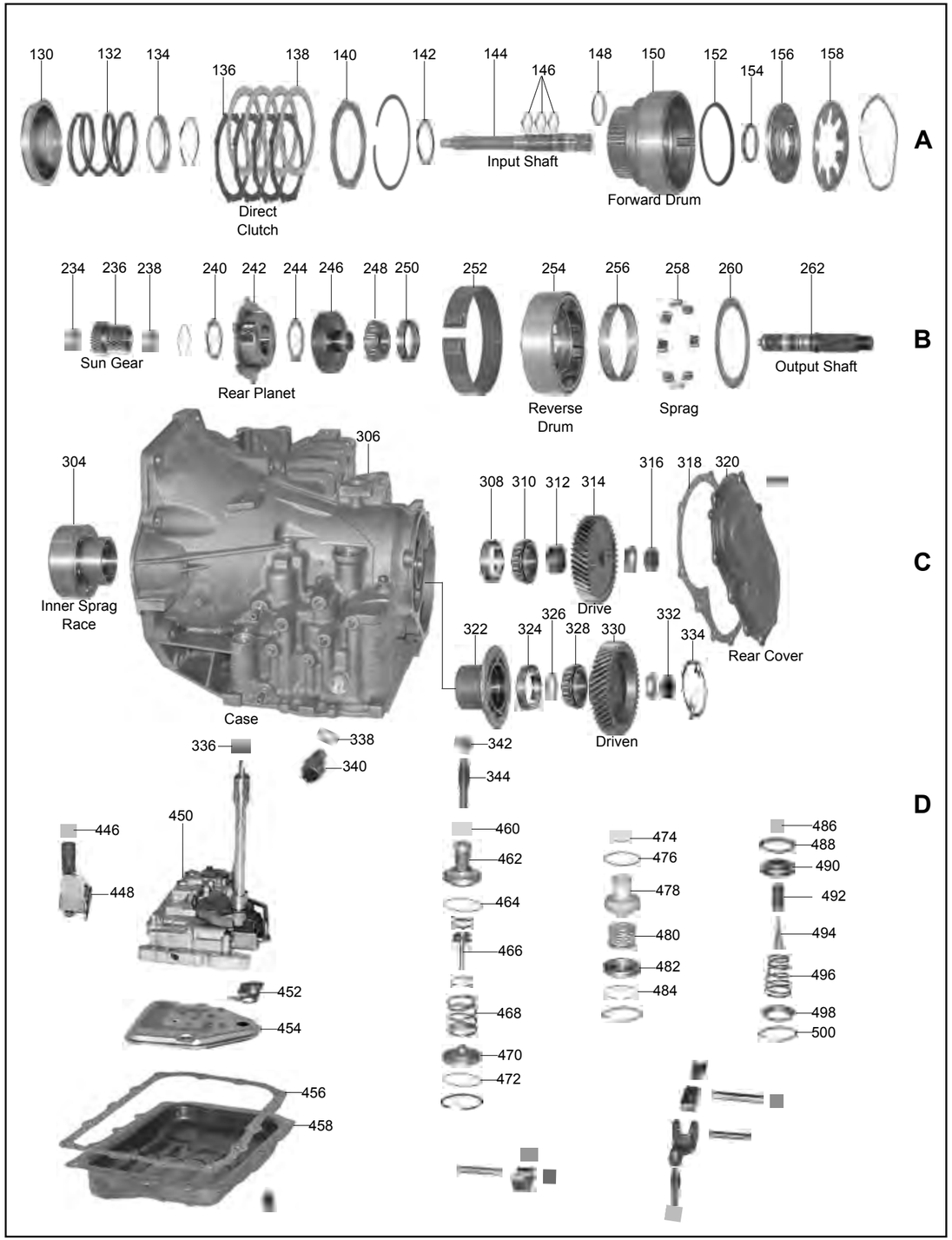
A
B
C
D
130 132 134 136 138 140 142 144 146 148 150 152 154 156 158
Direct Clutch
Input Shaft
Forward Drum
234 236 238 240 242 244 246 248 250 252 254 256 258 260 262
Sun Gear
Rear Planet
Reverse Drum
Sprag
Output Shaft
304
306
Inner Sprag Race
Case
308 310 312 314 316 318 320
Drive
Rear Cover
322 324 326 328 330 332 334
Driven
336 338 340
342 344
446 448 450
452 454
456 458
460 462 464 466 468 470 472
474 476 478 480 482 484
486 488 490 492 494 496 498 500

ILL.		Qty.	Year	Part #	Ref. #
DELUXE KITS (SUPER KITS WITH STEELS)					
N.I.	A413, 470, 670 w/ Plastic Filter	1	83-Up	32008A	N.L.
MASTER OVERHAUL KITS (WITH STEELS)					
N.I.	A413, 470, 670	1	81-Up	32006A	N.L.
MASTER OVERHAUL KITS (LESS STEELS)					
N.I.	A413, 470, 670	1	81-Up	32004A	N.L.
OVERHAUL KITS (WITH RINGS AND SEALS)					
N.I.	A413, 470, 670	1	81-Up	32002A	N.L.
GASKETS & O-RINGS					
118A	O-Ring, Front Pump	1	78-Up	92311	5205660
120A	Gasket, Pump	1	78-Up	32310	5212306
300C	Gasket, Differential Cover	1	78-Up	32303	5212276
318C	Gasket, Transfer Gear Cover	1	78-Up	32304	5222142
408D	O-Ring, Speed-O Adapter	1	78-Up	32368	6025752
452D	Gasket, Filter	1	83-Up	32326	4269671
456D	Gasket, Bottom Pan	1	78-Up	32300	5224052
METAL CLAD SEALS					
100A	Front Pump	1	78-Up	12070	4412475
336C	Manual Shaft	1	78-Up	22072	2466842
400D	Axle (Left & Right)	2	78-Up	32076	4412522
SEALING RINGS & KITS					
N.I.	Ring Kit	1	81-Up	32175AK	N.L.
FRICTION PLATES					
138A	Direct	2-4	78-Up	32106	5205675
202B	Forward (49T)	2-4	81-Up	32108A	5224084
STEEL PLATES					
136A	Direct (.101")	3-4	81-Up	32126A	4207208
204B	Forward (.065") (4.10" ID)	4	78-80	32126	5205677
N.I.	Steel Module, 413, 470, 670	1	81-Up	32139A	N.L.
PRESSURE PLATES					
140A	Direct (.186")	1	81-Up	32146B	4348888
140A	Direct (.207")	1	81-Up	32146C	4207209
200B	Reaction Plate, Forward Beveled (.110")	1	83-Up	32149A	4269618
206B	Forward (.200")	1	81-Up	32148	N.L.
206B	Forward (.263")	1	81-Up	32148A	4269619
FILTERS					
454D	A404, 413 (Felt)	1	78-82	32010	5212145
454D	A413, 470, 670 (Plastic)	1	83-Up	32010A	4269649
N.I.	Governor Screen	1	78-Up	32014	5258839
FILTER KITS					
N.I.	Filter Kit, A404, 413 (Felt)	1	78-82	32011	N.L.
N.I.	Filter Kit, A413, 470, 670 (Plastic)	1	83-Up	32011A	N.L.
BANDS					
122A	Kickdown, Flex	1	78-Up	32022	5212312
122A	Kickdown, Semi-Rigid	1	96-Up	32022A	5212312
252B	Reverse	1	78-Up	32024	5205765
BUSHINGS					
N.I.	Bushing Kit	1	78-Up	32030	N.L.
102A	Pump Body	1	78-Up	12034	2466796
402D	Extension Housing	1	78-Up	32066	5212223

ILL.		Qty.	Year	Part #	Ref. #
THRUST WASHERS/BEARINGS					
WASHERS					
N.I.	Washer Kit	1	78-95	32200B	N.L.
N.I.	Washer Kit	1	96-Up	32200C	N.L.
116A	Stator to Direct Drum (Fiber)	1	78-Up	32211	5205679
142A	Forward Drum to Direct Drum (Fiber)	1	78-Up	32229	5205680
208B	Input Shaft to Output Shaft .079"	1	78-Up	32268	5224039
208B	Input Shaft to Output Shaft .085"	1	78-Up	32268A	5224040
208B	Input Shaft to Output Shaft .093"	1	78-Up	32268B	5224041
214B	Forward Drum to Forward Hub	1	78-Up	32232	5222493
222B	Front & Rear Planet (4 Tab, 2 11/16" OD)	4	81-Up	32238A	5224066
222B	Front & Rear Planet (5 Tabs)	1	96-Up	32238B	4659163
260B	Rear Band Drum to Case (Fiber)	1	78-Up	32257	5205772
BEARINGS					
228B	Race, Sun Shell (w/ 3 Inner T)	1	81-Up	32242A	5224236
248B	Bearing & Race Kit, Rear Ring Gear & Drive Gear	2	78-Up	32254K	FU60-19-6AO
416D	Bearing & Race Kit, Differential Carrier and Transfer Shaft (22 Rollers)	4	78-Up	32274K	4269688
416D	Bearing & Race Kit, Differential Carrier (Left Side) 1.624" ID (19 Rollers)	1	96-Up	32274AK	N.L.
N.I.	Shim Kit, Pinion (.005") (10 Per Kit)	1	78-Up	32278K	N.L.
N.I.	Shim Kit, Differential (.005")	1	78-Up	92293AK	N.L.
N.I.	Shim Kit, Differential (.005") (Large OD Bearing)	1	78-Up	92293BK	N.L.
ELECTRICAL COMPONENTS					
340C	Switch, Neutral Safety	1	78-Up	12410A	4057750
448D	Solenoid, Lock-Up (TCC)	1	87-Up	32425	4799954AA
VALVE BODY RECALIBRATION KITS					
N.I.	Shift Kit®, A470-A670 w/ Lockup (Includes Dirt Diaper) (Transgo®)	1	81-Up	T32165A	SK® 670
PUMPS					
110A	Pump (2 & 3 Ring Input Shaft)	1	86-98	32500A	4412525
110A	Pump (Non Crescent 12 Lobe Drive Gear)	1	99-Up	32500B	5016410AB
PUMP COMPONENTS					
106A	Pump Gears (.591" w/ 2 Lugs on Inner Gear)	1	78-85	32530A	N.L.
106A	Pump Gears (.589" w/ Mill Flats on Inner Gear)	1	86-Up	32530B	N.L.
106A	Pump Gears (12T Inner, Rotor Type) (A670)	1	99-Up	92530B	N.L.
DRUMS & COMPONENTS					
126A	Direct (4 Clutch)	1	L86-Up	32555B	5015496AB
150A	Forward (4 Clutch)	1	L86-Up	32554D	4248916
158A	Spring, Forward Clutch Bellville Return Spring	1	78-Up	32974	4269623
254B	Low/ Reverse (Band Drum)	1	81-Up	32556A	4207117
PLANETS & COMPONENTS					
218B	Hub, Front Ring Gear	1	81-Up	32602A	5224070
220B	Ring Gear, Front	1	81-Up	32592A	5224310
224B	Front (4 Gear) (36T Sun Gear)	1	81-95	32582A	4269941
224B	Front (5 Gear) (36T Sun Gear)	1	96-Up	32582B	4348900
242B	Rear (4 Gear Square Housing)	1	78-95	32584	4659414
242B	Rear (4 Gear Round Housing)	1	96-Up	32584B	4269942
246B	Ring Gear, Rear	1	78-Up	32594	5222047
SUN GEARS					
236B	Sun Gear (29T, 36T)	1	81-Up	32612A	5224192
ONE WAY CLUTCHES					
258B	Spring & Roller Kit	1	78-Up	32654K	4186886
304C	Inner Race Kit, Rear Sprag (Inner Race & Bolts)	1	81-Up	32664AK	N.L.
SHELLS & SUPPORTS					
230B	Shell	1	81-Up	32622A	N.L.
SHAFTS					
262B	Output Shaft (6.500" Long)	1	81-Up	32678A	4348932

ILL.		Qty.	Year	Part #	Ref. #
VALVE BODIES & GOVERNORS					
322C	Retainer, Governor Support	1	78-Up	32687	5212371
440D	Governor	1	81-Up	32680A	4659366
442D	Support, Governor (.500" Thick Park Lugs)	1	78-Up	32685	5212249
442D	Support, Governor (.625" Thick Park Lugs)	1	78-Up	32685A	4431504
450D	Valve Body Non Lock-Up	1	81-86	32740-1	N.L.
450D	Valve Body Lock-Up w/o Thermal Bypass	1	87-Up	32740-2	N.L.
450D	Valve Body Lock-Up w/ Thermal Bypass	1	99-Up	32740-3	N.L.
N.I.	Spring, Governor Anti-Stick (Installs Inside the Governor)	1	78-Up	A32681-3	N.L.
DIFFERENTIALS					
418D	Diff Housing, 8 Bolt w/o Ring Gear	1	81-E87	32716A	4269768
418D	Diff Housing, 12 Bolt w/o Ring Gear (Small ID)	1	L87-95	32716B	N.L.
418D	Diff Housing, 12 Bolt w/o Ring Gear (Large ID)	1	96-Up	32716BA	N.L.
432D	Ring & Pinion (8 Bolt) 20T Pinion, 61T Ring Gear	1	78-E87	32730FK	N.L.
432D	Ring & Pinion (8 Bolt) 21T Pinion, 60T Ring Gear	1	78-E87	32730LK	N.L.
432D	Ring & Pinion (12 Bolt) 20T Pinion, 61T Ring Gear	1	L87-Up	32730HK	N.L.
432D	Ring & Pinion (12 Bolt) 21T Pinion, 60T Ring Gear	1	L87-Up	32730JK	N.L.
N.I.	Clips, Differential Shaft	1	87-Up	32717A-4	4800059AA
N.I.	Differential Pin Shaft	1	87-Up	32717A-3	4659142
N.I.	Differential Shaft Pin (Solid)	1	78-Up	32736	6503827
CASES/HOUSINGS & COMPONENTS					
302C	Differential Cover, w/o Plug	1	82-Up	32758A	4471574
320C	Rear Cover, Transfer Gear	1	86-Up	32759A	4471572
MISCELLANEOUS COMPONENTS					
N.I.	Gear Kit, Output / Transfer (53T / 56T)	1	78-Up	32710AAK	N.L.
N.I.	Gear Kit, Output / Transfer (57T / 52T)	1	78-Up	32710CK	N.L.
TECHNICAL MANUALS					
N.I.	Tech Manual, 670	1	87-Up	32400C	TM-A670

Notes

Notes

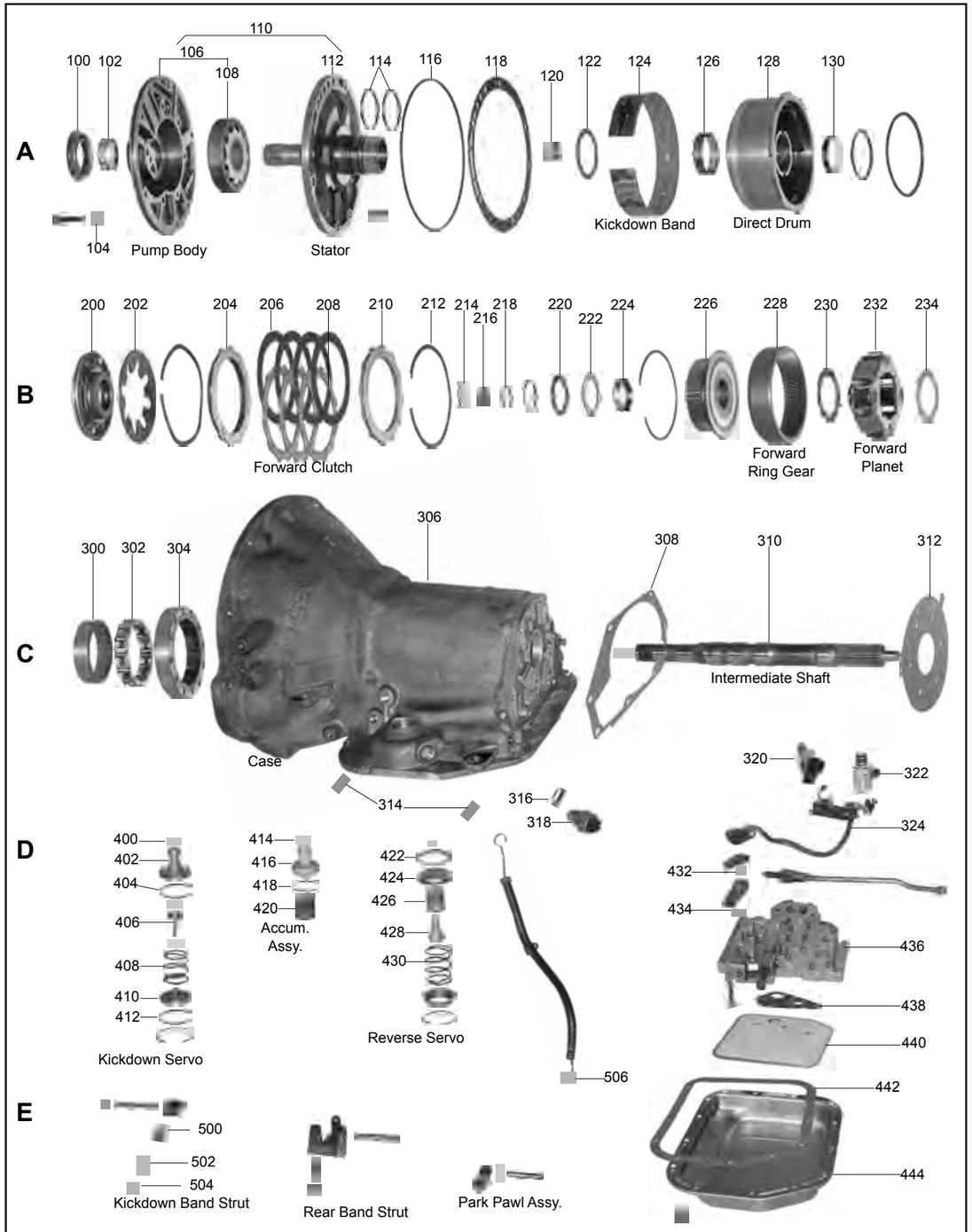
A
100
102
104
Pump Body
106
108
110
112
Stator
114
116
118
120
122
Kickdown Band
124
126
Direct Drum
128
130
B
200
202
204
206
Forward Clutch
208
210
212
214
216
218
220
222
224
226
Forward Ring Gear
228
230
Forward Planet
232
234
C
300
302
304
Case
306
308
Intermediate Shaft
310
312
314
316
318
320
322
324
D
400
402
404
406
408
410
412
Kickdown Servo
414
416
418
420
Accum. Assy.
422
424
426
428
430
Reverse Servo
432
434
436
438
440
442
444
506
E
500
502
504
Kickdown Band Strut
Rear Band Strut
Park Pawl Assy.

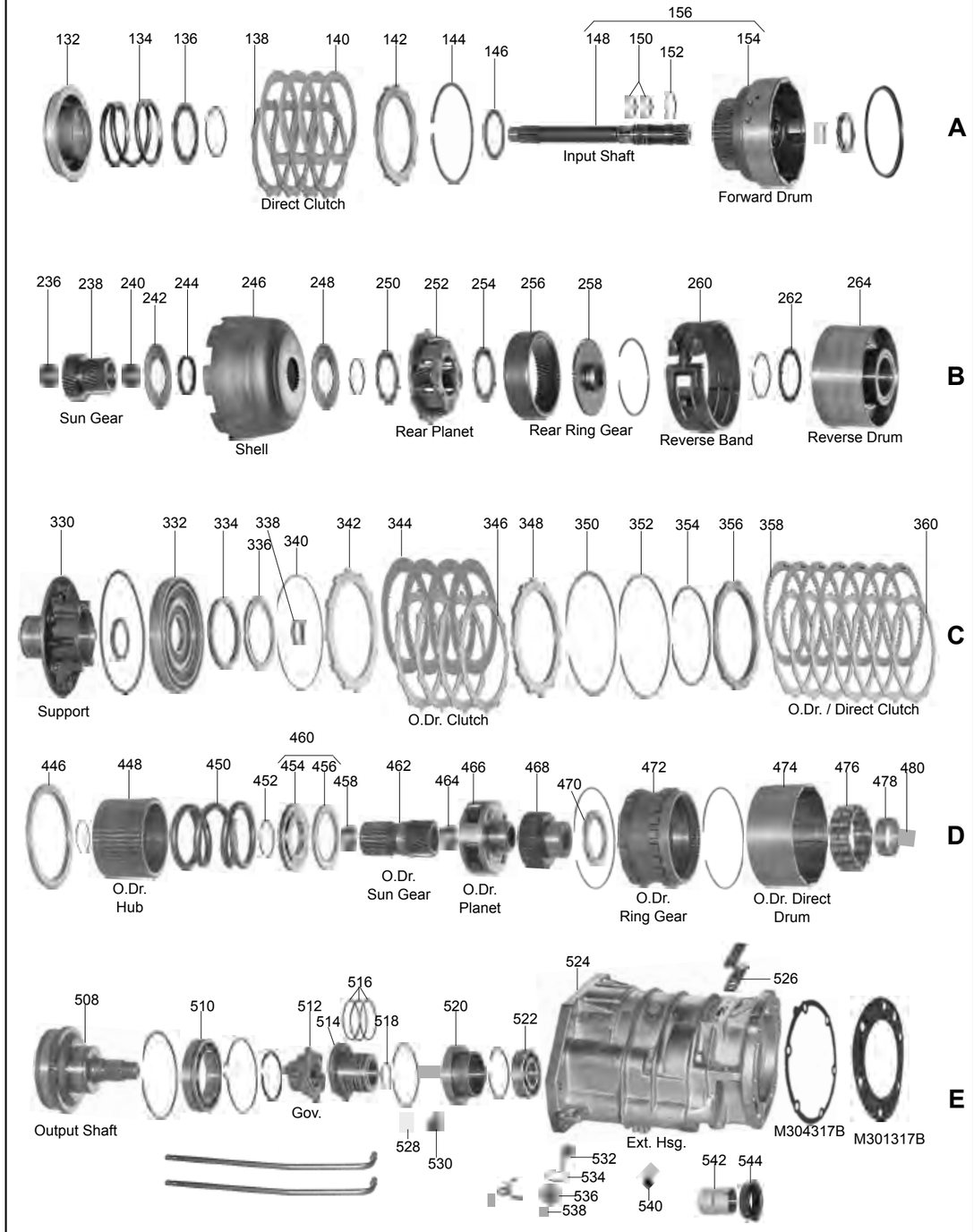
A
132
134
136
Direct Clutch
138
140
142
144
146
148
150
152
154
156
Input Shaft
Forward Drum
B
236
238
240
242
Sun Gear
244
246
Shell
248
250
252
Rear Planet
254
256
Rear Ring Gear
258
260
Reverse Band
262
264
Reverse Drum
C
330
Support
332
334
336
338
340
342
344
O.Dr. Clutch
346
348
350
352
354
356
358
O.Dr. / Direct Clutch
360
D
446
448
O.Dr. Hub
450
452
454
456
458
460
462
O.Dr. Sun Gear
464
466
O.Dr. Planet
468
470
472
O.Dr. Ring Gear
474
476
478
480
O.Dr. Direct Drum
E
508
Output Shaft
510
512
514
516
Gov.
518
520
522
524
526
528
530
Ext. Hsg.
M304317B
M301317B
532
534
536
538
540
542
544

ILL.		Qty.	Year	Part #	Ref. #
DELUXE KITS (SUPER KITS WITH STEELS)					
N.I.	A500, 42RE, 44RE	1	88-98	12008E	N.L.
N.I.	A500, 42RE, 44RE	1	99-04	12008EA	N.L.
MASTER OVERHAUL KITS (WITH STEELS)					
N.I.	A500, 42RE, 44RE	1	88-98	12006E	N.L.
N.I.	A500, 42RE, 44RE	1	99-04	12006EA	N.L.
MASTER OVERHAUL KITS (LESS STEELS)					
N.I.	A500, 42RE, 44RE	1	88-04	12004E	N.L.
OVERHAUL KITS (WITH RINGS AND SEALS)					
N.I.	A500, 42RE, 44RE	1	88-04	12002E	N.L.
GASKETS & O-RINGS					
104A	Gasket, Pump Bolt Washer	1	88-04	44309	MD707653
116A	O-Ring, Front Pump	1	88-04	12311	2204709
118A	Gasket, Front Pump	1	88-04	12310	52118266
308C	Gasket, Extension Housing to Case	1	88-04	12305AF	4531192
312C	Gasket, Overdrive Clutch Piston Retainer to Case	1	88-04	12305C	4531190
316C	Gasket/Washer, Neutral Switch	1	88-04	12377A	2408143
432D	Seal, Throttle Lever Shaft	1	88-04	12349	2466548
442D	Gasket, Pan	1	88-04	12300	4295875
506E	Boot, Filler Tube	1	97-04	12371	52118629
506E	O-Ring, Filler Tube	1	88-04	44371A	6030608
526E	Gasket, Output Shaft Bearing Cover	1	88-04	12305J	2801398
534E	O-Ring, Speed-O Housing (Red)	1	88-04	12368	6031370
N.I.	Gasket Kit, Valve Body (Aftermarket Upgrade)	1	88-04	12320AK	N.L.
N.I.	Gasket, Solenoid	1	88-04	12328A	4446194
N.I.	Gasket, Governor Solenoid Body	1	93-04	12328B	N.L.
METAL CLAD SEALS					
100A	Front Pump	1	88-04	12070	4412475
434D	Manual Shaft .250" Thick	1	88-04	22072	2466842
434D	Manual Shaft .375" Thick	1	88-04	22072A	2466842
544E	Rear (w/o Boot)	1	88-04	36074	C3AZ-7052A
544E	Rear (w/ Boot)	1	88-04	36074B	C1DP-7052A
544E	Rear (4wd, Transfer Case Adapter)	1	88-04	12074J	4269956
SEALING RINGS & KITS					
N.I.	Ring Kit	1	88-04	12175EK	N.L.
N.I.	Ring Kit, 1-2 Accumulator (Viton D-Rings)	1	88-04	12191K	N.L.
114A	Stator Support	2	88-04	12179A	447184
150A	Input Shaft (Lock Joint)	1-2	88-04	12177A	1401221
516E	Governor Support	2-3	88-04	12189B	4461011
FRICTION PLATES					
140A	Direct	3-5	88-04	12106	4239805
140A	Direct (Hi-Energy)	3-5	88-04	12106A	4617362
140A	Direct (High Performance)	3-5	88-04	12106HP	N.L.
206B	Forward	3-4	88-04	12108	3780285
206B	Forward (Hi-Energy)	3-4	88-04	12108A	4713880
206B	Forward (High Performance)	3-4	88-04	12108HP	N.L.
344C	Overdrive Brake (Waved) Hi-Energy	4	88-04	12100B	4461162
358C	Overdrive Direct	6-8	88-04	12102	4461042
358C	Overdrive Direct (High Performance)	6-8	88-04	12102HP	N.L.
STEEL PLATES					
138A	Direct (.068")	3-4	88-98	12126	1942403
138A	Direct (.068") (Kolene)	3-4	88-98	12126K	1942403
138A	Direct (.088") (Oversized)	AR	88-98	12126X	N.L.
138A	Direct (.086") (V-Notched Teeth)	4-5	99-04	12126A	1942403AC
208B	Forward (.068")	3-4	88-04	12126	1942403
208B	Forward (.068") (Kolene)	3-4	88-04	12126K	1942403
208B	Forward (.088") (Oversized)	AR	88-04	12126X	N.L.
346C	Overdrive Brake (.068") (Kolene)	2-3	88-04	12120K	4461047
346C	Overdrive Brake (.068")	2-3	88-04	12120	4461047

ILL.		Qty.	Year	Part #	Ref. #
STEEL PLATES (Cont.)					
360C	Overdrive Direct (.054")	5-7	88-04	12122A	4864053
360C	Overdrive Direct (.054") (Kolene)	5-7	88-04	12122AK	4864053
360C	Overdrive Direct (.069")	5-7	88-04	12122	4461054
N.I.	Steel Module	1	88-98	12139E	N.L.
N.I.	Steel Module	1	99-04	12139EA	N.L.
PRESSURE PLATES					
142A	Forward & Direct (Flat)	1	88-04	12146	2801969
342C	Pressure Plate, Overdrive Brake (.380")	1	88-92	12140	4461048
342C	Pressure Plate, Overdrive Brake (.215")	1	93-04	12141	4461033
342C	Reaction Plate, Overdrive Brake (.215")	1	88-04	12141	4461033
356C	Reaction Plate, Overdrive Direct (.085" Stepped to .215")	1	88-04	22142	4461183
356C	Reaction Plate, Overdrive Direct (.214")	1	88-04	12142	4461031
446D	Pressure Plate, Overdrive Direct (Rear)	1	88-04	12143	4461030
FILTERS					
440D	Large Dacron	1	88-97	12010C	3515996
440D	Metal & Plastic	1	98-04	12010J	52118789
N.I.	Governor Screen	1	88-04	12014	3743519
N.I.	Valve Body Regulator Feed Line	1	88-04	12018	3878313
N.I.	Overdrive Screen & Orifice	1	88-04	12484	4412583
FILTER KITS					
N.I.	Filter Kit, Dacron	1	88-97	12011G	N.L.
N.I.	Filter Kit, Metal & Plastic	1	98-04	12011J	N.L.
BANDS					
124A	Kickdown, Flex (1.375" Wide)	1	88-91	12022AA	4058863
124A	Kickdown, Flex (1.375" Wide) (Semi Rigid)	1	88-91	12022AD	4531221
124A	Kickdown, Flex (1.60" Wide)	1	92-04	12022B	4617849
260B	Reverse, Single Wrap	1	88-04	12024	4443184
260B	Reverse, Double Wrap (2.0" Wide)	1	88-04	12024A	4443184
BUSHINGS					
N.I.	Bushing Kit (w/o Overdrive Bushings)	1	88-E92	12030B	N.L.
N.I.	Bushing Kit (w/o Overdrive Bushings)	1	L92-04	12030BA	N.L.
N.I.	Bushing Kit, Complete (w/ Overdrive Bushings)	1	88-E92	12030EB	N.L.
N.I.	Bushing Kit (Overdrive Section Only)	1	88-04	12030E	N.L.
102A	Pump Body (Babbitt)	1	88-04	12034	2466796
102A	Pump Body (Bronze)	1	88-04	12034A	2466796
120A	Stator	1	88-04	12037A	4058635
126A	Direct Drum (Wide)	1	88-E92	12046	2801727
126A	Direct Drum (Front)	1	93-04	12046B	4617157
130A	Direct Drum (Rear)	1	L92-04	12046C	4617159
224B	Front Ring Gear Hub	1	88-04	12050	3681967
236B	Sun Gear	2	88-04	12052	1942496
458D	Overdrive Sun Gear (Front)	1	90-93	12040	4461025
458D	Overdrive Sun Gear (Front) w/ Flange	1	94-E99	12040A	N.L.
458D	Overdrive Sun Gear (Front)	1	L99-04	12040B	5015107AA
464D	Overdrive Sun Gear (Rear)	1	90-04	12040	4461025
478D	Output Shaft Large (2.144" ID)	1	88-04	12062	4461006
480D	Output Shaft Small Pilot (.605" ID)	1	88-04	12062B	4461007
542E	Extension Housing	1	88-04	36066	B5AZ-7A034A
THRUST WASHERS/BEARINGS					
WASHERS					
N.I.	Washer Kit (w/ Popular Selectives)	1	88-04	12200B	N.L.
N.I.	Shim Kit, End Play (Includes 3 Each of .015" & .025" Shims)	1	88-04	22232K	N.L.
122A	Direct Drum (Front & Rear) (Fiber) (.062")	2	88-04	12211	4617786
216B	Output Shaft (.052") (Metal, 2 Internal Flats)	1	88-89	12233C	4269196
216B	Output Shaft (.052") (Metal, 3 Tab)	1	90-04	12233D	4505185
216B	Output Shaft (.068") (Metal, 2 Internal Flats)	1	88-89	12233CA	4269197
216B	Output Shaft (.068") (Metal, 3 Tab)	1	90-04	12233DA	4505186
216B	Output Shaft (.083") (Metal, 2 Internal Flats)	1	88-89	12233CB	4269198
216B	Output Shaft (.083") (Metal, 3 Tab)	1	90-04	12233DB	4505187

ILL.		Qty.	Year	Part #	Ref. #
WASHERS (Cont.)					
220B	Forward Drum to Hub (1.500" ID)	1	88-04	12234A	3681969
234B	3 Gear Front & Rear Planet (3 Outer Tangs)	4	88-04	12238A	3743027
234B	4 Gear Front & Rear Planet (4 Inner Tangs) (2.625")	2	88-04	12238C	4130518
262B	Rear Drum to Snap Ring (1 Tab)	1	88-04	12254	4431435
334C	Overdrive Piston to Hub (.124")	1	88-04	12213A	4431585
334C	Overdrive Piston to Hub (.155")	1	88-04	12213C	4431586
334C	Overdrive Piston to Hub (.184")	1	88-04	12213E	4431587
334C	Overdrive Piston to Hub (.213")	1	88-04	12213G	4431588
334C	Overdrive Piston to Hub (.228")	1	88-04	12213H	4431734
BEARINGS					
N.I.	Bearing Kit	1	88-04	22201A	N.L.
214B	Race, Input Shaft Cup	1	88-89	12232	4058982
214B	Race, Output Shaft	1	90-04	12232A	4505188
336C	Bearing, Overdrive Piston to Hub	1	88-04	12214	4446724
338C	Spacer, Intermediate Shaft to Overdrive Planet (.158")	1	88-04	12215	4431916
338C	Spacer, Intermediate Shaft to Overdrive Planet (.175")	1	88-04	12215A	4431917
338C	Spacer, Intermediate Shaft to Overdrive Planet (.193")	1	88-04	12215B	4431918
338C	Spacer, Intermediate Shaft to Overdrive Planet (.211")	1	88-04	12215C	4431919
456D	Bearing & Thrust Plate, Overdrive Planet to Hub (Update)	1	88-04	12220	4740774
456D	Bearing, Overdrive Planet to Hub (3.853" OD)	1	88-04	12221A	4461126
470D	Bearing, Overdrive Inner Sprag Race to Output Shaft (3.210" OD)	1	88-04	12222	4461014
510E	Bearing, Output Shaft (Front)	1	88-04	12271	4461008
522E	Bearing, Output Shaft (Rear)	1	88-04	22272A	2466224
522E	Bearing, Output Shaft (w/ Bolt-On Yoke)	1	88-04	22272B	1672194
N.I.	Shim Kit, Overdrive Set Up	1	88-04	12213K	12783-01K
N.I.	Shim Kit, End Play (Includes 3 Each of .015" & .025" Shims)	1	88-04	22232K	N.L.
ELECTRICAL COMPONENTS					
318C	Neutral Safety Switch, 3 Prong (Short)	1	88-97	12410A	4057750
318C	Neutral Safety Switch/ Back-Up Light (3 Prong Screw in)	1	98-04	12410C	56028181AB
318C	Neutral Safety Switch/ Back-Up Light (5 Prong Push in)	1	01-04	12410D	56045489AB
318C	Neutral Safety Switch MLPS Adapter (Late to Early Case)	1	88-04	22761S	N.L.
320C	Sensor, Governor Pressure (Transducer) (3 Pin)	1	93-95	12415A	56027562
320C	Sensor, Governor Pressure (Transducer) (4 Pin Round Connector)	1	96-00	12415B	56027720
320C	Sensor, Governor Pressure (Transducer) (4 Pin Rectangular Connector)	1	00-04	12415C	56028196AD
322C	Solenoid, Governor Pressure	1	93-04	12432A	4617210
324C	Solenoid, Overdrive (Single) (No TCC)	1	89-95	22420	4531253
324C	Solenoid, OD/TCC (Dual) (3 Pin Case Connector)	1	90-95	12420	4431954
324C	Solenoid, OD/TCC (Dual) (8 Pin Round & 4 Pin Oval)	1	96-99	12420B	52118500
324C	Solenoid, OD/TCC (Dual) (8 Pin Round & 4 Pin Rectangle)	1	00-04	12420C	52118500AB
540E	Sensor, Output Speed (VSS) (A500ES, 42RE, 44RE)	1	94-04	92436	4800879
N.I.	Repair Kit, Governor Solenoid w/ Tool Kits (Transgo®) Will Repair 6 Units	1	95-04	T12432RK	N.L.
N.I.	Repair Kit, Harness (Solenoid)	1	94-04	12445BK	N.L.
N.I.	Repair Kit, Harness (Neutral Safety Switch)	1	88-04	12445CK	4209695
VALVE BODY RECALIBRATION KITS					
N.I.	Shift Kit® (Diesel) (Transgo®)	1	88-04	T22165B	SK® TFOD-D
N.I.	Shift Kit® (Gas) w/ & w/o Electronic Governor (Transgo®)	1	89-04	T22167	SK® TFOD-JR
N.I.	Valve Body Kit, Gas & Diesel (Superior)	1	88-98	S22167	K500-618
N.I.	Valve Body Kit, Gas & Diesel (Superior)	1	99-04	S22167A	K500-618-L
N.I.	Reprogramming Kit™, TFOD, 4 Speed HD & Hi-Perf (Transgo®)	1	88-04	T22169B	TFOD-HD2
N.I.	Reprogramming Kit™, TFOD, 4 Speed Full Manual Control-Race (Transgo®)	1	88-04	T22173B	TFOD-3
VALVE BODY COMPONENTS					
N.I.	Clip, TCC Boost Valve (Superior)	1	88-04	22741CEK	N.L.
N.I.	Throttle Valve Kit (Sonnax)	1	88-04	22741NDK	N.L.
N.I.	Throttle Valve Kit O.S. (req T-F-22771-TL & T-VB-FIX) (Sonnax)	1	88-04	22741NCK	N.L.
N.I.	Plate, Universal Valve Body To Case, w/o Boost Tube	1	88-94	12747C	N.L.
N.I.	Plate, Universal Valve Body To Case, w/ Boost Tube (Exc Jeep)	1	95-04	12747EC	N.L.
N.I.	Plate, Universal Valve Body To Case, w/ Boost Tube & 4 Land Valve	1	95-04	22747C	N.L.
PUMPS					
110A	Pump, Lock-Up (2 Lugs)	1	88-92	12500C	N.L.
110A	Pump, Lock-Up (2 Flats) (Direct Drum has 1 Bushing)	1	93-94	12500CA	N.L.
110A	Pump, Lock-Up (2 Flats) (Direct Drum has 2 Bushings)	1	93-94	12500CC	N.L.
110A	Pump, Lock-Up (2 Flats) (Direct Drum has 2 Bushings)	1	95-04	12500CG	4778552

ILL.		Qty.	Year	Part #	Ref. #
PUMP COMPONENTS					
108A	Pump Gears (2 Lugs)	1	88-92	12530A	3780238
108A	Pump Gears (2 Flats)	1	93-04	12530C	N.L.
DRUMS & COMPONENTS					
128A	Direct, 4 Clutch (6.00" OD At Lugs) (1 Bushing)	1	88-89	12555	3621476
128A	Direct, 4 Clutch (6.25" OD At Lugs) (2 Bushings)	1	92-04	12555C	4531285AB
128A	Direct, 5 Clutch (6.00" OD At Lugs) (1 Bushing)	1	88-90	12555A	3743282
128A	Direct, 5 Clutch (6.25" OD At Lugs) (2 Bushings)	1	92-99	12555B	N.L.
128A	Direct, 5 Clutch	1	00-04	12555D	4617153AB
132A	Piston, Direct (Front)	1	88-04	12965A	4617154AB
154A	Forward, Lock-Up (4 Clutch, 26 Spline)	1	90-04	12554E	4186879
202B	Spring, Forward Return Spring	1	88-04	12974	4728487
264B	Reverse (No Inner Washer)	1	88-04	12556A	4637956
264B	Reverse (Inner Washer Type)	1	90-04	12556B	4637956
332C	Piston, Overdrive Direct	1	88-04	12960	4431695
448D	Clutch Hub, Overdrive (3" Tall)	1	88-04	12570	4461072
450D	Spring, Overdrive Clutch Return	1	88-04	12970	4461027
PLANETS & COMPONENTS					
228B	Ring Gear w/ Hub, Front (4.375" OD For Small Planet)	1	88-04	12592	N.L.
228B	Ring Gear w/ Hub, Front (5" OD For Large Plan) (1 Tab Washer)	1	88-04	12592A	N.L.
228B	Ring Gear w/ Hub, Front (5" OD For Large Plan) (2 Tab Washer)	1	88-04	12592B	N.L.
232B	Front, 4 Gear, Steel (Large, Sun Gear) (w/ Ring Gear)	1	88-04	12582B	3681989
252B	Rear, 4 Gear, Steel	1	88-04	12584B	N.L.
256B	Ring Gear w/ Hub, Rear	1	88-04	12594	N.L.
466D	Overdrive, 4 Gear (22 Degree Angled Teeth)	1	88-93	12580A	4874392
466D	Overdrive, 4 Gear (15 Degree Angled Teeth)	1	94-04	12580AB	4798520
466D	Overdrive, 5 Gear (22 Degree Angled Teeth)	1	88-93	12580B	4461189
466D	Overdrive, 5 Gear (15 Degree Angled Teeth)	1	94-04	12580BB	4761011
466D	Overdrive, 6 Gear	1	94-04	12580BC	5015107AA
466D	Overdrive Planet Kit, 4 Gear (15 Degree Angled Teeth)	1	94-04	12580ABK	4874392
466D	Overdrive Planet Kit, 5 Gear (15 Degree Angled Teeth)	1	88-93	12580BBK	4874396
466D	Overdrive Planet Kit, 6 Gear (15 Degree Angled Teeth)	1	88-04	12580BCK	N.L.
472D	Ring Gear, Overdrive (22 Degree Angled Teeth)	1	88-93	12590A	4461012
472D	Ring Gear, Overdrive (15 Degree Angled Teeth)	1	94-04	12590AB	4761010
SUN GEARS					
238B	Sun Gear, Front/ Rear Planet (28T / 28T)	1	88-04	12612	N.L.
238B	Sun Gear, Front/ Rear Planet (38T / 28T)	1	88-04	12612B	N.L.
462D	Sun Gear, Overdrive (22 Degree Angled Teeth)	1	88-93	12610A	4773810
462D	Sun Gear, Overdrive (15 Degree Angled Teeth)	1	94-04	12610AB	5015107AA
ONE WAY CLUTCHES					
300C	Inner Race, Rear Sprag (Slide on)	1	88-04	12664	3515618
302C	Sprag, Rear (10 Spring & Rollers)	1	1988	12654	N.L.
302C	Sprag, Rear (12 Spring & Rollers)	1	88-04	54654A	4431432
468D	Inner Race, Overdrive Sprag	1	88-04	12660	4461124
476D	Sprag, Overrun Clutch (Overdrive)	1	88-04	12650	4461015
SHELLS & SUPPORTS					
246B	Shell (Large Planet, Uses 5" OD Ring Gear) (6.375" OD At Lugs)	1	88-04	12622B	4531288
246B	Sun Gear & Shell (Large Planet) (6.125" OD At Lugs)	1	88-04	12622AK	N.L.
246B	Sun Gear & Shell (Large Planet) (6.375" OD At Lugs)	1	92-04	12622BK	N.L.
330C	Support, OD Piston Housing (Retros all w/ or w/o Governor Feed Holes)	1	88-04	12634B	4446722
330C	Support, OD Piston Housing (w/o Governor Feed Holes)	1	94-04	12634C	4617246
SHAFTS					
310C	Intermediate Shaft	1	88-04	12674	4431913
508E	Output Shaft, 2wd	1	88-04	12678E	N.L.
508E	Output Shaft, 4wd (5.250" Long) (1.125" Spline) (w/ Pilot)	1	88-04	12678G	N.L.
508E	Output Shaft, 4wd (5.250" Long) (1.875" Spline) (w/o Pilot)	1	88-04	12678GA	N.L.
508E	Output Shaft, 4wd (9.250" Long)	1	88-04	12678	N.L.

ILL.		Qty.	Year	Part #	Ref. #
VALVE BODIES & GOVERNORS					
436D	Valve Body (A500 Non LU) No Boost Valve, No Boost Tube	1	88-92	12740-6	N.L.
436D	Valve Body (A500 Lock-Up) w/ Boost Valve, w/ Boost Tube	1	92-95	12740-8	N.L.
436D	Valve Body (42RE, 44RE) w/ Small Port, Square Connector	1	94-99	12740-9	N.L.
436D	Valve Body (42RE, 44RE) w/ Large Port, Square Connector	1	95-99	12740-10	N.L.
436D	Valve Body (42RE, 44RE) w/ Small Port, Rect. Connector	1	99-04	12740-11	N.L.
436D	Valve Body (42RE, 44RE) w/ Large Port, Rect. Connector	1	99-04	12740-12	N.L.
512E	Governor w/ Support (1 Steel Sleeve)	1	88-04	12680CK	N.L.
512E	Governor w/ Support (2 Steel Sleeve)	1	88-04	12680DK	N.L.
512E	Governor w/ Support (2 Alum. Sleeve)	1	88-04	12680BK	N.L.
520E	Retainer, Governor Support	1	88-04	12697	4461002
N.I.	Governor Valve, Steel	1	90-04	A22681	N.L.
CASES/HOUSINGS & COMPONENTS					
306C	Case, 5.875" Top Bolts, 1.125" OD Case Connector, Pass. Side Starter	1	88-94	12760P	N.L.
306C	Case, 7.750" Top Bolts, 1.125" OD Case Connector, Driver Side Starter	1	88-04	12760M	N.L.
306C	Case, 7.750" Top Bolts, 15/16" OD Case Connector, Driver Side Starter	1	88-04	12760L	N.L.
444D	Pan, w/ Step In Bottom (3" Deep, Replaces All Pans)	1	88-04	12765B	4505089
524E	Extension Housing, 2wd (w/ Speed Sensor)	1	90-96	12770DA	N.L.
524E	Extension Housing, 4wd (15 7/8" Long, No Bosses)	1	97-04	12770CA	N.L.
524E	Extension Housing, 4wd (11" Long, Offset Bosses)	1	97-04	12770E	N.L.
524E	Extension Housing, 4wd (11" Long, Even Bosses)	1	97-04	12770EA	N.L.
524E	Extension Housing, 4wd (w/o Speed Sensor) (15 3/8" Long)	1	88-96	12770C	N.L.
SNAP RINGS					
N.I.	Snap Ring Kit, Overdrive Section	1	88-04	22860K	N.L.
340C	Overdrive Clutch (Front)	1	88-04	12861	4461082
350C	Overdrive Clutch (Rear .055" Waved)	1	88-04	12860	4461066
352C	Overdrive Clutch (Rear .080" Flat)	1	88-04	12862	4461065
354C	Overdrive Direct Clutch (Front Waved)	1	88-04	12864	4461032
452D	Overdrive Sun Gear (Flat)	1	88-04	12867	6033480
N.I.	Overdrive Direct Drum to Ring Gear	1	88-04	12863	4461060
MISCELLANEOUS COMPONENTS					
314C	Cooler Line Fittings (1/8" to 5/16" External Flare)	1	88-95	M462AB	N.L.
314C	Cooler Line Fittings (3/8" to 1/4" Male Fitting)	1	88-95	M462AC	N.L.
314C	Adapter, Cooler Line w/ 1/4" Fitting (Fix Cracked Case)	1	88-04	12996A	N.L.
314C	Adapter Kit, Cooler Line w/ 1/4" Fitting (Fix Cracked Case)	1	88-04	12996AK	N.L.
N.I.	Insulator, Detent Lever (Long) (Screw-in Neutral Safety Switch)	1	88-04	22993C	N.L.
N.I.	Insulator, Detent Lever (Short) (Push-in Neutral Safety Switch)	1	01-04	22993D	N.L.
SERVOS & ACCUMULATORS					
424D	Piston, Rear Servo 2.546" OD	1	88-04	12912	N.L.
424D	Piston, Rear Servo 2.545" OD	1	88-04	S12912	N.L.
N.I.	Accumulator Assembly (w/ Sleeve)	1	88-04	22925AK	N.L.
N.I.	Spring, 3-4 Accumulator (.126" Larger Than 12936K)	1	88-04	22936	N.L.
N.I.	Spring, 3-4 Accumulator .063" Wire Diameter	1	88-04	12936K	N.L.
TECHNICAL MANUALS					
N.I.	Tech Manual, A500 (42RH)	1	88-04	12400E	83-500TM
N.I.	Tech Manual, A500SE (42RE)	1	88-04	12400EA	83-500SETM
TOOLS					
N.I.	OD Piston Shim & Intermediate Shaft Spacer Gauge	1	88-04	T-1301	N.L.
N.I.	Direct Clutch Spring Compressor (HD)	1	88-04	T-1302	N.L.
N.I.	Spline Alignment Tool	1	88-04	T-1307	N.L.

Notes

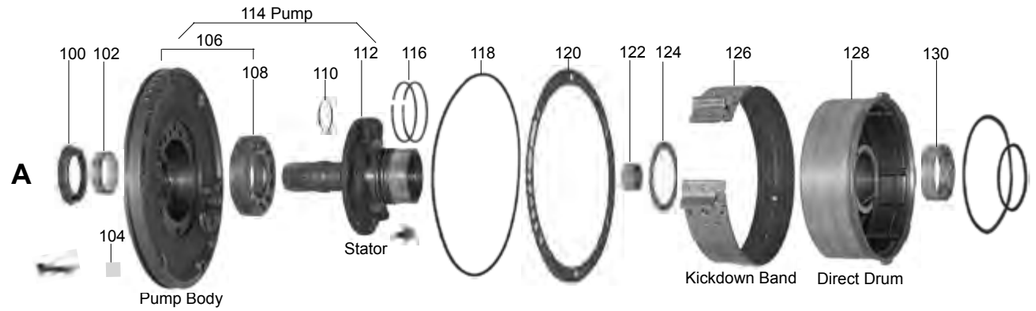
A
114 Pump
106
100 102
108
110
112
116
118
120
122 124
126
128
130
104
Stator
Pump Body
Kickdown Band
Direct Drum

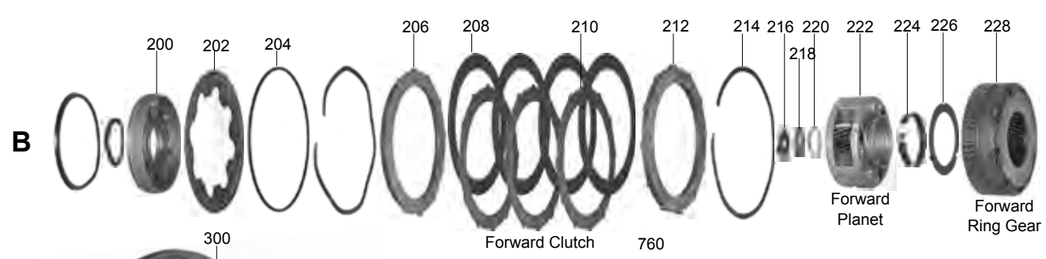
B
200
202
204
206
208
210
212
214
216
218
220
222
224
226
228
Forward Clutch
760
Forward Planet
Forward Ring Gear

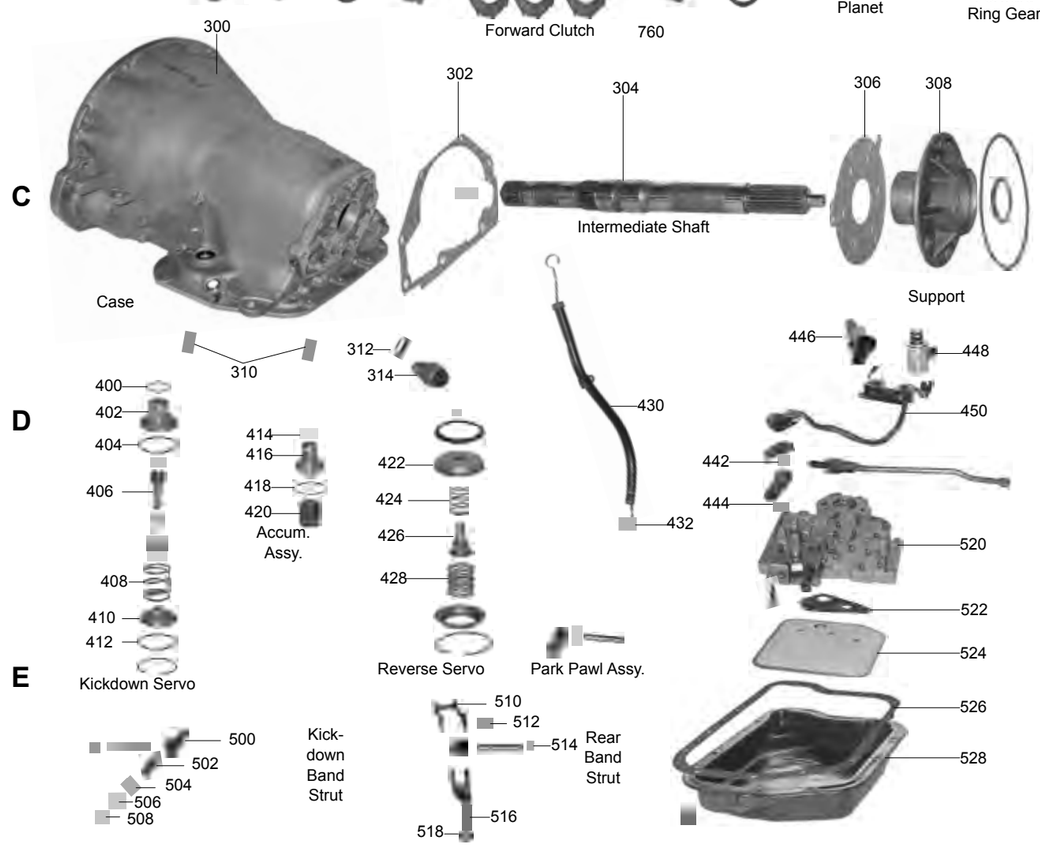
C
300
302
304
306
308
Case
Intermediate Shaft
Support
310
312
314
430
432
446
448
450
442
444
520
522
524
526
528

D
400
402
404
406
408
410
412
Kickdown Servo
414
416
418
420
Accum.
Assy.
422
424
426
428
Reverse Servo
Park Pawl Assy.

E
500
502
504
506
508
Kick-
down
Band
Strut
510
512
514
Rear
Band
Strut
516
518

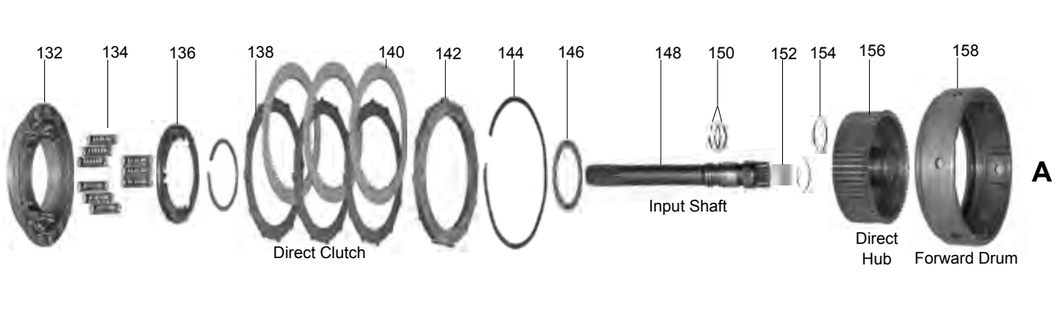
A
132
134
136
138
140
142
144
146
148
150
152
154
156
158
Direct Clutch
Input Shaft
Direct
Hub
Forward Drum


B
230
232
234
236
238
240
242
244
246
248
250
252
254
256
258
260
262
264
Shell
Sun
Gear
Rear
Planet
Rear
Ring
Gear
Reverse
Band
Reverse
Drum

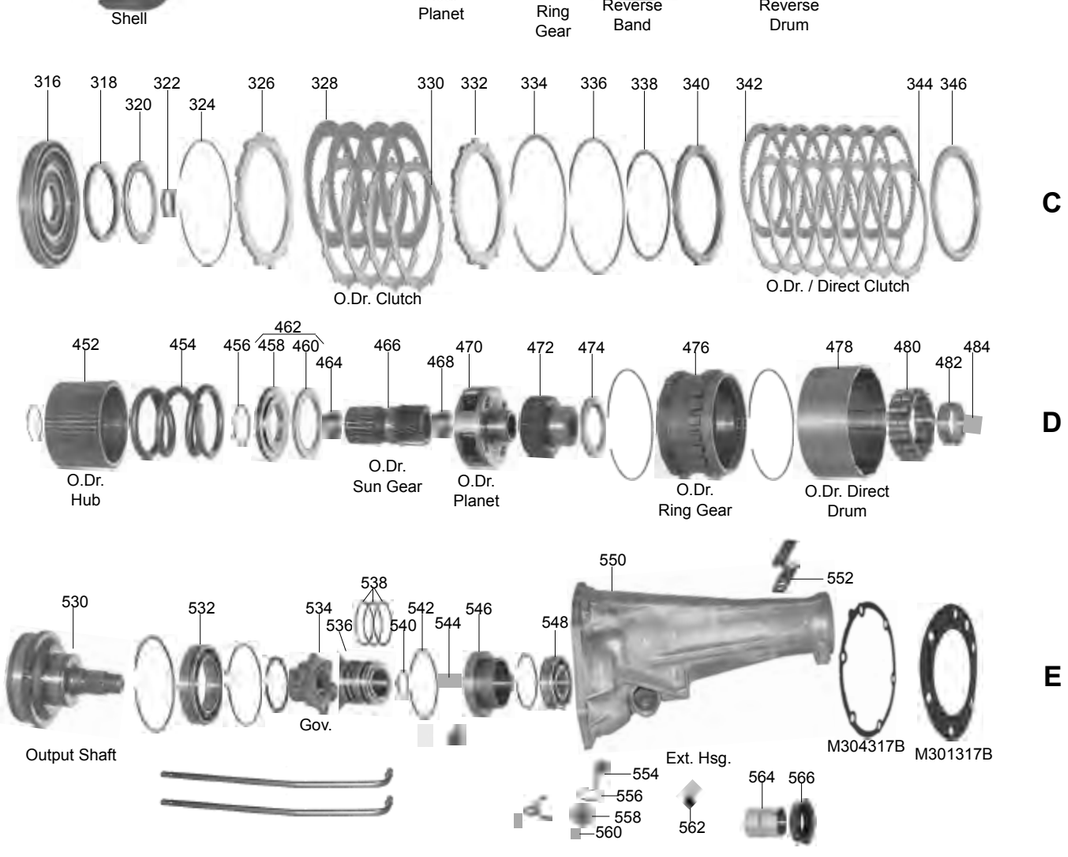
C
316
318
320
322
324
326
328
330
332
334
336
338
340
342
344
346
O.Dr. Clutch
O.Dr. / Direct Clutch

D
452
454
456
458
460
462
464
466
468
470
472
474
476
478
480
482
484
O.Dr.
Hub
O.Dr.
Sun Gear
O.Dr.
Planet
O.Dr.
Ring Gear
O.Dr. Direct
Drum

E
530
532
534
536
538
540
542
544
546
548
550
552
Output Shaft
Gov.
Ext. Hsg.
554
556
558
560
562
564
566
M304317B
M301317B

46RH, 46RE, 47RH, 47RE, 48RE (A518, A618)

ILL.		Qty.	Year	Part #	Ref. #
DELUXE KITS (SUPER KITS WITH STEELS)					
N.I.	A518 (46RH, 46RE)	1	90-97	22008E	N.L.
N.I.	A518 (46RH, 46RE)	1	98-03	22008G	N.L.
N.I.	A618 (47RH, 47RE)	1	94-97	22008EA	N.L.
N.I.	A618 (47RH, 47RE)	1	98-02	22008GA	N.L.
N.I.	48RE	1	03-Up	22008HW	N.L.
MASTER OVERHAUL KITS (WITH STEELS)					
N.I.	A518 (46RH, 46RE)	1	90-97	22006E	N.L.
N.I.	A518 (46RH, 46RE)	1	98-03	22006G	N.L.
N.I.	A618 (47RH, 47RE)	1	94-97	22006EA	N.L.
N.I.	A618 (47RH, 47RE)	1	98-02	22006GA	N.L.
N.I.	48RE	1	03-Up	22006HW	N.L.
MASTER OVERHAUL KITS (LESS STEELS)					
N.I.	A518 (46RH, 46RE), A618 (47RH, 47RE)	1	90-97	22004E	N.L.
N.I.	A518 (46RH, 46RE), A618 (47RH, 47RE)	1	98-03	22004G	N.L.
N.I.	48RE	1	03-Up	22004HW	N.L.
OVERHAUL KITS (WITH RINGS AND SEALS)					
N.I.	A518 (46RH, 46RE), A618 (47RH, 47RE)	1	90-03	22002E	N.L.
N.I.	48RE	1	03-Up	22002HW	N.L.
GASKETS & O-RINGS					
104A	Gasket, Pump Bolt Washers	6	90-Up	44309	MD707653
118A	O-Ring, Front Pump	1	90-Up	22311	1942021
120A	Gasket, Pump	1	90-Up	22310	4028377
302C	Gasket, Extension Housing to Case (A518)	1	90-Up	12305AF	4531192
306C	Gasket, Overdrive Piston Retainer to Case	1	90-Up	12305D	4531191
432D	Boot, Filler Tube	1	97-Up	12371	52118629
442D	Seal, Throttle Lever Shaft	1	90-Up	12349	2466548
514E	O-Ring, Reverse Band Lever Shaft	1	90-Up	44380	1672358
526E	Gasket, Pan	1	90-Up	22300	2464324
526E	Gasket, Pan (Bonded)	1	02-Up	22300W	2464324AC
552E	Gasket, Output Shaft Bearing Cover	1	90-Up	12305J	2801398
556E	O-Ring, Speed-O Housing (Red)	1	90-Up	12368	6031370
N.I.	Gasket, Solenoid	1	90-Up	12328A	4446194
N.I.	Gasket, Governor Solenoid Body	1	90-Up	12328B	N.L.
N.I.	O-Ring, Electric Connector (15/16" Connector)	2	90-Up	12347	N.L.
METAL CLAD SEALS					
100A	Front Pump	1	90-Up	22070	4531225
444D	Manual Shaft (.250" Thick)	1	90-Up	22072	2466842
444D	Manual Shaft (.357" Thick)	1	90-Up	22072A	2466842
566E	Rear (w/o Boot)	1	90-Up	36074	C3AZ-7052A
566E	Rear (w/ Boot)	1	90-Up	36074B	C1DP-7052A
566E	Rear w/ Bolt on Yoke (48RE)	1	03-Up	22074B	52854126AA
566E	Transfer Case Adapter (4wd)	1	90-Up	12074J	4269956
SEALING RINGS & KITS					
N.I.	Ring Kit (518)	1	90-Up	22175EK	N.L.
N.I.	Ring Kit, 1-2 Accumulator (Viton D-Rings)	1	90-Up	12191K	N.L.
110A	Stator Shaft (Front) (48RE)	1	03-Up	22178	N.L.
116A	Stator Shaft (Rear) (Teflon)	2	90-Up	22179T	3515321
116A	Stator Shaft (Rear) (Seal Plated)	2	90-Up	22179B	3743689
150A	Input Shaft 1.175" OD (Metal)	2	90-93	22177A	2801054
150A	Input Shaft 1.245" OD (Metal)	2	94-Up	22177E	4741836
150A	Input Shaft 1.245" OD (Plastic w/ Step Joint)	2	94-Up	22177H	N.L.
154A	Forward Drum 1.875" OD (Metal)	1	90-Up	22181	4058443
538E	Governor Support (A518)	2-3	90-Up	12189B	4461011
FRICTION PLATES					
140A	Direct (.095")	2-4	90-97	22106	2801167
140A	Direct (.085") (Hi-Energy) (98-Up)	3-5	98-Up	22106B	4617201AC
140A	Direct (.095") (Hi-Energy) (90-97)	2-4	90-97	22106A	4617202
140A	Direct (.061") (High Performance)	2-4	90-97	22108HP	N.L.
140A	Direct (.095") (High Performance)	2-4	90-97	22106HP	N.L.

46RH, 46RE, 47RH, 47RE, 48RE (A518, A618)

ILL.		Qty.	Year	Part #	Ref. #
FRICTION PLATES (Cont.)					
140A	Direct (.085") (High Performance)	3-5	98-Up	22106BHP	N.L.
208B	Forward (58T) (exc 48RE)	4	90-Up	22108	2801992
208B	Forward (58T) (exc 48RE) (Hi-Energy)	4	98-Up	22108A	2801992AB
208B	Forward (58T) (exc 48RE) (High Performance)	4	90-Up	22108HP	N.L.
208B	Forward (92T) (48RE) (Hi-Energy)	4	03-Up	22108B	52854030AA
208B	Forward (92T) (48RE) (High Performance)	4	03-Up	22108BHP	N.L.
328C	Overdrive Brake (Waved) (Hi-Energy)	4-6	90-Up	12100B	4461162
342C	Overdrive Direct	6-10	90-Up	12102	4461042
STEEL PLATES					
138A	Direct (.070")	3	90-Up	22126	52118812AA
138A	Direct (.070") (Kolene)	3	90-Up	22126K	28701K
138A	Direct (.085") (Oversized)	AR	90-Up	22126X	2124826AB
138A	Direct (.085") (Oversized) (Kolene)	AR	90-Up	22126XK	2124826AB
210B	Forward (.070")	4	90-Up	22126	52118812AA
210B	Forward (.070") (Kolene)	4	90-Up	22126K	28701K
210B	Forward (.085") (Oversized)	AR	90-Up	22126X	2124826AB
210B	Forward (.085") (Oversized) (Kolene)	AR	90-Up	22126XK	2124826AB
330C	Overdrive Brake (.068")	3-6	90-Up	12120	4461047
330C	Overdrive Brake (.068") (Kolene)	3-6	90-Up	12120K	4461047
344C	Overdrive Direct (.054")	5-9	90-Up	12122A	4864053
344C	Overdrive Direct (.054") (Kolene)	5-9	90-Up	12122AK	4864053
344C	Overdrive Direct (.069")	5-7	90-Up	12122	4461054
N.I.	Steel Module, A518	1	90-97	22139E	N.L.
N.I.	Steel Module, A518	1	98-Up	22139G	N.L.
N.I.	Steel Module, A618	1	90-97	22139EA	N.L.
N.I.	Steel Module, A618	1	98-Up	22139GA	N.L.
N.I.	Steel Module, 48RE	1	03-Up	22139H	N.L.
PRESSURE PLATES					
142A	Direct (Top)	1	90-Up	22146	4617567
142A	Forward (Top)	1	90-Up	22146	4617567
206B	Forward (Bottom) (Beveled)	1	90-Up	22149	2466803
326C	Overdrive Brake (Front)	1	90-Up	12140	4461048
332C	Overdrive Brake (Rear) .215"	1	90-Up	12141	4461033
340C	Overdrive Direct (.085" Stepped to .215")	1	90-Up	22142	4461183
340C	Overdrive Direct (Front)	1	90-Up	12142	4461031
346C	Overdrive Direct (Rear)	1	90-Up	12143	4461030
FILTERS					
524E	Large Dacron	1	90-97	12010C	3515996
524E	Large Brass	1	90-97	12010D	3515996
524E	Plastic & Metal	1	98-Up	12010J	52118789
N.I.	Screen, Governor	1	90-Up	12014	3743519
N.I.	Screen, Valve Body Feed	1	90-Up	12018	3878313
N.I.	Screen & Orifice, Overdrive	1	90-Up	12484	4412583
FILTER KITS					
N.I.	Filter Kit, Dacron	1	90-97	12011G	12011GF
N.I.	Filter Kit, Plastic & Metal	1	98-Up	12011J	12011JF
BANDS					
126A	Kickdown Flex	1	90-Up	22022A	3681105
126A	Kickdown Flex (Kevlar)	1	90-Up	22022AK	3681105
126A	Kickdown Flex (High Performance)	1	90-Up	22022C	N.L.
126A	Kickdown Rigid	1	90-Up	22022B	2124342
126A	Kickdown Split Band Wide (Heavy Duty)	1	90-Up	22022H	2124342
250B	Reverse (6" Drum) Solid (A518, 46RH, 46RE)	1	90-E91	22024A	4505091
250B	Reverse (6.250" Drum) Solid (A518, 46RH, 46RE)	1	L91-Up	22024B	4471476AB
250B	Reverse (6.250" Drum) Double Wrap (A618, 47RH, 47RE, 48RE)	1	94-Up	22024C	4531231
BUSHINGS					
N.I.	Bushing Kit (w/o OD Bushings)	1	90-93	22030B	N.L.
N.I.	Bushing Kit (w/o OD Bushings)	1	94-Up	22030BA	N.L.
N.I.	Bushing Kit (OD Bushings Only)	1	90-Up	12030E	N.L.
102A	Pump (Babbitt)	1	90-Up	22034	2466324

46RH, 46RE, 47RH, 47RE, 48RE (A518, A618)

ILL.		Qty.	Year	Part #	Ref. #
BUSHINGS (Cont.)					
102A	Pump (Bronze)	1	90-Up	22034A	2466324
102A	Pump (w/ Ball Indented Oil Packets)	1	90-Up	22034B	4531163
122A	Stator (Rear) (1.125" ID)	1	90-95	22037B	2801348
122A	Stator (Rear) (1.250" ID)	1	96-Up	22037C	4617416
130A	Direct Drum	1	90-Up	22046C	4058647
224B	Front Planet (used w/ Steel Planets (Plastic) (.370" Wide)	1	96-Up	22053E	4617951
224B	Front Planet (used w/ Steel Planets (Plastic) (.300" Wide)	1	03-Up	22053EA	52854038AA
234B	Sun Gear (.500" Wide) (Front & Rear)	1	90-Up	22052	1736520
234B	Sun Gear (.750" Wide) (Rear)	1	90-Up	22052A	2464381
464D	Overdrive Sun Gear (Front)	1	90-93	12040	4461025
464D	Overdrive Sun Gear (Front) w/ Flange	1	94-E99	12040A	N.L.
464D	Overdrive Sun Gear (Front)	1	99-Up	12040B	5015107AA
468D	Overdrive Sun Gear (Rear)	1	90-Up	12040	4461025
482D	Output Shaft Large (2.144" ID)	1	90-Up	12062	4461006
484D	Output Shaft Small Pilot (.605" ID)	1	90-Up	12062B	4461007
564E	Extension Housing (exc 48RE)	1	90-Up	36066	B5AZ-7A034A
564E	Extension Housing (48RE)	1	03-Up	22066	N.L.
THRUST WASHERS/BEARINGS					
WASHERS					
N.I.	Washer Kit (A518 exc 48RE)	1	90-Up	22200E	N.L.
N.I.	Washer Kit (48RE)	1	03-Up	22200	N.L.
N.I.	Shim Kit, End Play (Includes 3 Each of .015" & .025" Shims)	1	90-Up	22232K	N.L.
124A	Stator/Direct Drum (.043")	1	90-Up	22211	2204621
124A	Stator/Direct Drum (.061")	1	90-Up	22211A	2204622
124A	Stator/Direct Drum (.084")	1	90-Up	22211B	2204623
124A	Stator/Direct Drum (.102")	1	90-Up	22211C	2400284
218B	Output Shaft 3 Tab .052" (Gray)	1	90-Up	12233D	4505185
218B	Output Shaft 3 Tab .068" (Red)	1	90-Up	12233DA	4505186
218B	Output Shaft 3 Tab .083" (Green)	1	90-Up	12233DB	4505187
226B	3 Gear Planet (3 Tab)	2-4	90-Up	22238	1942081
226B	4 Gear Planet (4 Tab) (2.25" ID)	2-4	94-Up	22238B	4617888
226B	4 Gear Planet (4 Tab) (2.50" ID)	2-4	90-Up	22238A	2801060
226B	5 Gear Planet (5 Tab)	2-4	90-Up	22238D	4539129
230B	6 Gear Planet (6 Tab) (Front) (48RE)	1-2	03-Up	22238	52854039AA
242B	6 Gear Planet (6 Tab) (Rear) (48RE)	1-2	03-Up	22238G	52854076AA
242B	Shell to Rear Planet (6 Tab)	1	96-03	22238E	4618000
252B	Rear Band Drum (2 Tab)	1	90-Up	22254A	52118059
318C	Overdrive Piston to Hub (.124")	1	90-Up	12213A	4431585
318C	Overdrive Piston to Hub (.155")	1	90-Up	12213C	4431586
318C	Overdrive Piston to Hub (.184")	1	90-Up	12213E	4431587
318C	Overdrive Piston to Hub (.213")	1	90-Up	12213G	4431588
318C	Overdrive Piston to Hub (.228")	1	90-Up	12213H	4431734
BEARINGS					
N.I.	Bearing Kit (All)	1	90-Up	22201A	N.L.
216B	Race, Output Shaft	1	90-Up	12232A	4505188
320C	Bearing, Overdrive Piston to Hub	1	90-Up	12214	4446724
322C	Spacer, Intermediate Shaft to Overdrive Planet (.158")	1	90-Up	12215	4431916
322C	Spacer, Intermediate Shaft to Overdrive Planet (.175")	1	90-Up	12215A	4431917
322C	Spacer, Intermediate Shaft to Overdrive Planet (.193")	1	90-Up	12215B	4431918
322C	Spacer, Intermediate Shaft to Overdrive Planet (.211")	1	90-Up	12215C	4431919
460D	Bearing & Race, Overdrive Planet to Hub (Update)	1	90-Up	12220	4740774
462D	Bearing, Overdrive Planet to Hub (3.853" OD)	1	90-Up	12221A	4461126
474D	Bearing, Overdrive Inner Sprag Race to Output Shaft (3.210" OD)	1	90-Up	12222	4461014
532E	Bearing, Output Shaft (Front) (2.750" ID)	1	90-Up	12271	4461008
548E	Bearing, Output Shaft (Rear) (1.375" ID)	1	90-Up	22272A	2466224
548E	Bearing, Output Shaft (w/ Bolt-On Yoke)	1	90-Up	22272B	1672194
N.I.	Bearing, Case Repair (Sonnax)	1	90-Up	S22257	22556-BRG
N.I.	Shim Kit, Overdrive Set Up	1	90-Up	12213K	12783-01K
N.I.	Shim Kit, End Play (Includes 3 Each of .015" & .025" Shims)	1	90-Up	22232K	N.L.

46RH, 46RE, 47RH, 47RE, 48RE (A518, A618)

ILL.		Qty.	Year	Part #	Ref. #
ELECTRICAL COMPONENTS					
314C	Neutral Safety Switch (3 Prong Short)	1	90-97	12410A	4057750
314C	Neutral Safety Switch (3 Prong Long)	1	98-03	12410C	56028181AB
314C	Neutral Safety Switch (5 Prong Push-in)	1	01-Up	12410D	56045489AB
314C	Neutral Safety Switch MLPS Adapter (Late to Early Case)	1	90-Up	22761S	N.L.
446D	Sensor, Governor Pressure (4 Pin) (Transducer) (Round Connector)	1	96-00	12415B	56027720
446D	Sensor, Governor Pressure (4 Pin) (Transducer) (Rectangular Connector)	1	00-Up	12415C	56028196AD
448D	Solenoid, Governor Pressure	1	96-Up	12432A	4617210
448D	Repair Kit, Governor Solenoid w/ Tool Kits (Transgo®) Will Repair 6 Units	1	95-05	T12432RK	N.L.
450D	Solenoid, Overdrive (Single) (No TCC)	1	90-95	22420	4531253
450D	Solenoid, OD/TCC (Dual) (3 Pin Case Connector)	1	90-95	12420	4431954
450D	Solenoid, OD/TCC (Dual) (8 Pin Round & 4 Pin Oval Connector)	1	96-99	12420B	52118500
450D	Solenoid, OD/TCC (Dual) (8 Pin Round & 4 Pin Rect Connector)	1	00-Up	12420C	52118500AB
562E	Sensor, Output Speed Sensor (VSS) (A518ES, 46RE, 47RE)	1	97-Up	92436	4800879
N.I.	Electronic Throttle Valve Actuator (Dodge 48RE 5.9L)	1	05-Up	22440	53041140-AB
N.I.	Repair Kit, Harness (Solenoid)	1	94-04	12445BK	N.L.
N.I.	Repair Kit, Harness (Neutral Safety Switch)	1	90-04	12445CK	4209695
N.I.	Noise Suppressor, TPS Signal (46RE, 47RE Diesels)	1	96-02	22448	N.L.
VALVE BODY RECALIBRATION KITS					
N.I.	Shift Kit® (Diesel) (OD exc 48RE) (Transgo®)	1	90-03	T22165B	SK® TFOD-D
N.I.	Shift Kit® (Diesel) (48RE) (incl 2003 w/ V10) (Transgo®)	1	03-10	T22165C	SK® 48RE
N.I.	Shift Kit®, Jr. (Gas) (Transgo®)	1	90-02	T22167	SK® TFOD-JR
N.I.	Shift Correction Kit, A518, A618 (Gas & Diesel) (Superior)	1	90-98	S22167	K500-618
N.I.	Shift Correction Kit, A518, A618 (Gas & Diesel) (Superior)	1	99-04	S22167A	K500-618-L
N.I.	Valve Body Kit (48RE) w/ Electronic Throttle Actuator (Superior)	1	03-Up	S22167C	K48RE
N.I.	Reprogramming Kit™, A518, A618, HD & Hi-Perf (Transgo®)	1	90-02	T22169B	TFOD-HD2
N.I.	Reprogramming Kit™, A518, A618, Full Manual Control-Race (Transgo®)	1	90-02	T22173B	TFOD-3
VALVE BODY COMPONENTS					
N.I.	Plate, Universal VB to Case (Gas & Diesel) (48RE Only)	1	03-Up	22747D	N.L.
N.I.	Plate, Universal VB to Case w/ Lock-Up Boost Tube (exc 48RE)	1	93-04	22747C	N.L.
N.I.	Plate, Universal VB to Case, w/o Lock-Up Boost Tube	1	90-97	22747CA	N.L.
N.I.	Clip, TCC Boost Valve	1	90-Up	22741EK	N.L.
N.I.	Valve & Plunger, Throttle (No Stick Steel Replaces Aluminum)	1	90-Up	22741NK	N.L.
PUMPS					
114A	Pump, Non Lock-Up (1.125" ID Rear Stator Bushing)	1	90-93	22500B	4728912
114A	Pump, Non Lock-Up (1.250" ID Rear Stator Bushing)	1	94-02	22500BA	4796469AD
114A	Pump, Lock-Up (3 Check Balls) (14T/15T)	1	90-93	22500C	472862AB
114A	Pump, Lock-Up (3 Check Balls) (11T/12T)	1	94-02	22500CA	4796467AC
114A	Pump, Lock-Up (48RE)	1	03-Up	22500G	5086715AB
PUMP COMPONENTS					
108A	Pump Gears (14T/15T)	1	90-Up	22530	N.L.
108A	Pump Gears (11T/12T)	1	90-Up	22530C	N.L.
108A	Pump Gears (11T/12T) (Oversized)	1	90-Up	22530CA	N.L.
108A	Pump Gears (10T/11T)	1	94-Up	22530D	N.L.
108A	Pump Gears (10T/11T) (Oversized)	1	94-Up	22530DA	N.L.
DRUMS & COMPONENTS					
128A	Direct (Front Clutch) 3 Clutch	1	90-Up	22555A	4058437
128A	Direct (Front Clutch) 4 Clutch	1	90-Up	22555B	4058648
128A	Direct (Front Clutch) 5 Clutch	1	03-Up	22555G	52854149A
156A	Clutch Hub w/ Input (Non Lock-Up)	1	94-02	22575BBK	N.L.
156A	Clutch Hub w/ Input (Lock-Up)	1	94-Up	22575CK	N.L.
158A	Forward (Rear Clutch Retainer)	1	90-Up	22554	N.L.
202B	Spring, Forward Clutch Disc Spring (Only Fits 74-E00) (Narrow Notch)	1	90-E00	22974B	3743621
202B	Spring, Forward Clutch Disc Spring (Does Not Fit 74-E00) (Wide Notch)	1	L00-Up	22974A	1942015
204B	Cushion Spacer, Rear Clutch Spring Spacer (Plastic)	1	90-Up	22853	3515077
254B	Reverse (Slide on Race, 12 Roller) (Washer Design)	1	90-91	22556A	4505095
254B	Reverse, 14 Roller (Press on Race) (6.250" OD w/o Lip)	1	90-Up	22556AB	4531242
254B	Reverse, 14 Roller (Press on Race) (6.250" OD w/ Lip)	1	90-Up	22556AC	52118057
316C	Piston, Overdrive Direct Clutch	1	90-Up	12960	4431695
452D	Clutch Hub, Overdrive Clutch	1	90-Up	12570	4461072
454D	Spring, Overdrive Direct Apply	1	90-Up	12970	4461027
478D	Overdrive (6 Clutch)	1	90-Up	12551A	4401040
478D	Overdrive (8 Clutch)	1	90-Up	22551B	4461089

46RH, 46RE, 47RH, 47RE, 48RE (A518, A618)

ILL.		Qty.	Year	Part #	Ref. #
PLANETS & COMPONENTS					
222B	Front (3 Gear)	1	90-93	22582A	4028110
222B	Front (4 Gear)	1	94-Up	22582CA	N.L.
222B	Front (5 Gear)	1	94-Up	22582E	4617998
222B	Front (6 Gear) (48RE)	1	03-Up	22582G	52854137AA
228B	Ring Gear, Front Planet (58T)	1	90-02	22592	2892656
228B	Ring Gear, Front Planet (48RE)	1	03-Up	22592A	52854043AA
244B	Rear (3 Gear)	1	90-Up	22584	2466539
244B	Rear (4 Gear)	1	90-Up	22584A	2801061
244B	Rear, 6 Gear (Steel) (48RE)	1	03-Up	22584B	52854140AA
248B	Ring Gear, Rear Planet	1	90-02	22594	2538185
248B	Ring Gear, Rear Planet (48RE)	1	03-Up	22594A	52854074AA
470D	Overdrive, 4 Gear (22 Degree Angled Teeth)	1	90-93	12580A	4874392
470D	Overdrive, 4 Gear (15 Degree Angled Teeth)	1	94-Up	12580AB	4798520
470D	Overdrive, 5 Gear (22 Degree Angled Teeth)	1	90-Up	12580B	4461189
470D	Overdrive, 5 Gear (15 Degree Angled Teeth)	1	90-Up	12580BB	4761011
470D	Overdrive, 6 Gear (15 Degree Angled Teeth)	1	90-Up	12580BC	5015107AA
470D	Overdrive Planet Kit, 5 Gear	1	90-Up	12580BBK	4874396
470D	Overdrive Planet Kit, 6 Gear	1	90-Up	12580BCK	N.L.
476D	Ring Gear, Overdrive Planet (15 Degree Angled Teeth)	1	94-Up	12590AB	4761010
476D	Ring Gear, Overdrive Planet (15 Degree Angled Teeth) (48RE)	1	03-Up	22590C	5093157AA
SUN GEARS					
236B	Sun Gear, Front & Rear Planet	1	90-02	22612	2801311
236B	Sun Gear, Front & Rear Planet	1	03-Up	22612B	N.L.
466D	Sun Gear, Overdrive (22 Degree Angled Teeth)	1	90-93	12610A	4773810
466D	Sun Gear, Overdrive (15 Degree Angled Teeth)	1	94-Up	12610AB	5015107AA
ONE WAY CLUTCHES					
258B	Sprag, Rear Spring & Roller Kits (14 Roller)	1	90-Up	22654A	4617199
260B	Outer Race Kit, Bolt-In Cam (6 Bolt) (req T-518-ERT or T-518-PRT)	1	L90-Up	22665AK	N.L.
472D	Inner Race, Overdrive Sprag	1	90-Up	12660	4461124
480D	Sprag, Overrun Clutch (Overdrive)	1	90-Up	12650	4461015
SHELLS & SUPPORTS					
232B	Shell, Driving (Uses 6 Tab Washer)	1	90-02	22622A	N.L.
232B	Shell, Driving (48RE)	1	03-Up	22622B	52854056AA
308C	Support, OD Piston Housing (w/ or w/o Governor Feed Holes)	1	90-Up	22634B	52118180
SHAFTS					
148A	Input Shaft (23 Spline) (A518)	1	90-Up	22670BA	N.L.
148A	Input Shaft (23 Spline) (A618)	1	94-Up	22670BB	N.L.
304C	Intermediate Shaft	1	90-93	22674	4471504
304C	Intermediate Shaft (47RE, 48RE)	1	94-Up	22674A	4617611
530E	Output Shaft, 2wd	1	90-Up	12678E	N.L.
530E	Output Shaft, 2wd (16.250") (No Keyway Slot) A618	1	96-Up	22678BA	N.L.
530E	Output Shaft, 2wd (48RE)	1	03-Up	22678L	N.L.
530E	Output Shaft, 4wd (5.250" Long) (w/ Pilot on Transfer Case End)	1	90-Up	12678G	N.L.
530E	Output Shaft, 4wd (5.250" Long) (No Pilot on Transfer Case End)	1	90-Up	12678GA	N.L.
530E	Output Shaft, 4wd (9.250" Long)	1	90-Up	12678	N.L.
530E	Output Shaft, HD (4wd) (Hydraulic Exc 47RH)	1	90-93	22678DHD	N.L.
530E	Output Shaft, HD (4wd) (Hydraulic 47RH)	1	94-03	22678EHD	N.L.
530E	Output Shaft, HD (4wd) (RE Units)	1	90-Up	22678FHD	N.L.
530E	Output Shaft, 4wd (48RE)	1	03-Up	22678M	N.L.
VALVE BODIES & GOVERNORS					
520E	Valve Body (A518, 46RH, 47RH) (Non Lock-Up)	1	90-Up	22740-3	N.L.
520E	Valve Body (A518, 46RH, 47RH) (Lock-Up)	1	90-99	22740-5	N.L.
520E	Valve Body (46RE, 47RE) (w/ Square Connector, Small Port)	1	95-99	22740-6	N.L.
520E	Valve Body (46RE, 47RE) (w/ Square Connector, Large Port)	1	95-99	22740-7	N.L.
520E	Valve Body (46RE, 47RE) (w/ Rect. Connector, Small Port)	1	00-Up	22740-1	N.L.
520E	Valve Body (46RE, 47RE) (w/ Rect. Connector, Large Port)	1	00-Up	22740-2	N.L.
520E	Valve Body (48RE)	1	03-Up	22740-12	N.L.
534E	Governor, Diesel (Large Valve 1.070" OD) Single Pin	1	90-Up	22680BA	N.L.
546E	Retainer, Governor Support	1	90-Up	12697	4461002
N.I.	Governor Valve, Steel	1	90-Up	22681	N.L.

46RH, 46RE, 47RH, 47RE, 48RE (A518, A618)

ILL.		Qty.	Year	Part #	Ref. #
CASES/HOUSINGS & COMPONENTS					
300C	Case (14 Roller Sprag) (Gas) (.875" OD Case Connector)	1	90-Up	22760R	N.L.
300C	Case (14 Roller Sprag) (Gas) (1.125" OD Case Connector)	1	90-Up	22760RA	N.L.
300C	Case (14 Roller Sprag) (A518 Diesel) (2.812" OD Rear Servo)	1	90-Up	22760S	N.L.
300C	Case (14 Roller Sprag) (A618 Diesel) (2.479" OD Rear Servo)	1	90-Up	22760SA	N.L.
300C	Case (48RE) (w/ Throttle Actuator Motor Bosses)	1	05-Up	22760SC	N.L.
528E	Pan (3.150" Deep)	1	90-Up	22765B	52118779AD
550E	Extension Housing, 2wd (48RE)	1	03-Up	22770G	N.L.
550E	Extension Housing, 4wd (15 7/8" Long, No Bosses)	1	97-Up	12770CA	N.L.
550E	Extension Housing, 4wd (11" Long, 2 Offset Bosses)	1	97-Up	12770E	N.L.
550E	Extension Housing, 4wd (11" Long, 4 Even Bosses)	1	97-Up	12770EA	N.L.
550E	Extension Housing, 4wd (16" Long)	1	90-93	12770BB	N.L.
550E	Extension Housing, 4wd (48RE)	1	03-Up	22770GA	N.L.
SNAP RINGS					
N.I.	Snap Ring Kit, Overdrive Section	1	90-Up	22860K	N.L.
214B	Forward & Direct Clutch (.062")	1	90-Up	22878	1942063
214B	Forward & Direct Clutch (.074")	1	90-Up	22878A	1942064
214B	Forward & Direct Clutch (.088")	1	90-Up	22878B	1942065
214B	Forward & Direct Clutch (.106")	1	90-Up	22878C	2766811
220B	Holds Front Planet to Output Shaft	1	90-Up	22894	N.L.
324C	Overdrive Clutch (Front)	1	90-Up	12861	4461082
328C	Overdrive Direct Clutch (Front Waved)	1	90-Up	12864	4461032
334C	Overdrive Clutch (Rear .055" Waved)	1	90-Up	12860	4461066
336C	Overdrive Clutch (Rear .080" Flat)	1	90-Up	12862	4461065
338C	Overdrive Direct Drum to Ring Gear	2	90-Up	12863	4461060
456D	Overdrive Sun Gear (Flat)	1	90-Up	12867	6033480
MISCELLANEOUS COMPONENTS					
310C	Cooler Line Fitting, 3/8" Tubing (Push In Type)	1	90-Up	22996A	52028629
310C	Cooler Line Fitting, 1/2" Tubing (Quick Connect Type)	1	90-Up	22996B	4897792AA
310C	Cooler Line Fitting, 1/2" Tubing (Flare)	1	90-Up	22996C	52028764AA
502E	Strut, Front Band Assembly (Apply Side)	1	90-Up	22916	N.L.
502E	Strut, Front Band (Apply Side) (Reinforced)	1	90-Up	22916-2	N.L.
504E	Strut, Band Anchor (Power Wedge)	1	90-Up	22915-3	N.L.
512E	Band Strut, Oversized (.100 Longer) (For Resurfaced Drums)	1	90-Up	22917B	N.L.
512E	Band Strut, Oversized (.150" Longer) (For Resurfaced Drums)	1	90-Up	22917BA	N.L.
N.I.	Insulator, Detent Lever (Screw In Neutral Switch)	1	90-Up	22993C	N.L.
N.I.	Insulator, Detent Lever (Push In Neutral Switch)	1	01-Up	22993D	N.L.
SERVOS & ACCUMULATORS					
410D	Cover, Front Servo w/ O-Ring	1	90-Up	22909C	N.L.
416D	Piston, Accumulator (In Case)	1	90-Up	22927	N.L.
420D	Spring, 1-2 Accumulator Return	1	90-Up	22926	N.L.
422D	Piston, A518 Rear Servo (2.812" OD)	1	90-Up	22912	N.L.
422D	Piston, A618 Rear Servo (2.479" OD)	1	90-Up	22912A	N.L.
N.I.	Servo Assembly, Kickdown	1	90-Up	22905	N.L.
N.I.	Piston Kit, HD 2nd & Accum (Billet Pistons, Quick Ratio Band Lever)	1	90-Up	22905DK	N.L.
N.I.	Spring, 3-4 Accumulator .126" Wire Diameter (Inside Valve Body)	1	90-Up	22936	N.L.
N.I.	Spring, 3-4 Accumulator .063" Wire Diameter (Inside Valve Body)	1	90-Up	12936K	N.L.
TECHNICAL MANUALS					
N.I.	Tech Manual	1	90-Up	12400	83-727904TM
N.I.	Tech Manual, A518, 618	1	90-Up	12400E	83-500TM
N.I.	Tech Manual, 46RE, 47RE, 48RE	1	96-Up	22400E	46/47/48RE

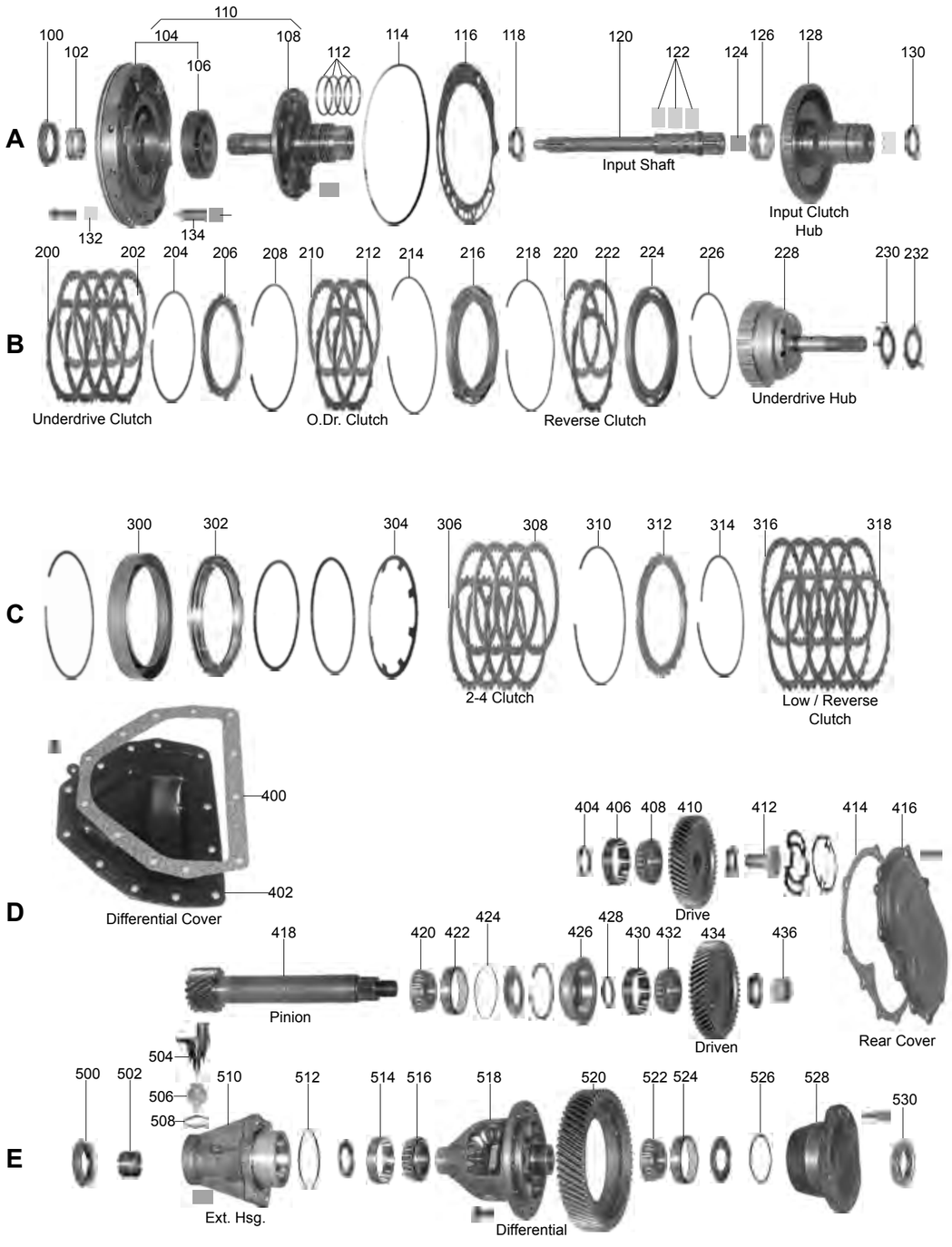
A
B
C
D
E
Input Shaft
Input Clutch Hub
Underdrive Clutch
O.Dr. Clutch
Reverse Clutch
Underdrive Hub
2-4 Clutch
Low / Reverse Clutch
Differential Cover
Drive
Pinion
Driven
Rear Cover
Ext. Hsg.
Differential

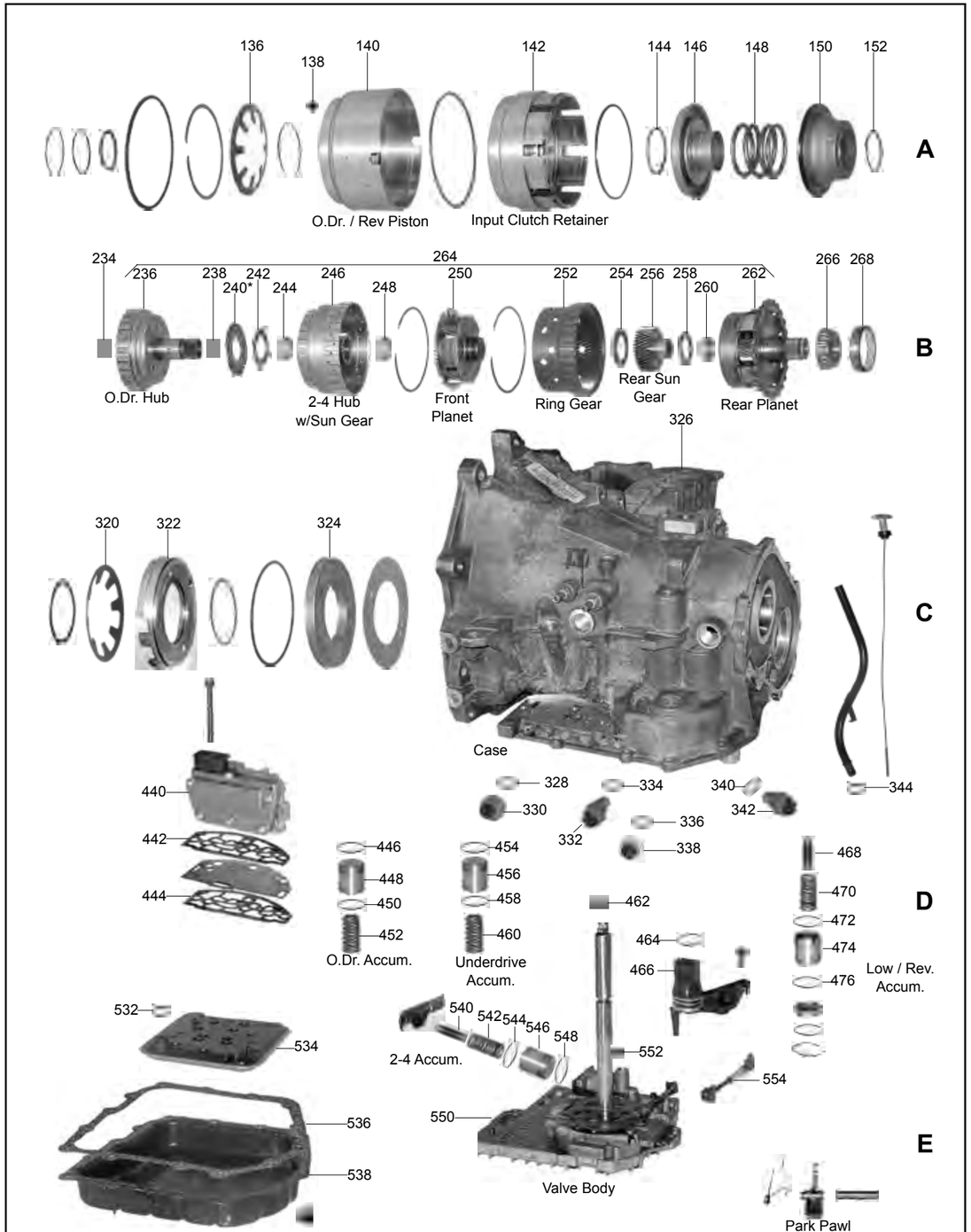
A
B
C
D
E
O.Dr. / Rev Piston
Input Clutch Retainer
O.Dr. Hub
2-4 Hub w/Sun Gear
Front Planet
Ring Gear
Rear Sun Gear
Rear Planet
Case
O.Dr. Accum.
Underdrive Accum.
Low / Rev. Accum.
2-4 Accum.
Valve Body
Park Pawl

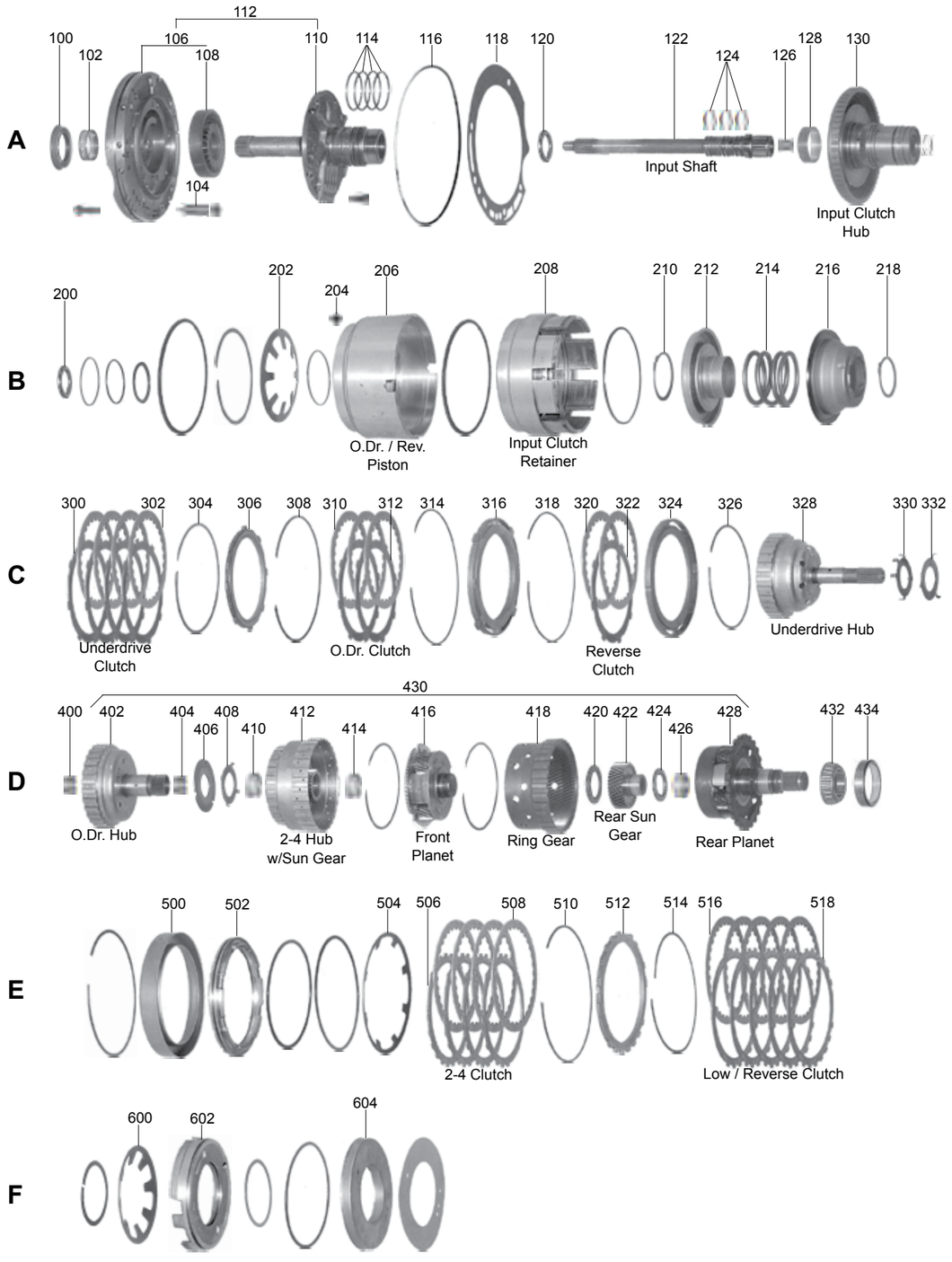
A
100 102 104 106 108 110 112 114 116 118 120 122 124 126 128 130
Input Shaft
Input Clutch Hub
B
200 202 204 206 208 210 212 214 216 218
O.Dr. / Rev. Piston
Input Clutch Retainer
C
300 302 304 306 308 310 312 314 316 318 320 322 324 326 328 330 332
Underdrive Clutch
O.Dr. Clutch
Reverse Clutch
Underdrive Hub
D
400 402 404 406 408 410 412 414 416 418 420 422 424 426 428 430 432 434
O.Dr. Hub
2-4 Hub w/Sun Gear
Front Planet
Ring Gear
Rear Sun Gear
Rear Planet
E
500 502 504 506 508 510 512 514 516 518
2-4 Clutch
Low / Reverse Clutch
F
600 602 604

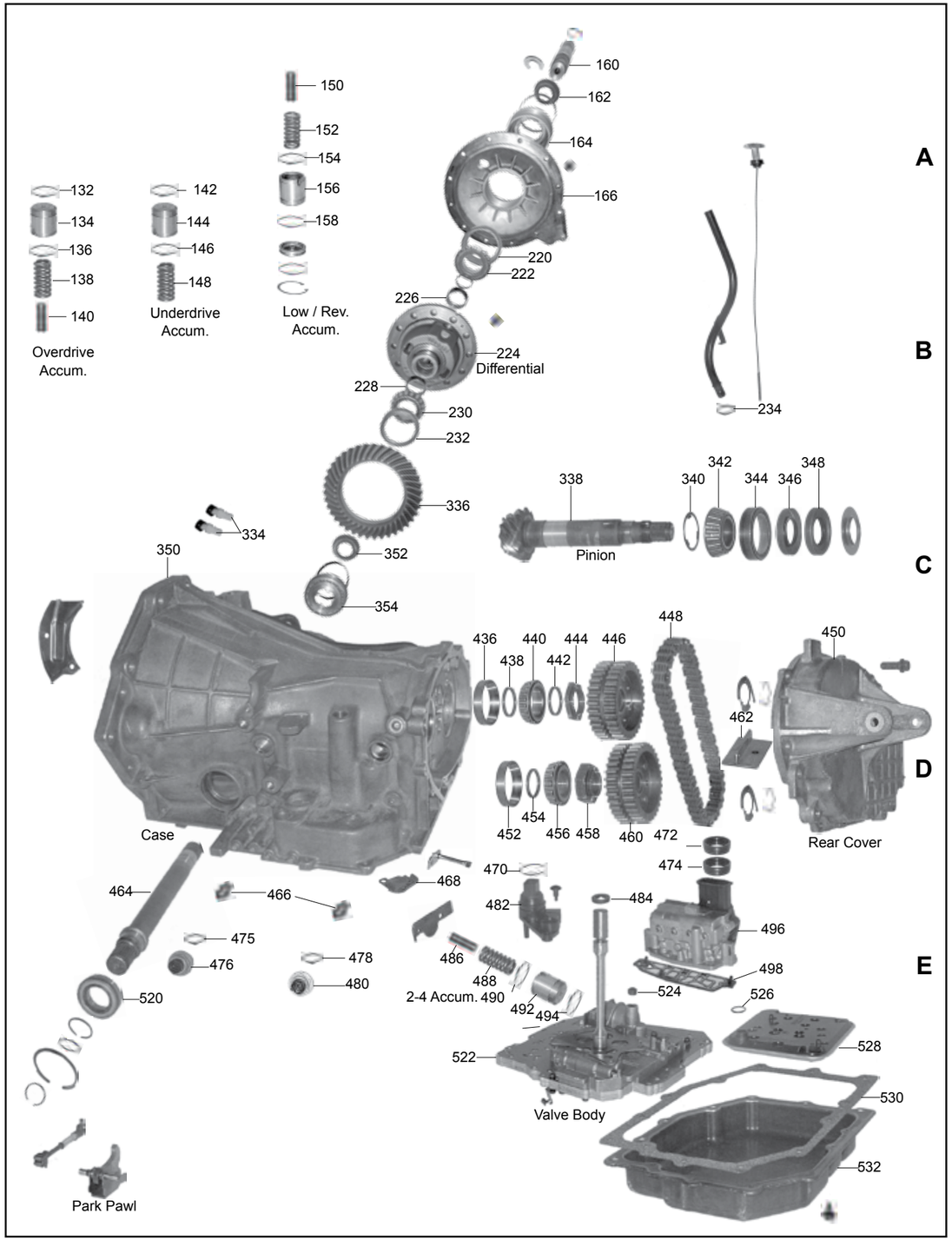
A
150 152 154 156 158
Low / Rev. Accum.
160 162 164 166 220 222 226
B
224 Differential
228 230 232
234
C
132 134 136 138 140
Overdrive Accum.
142 144 146 148
Underdrive Accum.
334 336 338 340 342 344 346 348 350 352 354
Pinion
436 438 440 442 444 446 448 450
D
Case
452 454 456 458 460 462 472
Rear Cover
464 466 468 470 474 475 476 478 480 482 484 486 488 490 492 494 496 498 520 522 524 526 528 530 532
2-4 Accum.
Valve Body
Park Pawl
E

40TE, 41TE, 41TES (A604), 42LE (A606), 42RLE

FWD, RWD
4 SPEED

REFER TO A604 PHOTO FOR ILLUSTRATION NUMBERS

ILL.		Qty.	Year	Part #	Ref. #
DELUXE KITS (SUPER KITS WITH STEELS)					
N.I.	A604, 40TE, 41TE (w/ Pistons)	1	90-03	92008A	N.L.
N.I.	41TE, 41TES (w/ Pistons)	1	04-Up	92008C	N.L.
N.I.	40TE, 40TES (w/ Pistons)	1	04-Up	92008D	N.L.
N.I.	A606 (42LE) (w/ Pistons)	1	93-Up	62008	N.L.
N.I.	42RLE (w/ Pistons)	1	03-Up	82008	N.L.
MASTER OVERHAUL KITS (WITH STEELS)					
N.I.	A604, 40TE, 41TE (w/ Pistons)	1	90-03	92006A	N.L.
N.I.	41TE, 41TES (w/ Pistons)	1	04-Up	92006C	N.L.
N.I.	40TE, 40TES (w/ Pistons)	1	04-Up	92006D	N.L.
N.I.	A606 (42LE) (w/ Pistons)	1	93-Up	62006	N.L.
N.I.	42RLE (w/ Pistons)	1	03-Up	82006	N.L.
MASTER OVERHAUL KITS (LESS STEELS)					
N.I.	A604, 40TE, 41TE (w/ Pistons)	1	90-03	92004A	N.L.
N.I.	41TE, 41TES (w/ Pistons)	1	04-Up	92004C	N.L.
N.I.	40TE, 40TES (w/ Pistons)	1	04-Up	92004D	N.L.
N.I.	A606 (42LE) (w/ Pistons)	1	93-Up	62004	N.L.
N.I.	42RLE (w/ Pistons)	1	03-Up	82004	N.L.
OVERHAUL KITS (WITH RINGS AND SEALS)					
N.I.	A604, 40TE, 41TE	1	89-03	92002	N.L.
N.I.	A604, 40TE, 41TE	1	04-Up	92002A	N.L.
N.I.	A606 (42LE)	1	93-Up	62002	N.L.
N.I.	42RLE	1	03-Up	82002	N.L.
BONDED PISTONS					
N.I.	Piston Kit, 40TE	1	04-Up	92960	N.L.
N.I.	Piston Kit, 41TE	1	04-Up	92960A	N.L.
150A	Retainer, Underdrive Piston (Bonded) (All)	1	89-Up	92960	4431612
302C	Piston, 2-4 Clutch (Bonded) (40TE)	1	04-Up	92962A	4800234AA
302C	Piston, 2-4 Clutch (Bonded) (Exc 40TE)	1	04-Up	92962B	4800257AA
322C	Piston, Low/ Reverse Clutch (Bonded) 40TE	1	04-Up	92967A	4800235AA
322C	Piston, Low/ Reverse Clutch (Bonded) 41TE	1	04-Up	262967B	5078591AA
322C	Piston, Low/ Reverse (Bonded) (42RLE)	1	03-Up	82967	4800261AA
GASKETS & O-RINGS					
114A	O-Ring, Front Pump	1	89-Up	92311	5205660
116A	Gasket, Pump (A604, 42RLE)	1	89-Up	92310	4412844
116A	Gasket, Pump (A606)	1	93-Up	62310	4659126
400D	Gasket, Differential Cover	1	89-Up	92303	820255
414D	Gasket, Transfer Gear Cover	1	89-Up	92304	4377165
442D	Gasket, Solenoid (Used w/ Separator Plate)	2	89-E99	92328	4799844AA
442D	Gasket, Solenoid (Used w/o Separator Plate)	2	L89-Up	92328A	4659982
512E	O-Ring, Extension Housing	1	89-Up	32348	6500111
532E	O-Ring, Filter	1	89-Up	92379	6032780
536E	Gasket, Bottom Pan (A604, 40TE)	1	89-Up	92300	4431997
536E	Gasket, Bottom Pan (A606)	1	93-Up	62300	N.L.
536E	Gasket, Pan (42RLE)	1	03-Up	82300	N.L.
N.I.	Seal, Manual Lever Sensor (604 96-98, 606 93-97)	1	93-98	92349	N.L.
N.I.	Seal, Manual Lever Sensor (604 99-Up, 606 98-Up)	1	98-Up	92349A	N.L.
N.I.	Seal, Manual Lever Sensor (Late Case to Early Sensor)	1	98-Up	92349C	5013863AA
N.I.	Seal, Fill Tube (42RLE)	1	89-Up	72371	4810021AB
METAL CLAD SEALS					
100A	Front Pump (Except 07-Up Avenger, Sebring)	1	89-Up	12070	4412475
100A	Front Pump (07-Up Avenger, Sebring) (Short Seal)	1	07-Up	262070	5078684AA
500E	Axle (Both Sides) (A604)	2	89-Up	32076	4412522
N.I.	Rear 2wd (w/o Boot) (42RLE) (Exc Magnum, 300)	1	03-Up	36074	C3AZ-7052A
N.I.	Rear 2wd (w/ Boot) (42RLE) (Exc Magnum, 300)	1	03-Up	36074B	C1DP-7052A
N.I.	Rear 2wd (42RLE) (Magnum, 300)	1	05-Up	78074	5210-8428-AA
N.I.	Rear 4wd (Adapter Housing) (42RLE)	1	03-Up	12074J	4269956
N.I.	Awd Transfer Case (Case Adapter)	2	91-Up	92074A	4486042
N.I.	Awd Transfer Case (Outer Half Shaft Cover Seal)	1	91-Up	32074	4412522
N.I.	Transfer Shaft (Small) w/ 12 Indentions (A606)	1	93-Up	62075	4567809
N.I.	Transfer Shaft (Large) Smooth (A606)	1	93-Up	62075A	4567811

ILL.		Qty.	Year	Part #	Ref. #
METAL CLAD SEALS (Cont.)					
N.I.	Right Axle (Outer Differential Adjuster) (A606)	1	93-Up	62076	4539891
N.I.	Left Axle (Inner Differential Adjuster) (A606)	1	93-Up	62077	4539796
SEALING RINGS & KITS					
N.I.	Ring Kit	1	89-Up	92175K	N.L.
112A	Stator Support (Seal Plated)	4	89-Up	12179A	4471874
122A	Input Shaft 1.443" OD (Teflon)	3	89-Up	92177T	4446543
544E	Accumulator (Non-Rotating) 1.013" OD (Graphite)	8	89-Up	92191	4446544
544E	Accumulator 1.013" OD (Teflon)	8	89-Up	92191T	4446544
FRICTION PLATES					
202B	Underdrive	4	90-03	92100A	4531678
202B	Underdrive (Hi-Energy)	3-4	90-Up	92100B	4531678
210B	Overdrive (.085")	3	1989	92100	4377137
210B	Overdrive (.073") (Hi-Energy)	3-4	90-Up	92100B	4531678
220B	Reverse	2	89-03	92100A	4531678
220B	Reverse (Hi-Energy)	2	90-Up	92100B	4531678
308C	2-4 Clutch	4	89-03	92104A	4567212
308C	2-4 Clutch (Hi-Energy)	3-4	90-Up	92104	4567212
316C	Low/ Reverse (Hi-Energy)	4-5	89-Up	92114	4567573
STEEL PLATES					
200B	Underdrive (All)	3-4	89-Up	92120	4531905
212B	Overdrive (.100")	2	1989	92120A	4377190
212B	Overdrive (.068") (All)	2-3	90-Up	92120	4531905
222B	Reverse (All)	1	89-Up	92120	4531905
306C	2-4 Clutch (All)	3-4	89-Up	92124	4412247
318C	Low/ Reverse (All)	4-5	89-Up	92134	4412262
N.I.	Steel Module (All)	1	90-Up	92139A	N.L.
PRESSURE PLATES					
206B	Underdrive Kit w/ Snap Ring (.236")	1	89-96	92142BK	5017514AA
206B	Underdrive Kit w/ Snap Ring (.255")	1	89-96	92142CK	5017179AA
206B	Underdrive Kit w/ Snap Ring (.275")	1	89-96	92142DK	4723681
206B	Underdrive Kit w/ Snap Ring (.248")	1	97-Up	92142GK	N.L.
206B	Underdrive Kit w/ Snap Ring (.268")	1	97-Up	92142FK	4883015AB
206B	Underdrive Kit w/ Snap Ring (.245")	1	97-Up	92142EK	4883013AB
216B	Overdrive Clutch (4 Lug) (.340") (Exc 40TE)	1	L90-Up	92140A	4531556
216B	Overdrive Clutch (4 Lug) (.480") (40TE)	1	03-Up	92140B	4800233AA
224B	Reverse (Exc 40TE)	1	93-Up	92150B	4377194
224B	Reverse (40TE)	1	03-Up	92150	4377194
312C	Low/ Reverse Kit w/ Snap Ring (.220")	1	89-Up	92154AK	4567895
312C	Low/ Reverse Kit w/ Snap Ring (.240")	1	89-Up	92154CK	4897453AA
312C	Low/ Reverse Kit w/ Snap Ring (.270")	1	89-Up	92154FK	4897456AA
FILTERS					
138A	Screen, Overdrive Piston	1	89-Up	32015	4531903
534E	Filter, A604, 40TE	1	89-Up	92010	4864505AB
534E	Filter, A606	1	93-Up	62010	4796730AB
534E	Filter, 42RLE	1	03-Up	82010	52852913AB
N.I.	Screen, Low/ Reverse Piston	1	89-Up	92015	4446629
N.I.	Screen, Solenoid (A604)	8	89-99	92016	4431786
N.I.	Screen, Solenoid (A604)	8	00-Up	92016A	N.L.
N.I.	Screen, Solenoid (A606)	1	93-Up	62016	4539787
N.I.	Screen, Solenoid (42RLE)	1	03-Up	82016	N.L.
N.I.	Screen, Valve Body Regulator Feed	1	89-Up	12018	3878313
FILTER KITS					
N.I.	Filter Kit, A604, 40TE	1	89-Up	92011	N.L.
N.I.	Filter Kit, A606	1	93-Up	62011	N.L.
N.I.	Filter Kit, 42RLE	1	03-Up	82011	N.L.
BUSHINGS					
N.I.	Bushing Kit	1	89-95	92030A	N.L.
N.I.	Bushing Kit	1	96-Up	92030B	N.L.
102A	Pump Body, Babbitt	1	89-Up	12034	2466796

40TE, 41TE, 41TES (A604), 42LE (A606), 42RLE

FWD, RWD
4 SPEED

REFER TO A604 PHOTO FOR ILLUSTRATION NUMBERS

ILL.		Qty.	Year	Part #	Ref. #
BUSHINGS (Cont.)					
102A	Pump Body, Bronze	1	89-Up	12034A	2466796
124A	Input Shaft (Rear) (.590" OD)	1	89-00	92047	4412211
124A	Input Shaft (Rear) (.604" OD)	1	01-Up	92047A	N.L.
126A	Input Clutch Hub (Front)	1	89-Up	92050	4377170
234B	Overdrive Clutch Hub (.365" Tall)	1	89-95	92052	4412219
234B	Overdrive Clutch Hub 1.142" OD Shaft (1 piece design)	1	89-95	92052E	92004-SP
234B	Overdrive Clutch Hub (.283" Tall)	1	96-Up	92052A	4659617
234B	Overdrive Clutch Hub 1.162" OD Shaft (1 piece design)	1	96-Up	92052EA	92004-L
244B	2-4 Clutch Hub (1.155" ID)	1	89-95	92039	4412222
244B	2-4 Clutch Hub (1.170" ID)	1	96-Up	92039A	4659619
260B	Rear Planet	1	89-Up	92058	4412230
502E	Extension Housing	1	89-Up	32066	5212223
N.I.	Differential Housing (Inner) (A606)	2	93-Up	62063	4567225
THRUST WASHERS/BEARINGS					
WASHERS					
N.I.	Washer Kit (w/ 4 Selectives)	1	89-Up	92200	N.L.
N.I.	Washer Kit (w/o selectives)	1	89-Up	92200A	N.L.
230B	Underdrive Hub to Overdrive Hub (5 Tab)	1	89-Up	92220	4471855
232B	Underdrive (3 Tab)	1	89-Up	92221	4431973
242B	Overdrive Hub to 2-4 Hub (4 Tab)	1	89-Up	92214	4412216
BEARINGS					
N.I.	Bearing Kit	1	89-Up	92201A	SBK-C14
118A	Bearing, Stator to Input Drum	1	89-Up	92211	4412209
130A	Bearing, Input Drum to Underdrive Hub	1	89-Up	92232	4567262
240B	Race, Overdrive Hub to 2-4 Hub (3 Slot) .057"	1	89-Up	92213B	4431664
240B	Race, Overdrive Hub to 2-4 Hub (3 Slot) .074"	1	89-Up	92213D	4431666
240B	Race, Overdrive Hub to 2-4 Hub (3 Slot) .091"	1	89-Up	92213	4431668
240B	Race, Overdrive Hub to 2-4 Hub (3 Slot) .109"	1	89-Up	92213H	4446670
254B	Bearing, Front Planet to Rear Sun Gear	1	89-Up	92238	4412229AB
258B	Bearing, Rear Sun Gear to Rear Planet	1	89-Up	92232	4567262
420D	Bearing & Race Kit, Pinion to Case	1	89-Up	92274K	4856911
432D	Bearing & Race Kit, Driven Transfer Gear to Case	1	89-Up	32274K	4269688
516E	Bearing & Race Kit, Differential (Both Sides) (Exc Below)	1	89-Up	32274K	4269688
516E	Bearing & Race Kit, Differential (Left Side)	1	L95-Up	32274AK	N.L.
522E	Bearing & Race Kit, Differential (Right Side) (Awd)	1	91-Up	92274BK	N.L.
N.I.	Bearing, Differential Housing to Retainer (A606)	2	93-Up	62289	1790541
N.I.	Shim Kit, Transfer Shaft (.005") (10 Per Kit)	1	89-Up	92276AK	92965-Z5
N.I.	Shim Kit, Differential (.005") (10 Per Kit)	1	78-Up	92293AK	39539-Z5
ELECTRICAL COMPONENTS					
330C	Sensor, Input Speed (TSS) (Exc 42RLE)	1	89-Up	92438	4800878
330C	Sensor, Input Speed (TSS) (42RLE)	1	03-Up	72436	4799061AB
332C	Switch, Neutral Safety (External) (A604)	1	1989	12410A	4057750
332C	Switch, Neutral Safety (External) (A604)	1	90-95	92410	4671017
338C	Sensor, Output Speed (VSS) (A604, A606)	1	89-Up	92436	4800879
338C	Sensor, Output Speed (VSS) (42RLE)	1	03-Up	82438	52854001AA
342C	Sensor, Range (PRNDL) (A604)	1	1989	92410A	4439059
342C	Sensor, Range (PRNDL) (A604)	1	90-95	92410B	4671019
440D	Solenoid Pack (A604, 41TES)	1	89-Up	92420B	5015646AC
440D	Solenoid Pack (A606)	1	93-Up	62420	4539766
440D	Solenoid Pack (42RLE)	1	03-Up	82420	5143151AA
466D	Sensor, Range (Blade Terminals) (A606, 42RLE)	1	98-Up	62410B	4659677A
466D	Sensor, MLPS Range and Neutral Safety (Round Pins) (A604)	1	96-E98	92410C	4659559AC
466D	Sensor, MLPS Range and Neutral Safety (Spades) (A604)	1	L98-Up	92410D	4659676AC
466D	Sensor, MLPS & Neutral Safety (Round Pins) (A606) (Repl 7 & 9 Prong)	1	93-97	62410A	4659492AC
N.I.	Switch, Pressure Transducer (41TES, 42RLE)	1	06-Up	92415	05078336AA
N.I.	Repair Kit, Solenoid Block	1	89-99	92424	4419476
N.I.	Repair Kit, Solenoid Block (A604)	1	00-Up	92424A	N.L.
N.I.	Repair Kit, Solenoid Block (A606)	1	93-Up	62424A	N.L.
N.I.	Repair Kit, Solenoid (42RLE)	1	03-Up	82424	N.L.
N.I.	Solenoid, EPC (41TES, 42RLE)	1	06-Up	92431	05078335AA
N.I.	Connector, EPC Solenoid (41TES, 42RLE)	1	06-Up	92444	05078341AA
N.I.	Repair Kit, Wire Harness (A604)	1	89-Up	92445AK	4419476
N.I.	Repair Kit, Wire Harness (A606)	1	93-Up	62445AK	N.L.

ILL.		Qty.	Year	Part #	Ref. #
ELECTRICAL COMPONENTS (Cont.)					
N.I.	Repair Kit, Wire Harness (Input & Output Speed Sensor)	1	89-Up	92445CK	4419478
N.I.	Repair Kit, Wire Harness (MLPS/ Range Sensor) (A604)	1	E99-Up	92445BAK	5014473AA
N.I.	Repair Kit, Wire Harness (MLPS/ Range Sensor) (A606)	1	98-Up	92445BBK	5014474AA
VALVE BODY RECALIBRATION KITS					
N.I.	Shift Kit®, 604, 606, 42LE, 40TE, 41TE, 41AE, 42RLE (Transgo®)	1	89-Up	92165	SK® 604
PUMPS					
110A	Pump (4 Ring Stator) (A604)	1	89-98	92500B	4567869
110A	Pump (6.570" Stator) (A604)	1	99-06	92500C	5019688AA
110A	Pump (5.825" Stator) (A604, 40TES)	1	07-Up	92500E	68020952AA
110A	Pump (A606)	1	93-98	62500A	4741659
110A	Pump (12 Lobe Inner Gear) (42RLE)	1	03-Up	82500	5101872AA
PUMP COMPONENTS					
106A	Pump Gears (.708") (A604, A606)	1	89-02	92530A	N.L.
106A	Pump Gears (12T Inner, Rotor Type) (A604, A606, 42RLE)	1	99-Up	92530B	N.L.
134A	Valve, Cooler Bypass (Pump) (OEM Style)	1	89-Up	92540	4659946
N.I.	Valve, Cooler Bypass (Pump) (Modified)	1	89-Up	92540B	92836-01K
DRUMS & COMPONENTS					
128A	Clutch Hub, Input Clutch (Cast-Iron) (For 4 Ring Stator) (All)	1	90-Up	92574A	4531637
136A	Spring, Overdrive & Reverse Return	1	89-Up	92971	4412202
140A	Piston, Overdrive/Reverse (4 Lugs) (All)	1	90-Up	92961A	5017518AA
142A	Input Clutch Retainer (w/o Bevel) (All)	1	90-Up	92554A	4505623
142A	Drum Kit, Input Clutch Retainer (w/o Bevel)	1	90-Up	92554AK	5016198AA
146A	Piston, Underdrive Housing (.500" Tall) (exc 40TE)	1	89-Up	92980	4431610
146A	Piston, Underdrive Housing (.750" Tall) (40TE)	1	03-Up	92980A	4800231AA
150A	Retainer, Underdrive Piston (Bonded) (All)	1	89-Up	92960	4431612
228B	Clutch Hub, Underdrive w/ Solid Shaft (All)	1	89-Up	92571	4864936AC
236B	Clutch Hub, Overdrive & Rev w/ Hollow Shaft (1.140" OD Shaft)	1	89-94	92570	4762712AD
236B	Clutch Hub, Overdrive & Rev w/ Hollow Shaft (1.160" OD Shaft) (All)	1	95-Up	92570A	4659993
246B	Clutch Hub & Sun Gear, 2nd-4th Clutch (1.140" ID Bushing)	1	89-95	92578	4431622
246B	Clutch Hub & Sun Gear, 2nd-4th Clutch (1.160" ID Bushing) (All)	1	96-Up	92578A	4659618AB
302C	Piston, 2-4 Clutch (Bonded) (40TE)	1	04-Up	92962A	4800234AA
302C	Piston, 2-4 Clutch (Bonded) (Exc 40TE)	1	04-Up	92962B	4800257AA
304C	Spring, 2nd/4th Clutch Return	1	89-Up	92978	4412248
320C	Spring, Low/ Reverse Return (Aluminum Piston Design)	1	89-05	92977	N.L.
320C	Spring, Low/ Reverse Return (Bonded Piston Design)	1	04-Up	92977B	N.L.
322C	Piston, Low/ Reverse Clutch	1	89-03	92967	5102529AD
322C	Piston, Low/ Reverse Clutch (Bonded) 40TE	1	04-Up	92967A	4800235AA
322C	Piston, Low/ Reverse Clutch (Bonded) 41TE	1	04-Up	262967B	5078591AA
322C	Piston, Low/ Reverse (Bonded) (42RLE)	1	03-Up	82967	4800261AA
324C	Retainer, Low/ Reverse Clutch Piston	1	89-03	92957	4431648
324C	Retainer, Low/ Reverse Clutch Piston (w/ Bleed Orifice)	1	04-Up	92957A	4800255AA
PLANETS & COMPONENTS					
250B	Front (All)	1	89-95	92582	4567539AB
250B	Planet Kit, Front (All)	1	89-95	92582K	4505597
252B	Ring Gear, Rear Planet (All)	1	89-Up	92594	4799794
262B	Rear (A604) (1.000" From Step to End of Shaft) (4 Gear Rear)	1	89-E91	92584	4431638
262B	Rear (A604) (1.125" From Step to End of Shaft) (4 Gear Rear)	1	L91-95	92584A	4897329AA
262B	Rear (A604) (1.125" From Step to End of Shaft) (5 Gear Rear)	1	96-Up	92584B	4897329AA
262B	Rear (A606) w/ Output Shaft (4 Gear)	1	93-95	62584A	4897329AA
262B	Rear (A606) w/ Output Shaft (5 Gear)	1	96-Up	62584B	4883273
262B	Rear (42RLE) (5 Gear)	1	03-Up	82584	5101874AA
264B	Gear Train, Front & Rear (A604) (4 Gear Rear) (1.125" Step)	1	L91-Up	92583A	N.L.
264B	Gear Train, Front & Rear (A604) (5 Gear Rear) (1.125" Step)	1	L91-Up	92583B	N.L.
264B	Gear Train, Front & Rear (A606)	1	93-Up	62583A	N.L.
SUN GEARS					
256B	Sun Gear, Rear Planet (All)	1	89-Up	92614	4377080

ILL.		Qty.	Year	Part #	Ref. #
SHAFTS					
120A	Input Shaft (22 Spline)	1	89-Up	92670A	4549223
120A	Input Shaft (24 Spline)	1	89-Up	92670B	N.L.
120A	Input Shaft (40TES Only)	1	07-Up	92670C	N.L.
120A	Input Shaft (A606, 42RLE)	1	93-Up	62670	4626452
N.I.	Output Shaft (2wd) (12.875" Long) (42RLE)	1	03-Up	82678	N.L.
N.I.	Output Shaft (4wd) (7.125" Long) (42RLE)	1	03-Up	82678A	N.L.
VALVE BODIES & GOVERNORS					
550E	Valve Body (A604)	1	89-95	92740-1	N.L.
550E	Valve Body (A604) Round Pin Terminal	1	96-98	92740-2	N.L.
550E	Valve Body (A604) Spade Pin Terminal	1	98-06	92740-3	N.L.
550E	Valve Body (A604, 41TES) VLP Type	1	07-Up	92740-4	N.L.
550E	Valve Body (A606) Round Pin Terminal	1	93-97	62740-1	N.L.
550E	Valve Body (A606) Spade Pin Terminal	1	98-Up	62740-2	N.L.
550E	Valve Body (42RLE)	1	03-Up	82740-1	N.L.
N.I.	Sleeve, Pressure Regulator (Sonnax)	1	89-Up	92741P-2	N.L.
N.I.	Bushing, Boost Valve (Transgo®)	1	89-Up	92741T-2	N.L.
DIFFERENTIALS					
418D	Pinion (Transfer Shaft) (15T) (A604)	1	89-Up	92730C	N.L.
418D	Pinion (Transfer Shaft) (17T) (A604)	1	89-Up	92730A	4531978
418D	Ring & Pinion Set (Transfer Shaft) (59T x 17T) (A604)	1	89-Up	92730AK	4531978
418D	Pinion & Pinion Set (Transfer Shaft) (60T x 16T) (A604)	1	89-Up	92730BK	4531976
518E	Differential Housing (A604) (Small ID)	1	89-95	92716	4798858AB
518E	Differential Housing (A604) (Large ID)	1	95-Up	92716A	4659500
N.I.	Retaining Clip, Differential pin (Narrow Bolt Type)	1	00-Up	92717C	4800013AB
N.I.	Differential Shaft Kit (.660" Diameter) (A604)	1	89-Up	92717AK	N.L.
N.I.	Differential Shaft Kit (.735" Diameter) (A604)	1	89-Up	92717BK	N.L.
CHAINS AND SPROCKETS					
410D	Gear Kit, 47T Output & 49T Transfer (A604)	1	92-Up	92710BK	N.L.
410D	Gear Kit, 50T Output & 46T Transfer (A604)	1	92-Up	92710FK	N.L.
N.I.	Chain (Dual Narrow) (A606)	1	95-Up	62700B	4659190
N.I.	Chain Snubber, Rubber Faced For Double Chains (A606)	1	95-Up	62701C	N.L.
CASES/HOUSINGS & COMPONENTS					
402D	Differential Cover, Retainer (A604)	1	89-Up	92758	7377169
416D	Rear Cover, Transfer Gear (A604)	1	89-Up	92759A	4657255
538E	Pan (A604)	1	89-Up	92765	4431997
538E	Pan (A606)	1	93-Up	62765	4539762
538E	Pan (42RLE)	1	03-Up	82765	52852912AC
SNAP RINGS					
N.I.	Snap Ring Kit, Complete Kit	1	89-Up	92860K	4377189
204B	Underdrive Clutch Pressure Plate (Bottom)	1	89-96	92876	4412307
208B	On Top of Underdrive Pressure Plate (.070")	1	89-E90	92860	4377189
208B	On Top of Underdrive Pressure Plate (.076")	1	L90-96	92860A	4567602
208B	On Top of Underdrive Pressure Plate (.091")	1	97-Up	92860B	4659934
214B	Overdrive Clutch Pressure Plate (Bottom)	1	89-Up	92861	4505621
218B	Overdrive Clutch Pressure Plate (Top) (.075")	1	89-Up	92891	4505622
226B	Reverse Clutch Pressure Plate (.061")	1	89-Up	92892	4377195
226B	Reverse Clutch Pressure Plate (.071")	1	89-Up	92892A	4412871
226B	Reverse Clutch Pressure Plate (.081")	1	89-Up	92892B	4412872
226B	Reverse Clutch Pressure Plate (.090")	1	89-Up	92892C	4412873
314C	Low/ Reverse Pressure Plate (Tapered .069")	1	88-97	92885	4412269
314C	Low/ Reverse Pressure Plate (Tapered .076")	1	98-Up	92885A	4799858AA
314C	Low/ Reverse Pressure Plate (Flat .039")	1	88-Up	92885B	4412395
MISCELLANEOUS COMPONENTS					
426D	Retainer, Transfer Gear Cup Race (Steel Housing) (A604)	1	89-Up	92713	4773735AB
436D	Nut, Transfer Gear (Gray) (A604)	1	89-E91	92796-2	6502611
N.I.	Nut, Output Shaft (Planet) (A606)	1	93-Up	62795	6502476
N.I.	Nut, Pinion Shaft (A606)	1	93-Up	62796	6502447
N.I.	Cup Plug, Park Pawl (.375")	1	89-Up	54483A	8620318
N.I.	Retaining Clip, Output Shaft (42RLE)	1	89-Up	82895	52852916AA

ILL.		Qty.	Year	Part #	Ref. #
SERVOS & ACCUMULATORS					
452D	Spring, Accumulator	1-4	89-95	92936	4471880
452D	Spring, Accumulator (Case / VB) Inner / Outer Update	1-4	89-Up	92946B	4567575
448D	Piston, Accumulator (Case / VB) Aluminum	1-4	89-Up	92937	4446620
448D	Piston, Accumulator (Case / VB) Kit w/ Sleeve	1-4	89-Up	92937BK	92834-03K
N.I.	Cover, Accumulator Low/ Reverse (Bonded) (All)	1	89-Up	92949A	4431617AB
TECHNICAL MANUALS					
N.I.	Tech Manual (A604)	1	89-Up	92400	83-604TM
N.I.	Tech Manual (A606)	1	93-Up	62400	83-A606TM
N.I.	Tech Manual, Handbook (A604 1989-91 Updates)	1	89-91	92400H	83-604TM-U1
N.I.	Code Book, Diagnostic Codes (ATSG)	1	89-Up	92400CB	83-CBTM
N.I.	Code Book, Diagnostic Codes (ATSG) Spanish	1	89-Up	92400DB	N.I.
TOOLS					
N.I.	Dipstick Fluid Measuring Tool (42RLE)	1	06-Up	T-9336A	N.L.
N.I.	Low/ Reverse Piston Installer	1	89-Up	T-9003	N.L.
N.I.	Overdrive Reverse Reaction Plate Spring Compressor Kit	1	89-Up	T-1420K	N.L.
N.I.	Spring Compressor, 2-4 Piston	1	89-Up	T-1437	N.L.

Notes

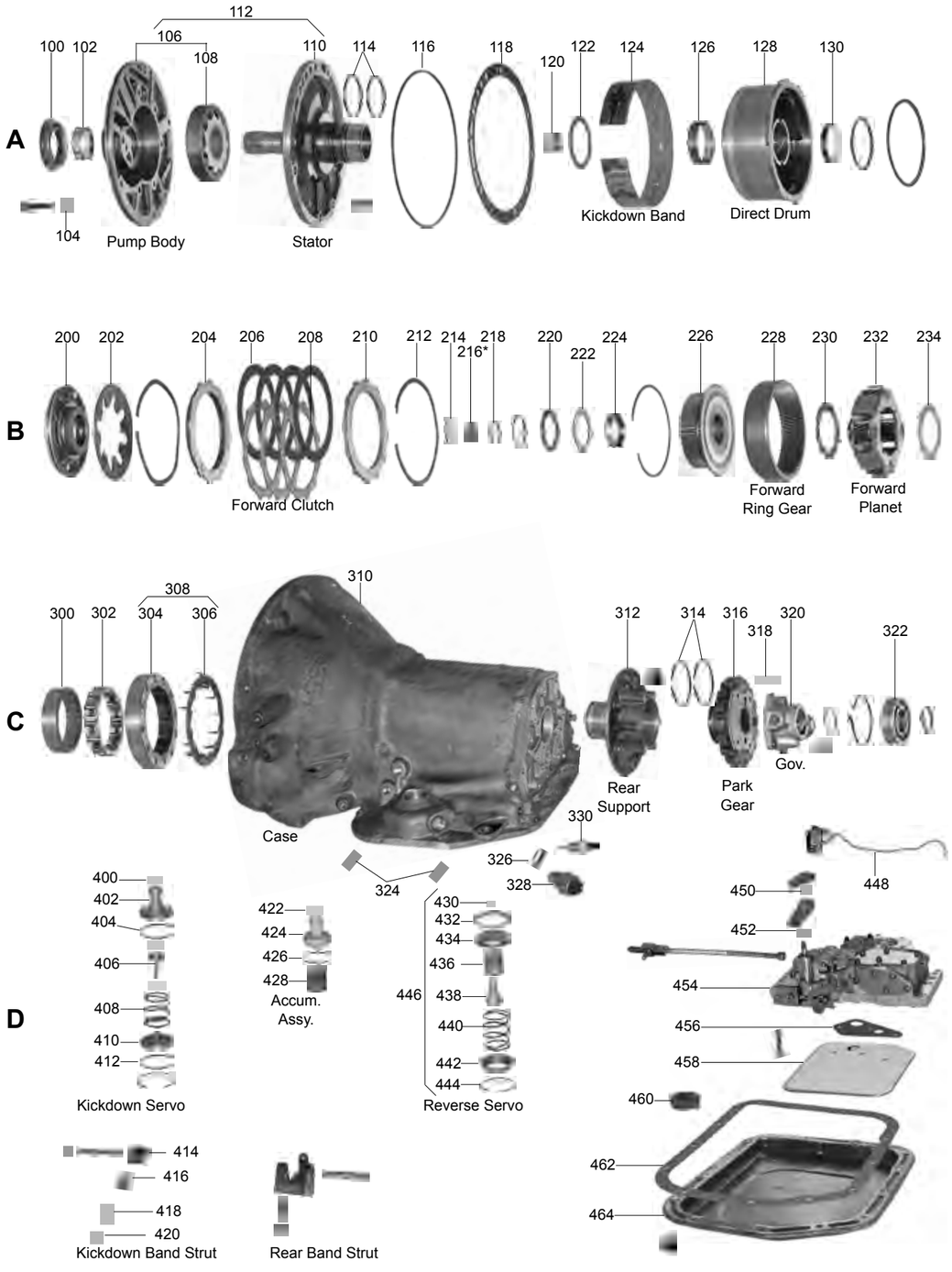
A
100
102
104
106
108
110
112
114
116
118
120
122
124
126
128
130
Pump Body
Stator
Kickdown Band
Direct Drum
B
200
202
204
206
208
210
212
214
216*
218
220
222
224
226
228
230
232
234
Forward Clutch
Forward Ring Gear
Forward Planet
C
300
302
304
306
308
310
312
314
316
318
320
322
Case
Rear Support
Park Gear
Gov.
324
326
328
330
D
400
402
404
406
408
410
412
Kickdown Servo
414
416
418
420
Kickdown Band Strut
422
424
426
428
Accum. Assy.
430
432
434
436
438
440
442
444
446
Reverse Servo
Rear Band Strut
448
450
452
454
456
458
460
462
464

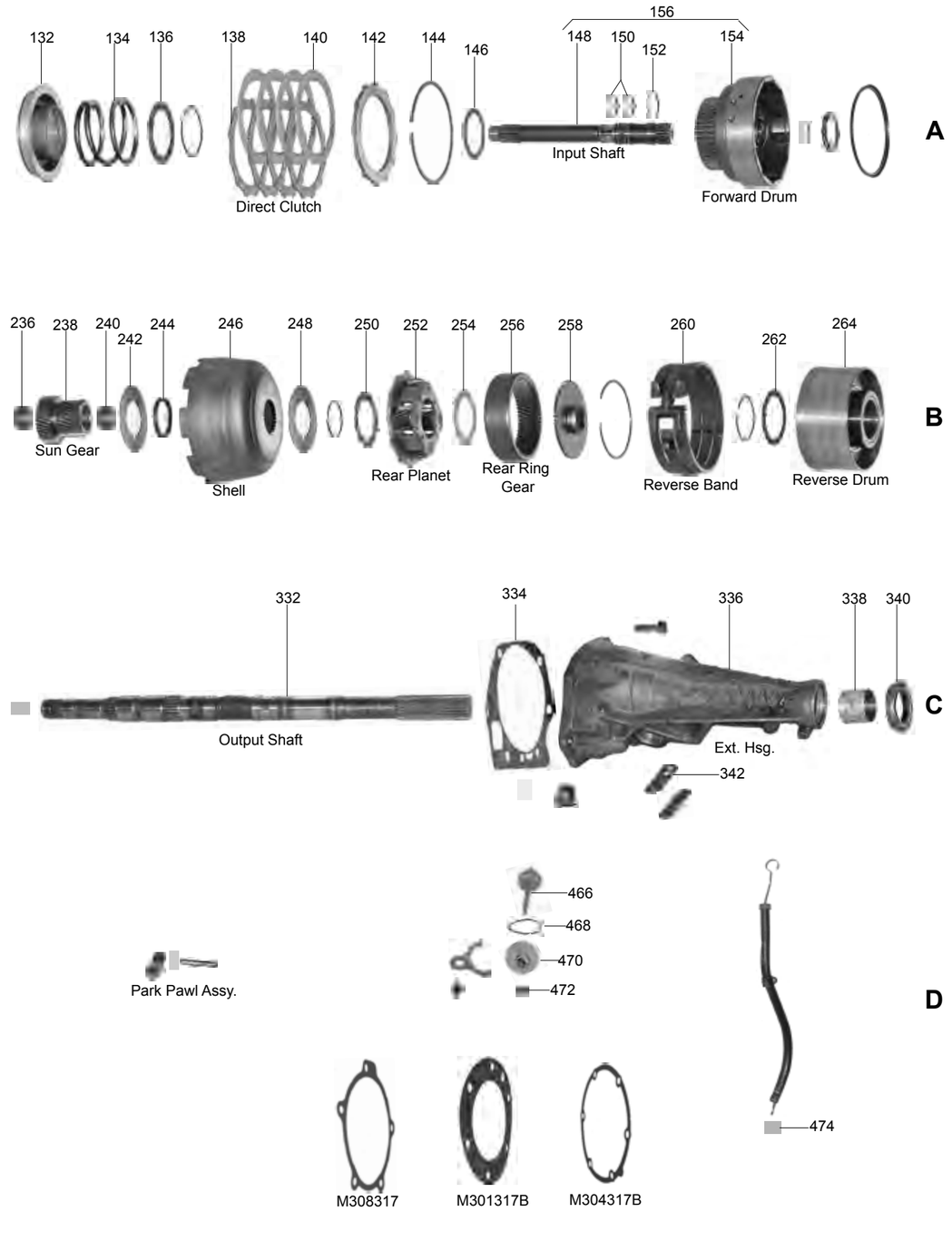
A
132
134
136
138
140
142
144
146
148
150
152
154
156
Direct Clutch
Input Shaft
Forward Drum
B
236
238
240
242
244
246
248
250
252
254
256
258
260
262
264
Sun Gear
Shell
Rear Planet
Rear Ring Gear
Reverse Band
Reverse Drum
C
332
334
336
338
340
Output Shaft
Ext. Hsg.
342
D
Park Pawl Assy.
466
468
470
472
474
M308317
M301317B
M304317B

ILL.		Qty.	Year	Part #	Ref. #
DELUXE KITS (SUPER KITS WITH STEELS)					
N.I.	A904	1	72-98	12008C	N.L.
N.I.	A904 (30RH, 32RH)	1	99-04	12008G	N.L.
MASTER OVERHAUL KITS (WITH STEELS)					
N.I.	A904	1	72-98	12006C	N.L.
N.I.	A904 (30RH, 32RH)	1	99-04	12006G	N.L.
MASTER OVERHAUL KITS (LESS STEELS)					
N.I.	A904	1	72-98	12004C	N.L.
N.I.	A904 (30RH, 32RH)	1	99-04	12004G	N.L.
OVERHAUL KITS (WITH RINGS AND SEALS)					
N.I.	A904	1	72-98	12002C	N.L.
N.I.	A904 (30RH, 32RH)	1	99-04	12002G	N.L.
N.I.	A904	1	60-71	12002A	N.L.
GASKETS & O-RINGS					
104A	Gasket, Pump Bolt Washer	1	60-04	44309	MD707653
116A	O-Ring, Front Pump	1	60-04	12311	2204709
118A	Gasket, Front Pump	1	60-04	12310	52118266
326C	Gasket/Washer, Neutral Switch	1	66-04	12377A	2408143
334C	Gasket, Extension Housing to Case	1	66-04	22305AB	2466954
342C	Gasket, Output Shaft Bearing Cover	1	66-04	12305J	2801398
450D	Seal, Throttle Lever Shaft	1	60-04	12349	2466548
462D	Gasket, Pan (exc Colt)	1	60-04	12300	4295875
462D	Gasket, Pan (Colt)	1	60-04	12300D	3681438
468D	O-Ring, Speed-O Housing (Red)	1	66-04	12368	6031370
474D	O-Ring, Filler Tube	1	66-04	44371A	6030608
N.I.	Gasket, Solenoid	1	88-04	12328A	4446194
N.I.	External Seal Kit	1	66-04	12390	N.L.
METAL CLAD SEALS					
100A	Front Pump	1	60-04	12070	4412475
340C	Rear (w/ Boot)	1	66-72	12074B	2400163
340C	Rear (w/ Boot)	1	73-04	12074D	4058047
340C	Rear (w/o Boot)	1	73-04	12074E	3515384
340C	Rear (4wd, Transfer Case Adapter)	1	60-04	12074J	4269956
452D	Manual Shaft .250" Thick	1	60-04	22072	2466842
452D	Manual Shaft .375" Thick	1	60-04	22072A	2466842
SEALING RINGS & KITS					
N.I.	Ring Kit Complete	1	60-04	12175CK	N.L.
FRICTION PLATES					
140A	Direct	3-5	60-04	12106	4239805
140A	Direct (Hi-Energy)	3-5	60-04	12106A	4617362
140A	Direct (High Performance)	3-5	60-04	12106HP	N.L.
206B	Forward	3-4	60-04	12108	3780285
206B	Forward (Hi-Energy)	3-4	60-04	12108A	4713880
206B	Forward (High Performance)	3-4	60-04	12108HP	N.L.
STEEL PLATES					
138A	Direct (.068")	3-4	60-98	12126	1942403
138A	Direct (.068") (Kolene)	3-4	60-98	12126K	1942403
138A	Direct (.088") (Oversized)	AR	60-98	12126X	N.L.
138A	Direct (.086") (V-Notched T)	4-5	99-04	12126A	1942403AC
208B	Forward (.068")	3-4	60-04	12126	1942403
208B	Forward (.068") (Kolene)	3-4	60-04	12126K	1942403
208B	Forward (.088") (Oversized)	AR	60-04	12126X	N.L.
PRESSURE PLATES					
142A	Direct (Flat)	1	60-04	12146	2801969
210B	Forward (Flat)	1	60-04	12146	2801969

ILL.		Qty.	Year	Part #	Ref. #
FILTERS					
318C	Governor Screen	1	60-04	12014	3743519
458D	Small Dacron	1	60-04	12010A	3621456
458D	Small Brass	1	60-04	12010B	3410253
458D	Large Dacron	1	67-04	12010C	3515996
458D	Large Brass	1	67-04	12010D	3515996
N.I.	Valve Body Regulator Feed Line	1	60-04	12018	3878313
FILTER KITS					
N.I.	Filter Kit, Dacron	1	67-04	12011G	N.L.
BANDS					
124A	Kickdown, Flex (1.375" Wide)	1	61-91	12022AA	4058863
124A	Kickdown, Flex (1.60" Wide)	1	92-04	12022B	4617849
124A	Kickdown, Flex (1.60" Wide) (High Performance "Pro Series")	1	92-04	12022D	N.L.
260B	Reverse, Single Wrap	1	60-04	12024	4443184
260B	Reverse, Double Wrap (2.0" Wide)	1	68-04	12024A	4443184
BUSHINGS					
N.I.	Bushing Kit	1	68-E92	12030B	N.L.
N.I.	Bushing Kit	1	L92-04	12030BA	N.L.
102A	Pump Body (Babbitt)	1	60-04	12034	2466796
102A	Pump Body (Bronze)	1	60-04	12034A	2466796
120A	Stator	1	68-77	12037	2801728
120A	Stator	1	78-04	12037A	4058635
126A	Direct Drum (Wide)	1	60-E92	12046	2801727
126A	Direct Drum (Front)	1	93-04	12046B	4617157
130A	Direct Drum (Rear)	1	L92-04	12046C	4617159
224B	Front Ring Gear Hub	1	76-04	12050	3681967
236B	Sun Gear	2	60-04	12052	1942496
338C	Extension Housing	1	66-04	12066	2801726
THRUST WASHERS/BEARINGS					
WASHERS					
N.I.	Washer Kit	1	60-77	12200	N.L.
N.I.	Washer Kit	1	78-04	12200A	N.L.
N.I.	Shim Kit, End Play (Includes 3 Each of .015" & .025" Shims)	1	88-04	22232K	N.L.
122A	Direct Drum (Front & Rear) (Fiber) .042"	2	60-70	12211A	2204369
122A	Direct Drum (Front & Rear) (Fiber) (.062")	2	71-04	12211	4617786
216B	Output Shaft (.052") (Metal, 1 Internal Flat)	1	76-78	12233B	3878777
216B	Output Shaft (.052") (Metal, 2 Internal Flats)	1	79-89	12233C	4269196
216B	Output Shaft (.052") (Metal, 3 Tab)	1	90-04	12233D	4505185
216B	Output Shaft (.068") (Metal, 1 Internal Flat)	1	76-78	12233BA	3878778
216B	Output Shaft (.068") (Metal, 2 Internal Flats)	1	79-89	12233CA	4269197
216B	Output Shaft (.068") (Metal, 3 Tab)	1	90-04	12233DA	4505186
216B	Output Shaft (.083") (Fiber)	1	60-75	12233AB	2538671
216B	Output Shaft (.083") (Metal, 1 Internal Flat)	1	76-78	12233BB	3878779
216B	Output Shaft (.083") (Metal, 2 Internal Flats)	1	79-89	12233CB	4269198
216B	Output Shaft (.083") (Metal, 3 Tab)	1	90-04	12233DB	4505187
220B	Forward Drum to Hub (1.625" ID)	1	60-72	12234	2538696
220B	Forward Drum to Hub (1.500" ID)	1	73-04	12234A	3681969
230B	3 Gear Front & Rear Planet (3 Outer Tangs)	4	64-74	12238	2801356
230B	3 Gear Front & Rear Planet (3 Outer Tangs)	4	74-04	12238A	3743027
230B	4 Gear Front & Rear Planet (4 Outer Tangs) (2.750")	4	74-79	12238B	3681935
230B	4 Gear Front & Rear Planet (4 Inner Tangs) (2.625")	2	80-04	12238C	4130518
BEARINGS					
N.I.	Bearing Kit	1	88-04	22201A	N.L.
214B	Race, Input Shaft Cup	1	88-89	12232	4058982
214B	Race, Output Shaft	1	90-04	12232A	4505188
322C	Bearing, Output Shaft (2.445" OD) (Exc 00-Up Jeep)	1	66-04	12272	3410465
322C	Bearing, Output Shaft (2.835" OD) (Jeep)	1	00-04	22272AA	4130537
322C	Bearing, Output Shaft (w/ Bolt-On Yoke)	1	62-04	22272B	1672194
N.I.	Bearing, Case Repair	1	62-04	22257	22556-BRG

ILL.		Qty.	Year	Part #	Ref. #
ELECTRICAL COMPONENTS					
328C	Neutral Safety Switch, 3 Prong (Long)	1	69-77	12410	2932820
328C	Neutral Safety Switch, 3 Prong (Short)	1	78-97	12410A	4057750
328C	Neutral Safety Switch/ Back-Up Light (3 Prong Screw in)	1	98-04	12410C	56028181AB
330C	Connector, Case (1 Wire)	1	87-04	12444A	4348945
330C	Connector, Case (2 Wire)	1	96-04	12444B	56038235
N.I.	Solenoid, Lock-Up (TCC) (1 Wire)	1	87-96	12425	4348719
N.I.	Solenoid, Lock-Up (TCC) (2 Wire)	1	97-04	12425A	52118595
VALVE BODY RECALIBRATION KITS					
N.I.	Shift Kit® NoYoYo®, w/ Manual Valve (Transgo®)	1	65-04	T22165	SK® TFSC
N.I.	Valve Body Kit (Superior)	1	62-94	S22165	KTF-TC
N.I.	Reprogramming Kit™, HD & Hi-Perf w/ Manual Valve (Transgo®)	1	65-04	T22169	TF-1
N.I.	Reprogramming Kit™, Race; Back to Low At Any Speed (Transgo®)	1	65-04	T22171	TF-2
VALVE BODY COMPONENTS					
N.I.	Spring, Lock-Up	1	60-04	12741C-3	N.L.
N.I.	Valve, Pressure Regulator	1	60-04	22741P	N.L.
N.I.	Valve, Pressure Regulator (Modified)	1	62-77	22741PB	N.L.
PUMPS					
112A	Pump, Non Lock-Up	1	68-74	12500A	N.L.
112A	Pump, Non Lock-Up (2 Rings on Input Shaft)	1	78-92	12500AB	N.L.
112A	Pump, Lock-Up (2 Lugs) (Exc Colt)	1	78-92	12500C	N.L.
112A	Pump, Lock-Up (2 Flats) (Direct Drum has 1 Bushing) (2.245"OD Seal)	1	93-94	12500CA	N.L.
112A	Pump, Lock-Up (2 Flats) (Direct Drum has 2 Bushings) 13 Hole Gasket	1	93-94	12500CC	N.L.
112A	Pump, Lock-Up (2 Flats) (Direct Drum has 2 Bushings) 14 Hole Gasket	1	95-04	12500CG	4778552
PUMP COMPONENTS					
108A	Pump Gears (2 Lugs)	1	60-77	12530	3621478
108A	Pump Gears (2 Flats)	1	93-04	12530C	N.L.
DRUMS & COMPONENTS					
128A	Direct, 4 Clutch (6.00" OD At Lugs) (1 Bushing)	1	71-89	12555	3621476
128A	Direct, 4 Clutch (6.25" OD At Lugs) (2 Bushings)	1	92-04	12555C	4531285AB
128A	Direct, 5 Clutch (6.00" OD At Lugs) (1 Bushing)	1	76-90	12555A	3743282
128A	Direct, 5 Clutch (6.25" OD At Lugs) (2 Bushings)	1	92-04	12555B	N.L.
154A	Forward, Lock-Up (4 Clutch, 26 Spline)	1	90-04	12554E	4186879
202B	Spring, Forward Return Spring	1	60-04	12974	4728487
264B	Reverse	1	74-87	12556	4130867
264B	Reverse	1	88-04	12556A	4637956
PLANETS & COMPONENTS					
228B	Ring Gear w/ Hub, Front (4.375" OD For Small Planet)	1	60-04	12592	N.L.
228B	Ring Gear w/ Hub, Front (5" OD For Large Planet) (1 Tab Washer)	1	60-04	12592A	N.L.
228B	Ring Gear w/ Hub, Front (5" OD For Large Planet) (2 Tab Washer)	1	60-04	12592B	N.L.
232B	Front, 4 Gear, Steel (Large, Sun Gear)	1	60-04	12582B	3681989
252B	Rear, 4 Gear, Steel	1	74-04	12584B	N.L.
256B	Ring Gear w/ Hub, Rear	1	60-04	12594	N.L.
SUN GEARS					
238B	Sun Gear, Front/ Rear Planet (28T / 28T)	1	60-04	12612	N.L.
238B	Sun Gear, Front/ Rear Planet (38T / 28T)	1	78-04	12612B	N.L.
ONE WAY CLUTCHES					
302C	Sprag, Rear (10 Spring & Rollers)	1	64-88	12654	N.L.
300C	Inner Race, Rear Sprag (Slide on)	1	60-04	12664	3515618
302C	Sprag, Rear (12 Spring & Rollers)	1	88-04	54654A	4431432
SHELLS & SUPPORTS					
246B	Shell (Large Planet) 6.125" OD At Lugs	1	78-04	12622A	N.L.
246B	Shell (Large Planet) 6.375" OD At Lugs	1	88-04	12622B	4531288
246B	Sun Gear & Shell (Large Planet) 6.125" OD At Lugs	1	78-04	12622AK	N.L.
246B	Sun Gear & Shell (Large Planet) 6.375" OD At Lugs	1	92-04	12622BK	N.L.
312C	Output Shaft Support, 4 Bolt	1	66-89	12634	2466881
312C	Output Shaft Support, 6 Bolt	1	88-04	12634A	4431433

ILL.		Qty.	Year	Part #	Ref. #
VALVE BODIES & GOVERNORS					
320C	Governor w/ Support	1	78-04	12680K	N.L.
454D	Valve Body Non Lock-Up	1	78-86	12740-1	N.L.
454D	Valve Body Lock-Up (No Solenoid)	1	78-86	12740-2	N.L.
454D	Valve Body Lock-Up (1 Wire Solenoid)	1	87-04	12740-3	N.L.
454D	Valve Body Lock-Up (2 Wire Solenoid, Small Port)	1	94-95	12740-4	N.L.
454D	Valve Body Lock-Up (2 Wire Solenoid, Large Port)	1	95-04	12740-5	N.L.
N.I.	Governor Valve, Steel	1	90-04	A22681	N.L.
MISCELLANEOUS COMPONENTS					
N.I.	Insulator, Detent Lever (Long) (Screw-in Neutral Safety Switch)	1	70-Up	22993C	N.L.
324C	Cooler Line Fittings (1/8" to 5/16" External Flare) (Repl A12996)	1	60-95	M462AB	N.L.
324C	Cooler Line Fittings (3/8" to 1/4" Male Fitting) (Repl A12996B)	1	60-95	M462AC	N.L.
SERVOS & ACCUMULATORS					
424D	Piston, Accumulator (In Case)	1	60-04	22927	N.L.
434D	Piston, Rear Servo 2.546" OD	1	60-04	12912	N.L.
434D	Piston, Rear Servo 2.545" OD	1	60-04	S12912	N.L.
N.I.	Pin, Reverse Servo Piston	1	60-04	12913	N.L.
TECHNICAL MANUALS					
N.I.	Tech Manual	1	60-04	12400	N.L.

Notes

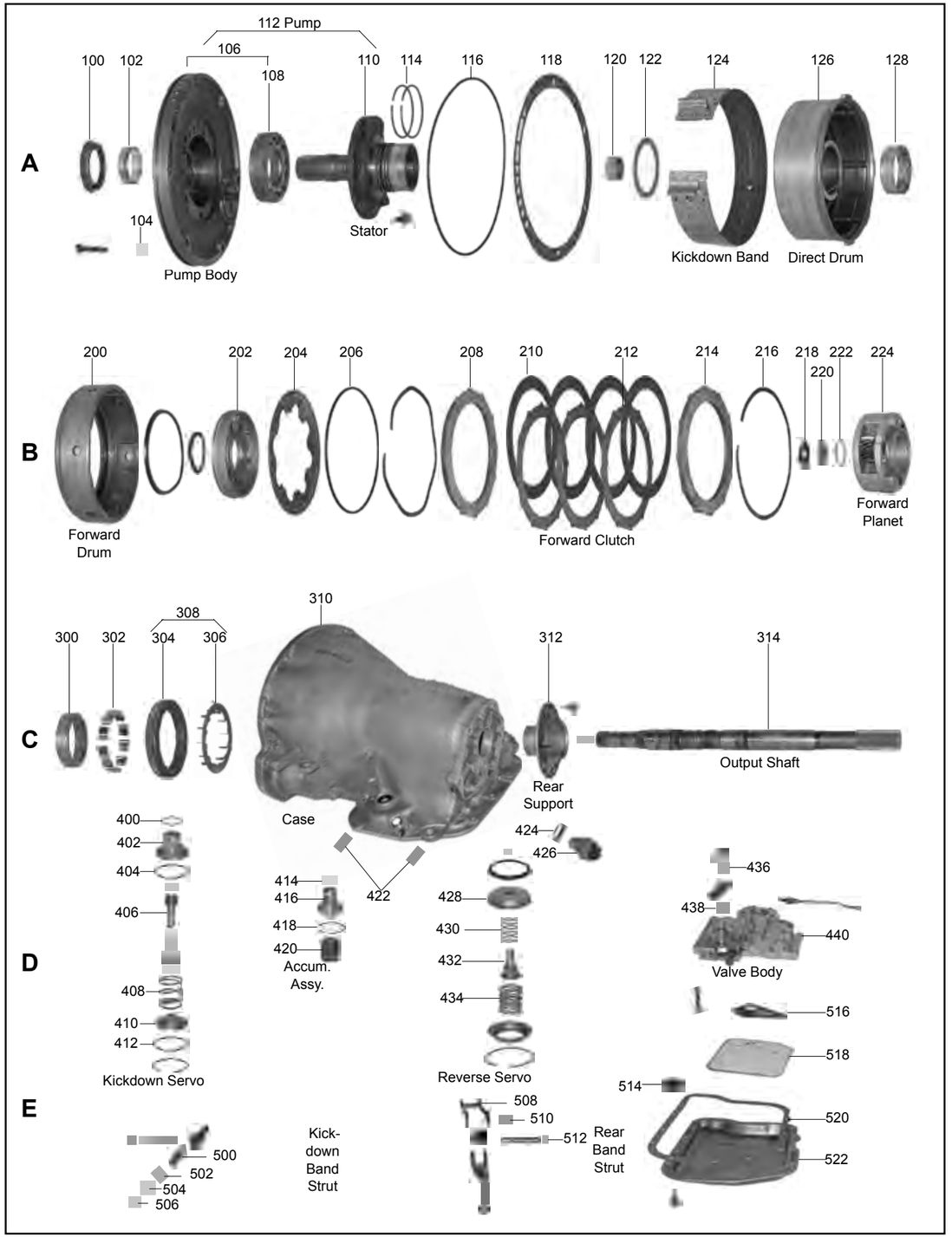
A
100
102
104
106
108
110
112 Pump
114
116
118
120
122
124
126
128
Pump Body
Stator
Kickdown Band
Direct Drum
B
200
202
204
206
208
210
212
214
216
218
220
222
224
Forward Drum
Forward Clutch
Forward Planet
C
300
302
304
306
308
310
312
314
Case
Rear Support
Output Shaft
D
400
402
404
406
408
410
412
Kickdown Servo
414
416
418
420
422
Accum. Assy.
424
426
428
430
432
434
Reverse Servo
436
438
440
Valve Body
516
518
514
520
522
Rear Band Strut
E
500
502
504
506
Kick-down Band Strut
508
510
512

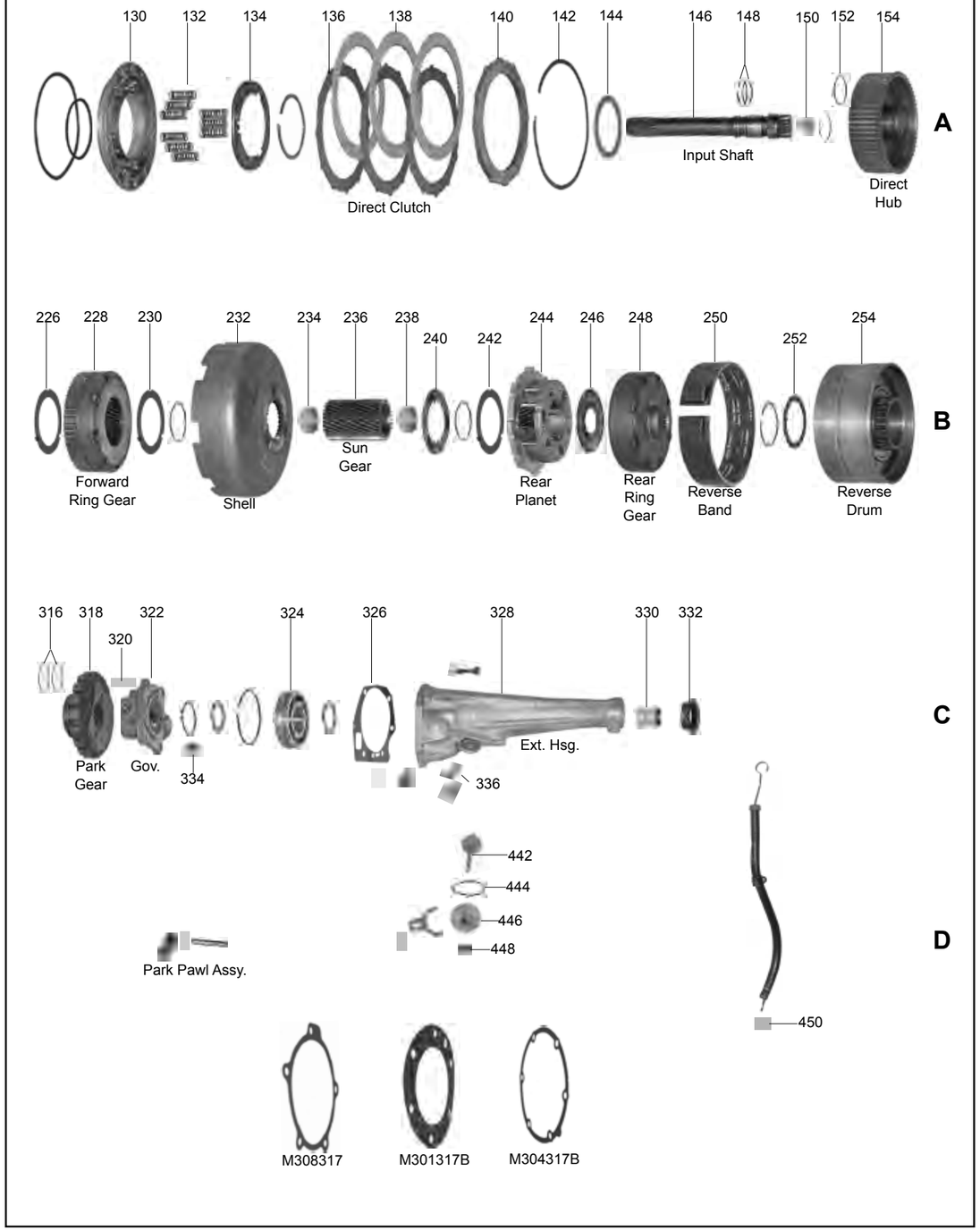
A
130
132
134
136
138
140
142
144
146
148
150
152
154
Direct Clutch
Input Shaft
Direct Hub
B
226
228
230
232
234
236
238
240
242
244
246
248
250
252
254
Forward Ring Gear
Shell
Sun Gear
Rear Planet
Rear Ring Gear
Reverse Band
Reverse Drum
C
316
318
320
322
324
326
328
330
332
Park Gear
Gov.
334
Ext. Hsg.
336
D
442
444
446
448
Park Pawl Assy.
450
M308317
M301317B
M304317B

ILL.		Qty.	Year	Part #	Ref. #
DELUXE KITS (SUPER KITS WITH STEELS)					
N.I.	A727	1	62-70	22008	N.L.
N.I.	A727	1	71-Up	22008C	N.L.
MASTER OVERHAUL KITS (WITH STEELS)					
N.I.	A727	1	62-70	22006	N.L.
N.I.	A727	1	71-Up	22006C	N.L.
MASTER OVERHAUL KITS (LESS STEELS)					
N.I.	A727	1	62-70	22004	N.L.
N.I.	A727	1	71-Up	22004C	N.L.
OVERHAUL KITS (WITH RINGS AND SEALS)					
N.I.	A727	1	62-70	22002	N.L.
N.I.	A727	1	71-Up	22002C	N.L.
GASKETS & O-RINGS					
104A	Gasket, Pump Bolt Washers	6	66-Up	44309	MD707653
116A	O-Ring, Front Pump	1	62-Up	22311	1942021
118A	Gasket, Pump	1	62-Up	22310	4028377
326C	Gasket, Extension Housing to Case	1	66-Up	22305AB	2466954
336C	Gasket, Output Shaft Bearing Cover	1	66-Up	12305J	2801398
424D	Gasket/Washer, Neutral Safety Switch	1	62-Up	12377A	2408143
436D	Seal, Throttle Lever Shaft	1	62-Up	12349	2466548
444D	O-Ring, Speed-O Housing (Red)	1	62-Up	12368	6031370
512E	O-Ring, Reverse Band Lever Shaft	1	90-Up	44380	1672358
520E	Gasket, Pan	1	62-Up	22300	2464324
N.I.	External Seal Kit	1	66-Up	22390	N.L.
METAL CLAD SEALS					
100A	Front Pump	1	62-Up	22070	4531225
332C	Rear (w/o Boot)	1	65-Up	36074	C3AZ-7052A
332C	Rear (w/ Boot)	1	65-Up	36074B	C1DP-7052A
332C	Rear w/ Bolt on Yoke (2.450" OD)	1	62-92	22074A	2205080
332C	Rear w/ Bolt on Yoke (2.750" OD)	1	93-Up	22074AA	4412507
332C	Transfer Case Adapter (4wd)	1	90-Up	12074J	4269956
438D	Manual Shaft (.250" Thick)	1	62-Up	22072	2466842
438D	Manual Shaft (.357" Thick)	1	62-Up	22072A	2466842
SEALING RINGS & KITS					
N.I.	Ring Kit, Complete	1	62-70	22175K	N.L.
N.I.	Ring Kit, Complete	1	71-Up	22175CK	N.L.
FRICTION PLATES					
138A	Direct (.095")	2-4	62-Up	22106	2801167
138A	Direct (.095") (Hi-Energy)	2-4	62-Up	22106A	4617202
138A	Direct (.061") (High Performance)	2-4	62-Up	22106HP	N.L.
210B	Forward (58T)	4	62-Up	22108	2801992
210B	Forward (58T) (High Performance)	4	62-Up	22108HP	N.L.
STEEL PLATES					
136A	Direct (.070")	3	62-Up	22126	52118812AA
136A	Direct (.070") (Kolene)	3	62-Up	22126K	28701K
136A	Direct (.085") (Oversized)	AR	62-Up	22126X	2124826AB
136A	Direct (.085") (Oversized) (Kolene)	AR	62-Up	22126XK	2124826AB
212B	Forward (.070")	4	62-Up	22126	52118812AA
212B	Forward (.070") (Kolene)	4	62-Up	22126K	28701K
212B	Forward (.085") (Oversized)	AR	62-Up	22126X	2124826AB
212B	Forward (.085") (Oversized) (Kolene)	AR	62-Up	22126XK	2124826AB
PRESSURE PLATES					
140A	Direct (Top)	1	62-Up	22146	4617567
140A	Forward (Top)	1	62-Up	22146	4617567
208B	Forward (Bottom) (Beveled)	1	62-Up	22149	2466803

ILL.		Qty.	Year	Part #	Ref. #
FILTERS					
320C	Screen, Governor	1	62-Up	12014	3743519
518E	Small Dacron	1	62-65	12010A	3621456
518E	Small Brass	1	62-65	12010B	3410253
518E	Large Dacron	1	66-Up	12010C	3515996
518E	Large Brass	1	66-Up	12010D	3515996
N.I.	Screen, Valve Body Feed	1	62-Up	12018	3878313
FILTER KITS					
N.I.	Filter Kit, Dacron	1	66-97	12011G	12011GF
BANDS					
124A	Kickdown Flex	1	62-Up	22022A	3681105
124A	Kickdown Flex (High Performance)	1	62-Up	22022C	N.L.
124A	Kickdown Rigid	1	62-Up	22022B	2124342
250B	Reverse (6.00" ID) (12 Roller Sprag)	1	62-89	22024	1942133
250B	Reverse (6.00" ID) (12 Roller Sprag)	1	90-E91	22024A	4505091
250B	Reverse (6.25" ID) (14 Roller Sprag)	1	L91-Up	22024B	4471476AB
BUSHINGS					
N.I.	Bushing Kit	1	62-70	22030	N.L.
N.I.	Bushing Kit	1	71-E92	22030B	N.L.
N.I.	Bushing Kit	1	L92-Up	22030BA	N.L.
102A	Pump (Babbitt)	1	62-Up	22034	2466324
102A	Pump (Bronze)	1	62-Up	22034A	2466324
102A	Pump (w/ Ball Indented Oil Packets)	1	62-Up	22034B	4531163
120A	Stator (Rear)	1	62-66	22037	2205240
120A	Stator (Rear) (1.125" ID)	1	67-95	22037B	2801348
120A	Stator (Rear) (1.250" ID)	1	96-Up	22037C	4617416
128A	Direct Drum (Narrow)	1	62-70	22046	2205241
128A	Direct Drum (w/ Oil Groove)	1	71-Up	22046C	4058647
150A	Input Shaft	1	62-Up	22047	3681709
234B	Sun Gear (.500" Wide) (Front & Rear)	1	62-Up	22052	1736520
234B	Sun Gear (.750" Wide) (Rear)	1	62-Up	22052A	2464381
330C	Extension Housing	1	62-Up	36066	B5AZ-7A034A
THRUST WASHERS/BEARINGS					
WASHERS					
N.I.	Washer Kit	1	67-89	22200A	N.L.
N.I.	Washer Kit	1	90-Up	22200B	N.L.
N.I.	Shim Kit, End Play (Includes 3 Each of .015" & .025" Shims)	1	62-Up	22232AK	N.L.
122A	Stator/Direct Drum (.043")	1	62-Up	22211	2204621
122A	Stator/Direct Drum (.061")	1	62-Up	22211A	2204622
122A	Stator/Direct Drum (.084")	1	62-Up	22211B	2204623
122A	Stator/Direct Drum (.102")	1	62-Up	22211C	2400284
218B	Output Shaft to Forward Drum (No Tab)	1	62-77	22232	2400843
218B	Output Shaft to Forward Drum (3 Tab)	1	78-89	22232A	3681688
220B	Output Shaft 3 Tab .052" (Gray)	1	90-Up	12233D	4505185
220B	Output Shaft 3 Tab .068" (Red)	1	90-Up	12233DA	4505186
220B	Output Shaft 3 Tab .083" (Green)	1	90-Up	12233DB	4505187
242B	3 Gear Planet (3 Tab)	2-4	60-Up	22238	1942081
242B	4 Gear Planet (4 Tab) (2.25" ID)	2-4	94-Up	22238B	4617888
242B	4 Gear Planet (4 Tab) (2.50" ID)	2-4	62-Up	22238A	2801060
242B	5 Gear Planet (5 Tab)	2-4	62-Up	22238D	4539129
246B	Rear Planet to Rear Ring Gear	1	62-Up	22252	2400580
N.I.	Shell to Rear Planet (6 Tab)	1	96-03	22238E	4618000
BEARINGS					
218B	Race, Output Shaft	1	62-Up	12232A	4505188
324C	Bearing, Output Shaft (1.375" ID)	1	62-Up	22272A	2466224
324C	Bearing, Output Shaft (w/ Bolt-On Yoke)	1	62-Up	22272B	1672194
N.I.	Bearing, Case Repair	1	62-Up	22257	22556-BRG

ILL.		Qty.	Year	Part #	Ref. #
ELECTRICAL COMPONENTS					
426D	Neutral Safety Switch (3 Prong Long)	1	68-77	12410	2932820
426D	Neutral Safety Switch (3 Prong Short)	1	78-97	12410A	4057750
N.I.	Solenoid, Lock-Up (TCC) (1 Wire)	1	87-96	12425	4348719
N.I.	Solenoid, Lock-Up (TCC) (2 Wire)	1	97-Up	12425A	52118595
VALVE BODY RECALIBRATION KITS					
N.I.	Shift Kit®, NoYoYo® System Correction Kit, w/ Manual Valve (Transgo®)	1	65-Up	T22165	SK® TFSC
N.I.	Valve Body Kit, (Exc Electronic) (Superior)	1	62-94	S22165	KTF-TC
N.I.	Reprogramming Kit™, HD & Hi-Perf w/ Manual Valve (Transgo®)	1	65-Up	T22169	TF-1
N.I.	Reprogramming Kit™, Race: Back to Low at Any Speed (Transgo®)	1	65-Up	T22171	TF-2
VALVE BODY COMPONENTS					
N.I.	Valve, Pressure Regulator (Modified)	1	62-77	22741PB	N.L.
N.I.	Valve, Pressure Regulator	1	78-Up	22741P	N.L.
N.I.	Valve Kit, Pressure Regulator Sleeve & .200" Plug	1	78-Up	22741FK	N.L.
N.I.	Valve Kit, Pressure Regulator Sleeve & .264" Plug	1	78-Up	22741FAK	N.L.
N.I.	Valve Kit, Throttle	1	78-Up	22741NK	N.L.
N.I.	Valve, Manual w/ TCC	1	78-Up	22741M	N.L.
PUMPS					
112A	Pump, Non Lock-Up	1	67-70	22500	N.L.
112A	Pump, Non Lock-Up	1	71-77	22500A	N.L.
112A	Pump, Non Lock-Up (1.125" ID Rear Stator Bushing)	1	78-Up	22500B	4728912
112A	Pump, Non Lock-Up (1.250" ID Rear Stator Bushing)	1	94-02	22500BA	R4796469AD
112A	Pump, Lock-Up 3 Check Balls (14T/15T)	1	78-93	22500C	R472862AB
PUMP COMPONENTS					
108A	Pump Gears (14T/15T)	1	62-Up	22530	N.L.
108A	Pump Gears (11T/12T)	1	90-Up	22530C	N.L.
108A	Pump Gears (11T/12T) (Oversized)	1	90-Up	22530CA	N.L.
DRUMS & COMPONENTS					
126A	Direct (Front Clutch) 4 Clutch	1	62-70	22555	N.L.
126A	Direct (Front Clutch) 4 Clutch	1	71-Up	22555B	4058648
126A	Direct (Front Clutch) 5 Clutch	1	71-Up	22555C	52854151AA
154A	Clutch Hub, Direct (Non Lock-Up) (w/input)	1	78-90	22575BK	N.L.
154A	Clutch Hub Kit, Direct (Non Lock-Up) (w/input)	1	94-02	22575BBK	N.L.
154A	Clutch Hub Kit, Direct (Lock-Up) (w/input)	1	94-02	22575AK	N.L.
200B	Forward (Rear Clutch Retainer)	1	62-Up	22554	N.L.
204B	Spring, Forward Clutch Disc Spring (Wide Notch)	1	64-73	22974A	1942015
204B	Spring, Forward Clutch Disc Spring (Narrow Notch)	1	74-Up	22974B	3743621
206B	Cushion Spacer, Rear Clutch Spring Spacer (Plastic)	1	62-Up	22853	3515077
206B	Cushion Spacer, Rear Clutch Spring Spacer (Plastic)	1	90-Up	22853	3515077
254B	Reverse (Slide on Race, 12 Roller) (No Washer Under Snap Ring)	1	62-87	22556	4446112
254B	Reverse (Slide on Race, 12 Roller) (Washer Under Snap Ring)	1	88-91	22556A	4505095
254B	Reverse, 14 Roller (Press on Race) 6.250" OD Band Surface	1	90-Up	22556AB	4531242
PLANETS & COMPONENTS					
224B	Front (3 Gear)	1	65-75	22582	N.L.
224B	Front (3 Gear)	1	76-93	22582A	4028110
224B	Front (4 Gear)	1	62-75	22582B	N.L.
228B	Ring Gear, Front Planet (58T)	1	65-02	22592	2892656
244B	Rear (3 Gear)	1	65-Up	22584	2466539
244B	Rear (4 Gear)	1	65-Up	22584A	2801061
248B	Ring Gear, Rear Planet	1	65-02	22594	2538185
SUN GEARS					
236B	Sun Gear, Front/ Rear Planet	1	65-02	22612	2801311
ONE WAY CLUTCHES					
300C	Inner Race, Sprag (For 12 Roller Sprag) Slide On	1	62-87	22664	N.L.
302C	Sprag, Rear Spring & Roller Kits (12 Roller)	1	62-87	22654	2808673
302C	Sprag, Rear Spring & Roller Kits (14 Roller)	1	88-Up	22654A	4617199
304C	Outer Race, Cam (12 Roller Sprag)	1	62-87	22665	1942095
304C	Outer Race Kit, Bolt-In Cam (4 Bolt)	1	66-E90	22665K	1942095
304C	Outer Race Kit, Bolt-In Cam (6 Bolt)	1	L90-Up	22665AK	N.L.

ILL.		Qty.	Year	Part #	Ref. #
SHELLS & SUPPORTS					
232B	Shell, Driving (Uses 3 Tab Washer)	1	65-Up	22622	N.L.
232B	Shell, Driving (Uses 6 Tab Washer)	1	94-Up	22622A	N.L.
312C	Support, Output Shaft (4 Bolt)	1	62-Up	22634	2466882
312C	Support, Output Shaft (6 Bolt)	1	89-Up	22634A	52118245
VALVE BODIES & GOVERNORS					
440D	Valve Body Non Lock-Up	1	78-Up	22740-8	N.L.
440D	Valve Body Lock-Up (No Solenoid)	1	78-Up	22740-9	N.L.
440D	Valve Body Lock-Up (1 Wire Solenoid)	1	87-Up	22740-10	N.L.
440D	Valve Body Lock-Up (2 Wire Solenoid)	1	94-Up	22740-11	N.L.
CASES/HOUSINGS & COMPONENTS					
522E	Pan (3.15" Deep)	1	62-Up	22765B	4428462
SNAP RINGS					
216B	Forward & Direct Clutch (.062")	1	62-Up	22878	1942063
216B	Forward & Direct Clutch (.074")	1	62-Up	22878A	1942064
216B	Forward & Direct Clutch (.088")	1	62-Up	22878B	1942065
216B	Forward & Direct Clutch (.106")	1	62-Up	22878C	2766811
MISCELLANEOUS COMPONENTS					
500E	Strut, Front Band Assembly (Apply Side)	1	62-Up	22916	N.L.
502E	Strut, Band Anchor (Power Wedge)	1	62-Up	22915-3	N.L.
510E	Rear Band Strut Assembly (w/ Solid Type Band)	1	62-Up	22917	N.L.
510E	Band Strut, Oversized (.100 Longer) (For Resurfaced Drums)	1	62-Up	22917B	N.L.
510E	Band Strut, Oversized (.150" Longer) (For Resurfaced Drums)	1	62-Up	22917BA	N.L.
N.I.	Insulator, Detent Lever (Screw In Neutral Switch)	1	70-Up	22993C	N.L.
SERVOS & ACCUMULATORS					
410D	Cover, Front Servo w/ O-Ring	1	90-Up	22909C	22827-01
416D	Piston, Accumulator (In Case)	1	60-Up	22927	22841-04K
420D	Spring, 1-2 Accumulator Return	1	62-Up	22926	3515079
N.I.	Servo Assembly, Kickdown	1	62-Up	22905	N.L.
N.I.	Piston, Super Servo	1	62-Up	22905H	K080
N.I.	Servo Assembly, Reverse Servo (2.812" OD)	1	67-Up	22910	N.L.
N.I.	Pin, Reverse Servo Piston	1	62-Up	12913	22912-01K
TECHNICAL MANUALS					
N.I.	Tech Manual	1	62-Up	12400	83-727904TM

Notes

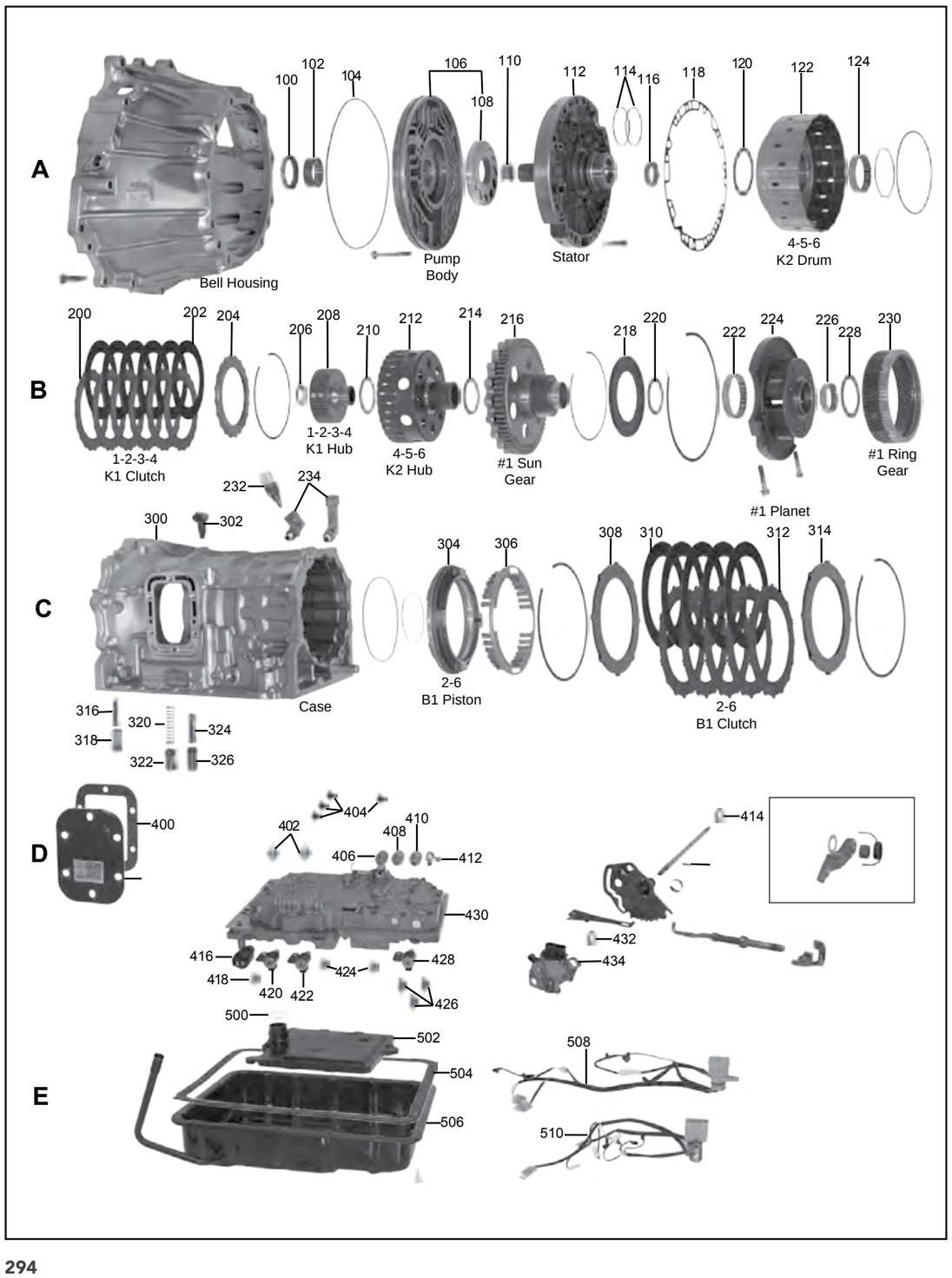
A
100
102
104
106
108
110
112
114
116
118
120
122
124
Bell Housing
Pump Body
Stator
4-5-6 K2 Drum
B
200
202
204
206
208
210
212
214
216
218
220
222
224
226
228
230
1-2-3-4 K1 Clutch
1-2-3-4 K1 Hub
4-5-6 K2 Hub
#1 Sun Gear
#1 Planet
#1 Ring Gear
C
232
234
300
302
304
306
308
310
312
314
316
318
320
322
324
326
Case
2-6 B1 Piston
2-6 B1 Clutch
D
400
402
404
406
408
410
412
414
416
418
420
422
424
426
428
430
432
434
E
500
502
504
506
508
510

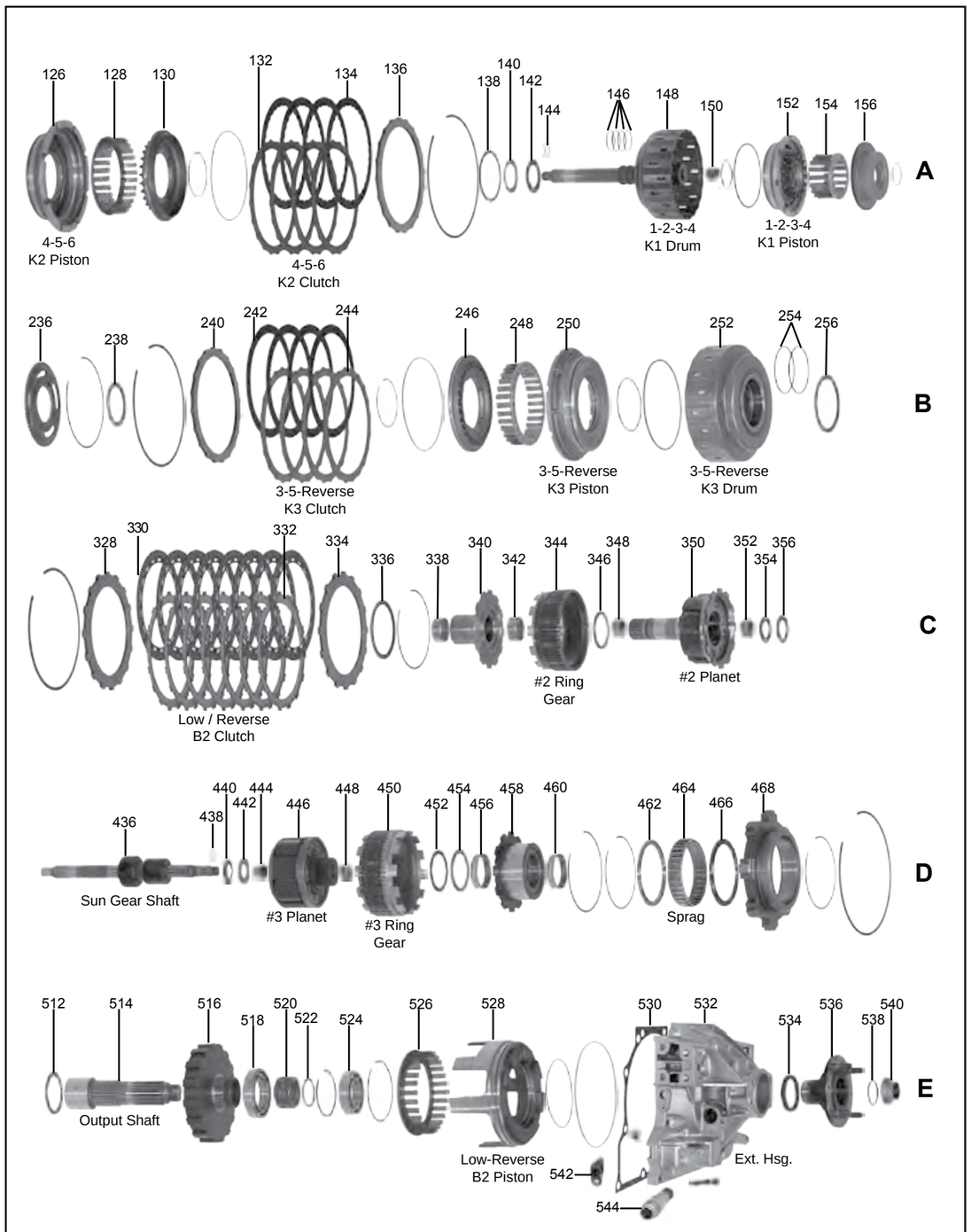
A
126
128
130
132
134
136
138
140
142
144
146
148
150
152
154
156
4-5-6 K2 Piston
4-5-6 K2 Clutch
1-2-3-4 K1 Drum
1-2-3-4 K1 Piston
B
236
238
240
242
244
246
248
250
252
254
256
3-5-Reverse K3 Clutch
3-5-Reverse K3 Piston
3-5-Reverse K3 Drum
C
328
330
332
334
336
338
340
342
344
346
348
350
352
354
356
Low / Reverse B2 Clutch
#2 Ring Gear
#2 Planet
D
436
438
440
442
444
446
448
450
452
454
456
458
460
462
464
466
468
Sun Gear Shaft
#3 Planet
#3 Ring Gear
Sprag
E
512
514
516
518
520
522
524
526
528
530
532
534
536
538
540
542
544
Output Shaft
Low-Reverse B2 Piston
Ext. Hsg.

ILL.		Qty.	Year	Part #	Ref. #
MASTER OVERHAUL KITS (WITH STEELS)					
N.I.	AS68RC (A465) (Except Mitsubishi)	1	06-Up	172006	N.L.
N.I.	AS68RC (A465) (Mitsubishi)	1	06-Up	172006A	N.L.
MASTER OVERHAUL KITS (LESS STEELS)					
N.I.	AS68RC (A465) (Except Mitsubishi)	1	06-Up	172004	N.L.
N.I.	AS68RC (A465) (Mitsubishi)	1	06-Up	172004A	N.L.
OVERHAUL KITS (WITH RINGS AND SEALS)					
N.I.	AS68RC (A465)	1	06-Up	172002	N.L.
BONDED PISTONS					
130A	Retainer, K1 Clutch Balance (Bonded)	1	06-Up	172984	68019773AA
GASKETS & O-RINGS					
104A	O-Ring, Pump	1	06-Up	172311	68019669AA
118A	Gasket, Pump	1	06-Up	172310	68019671AA
400D	PTO Gasket	1-2	06-Up	111319	68020030AA
504E	Gasket, Pan	1	06-Up	172300	68020049AA
530E	Gasket, Extension Housing	1	06-Up	172305	68020050AA
N.I.	Valve Body Gasket Kit	1	06-Up	172320K	N.L.
METAL CLAD SEALS					
100A	Converter	1	06-Up	172070	68019663AA
534E	Rear (2wd)	1	06-Up	172074	68020037AA
534E	Rear (4wd)	1	06-Up	172074A	68020128AA
N.I.	Manual Lever	2	06-Up	60072	68020054AA
SEALING RINGS & KITS					
N.I.	Sealing Ring Kit	1	06-Up	172175K	N.L.
FRICTION PLATES					
134A	K2 (60T) (Except Mitsubishi)	5	06-Up	172100	68019793AA
134A	K2 (32T) (Mitsubishi)	4-5	06-Up	172100A	N.L.
202B	K1	6	06-Up	172108	68019774AA
242B	K3	5	06-Up	172106	68019745AA
310C	B1	5	06-Up	172104	68019839AA
330C	B2	8	06-Up	172114	68019853AA
STEEL PLATES					
132A	K2	5	06-Up	172120	68019747AA
200B	K1	6	06-Up	172128	68019775AA
244B	K3	5	06-Up	172120	68019747AA
312C	B1	4	06-Up	172124	68019838AA
332C	B2	7	06-Up	172134	68019848AA
PRESSURE PLATES					
136A	K2	1	06-Up	172146	N.L.
204B	K1	1	06-Up	172148	N.L.
240B	K3	1	06-Up	172142	N.L.
308C	B1 Apply	AR	06-Up	172150	N.L.
314C	B1 Backing	AR	06-Up	172151	N.L.
330C	B2 Backing	AR	06-Up	172145	N.L.
334C	B2 Apply	AR	06-Up	172144	N.L.
FILTERS					
502E	Filter	1	06-Up	172010	68019688AA
FILTER KITS					
N.I.	Filter Kit	1	06-Up	172011	N.L.
BUSHINGS					
N.I.	Bushing Kit	1	06-Up	172030	N.L.
102A	Pump	1	06-Up	172034	N.L.
150A	Input Shaft	1	06-Up	172047	N.L.
338C	Center Ring Gear Hub (Front)	1	06-Up	172057	N.L.
342C	Center Ring Gear Hub (Rear)	1	06-Up	172059	N.L.

ILL.		Qty.	Year	Part #	Ref. #
BUSHINGS (Cont.)					
348C	Rear Planet	2	06-Up	172058	N.L.
456D	One Way Clutch Inner Race	2	06-Up	172065	N.L.
THRUST WASHERS/BEARINGS					
WASHERS					
120A	Pump	1	06-Up	172211	N.L.
138A	K2 to K1 Drum	1	06-Up	172214	N.L.
BEARINGS					
142A	K1 Drum (Front)	1	06-Up	172228	N.L.
206B	K1 Hub (Front)	1	06-Up	172234	N.L.
210B	K1 Hub (Rear)	1	06-Up	172236	N.L.
214B	K2 Hub (Rear)	1	06-Up	172236B	N.L.
228B	Front Planet (Rear)	1	06-Up	172238	N.L.
238B	Front Planet Ring Gear Hub	1	06-Up	172235	N.L.
256B	K3 Drum to Case	1	06-Up	172231	N.L.
336C	Center Hub (Front)	1	06-Up	172249	N.L.
346C	Center Hub (Rear)	1	06-Up	172249B	N.L.
356C	Sun Gear Shaft (Front)	1	06-Up	172240	N.L.
442D	Sun Gear Shaft (Rear)	1	06-Up	172242	N.L.
452D	Rear Planet (Rear)	1	06-Up	172251	N.L.
454D	One Way Clutch (Inner Rear)	1	06-Up	172227	N.L.
518E	Output Bearing (Large)	1	06-Up	172268B	N.L.
524E	Output Bearing (Small)	1	06-Up	172268	N.L.
N.I.	Output Bearing (Selective)	AR	06-Up	172270	N.L.
N.I.	Rear Planet Shim (Selective)	AR	06-Up	172252	N.L.
ELECTRICAL COMPONENTS					
302C	Sensor, Input Speed (ISS)	1	06-Up	172438	N.L.
402D	Switch, Pressure (1/4" Thread)	3	06-Up	172411A	N.L.
424D	Switch, Pressure (1/8" Thread)	5	06-Up	172411B	N.L.
434D	Switch, MLPS	1	06-Up	172410	N.L.
508E	Harness w/ Large Connector	1	06-Up	172445B	N.L.
510E	Harness w/ Small Connector	1	06-Up	172445A	N.L.
542E	Sensor, Output Speed (OSS)	1	06-Up	172436	N.L.
N.I.	Solenoid, Shift (On / Off)	4	06-Up	172421	N.L.
N.I.	Solenoid, Linear (28013044) (A, C, D)	3	06-Up	172428A	N.L.
N.I.	Solenoid, Linear (28013045) (B)	1	06-Up	172428B	N.L.
N.I.	Sensor, TOT Cooler	1	06-Up	172437	N.L.
N.I.	Harness w/ TOT	1	06-Up	172445D	N.L.
N.I.	Harness w/ Pressure Switch	1	06-Up	172445C	N.L.
PUMPS					
N.I.	Pump Assembly w/ Valve Body	1	06-Up	172500K	68025953AA
N.I.	Pump Assembly	1	06-Up	172500	N.L.
PUMP COMPONENTS					
106A	Pump Body	1	06-Up	172510	N.L.
108A	Pump Gears	1	06-Up	172530	N.L.
112A	Pump Cover	1	06-Up	172520	N.L.
DRUMS & COMPONENTS					
122A	Drum, K2 (4 Clutch)	1	06-Up	172552	68025948AA
126A	Piston, K2	1	06-Up	172962	N.L.
128A	Return Spring, K2	1	06-Up	172972	N.L.
130A	Retainer, K2	1	06-Up	172982	N.L.
148A	Drum, K1 w/ Shaft (6 Clutch)	1	06-Up	172554	68019771AA
152A	Piston, K1	1	06-Up	172964	N.L.
154A	Return Spring, K1	1	06-Up	172974	N.L.
156A	Retainer, K1 Clutch Balance (Bonded)	1	06-Up	172984	68019773AA
208B	Hub, K1	1	06-Up	172574	68019788AA
212B	Hub, K2 (32T Frictions)	1	06-Up	172552A	68025948AA
212B	Hub, K2 (60T Frictions)	1	06-Up	172572	68019785AA
246B	Retainer, K3	1	06-Up	172985	N.L.
248B	Return Spring, K3	1	06-Up	172975	N.L.

ILL.		Qty.	Year	Part #	Ref. #
DRUMS & COMPONENTS (Cont.)					
250B	Piston, K3	1	06-Up	172965	N.L.
252B	Drum, K3 (4 Clutch)	1	06-Up	172555	68019741AA
304C	Piston, B1	1	06-Up	172969	N.L.
306C	Return Spring, B1	1	06-Up	172979	N.L.
526E	Return Spring, B2	1	06-Up	172977	N.L.
528E	Piston, B2	1	06-Up	172967	N.L.
PLANETS & COMPONENTS					
224B	Planet, Front (6 Gear)	1	06-Up	172582	68019892AA
230B	Ring Gear, K1 (6 Gear)	1	06-Up	172592	N.L.
236B	Hub, K1 Ring Gear	1	06-Up	172602	68019867AA
334C	Ring Gear, K2 (4 Gear)	1	06-Up	172595	N.L.
344C	Hub, K2 Ring Gear	1	06-Up	172605	N.L.
350C	Planet, Center (4 Gear)	1	06-Up	172585	68019893AA
446D	Planet, Rear (4 Gear)	1	06-Up	172584	68019894AA
450D	Ring Gear, K3 (4 Gear)	1	06-Up	172594	N.L.
450D	Hub, K3 Ring Gear	1	06-Up	172604	N.L.
SUN GEARS					
216B	Sun Gear, Front w/ PTO	1	06-Up	172612	68019889AB
436D	Sun Gear, Rear	1	06-Up	172615	68019891AA
ONE WAY CLUTCHES					
458D	Inner Race & Hub	1	06-Up	172604	N.L.
464D	Low Sprag	1	06-Up	172652	68019897AA
468D	Sprag Assembly, Low w/ Outer Race	1	06-Up	172642	N.L.
N.I.	Outer Race	1	06-Up	172665	N.L.
SHAFTS					
514E	Output Shaft (2wd)	1	06-Up	172678	68019864AA
514E	Output Shaft (4wd)	1	06-Up	172678A	68020033AA
VALVE BODIES & GOVERNORS					
430D	Valve Body	1	06-Up	172740	N.L.
CASES/HOUSINGS & COMPONENTS					
300C	Case	1	06-Up	172760	N.L.
506E	Pan	1	06-Up	172765	N.L.
532E	Extension Housing (2wd)	1	06-Up	172770	68025947AA
532E	Extension Housing (4wd)	1	06-Up	172770A	68020050AA
MISCELLANEOUS COMPONENTS					
218B	Lube Oil Dam, Front Planet (Bonded)	1	06-Up	172698	N.L.
N.I.	Speedo	1	06-Up	172997	N.L.
SERVOS & ACCUMULATORS					
318C	Accumulator, Piston (Small)	1	06-Up	172927	N.L.
322C	Accumulator, Piston (Medium)	1	06-Up	172932	N.L.
326C	Accumulator, Piston (Large)	1	06-Up	172937	N.L.
TECHNICAL MANUALS					
N.I.	Manual Diagnostic Guide (Isuzu, Mitsubishi, Dodge)	1	06-Up	172400T	AS68RC D

Notes

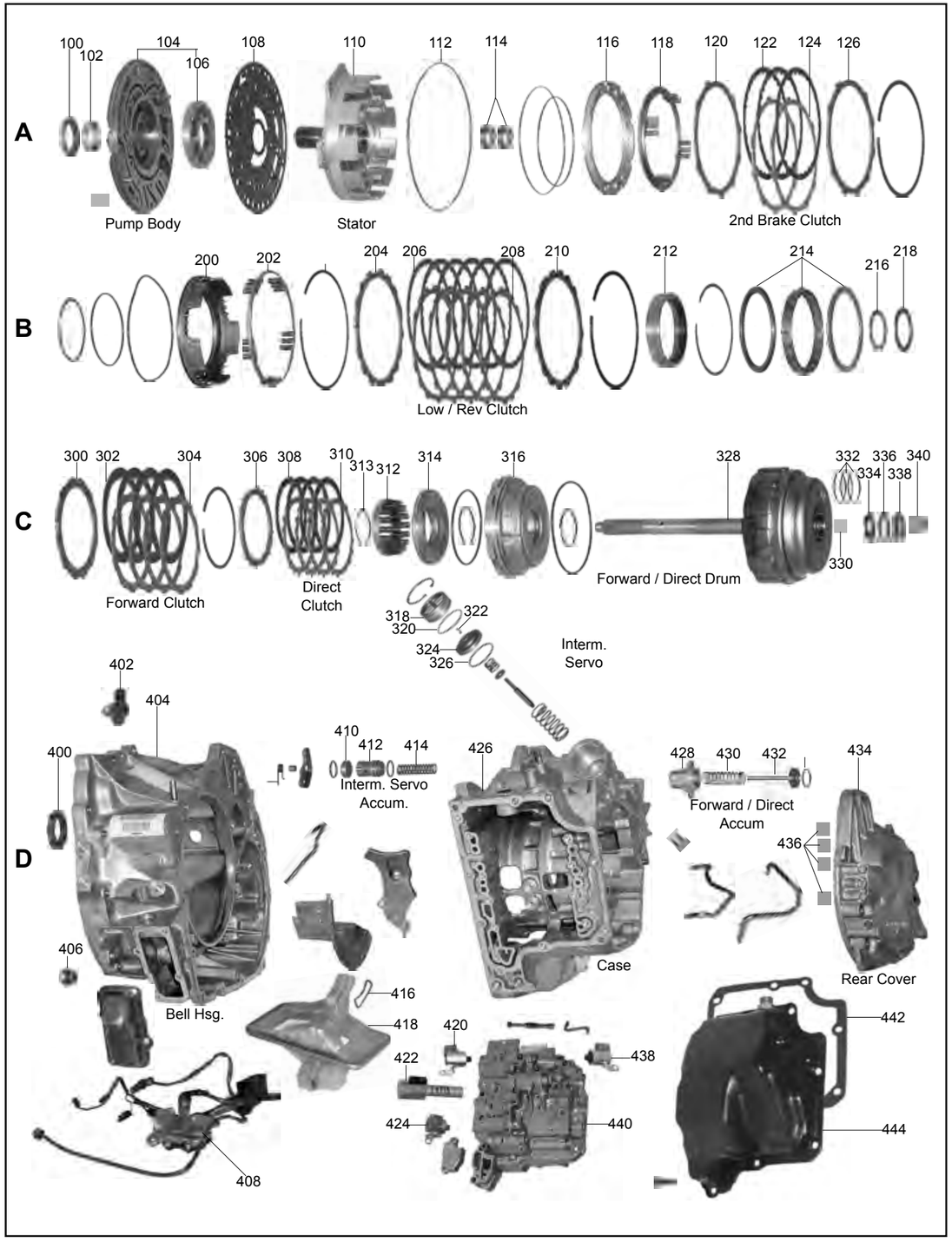
A
B
C
D
100
102
104
106
108
110
112
114
116
118
120
122
124
126
Pump Body
Stator
2nd Brake Clutch
200
202
204
206
208
210
212
214
216
218
Low / Rev Clutch
300
302
304
306
308
310
313
312
314
316
328
330
332
334
336
338
340
Forward Clutch
Direct Clutch
Forward / Direct Drum
318
320
322
324
326
Interm. Servo
402
404
400
410
412
414
Interm. Servo Accum.
426
428
430
432
Forward / Direct Accum
434
436
Rear Cover
406
Bell Hsg.
416
418
420
422
424
438
440
Case
442
444
408

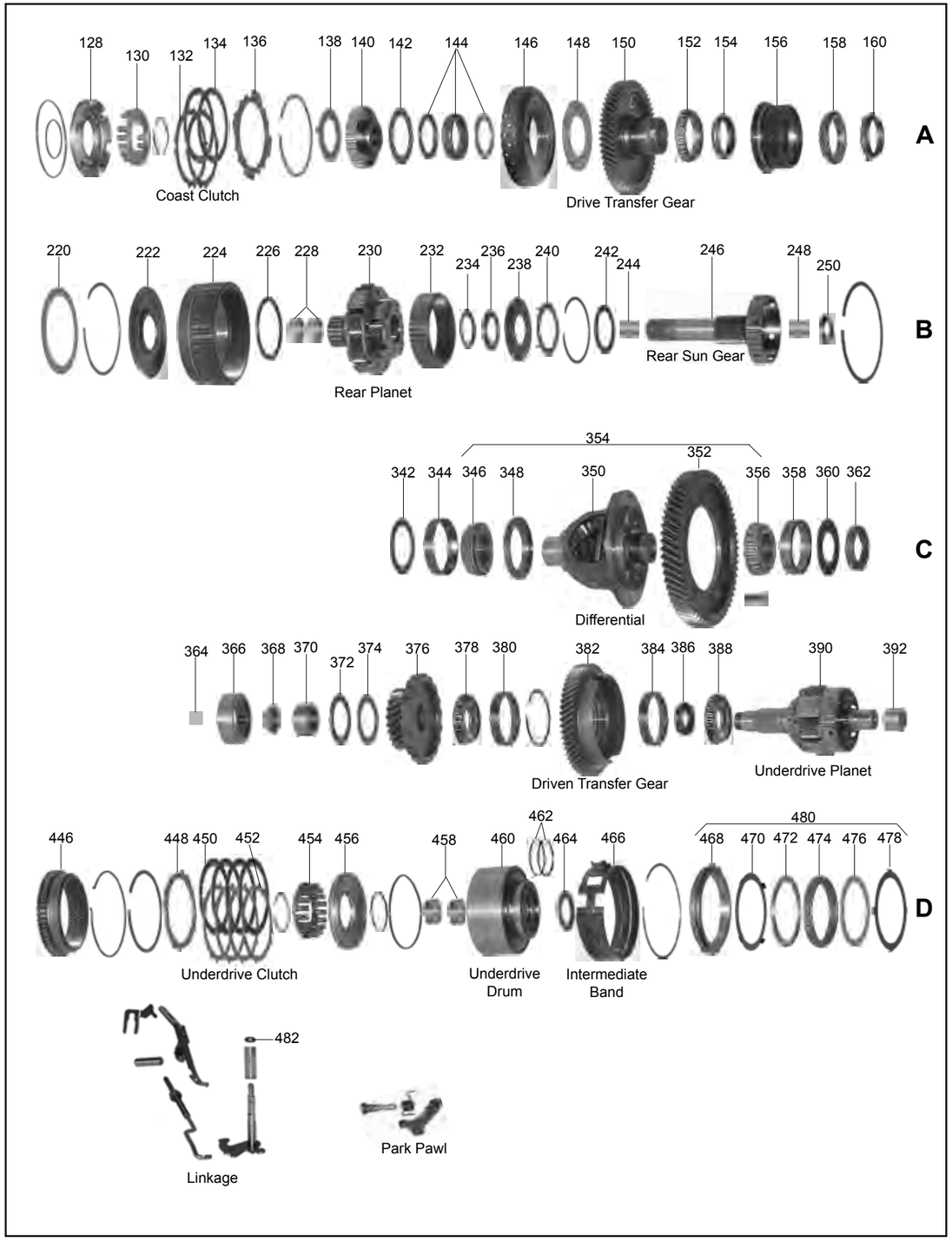
A
B
C
D
128
130
132
134
136
138
140
142
144
146
148
150
152
154
156
158
160
Coast Clutch
Drive Transfer Gear
220
222
224
226
228
230
232
234
236
238
240
242
244
246
248
250
Rear Planet
Rear Sun Gear
354
352
342
344
346
348
350
356
358
360
362
Differential
364
366
368
370
372
374
376
378
380
382
384
386
388
390
392
Driven Transfer Gear
Underdrive Planet
446
448
450
452
454
456
458
460
462
464
466
480
468
470
472
474
476
478
Underdrive Clutch
Underdrive Drum
Intermediate Band
482
Linkage
Park Pawl

ILL.		Qty.	Year	Part #	Ref. #
MASTER OVERHAUL KITS (WITH STEELS)					
N.I.	50-40LE, 50-42LE (AF14-20)	1	89-98	89006A	N.L.
N.I.	50-40LE, 50-42LE (AF14-20) (For 50-42LM, also sell 89104B & 89124B)	1	99-Up	89006B	N.L.
MASTER OVERHAUL KITS (LESS STEELS)					
N.I.	50-40LE, 50-42LE (AF14-20)	1	89-98	89004A	N.L.
N.I.	50-40LE, 50-42LE (AF14-20) (For 50-42LM, also sell 89104B)	1	99-Up	89004B	N.L.
OVERHAUL KITS (WITH RINGS AND SEALS)					
N.I.	50-40LE, 50-42LE (AF14-20)	1	89-Up	89002A	N.L.
GASKETS & O-RINGS					
112A	Pump O-Ring	1	89-Up	89311	N.L.
442D	Gasket, Valve Body Cover	1	89-Up	89300AF	N.L.
METAL CLAD SEALS					
100A	Front Converter Housing	1	89-Up	57070A	90311-38029
362C	Axle (Volvo)	2	89-Up	89076	6843112-1
362C	Axle (Opel, Saab)	2	89-Up	83076C	9707-01-82
SEALING RINGS & KITS					
N.I.	Sealing Ring Kit	1	89-Up	89175K	N.L.
FRICTION PLATES					
122A	2nd Brake (B2) (33T, .067")	3	89-98	89104	90542947
122A	2nd Brake (B2) (40T, .067") (50-42LE)	3-6	99-Up	89104A	DAA04063
122A	2nd Brake (B2) (40T, .075") (50-42LM)	4	99-Up	89104B	N.L.
134A	2nd Coast (B1)	4	89-Up	89106	90348775
206B	Low/ Reverse (B3)	5-6	89-Up	89114	90348808
302C	Forward (C1)	4	89-Up	89108	90542936
308C	Direct (C2) (4.260" OD)	2-4	89-Up	89106	89541961
450D	Underdrive (C3) (4.260" OD)	3-4	89-98	89106	90542422
450D	Underdrive (C3) (4.482" OD)	3-4	99-Up	89106A	DAA05080
STEEL PLATES					
124A	2nd Brake (B2) (.071") (5.538" ID) (50-42LM)	2-4	99-Up	89124B	N.L.
124A	2nd Brake (B2) (.098") (5.661" ID)	2-4	89-98	89124	N.L.
124A	2nd Brake (B2) (.098") (5.538" ID) (50-42LE)	2-4	99-Up	89124A	N.L.
132A	Coast (B1)	2-3	89-Up	89132	N.L.
208B	Low Reverse (B3)	4-5	89-Up	89134	N.L.
304C	Forward (C1)	4	89-Up	89128	N.L.
310C	Direct (C2) (12T)	4	89-Up	89126	N.L.
452D	Underdrive (C3) (8T)	3-4	89-98	89132	N.L.
452D	Underdrive (C3) (18T) (.098")	3-4	99-Up	89132A	N.L.
PRESSURE PLATES					
120A	2nd Brake (B2) (Bottom) (.142")	1	89-Up	89145	N.L.
126A	2nd Brake (B2) (Top) (.149") (10T Stepped)	1	89-Up	89144	N.L.
136A	Coast (B1) (.140") (8T)	1	89-Up	89152	N.L.
204B	Low/ Reverse (B3) (Bottom) (.150")	1	89-Up	89155	N.L.
204B	Low/ Reverse (B3) (Bottom) (.143")	1	89-Up	89155A	N.L.
210B	Low/ Reverse (B3) (Top) (.150")	1	89-Up	89155	N.L.
300C	Forward (C1) (.195") (12T) (Stepped)	1	89-Up	89148	N.L.
300C	Forward (C1) (.150") (12T) (Flat)	1	89-Up	89148B	N.L.
306C	Direct (C2) (.150") (12T)	1	89-Up	89146	N.L.
448D	Underdrive (C3) (18T)	1	89-Up	89142	N.L.
448D	Underdrive (C3) (8T)	1	89-Up	89142A	N.L.
FILTERS					
418D	Filter (Exc. 99-Up SAAB)	1	89-Up	89010A	N.L.
418D	Filter (99-Up SAAB)	1	99-Up	89010B	N.L.
BANDS					
466D	Intermediate (B4)	1	89-Up	89022A	N.L.

ILL.		Qty.	Year	Part #	Ref. #
BUSHINGS					
N.I.	Bushing Kit	1	89-Up	89030A	N.L.
102A	Pump	1	89-Up	57034A	N.L.
114A	Stator (Front)	1	89-Up	89036A	N.L.
114A	Stator (Rear)	1	89-Up	89037A	N.L.
228B	Rear Planet (Front)	1	89-Up	89058A	N.L.
228B	Rear Planet (Rear)	1	89-Up	89058B	N.L.
244B	Sun Gear	2	89-Up	89056A	N.L.
458D	Underdrive Drum	2	89-Up	89040A	N.L.
THRUST WASHERS/BEARINGS					
WASHERS					
N.I.	Washer Kit	1	89-Up	89200A	N.L.
138A	Stator to B1 Hub	1	89-Up	89211A	N.L.
142A	B1 to B2 Hub	1	89-Up	89219A	N.L.
148A	B2 Hub to Output	1	89-Up	89221A	N.L.
BEARINGS					
N.I.	Bearing Kit	1	89-Up	89201A	N.L.
152A	Drive Transfer Gear	2	89-Up	89279A	N.L.
218B	Ring Gear Hub, Front	1	89-Up	89254A	N.L.
226B	Planet, Front	1	89-Up	89251A	N.L.
236B	Rear Planet to Hub	1	89-Up	89238A	N.L.
242B	Hub to Sun Gear (2.545" OD)	1	89-Up	89235A	N.L.
242B	Hub to Sun Gear (2.690" OD)	1	89-Up	89235AA	N.L.
250B	Sun Gear to C1 Bearing (1.645" OD)	1	89-Up	89234A	N.L.
250B	Sun Gear to C1 Bearing (1.700" OD)	1	89-Up	89234AA	N.L.
336C	Drum to End Cover	1	89-Up	89232	N.L.
346C	Differential Bearing (Speed O Side)	1	89-Up	89292A	N.L.
356C	Differential Bearing (Ring Gear Side)	1	89-Up	89289A	N.L.
366C	Bell Housing Bearing	1	89-Up	89283A	N.L.
370C	Bell Housing Race	1	89-Up	89282A	N.L.
372C	Pinion to Bell	1	89-Up	89274A	N.L.
374C	Pinion to Bell Race	1	89-Up	89273A	N.L.
378C	Driven Transfer Gear (26 Rollers)	1	89-Up	89281A	N.L.
378C	Driven Transfer Gear (27 Rollers)	1	89-Up	89281AA	N.L.
380C	Driven Transfer Gear Race (.470" Thick)	1	89-Up	89280A	N.L.
380C	Driven Transfer Gear Race (.510" Thick)	1	89-Up	89280AA	N.L.
392C	Underdrive Planet to Case Caged Bearing	1	89-Up	89284A	N.L.
464D	Underdrive Drum to Case Bearing (1.345" ID)	1	89-Up	89260A	N.L.
464D	Underdrive Drum to Case Bearing (1.435" ID)	1	89-Up	89260AA	N.L.
N.I.	End Cover (Caged)	1	89-Up	89263	N.L.
ELECTRICAL COMPONENTS					
402D	Sensor, Input/Output	2	89-Up	89438A	N.L.
408D	Harness w/ 11 Wire Connector	1	89-Up	89446	N.L.
408D	Harness w/ 17 Pin Connector	1	89-Up	89446A	N.L.
420D	Solenoid, Shift "A" & "B"	2	89-Up	89421	N.L.
422D	Solenoid, EPC (Linear)	1	89-Up	89431	N.L.
424D	Solenoid, Lockup (TCC)	1	89-Up	89425	N.L.
N.I.	Switch, MLPS	1	89-Up	89410	N.L.
PUMPS					
N.I.	Pump	1	89-Up	89500	N.L.
PUMP COMPONENTS					
104A	Pump Body	1	89-Up	89510	N.L.
106A	Pump Gears	1	89-Up	89530	N.L.
108A	Pump Plate	1	89-Up	89544	N.L.
110A	Pump Cover	1	89-Up	89520	N.L.
DRUMS & COMPONENTS					
116A	Piston, B2	1	89-Up	89962	N.L.
118A	Return Spring, B2	1	89-Up	89982	N.L.
140A	Hub, Coast (0.886" Tall)	1	89-Up	89579A	N.L.
140A	Hub, Coast (1.060" Tall)	1	89-Up	89579	N.L.

ILL.		Qty.	Year	Part #	Ref. #
DRUMS & COMPONENTS (Cont.)					
146A	Hub, 2nd/Coast (33 Splines)	1	89-Up	89572	N.L.
146A	Hub, 2nd/Coast (40 Splines)	1	89-Up	89572A	N.L.
200B	Piston, B3	1	89-Up	89967	N.L.
202B	Return Spring, B3	1	89-Up	89987	N.L.
312C	Return Spring, C2	1	89-Up	89985	N.L.
314C	Piston, C2	1	89-Up	89965	N.L.
316C	Piston, C1	1	89-Up	89964	N.L.
328C	Drum, C1 / C2 (20 Splines)	1	89-Up	89554A	N.L.
328C	Drum, C1 / C2 (26 Splines)	1	89-Up	89554	N.L.
454D	Return Spring, C3	1	89-Up	89981	N.L.
456D	Piston, C3	1	89-Up	89961	N.L.
460D	Drum, Underdrive (3 Clutch, 18T Steels)	1	89-98	89551	N.L.
460D	Drum, Underdrive (4 Clutch, 8T Steels)	1	99-Up	89551A	N.L.
PLANETS & COMPONENTS					
222B	Ring Gear Hub, Front (69T Steel)	1	89-Up	89602	N.L.
222B	Ring Gear Hub, Front (69T Stamped)	1	89-Up	89602A	N.L.
224B	Ring Gear, Front w/ Hub (68T, 46 Lugs)	1	89-Up	89592	N.L.
230B	Planet, Rear (4 Gear, 19T Pinion Gears)	1	89-Up	89584A	N.L.
232B	Ring Gear, Rear w/ Hub (99T, 33 Lugs)	1	89-Up	89594	N.L.
238B	Ring Gear Hub, Rear (99T)	1	89-Up	89604	N.L.
390C	Planet, Underdrive (7.625")	1	89-Up	89586	N.L.
390C	Planet, Underdrive (7.750")	1	89-Up	89586C	N.L.
390C	Planet, Underdrive (8.250")	1	89-Up	89586A	N.L.
446D	Ring Gear, Underdrive (1.075" Thick)	1	89-Up	89596	N.L.
446D	Ring Gear, Underdrive (1.235" Thick)	1	89-Up	89596A	N.L.
ONE WAY CLUTCHES					
144A	Sprag, F1 (Intermediate)	1	89-Up	97652	35790-30030
214B	Roller Clutch F2 (Low)	1	89-Up	89654	N.L.
214B	Sprag, F2 (Low)	1	89-Up	67654A	35792-32020
474D	Sprag Assembly, Underdrive (32 Elements)	1	89-Up	89641	N.L.
VALVE BODIES & GOVERNORS					
440D	Valve Body	1	98-Up	89740-5	N.L.
DIFFERENTIALS					
150A	Drive Gear	1	89-Up	89710	N.L.
354C	Differential Assemblies (61T, 5 ID Grooves)	1	89-Up	89715A	N.L.
354C	Differential Assemblies (61T, 6 ID Grooves)	1	89-Up	89715AA	N.L.
354C	Differential Assemblies (63T, No ID Grooves)	1	89-Up	89715	N.L.
354C	Differential Assemblies (69T, Awd)	1	89-Up	89715B	N.L.
382C	Driven Gear	1	89-Up	89712	N.L.
CASES/HOUSINGS & COMPONENTS					
404D	Bell Housing (Saab)	1	89-Up	89750A	N.L.
426D	Case (Saab)	1	89-Up	89760AB	N.L.
434D	Cover (End)	1	89-Up	89759	N.L.
444D	Pan, Side (Aluminum)	1	89-Up	89766	N.L.
444D	Pan, Side (Tin)	1	89-Up	89766A	N.L.
MISCELLANEOUS COMPONENTS					
348C	Speedo Gear (26T)	1	89-Up	89847	N.L.
348C	Speedo Sensor (48T)	1	89-Up	89847A	N.L.
376C	Pinion Gear (23T)	1	89-Up	89730A	N.L.
376C	Pinion Gear (24T)	1	89-Up	89730AA	N.L.
376C	Pinion Gear (27T)	1	89-Up	89730AB	N.L.
SERVOS AND ACCUMULATORS					
N.I.	Servo Assembly, Intermediate	1	89-Up	89905	N.L.
N.I.	Accumulator Assembly, Intermediate	1	89-Up	89925	N.L.
N.I.	Accumulator Assembly, Forward & Direct (50-40)	1	89-Up	89930	N.L.
N.I.	Accumulator Assembly, Forward & Direct (50-42)	1	89-Up	89930A	N.L.
TECHNICAL MANUALS					
N.I.	Tech Guide	1	89-Up	89400A	50-42LE

Notes

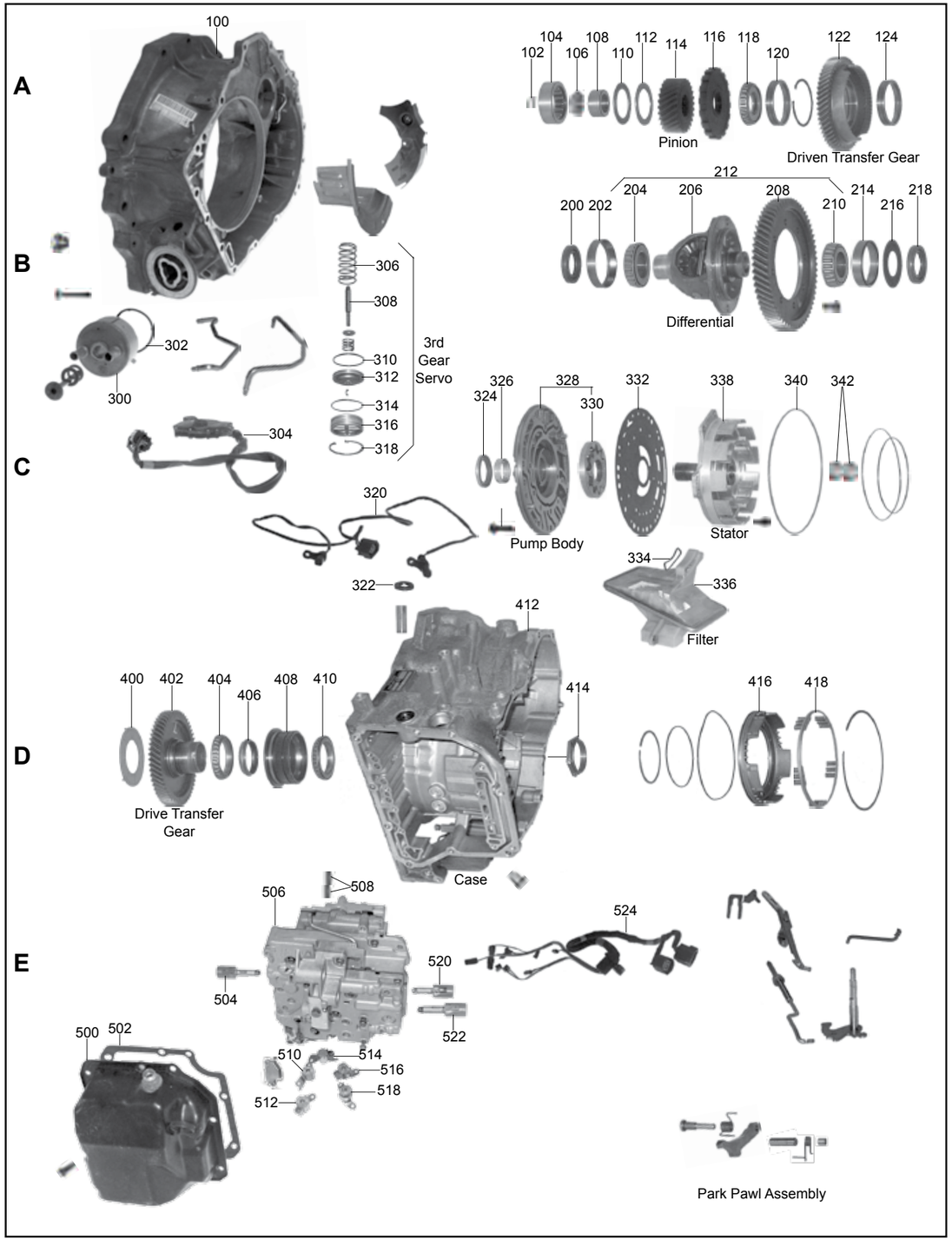
A
B
C
D
E
100
102
104
106
108
110
112
114
116
118
120
122
124
Pinion
Driven Transfer Gear
200
202
204
206
208
210
212
214
216
218
Differential
300
302
304
306
308
310
312
314
316
318
3rd Gear Servo
320
322
324
326
328
330
332
334
336
338
340
342
Pump Body
Stator
Filter
400
402
404
406
408
410
412
414
416
418
Drive Transfer Gear
Case
500
502
504
506
508
510
512
514
516
518
520
522
524
Park Pawl Assembly

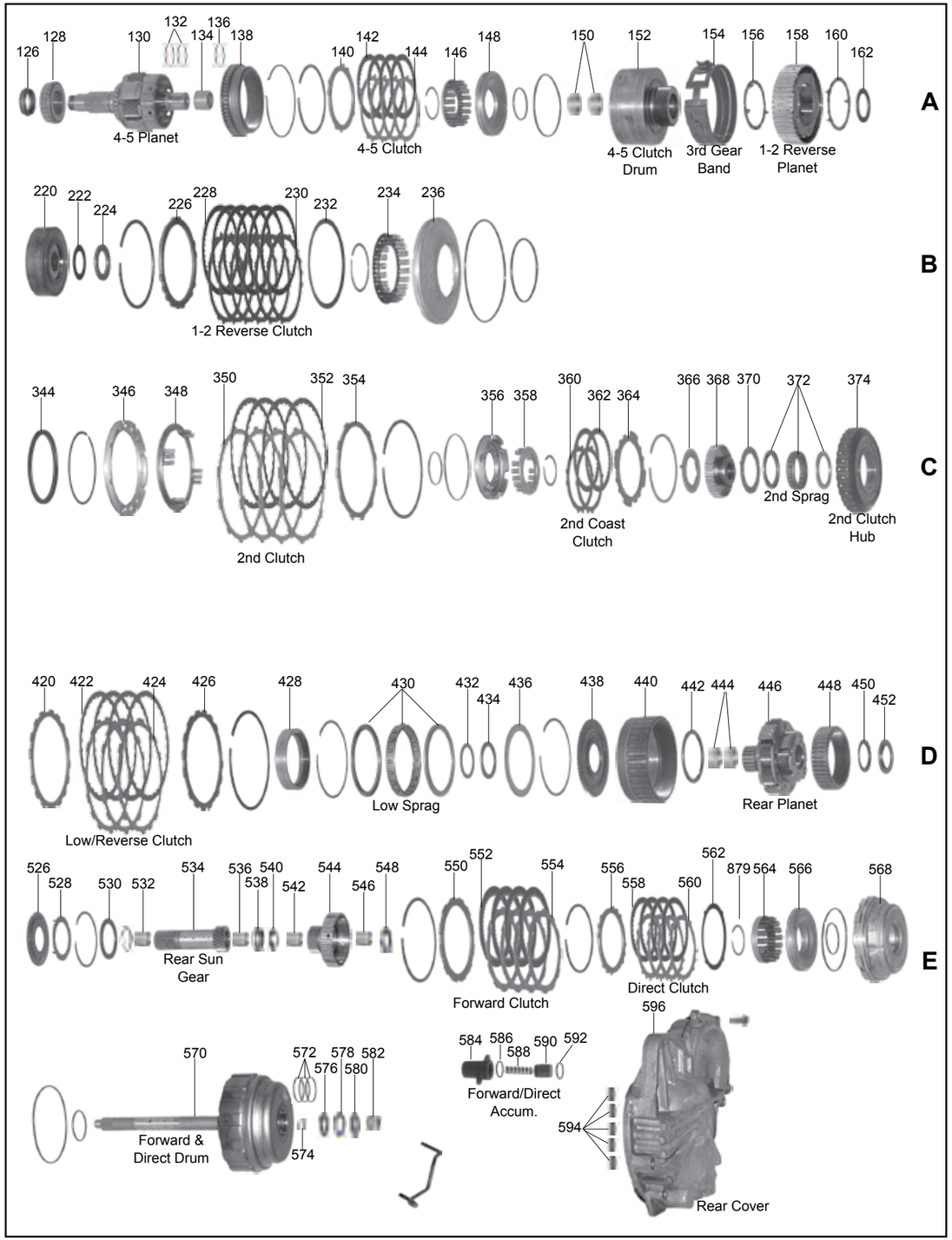
A
B
C
D
E
126
128
130
132
134
136
138
140
142
144
146
148
150
152
154
156
158
160
162
4-5 Planet
4-5 Clutch
4-5 Clutch Drum
3rd Gear Band
1-2 Reverse Planet
220
222
224
226
228
230
232
234
236
1-2 Reverse Clutch
344
346
348
350
352
354
356
358
360
362
364
366
368
370
372
374
2nd Clutch
2nd Coast Clutch
2nd Sprag
2nd Clutch Hub
420
422
424
426
428
430
432
434
436
438
440
442
444
446
448
450
452
Low/Reverse Clutch
Low Sprag
Rear Planet
526
528
530
532
534
536
538
540
542
544
546
548
550
552
554
556
558
560
562
879
564
566
568
Rear Sun Gear
Forward Clutch
Direct Clutch
570
572
574
576
578
580
582
Forward & Direct Drum
584
586
588
590
592
Forward/Direct Accum.
594
596
Rear Cover

ILL.		Qty.	Year	Part #	Ref. #
MASTER OVERHAUL KITS (WITH STEELS)					
N.I.	AW 55-50SN, AW55-51SN (AF33-5, RE5F22A)	1	01-Up	89006C	N.L.
MASTER OVERHAUL KITS (LESS STEELS)					
N.I.	AW 55-50SN, AW55-51SN (AF33-5, RE5F22A)	1	01-Up	89004C	N.L.
OVERHAUL KITS (WITH RINGS AND SEALS)					
N.I.	AW 55-50SN, AW55-51SN (AF33-5, RE5F22A)	1	01-Up	89002C	N.L.
GASKETS & O-RINGS					
N.I.	Gasket, Valve Body Cover	1	01-Up	89300BF	N.L.
N.I.	Pump O-Ring	1	01-Up	89311	N.L.
N.I.	Valve Body Gasket Kit	1	01-Up	89320K	N.L.
METAL CLAD SEALS					
200B	Axle, Right (Opel, 2wd Saturn)	1	02-Up	83076C	9707-01-82
200B	Axle, Right (Nissan)	1	03-Up	89076	6843112-1
200B	Axle, Right (2wd Volvo)	1	01-Up	89076B	N.L.
200B	Axle, Right (Awd Volvo)	1	01-Up	89076A	N.L.
200B	Axle, Right (Awd Saturn, Awd Equinox)	1	02-Up	89076C	N.L.
200B	Axle, Right (2wd Equinox)	1	05-09	89076D	N.L.
218B	Axle, Left (Opel, Saturn, Equinox)	1	02-Up	83076C	N.L.
218B	Axle, Left (Nissan, Volvo)	1	03-Up	89076	6843112-1
324C	Front	1	01-Up	57070A	90311-38029
SEALING RINGS & KITS					
N.I.	Sealing Ring Kit	1	01-Up	89175CK	N.L.
FRICTION PLATES					
142A	4-5 Clutch (C3)	4	01-Up	89106A	24220778
228B	1-2 & Reverse (B5)	6	01-Up	89102	24220563
352C	2nd Brake (B2)	3-4	01-Up	89104A	24220537
362C	Coast (B1)	3	01-Up	89106	24220648
422D	Low/ Reverse (B3)	4-5	01-Up	89114	90348808
552E	Forward (C1)	4	01-Up	89108A	24220650
558E	Direct (C2) (.059")	4	01-Up	89106B	24228586
558E	Direct (C2) (.067")	4	01-Up	89106C	N.L.
STEEL PLATES					
144A	4-5 Clutch (C3)	4	01-Up	89126A	N.L.
230B	1-2 & Reverse (B5)	6	01-Up	89122	31666-8Y011
350C	2nd Brake (B2)	2-4	01-Up	89124B	31536-8Y010
360C	Coast (B1)	3	01-Up	89132	31536-8Y000
424D	Low/ Reverse (B3)	3-4	01-Up	89134A	31666-8Y000
554E	Forward (C1)	4	01-Up	89128A	N.L.
560E	Direct (C2)	4	01-Up	89126	N.L.
PRESSURE PLATES					
140A	4-5 Clutch (C3)	1	01-Up	89140	N.L.
226B	1-2 & Reverse (B5)	1	01-Up	89142	N.L.
354C	2nd Brake (B2) (Top) (.149") (10T Stepped)	1	01-Up	89144	N.L.
364C	Coast (B1) (12 Spring Guides)	1	01-Up	89152	N.L.
364C	Coast (B1) (8 Spring Guides)	1	01-Up	89152A	N.L.
426D	Low/ Reverse (B3) (.175" Thick)	1	01-Up	89155B	N.L.
426D	Low/ Reverse (B3) (.150" Thick)	1	01-Up	89155BA	N.L.
550E	Forward (C1) (.195") (12T) (Stepped)	1	01-Up	89148	N.L.
550E	Forward (C1) (.150") (12T) (Flat)	1	01-Up	89148B	N.L.
556E	Direct (C2) (.150") (12T)	1	01-Up	89146	N.L.
N.I.	2nd Brake (B2) (Bottom) (.142")	1	01-Up	89145	N.L.
FILTERS					
336C	Filter w/ Rib	1	01-Up	89010C	N.L.
336C	Filter w/o Rib	1	01-Up	89010D	N.L.
BANDS					
154A	Band, B4	1	01-Up	89022C	31630-8Y000

ILL.		Qty.	Year	Part #	Ref. #
BUSHINGS					
N.I.	Bushing Kit (.843" Diameter Input)	1	01-Up	89030D	N.L.
N.I.	Bushing Kit (.873" Diameter Input)	1	01-Up	89030C	N.L.
150A	4-5 Clutch Drum	1	01-Up	89040C	N.L.
326C	Pump	1	01-Up	57034A	N.L.
342C	Stator (Front)	1	01-Up	89036C	N.L.
342C	Stator (Rear) (Grooved)	1	01-Up	89037C	N.L.
444D	Planet (Front)	1	01-Up	89053C	N.L.
444D	Planet (Rear)	1	01-Up	89058C	N.L.
532E	Sun Gear (1 Piece Design) (Small Diameter)	1	01-Up	89052CA	N.L.
532E	Sun Gear (1 Piece Design) (Large Diameter)	1	01-Up	89052CB	N.L.
532E	Sun Gear (2 Piece Design) (Small Diameter)	2	01-Up	89052CA	N.L.
532E	Sun Gear (2 Piece Design) (Large Diameter)	2	01-Up	89052CB	N.L.
THRUST WASHERS/BEARINGS					
WASHERS					
N.I.	Thrust Washer Kit	1	01-Up	89200C	N.L.
156A	B5 (Reverse) Planet	2	01-Up	89246C	N.L.
366C	Stator to Sprag Race (Metal)	1	01-Up	89211C	N.L.
370C	B1/B2 Hub	1	01-Up	89219C	N.L.
400D	B1 Drum to Drive Transfer Gear	1	01-Up	89221C	N.L.
436D	Ring Gear (Front)	1	01-Up	89256C	N.L.
BEARINGS					
N.I.	Underdrive Planet Bearing	2	01-Up	89202C	N.L.
N.I.	Underdrive Planet Race	2	01-Up	89203C	N.L.
110A	Pinion Front Bearing	1	01-Up	89268C	N.L.
112A	Pinion Front Race	1	01-Up	89269C	N.L.
162A	B5 Ring Gear Front Bearing	1	01-Up	89222C	N.L.
204B	Differential Tapered Bearing & Race (Large)	1	01-Up	89288CK	N.L.
210B	Differential Tapered Bearing & Race (Small)	1	01-Up	89289CK	N.L.
222B	B5 Ring Gear Rear Bearing	1	01-Up	89223C	N.L.
404D	Output Gear Bearing	2	01-Up	89283C	N.L.
432D	Ring Gear Hub (Front) Race	1	01-Up	89255C	N.L.
434D	Ring Gear Front Bearing	1	01-Up	89254C	N.L.
434D	Ring Gear Rear Bearing	1	01-Up	89254CA	N.L.
450D	Planet Rear Bearing	1	01-Up	89251C	N.L.
452D	Planet Rear Race (1.710" ID)	1	01-Up	89252C	N.L.
452D	Planet Rear Race (1.795" ID)	1	01-Up	89252CA	N.L.
538E	Sun Gear to Sun Gear Race	1	01-Up	89240C	N.L.
540E	Sun Gear to Sun Gear Bearing	1	01-Up	89241C	N.L.
548E	Sun Gear to C1 Drum Bearing	1	01-Up	89242C	N.L.
576E	C1 Drum Race	1	01-Up	89262C	N.L.
578E	C1 Drum Bearing	1	01-Up	89260C	N.L.
580E	End Cover Race	1	01-Up	89261C	N.L.
N.I.	Rear Ring Gear Bearing	1	01-Up	89248C	N.L.
N.I.	Rear Ring Gear Race	1	01-Up	89253C	N.L.
N.I.	Output Gear Race	2	01-Up	89282C	N.L.
ELECTRICAL COMPONENTS					
320C	Sensor, Output Speed (OSS)	1	01-Up	89436C	N.L.
320C	Sensor, Input Speed (ISS)	1	01-Up	89438C	N.L.
504E	Solenoid, Linear (SLU)	1	01-Up	89428	N.L.
510E	Solenoid, Shift (S1) (No Code or Code A)	1	01-03	89421A	N.L.
510E	Solenoid, Shift (S1) (Code B or Code C)	1	02-Up	89421B	N.L.
512E	Solenoid, Shift (S2) (Volvo, Nissan) (w/ Flat Top)	1	01-Up	89421C	N.L.
512E	Solenoid, Shift (S2) (GM, Saab, Saturn) (w/ Domed Top)	1	02-Up	89421D	N.L.
514E	Solenoid, Shift (S3) (All)	1	01-Up	89421E	N.L.
516E	Solenoid, Shift (S4) (All)	1	01-Up	89421	N.L.
518E	Solenoid, Shift (S5) (All)	1	01-Up	89421G	N.L.
520E	Solenoid, Linear (SLS) (No Code or Code A)	1	01-03	89428B	N.L.
520E	Solenoid, Linear (SLS) (Code B or Code C)	1	02-Up	89428D	N.L.
522E	Solenoid, Linear (SLT) (No Code or Code A)	1	01-03	89428A	N.L.
522E	Solenoid, Linear (SLT) (Code B or Code C)	1	02-Up	89428E	N.L.
524E	Harness w/ Connector	1	01-Up	89445C	N.L.

ILL.		Qty.	Year	Part #	Ref. #
ELECTRICAL COMPONENTS (Cont.)					
N.I.	Switch, MLPS	1	01-Up	89410C	N.L.
N.I.	Solenoid Kit, Linear (SLT, SLS) w/ Bracket	1	01-Up	89428CK	N.L.
N.I.	Solenoid Kit, Linear (SLU, SLT, SLS) w/ Bracket	1	01-Up	89428K	N.L.
VALVE BODY RECALIBRATION KITS					
N.I.	Shift Kit®, AW55-50SN	1	01-Up	T89165C	SK® AW55-50
PUMPS					
328C	Pump Assembly (8 Guide Type) (.870" Bushing ID)	1	01-Up	89500BA	N.L.
328C	Pump Assembly (12 Guide Type) (.840" Bushing ID)	1	01-Up	89500B	N.L.
328C	Pump Assembly (12 Guide Type) (.870" Bushing ID)	1	01-Up	89500BB	N.L.
PUMP COMPONENTS					
330C	Pump Gears	1	01-Up	89530B	N.L.
332C	Pump Plate	1	01-Up	89544B	N.L.
DRUMS & COMPONENTS					
146A	Return Spring, C3	1	01-Up	89970B	N.L.
148A	Piston, C3	1	01-Up	89960B	N.L.
152A	Drum, 4-5 (C3) (4 Clutch) (32T / 50T Sun Gears)	1	01-Up	89551B	N.L.
232B	Cushion, B5	1	01-Up	89851	N.L.
234B	Return Spring, B5	1	01-Up	89971B	N.L.
236B	Piston, B5	1	01-Up	89961B	N.L.
346C	Piston, B2	1	01-Up	89962B	N.L.
348C	Return Spring, B2 (12 Springs)	1	01-Up	89972BA	N.L.
348C	Return Spring, B2 (8 Springs)	1	01-Up	89972BA	N.L.
356C	Piston, B1	1	01-Up	89969B	N.L.
358C	Return Spring, B1	1	01-Up	89979B	N.L.
368C	Hub, B1 (40T)	1	01-Up	89579B	N.L.
374C	Hub, B2 (Metal Washer Type)	1	01-Up	89572B	N.L.
374C	Hub, B2 (Plastic Washer Type)	1	01-Up	89572BA	N.L.
416D	Piston, B3	1	01-Up	89967B	N.L.
418D	Return Spring, B3	1	01-Up	89977B	N.L.
562E	Cushion, C2	1	01-Up	89858	N.L.
564E	Return Spring, C2	1	01-Up	89975B	N.L.
566E	Piston, C2	1	01-Up	89965B	N.L.
568E	Piston, C1	1	01-Up	89964B	N.L.
570E	Drum, Fwd/Dir (C1/C2) (.840" Bushing ID)	1	01-Up	89554B	N.L.
570E	Drum, Fwd/Dir (C1/C2) (.870" Bushing ID)	1	01-Up	89554BA	N.L.
PLANETS & COMPONENTS					
130A	Planet, 4-5 (25T, 1 Groove Pinion Gear)	1	01-Up	89586B	N.L.
130A	Planet, 4-5 (23T, 6 Groove Pinion Gear)	1	01-Up	89586BA	N.L.
130A	Planet, 4-5 (23T, 3 Groove Pinion Gear)	1	01-Up	89586BB	N.L.
138A	Ring Gear, 4-5 (67T)	1	01-Up	89596B	N.L.
158A	Planet, Reverse/ 1-2 (5 Gear)	1	01-Up	89587B	N.L.
220B	Ring Gear, Rev/1-2 (82T) (.120" Deep Bearing Pocket)	1	01-Up	89597BA	N.L.
220B	Ring Gear, Rev/1-2 (82T) (.150" Deep Bearing Pocket)	1	01-Up	89597BB	3507555A040
438D	Hub, Front Ring Gear (99T)	1	01-Up	89607B	N.L.
438D	Hub, Front Ring Gear (87T)	1	01-Up	89607BA	N.L.
440D	Ring Gear, Front (87T) (Roller Clutch Type)	1	01-Up	89594BA	N.L.
440D	Ring Gear Kit, Front (99T) (Sprag Type)	1	01-Up	89594BAK	3574055A040
446D	Planet, Rear (1 Piece, 27T Sun Gear)	1	01-Up	89584BA	N.L.
446D	Planet, Rear (2 Piece, 25T Sun Gear)	1	01-Up	89584B	3572055A110
448D	Ring Gear, Rear (83T)	1	01-Up	89592B	3576155A010
448D	Ring Gear, Rear (87T)	1	01-Up	89592BA	N.L.
526E	Hub, Rear Ring Gear (83T)	1	01-Up	89602B	N.L.
SUN GEARS					
534E	Sun Gear, Rear (1 Piece, .840" Bushing ID)	1	01-Up	89614BA	N.L.
534E	Sun Gear, Rear (1 Piece, .870" Bushing ID)	1	01-Up	89614BC	N.L.
534E	Sun Gear, Rear (2 Piece, .840" Bushing ID)	1	01-Up	89614B	N.L.
534E	Sun Gear, Rear (2 Piece, .870" Bushing ID)	1	01-Up	89614BB	N.L.
544E	Sun Gear Hub, Direct (.840" Bushing)	1	01-Up	89612B	N.L.
544E	Sun Gear Hub, Direct (.870" Bushing)	1	01-Up	89612BA	N.L.

ILL.		Qty.	Year	Part #	Ref. #
ONE WAY CLUTCHES					
372C	Sprag (F1)	1	01-Up	89652	N.L.
430D	Roller Clutch, Low (F2)	1	01-Up	89654	N.L.
430D	Sprag, Low (F2)	1	01-Up	67654A	35792-32020
VALVE BODIES & GOVERNORS					
506E	Valve Body (Saturn, Saab) (No Code, A Code)	1	02-E03	89740-1	N.L.
506E	Valve Body (Saturn, Saab, GM) (B or C Code)	1	L03-Up	89740-2	N.L.
506E	Valve Body (Volvo) (No Code, A Code)	1	99-E01	89740-3	N.L.
506E	Valve Body (Volvo) (B or C Code)	1	L01-Up	89740-4	N.L.
506E	Valve Body (Nissan) (B or C Code)	1	2004	89740-4	N.L.
506E	Valve Body (Nissan) (B or C Code)	1	05-Up	89740-6	N.L.
DIFFERENTIALS					
212B	Differential Assembly (61T, 1 ID Groove)	1	01-Up	89715CA	N.L.
212B	Differential Assembly (61T, 3 ID Grooves) (Awd)	1	01-Up	89715CB	N.L.
212B	Differential Assembly (69T, 5 ID Grooves) (Awd)	1	01-Up	89715C	N.L.
CASES/HOUSINGS & COMPONENTS					
100A	Bell Housing (GM) (2.145" OD Axle Seal) (Cast # 9191)	1	01-Up	89750BB	N.L.
100A	Bell Housing (Saturn) (2.400" OD Axle Seal) (Cast # 9194)	1	01-Up	89750BC	N.L.
100A	Bell Housing (Volvo) (2.480" OD Axle Seal) (3" Top Bolts)	1	01-Up	89750BA	N.L.
100A	Bell Housing (Volvo) (2.958" OD Axle Seal) (5" Top Bolts) (Cast # 9165)	1	01-Up	89750B	N.L.
412D	Case (GM) (Brown Tag) (No Bosses above Axles)	1	01-Up	89760BB	N.L.
412D	Case (Saturn) (Tan Tag) (No Bosses above Axles)	1	01-Up	89760BC	N.L.
412D	Case (Volvo) (Black Tag) (3 Bosses above Axles)	1	01-Up	89760B	N.L.
412D	Case (Volvo) (Red Tag)	1	01-Up	89760BA	N.L.
500E	Pan, Side (Volvo)	1	01-Up	89766B	N.L.
500E	Pan, Side (GM, No Vent)	1	01-Up	89766BC	N.L.
596E	Cover (End)	1	01-Up	89759B	N.L.
MISCELLANEOUS COMPONENTS					
106A	Pinion Shaft Nut	1	01-Up	89796B	N.L.
114A	Pinion Gear	1	01-Up	89730B	N.L.
122A	Driven Gear	1	01-Up	89712B	N.L.
402D	Drive Gear (56T) (Gear, Sleeve & Bearing)	1	01-Up	89710BK	N.L.
SERVOS AND ACCUMULATORS					
312C	Piston, 2-3 Servo (No Groove) (3.000" Long) (Exc Nissan)	1	01-Up	89907AA	24220756
312C	Piston, 2-3 Servo (1 Groove) (3.190" Long) (Exc Nissan)	1	01-Up	89907AB	24220757
312C	Piston, 2-3 Servo (2 Groove) (3.039" Long) (Exc Nissan)	1	01-Up	89907AC	24220758
312C	Piston, 2-3 Servo (3 Groove) (3.059" Long) (Exc Nissan)	1	01-Up	89907AD	24220759
312C	Piston, 2-3 Servo (4 Groove) (3.078" Long) (Exc Nissan)	1	01-Up	89907AE	24220760
312C	Piston, 2-3 Servo (4 Groove) (2.508" Long) (Nissan)	1	04-Up	89907BA	31615-8Y005
312C	Piston, 2-3 Servo (3 Groove) (2.528" Long) (Nissan)	1	01-Up	89907BB	31615-8Y004
312C	Piston, 2-3 Servo (2 Groove) (2.547" Long) (Nissan)	1	01-Up	89907BC	31615-8Y003
312C	Piston, 2-3 Servo (1 Groove) (2.567" Long) (Nissan)	1	01-Up	89907BD	31615-8Y002
312C	Piston, 2-3 Servo (No Groove) (2.587" Long) (Nissan)	1	04-Up	89907BE	31615-8Y001
N.I.	Accumulator Assembly, Forward & Direct	1	01-Up	89960B	N.L.
TECHNICAL MANUALS					
N.I.	Manual Diagnostic Guide (Volvo, Saab, Nissan)	1	01-Up	89400CT	AW55-50 DG

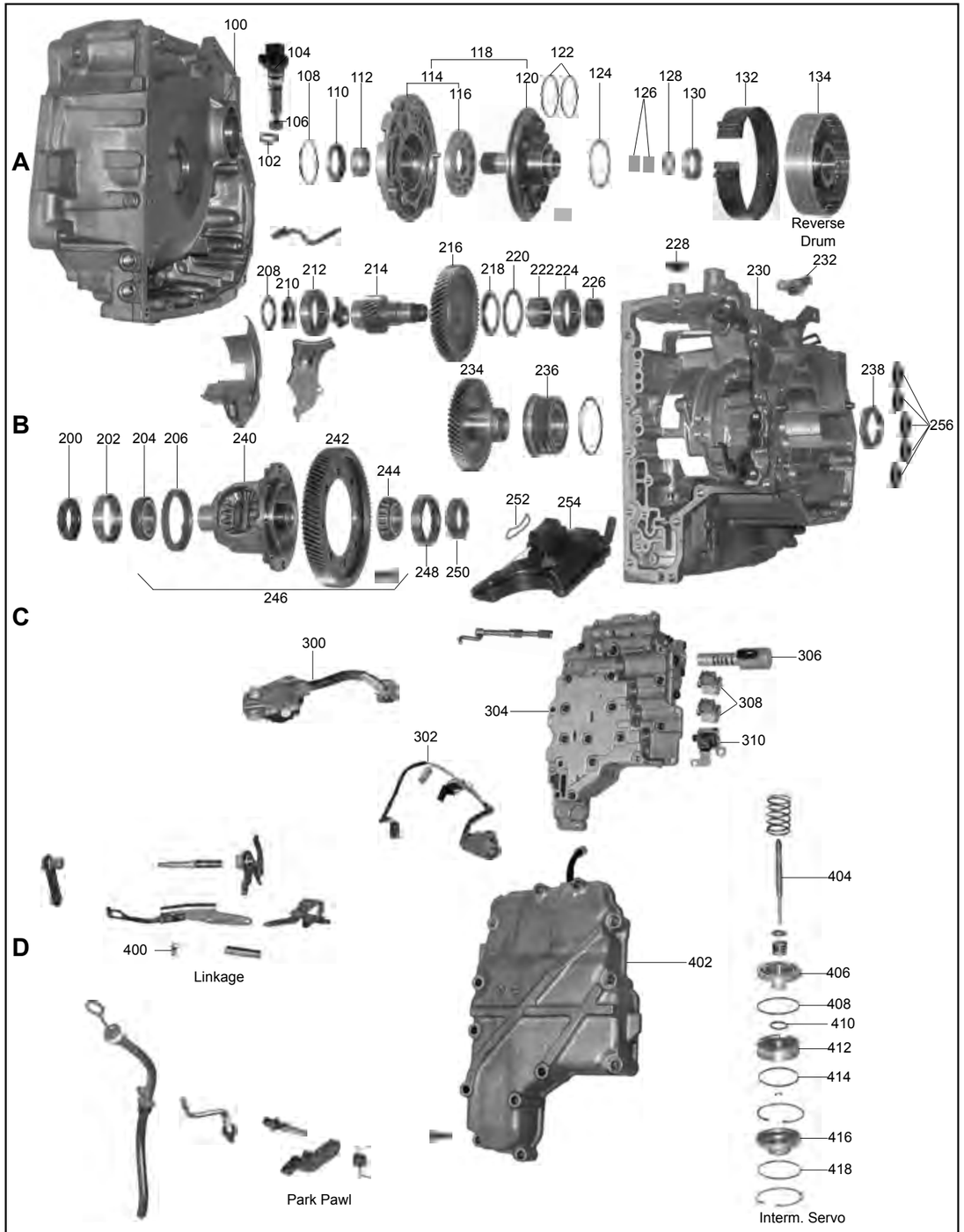
A
B
C
D
100
102
104
106
108
110
112
114
116
118
120
122
124
126
128
130
132
134
Reverse Drum
200
202
204
206
208
210
212
214
216
218
220
222
224
226
228
230
232
234
236
238
240
242
244
246
248
250
252
254
256
300
302
304
306
308
310
400
Linkage
402
404
406
408
410
412
414
416
418
Park Pawl
Interm. Servo

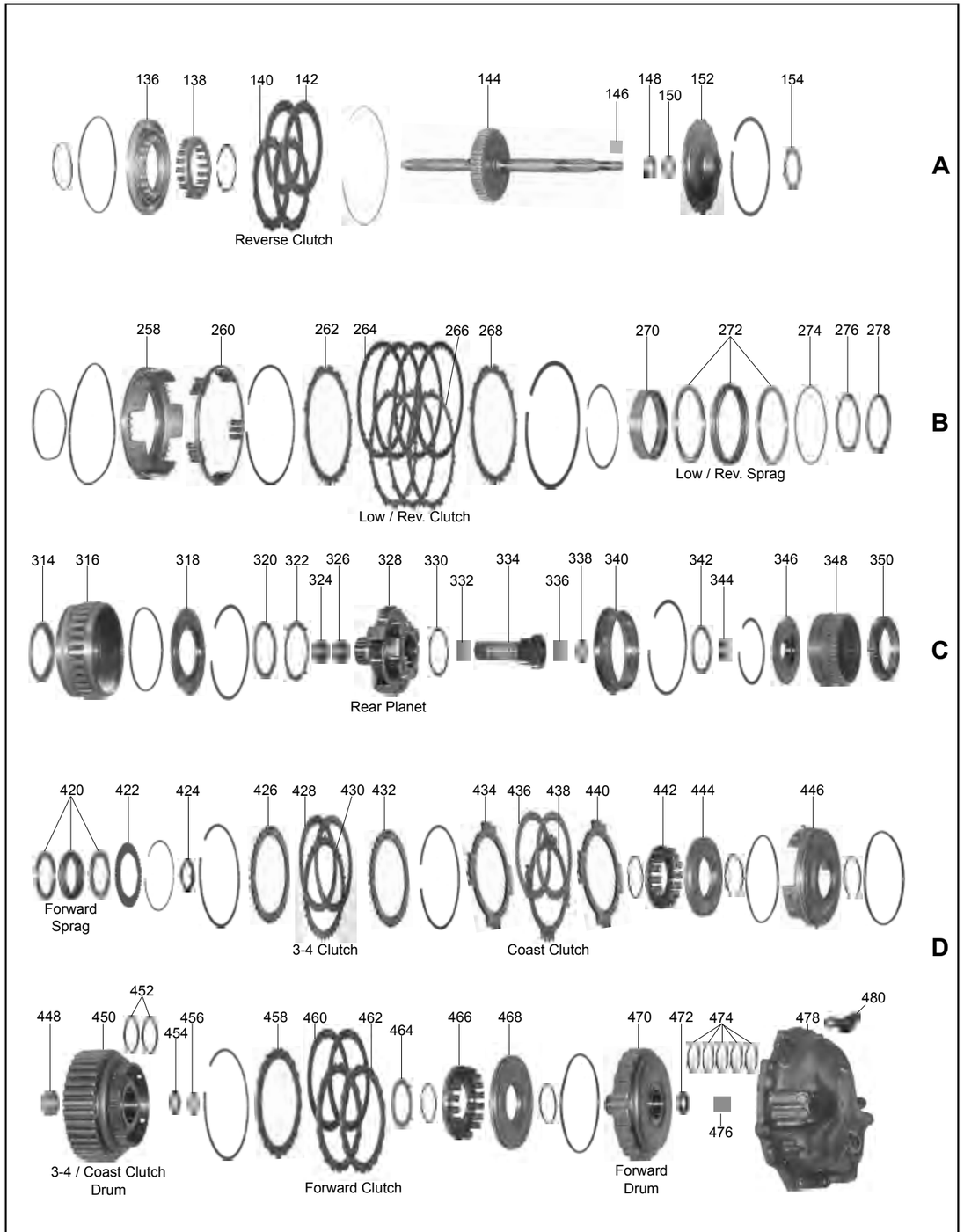
A
B
C
D
136
138
140
142
144
146
148
150
152
154
Reverse Clutch
258
260
262
264
266
268
270
272
274
276
278
Low / Rev. Clutch
Low / Rev. Sprag
314
316
318
320
322
324
326
328
330
332
334
336
338
340
342
344
346
348
350
Rear Planet
420
422
424
426
428
430
432
434
436
438
440
442
444
446
Forward Sprag
3-4 Clutch
Coast Clutch
448
450
452
454
456
458
460
462
464
466
468
470
472
474
476
478
480
3-4 / Coast Clutch Drum
Forward Clutch
Forward Drum

ILL.		Qty.	Year	Part #	Ref. #
MASTER OVERHAUL KITS (WITH STEELS)					
N.I.	AW60-40LE (AF13)	1	93-97	121006	N.L.
N.I.	AW60-40LE (AF13) /(AF17)	1	98-Up	121006A	N.L.
MASTER OVERHAUL KITS (LESS STEELS)					
N.I.	AW60-40LE (AF13)	1	93-97	121004	N.L.
N.I.	AW60-40LE (AF13) /(AF17)	1	98-Up	121004A	N.L.
OVERHAUL KITS (WITH RINGS AND SEALS)					
N.I.	AW60-40LE (AF13) /(AF17)	1	93-Up	121002	N.L.
METAL CLAD SEALS					
110A	Front Pump (Torque Converter)	1	93-Up	57070A	90311-38029
200B	Axle (Right) (Exc. Esteem)	1	93-97	121076	90486078
200B	Axle (Right) (Exc. Esteem)	1	98-Up	121076A	N.L.
250B	Axle (Left) (Exc. Esteem)	1	93-Up	121076	90486078
250B	Axle (Left/Right) (Esteem)	2	93-Up	121076E	N.L.
FRICTION PLATES					
142A	Reverse (C2)	2	93-97	121110	90444546
142A	Reverse (C2)	2	98-Up	121110A	N.L.
264B	Low/ Reverse (B2)	4	93-Up	89114	90348808
428D	Overdrive/3-4 (C3)	2	93-Up	121108	90444669
436D	Coast (C0)	2	93-Up	121112	90444685
460D	Forward (C1)	2	93-Up	121108	90444669
STEEL PLATES					
140A	Reverse (C2)	2	93-97	121130	90444686
140A	Reverse (C2)	2	98-Up	121130A	N.L.
266B	Low/ Reverse (B2)	3	93-Up	121134	90444973
430D	Overdrive/3-4 (C3)	1	93-Up	121120	90444885
438D	Coast (C0)	1	93-Up	121132	90444863
462D	Forward (C1)	2	93-Up	121128	90444670
PRESSURE PLATES					
152A	Reverse (C2)	1	93-up	121150	N.L.
262B	Low/Reverse (B2)	1-2	93-up	121155	N.L.
426D	Overdrive/3-4 (C3) (.142")	1-2	93-up	121140	N.L.
426D	Overdrive/3-4 (C3) (.150")	1-2	93-up	121140B	N.L.
434D	Coast (C0) (.126")	1-2	93-up	121152	N.L.
434D	Coast (C0) (.155")	1-2	93-up	121152B	N.L.
458D	Forward (C1) (.142")	1	93-up	121148	N.L.
458D	Forward (C1) (.150")	1	93-up	121148B	N.L.
FILTERS					
254B	Filter	1	93-Up	121010	N.L.
BANDS					
132A	Band, 2-4 Flex (AF13)	1	93-Up	121022	26971-60G10
132A	Band, 2-4 Flex (AF17)	1	98-Up	121022B	N.L.
BUSHINGS					
N.I.	Bushing Kit	1	93-Up	121030D	N.L.
THRUST WASHERS/BEARINGS					
WASHERS					
N.I.	Thrust Washer Kit	1	93-Up	121200	N.L.

ILL.		Qty.	Year	Part #	Ref. #
ELECTRICAL COMPONENTS					
232B	Sensor, Output Speed (OSS)	1	93-Up	121436	26141-60G10
300C	Switch, Neutral Safety	1	93-Up	121410	37720-60G11
302C	Harness, External	1	93-Up	121445	N.L.
302C	Harness, Internal	1	93-Up	121446	N.L.
306C	EPC (Linear)	1	93-Up	121431	26427-60G10
308C	Shift A/B	1	93-Up	121421	26426-60G11
310C	Lock-Up (TCC)	1	93-Up	121425	N.L.
480D	Sensor, Input Speed (ISS)	1	93-Up	121438	26143-60G10
PUMPS					
118A	Pump Assembly	1	93-Up	121500	N.L.
PUMP COMPONENTS					
116A	Pump Gears	1	93-Up	121530	N.L.
DRUMS & COMPONENTS					
134A	Reverse (C2)	1	93-Up	121556	N.L.
450D	Coast (C0)	1	93-Up	121550	N.L.
470D	Forward (C1)	1	93-Up	121554	N.L.
PLANETS & COMPONENTS					
316C	Ring Gear (Large Diameter)	1	93-up	121594	N.L.
318C	Hub, Ring Gear (Large Diameter) (98T)	1	93-up	121604	N.L.
328C	Planet	1	93-up	121584	N.L.
346C	Hub, Ring Gear (Small Diameter)	1	93-up	121602	N.L.
348C	Ring Gear (Small Diameter)	1	93-Up	121592	N.L.
ONE WAY CLUTCHES					
272B	Low/Reverse (B2) (24 Lugs)	1	93-up	121654	N.L.
420D	Forward (C1) (22 Lugs)	1	93-up	121652	N.L.
SHAFTS					
144A	Input Shaft w/ Reverse Clutch Hub (12 1/2" Long)	1	93-up	121670	N.L.
VALVE BODIES & GOVERNORS					
304C	Valve Body (4 Solenoids)	1	93-up	121740	N.L.
DIFFERENTIALS					
216B	Transfer Driven Gear (54T)	1	93-up	121712	N.L.
234B	Transfer Drive Gear (53T)	1	93-up	121710	N.L.
246B	Differential Assembly (87T)	1	93-up	121715	N.L.
CASES/HOUSINGS & COMPONENTS					
100A	Bell Housing	1	93-up	121750	N.L.
230B	Case	1	93-up	121760	N.L.
402D	Side Pan	1	93-up	121766	N.L.
478D	Rear Cover (Aluminum)	1	93-up	121759	N.L.

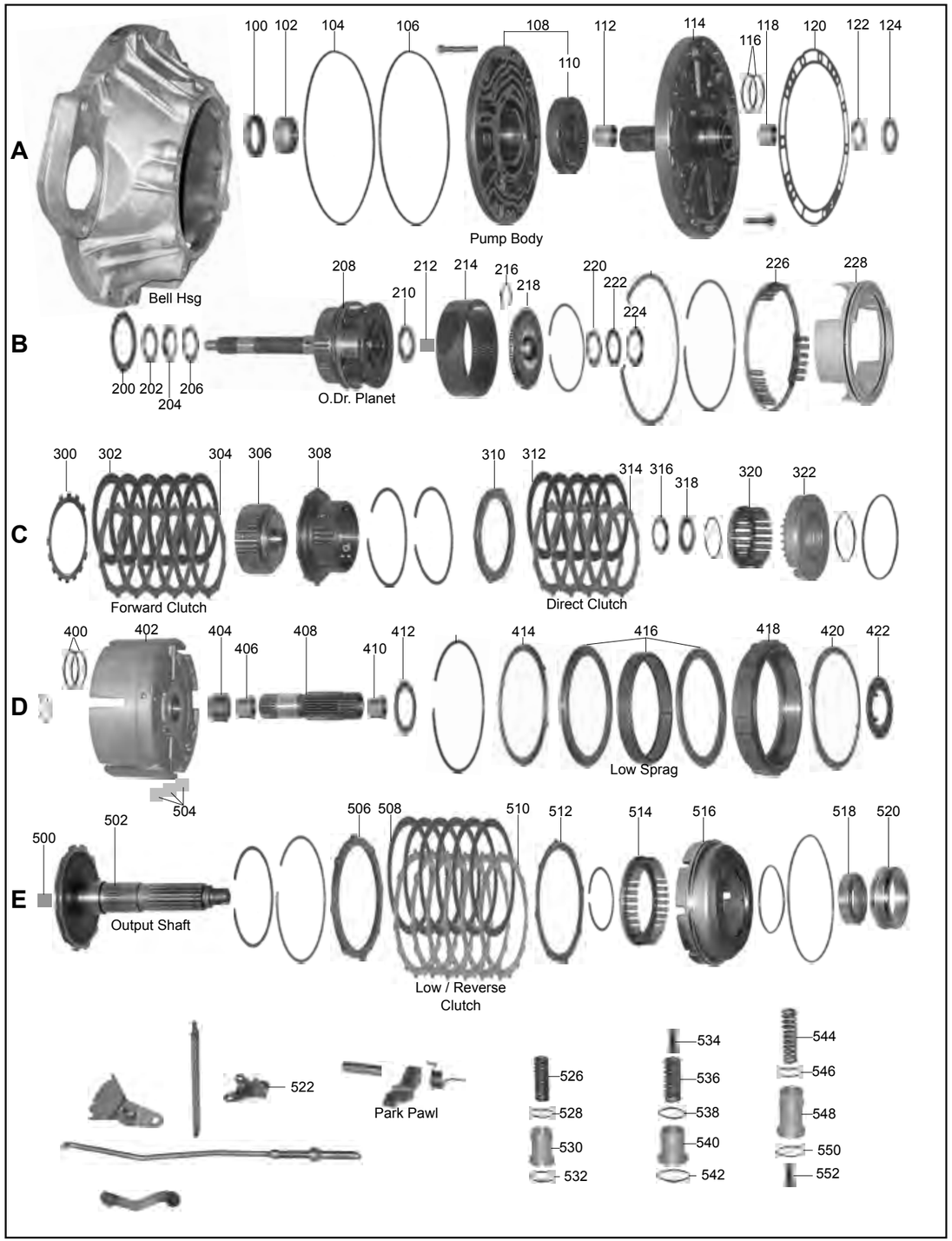
A
B
C
D
E
100 102 104 106 108 110 112 114 116 118 120 122 124
Bell Hsg
Pump Body
200 202 204 206
208 210 212 214 216 218 220 222 224 226 228
O.Dr. Planet
300 302 304 306 308
Forward Clutch
310 312 314 316 318 320 322
Direct Clutch
400 402 404 406 408 410 412 414 416 418 420 422
504
Low Sprag
500 502
Output Shaft
506 508 510 512 514 516 518 520
Low / Reverse Clutch
522
Park Pawl
526 528 530 532
534 536 538 540 542
544 546 548 550 552

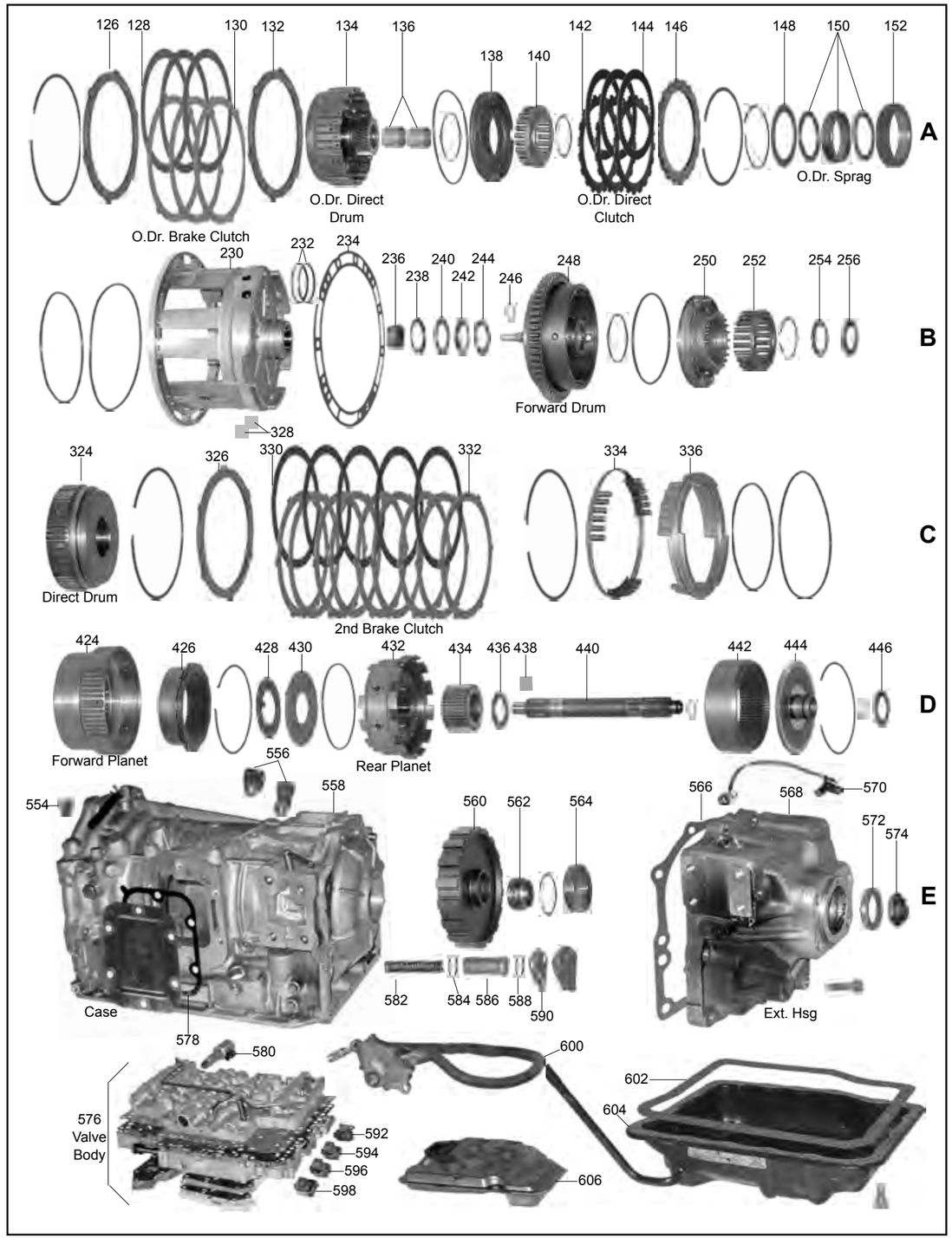
A
B
C
D
E
126 128 130 132 134 136 138 140 142 144 146 148 150 152
O.Dr. Brake Clutch
O.Dr. Direct Drum
O.Dr. Direct Clutch
O.Dr. Sprag
230 232 234 236 238 240 242 244 246 248 250 252 254 256
328
Forward Drum
324 326 330 332 334 336
Direct Drum
2nd Brake Clutch
424 426 428 430 432 434 436 438 440 442 444 446
Forward Planet
Rear Planet
554 556 558 560 562 564 566 568 570 572 574
Case
Ext. Hsg
578 580 600 602 604
576 Valve Body
582 584 586 588 590
592 594 596 598 606

ILL.		Qty.	Year	Part #	Ref. #
MASTER OVERHAUL KITS (WITH STEELS)					
N.I.	AW450-43LE (RNJ)	1	98-Up	141006	N.L.
MASTER OVERHAUL KITS (LESS STEELS)					
N.I.	AW450-43LE (RNJ)	1	98-Up	141004	N.L.
OVERHAUL KITS (WITH RINGS AND SEALS)					
N.I.	AW450-43LE (RNJ)	1	98-Up	141002	N.L.
GASKETS & O-RINGS					
602E	Gasket, Pan	1	98-Up	141300	35168-36010
N.I.	Valve Body Gasket Package	1	98-Up	141001	N.L.
METAL CLAD SEALS					
100A	Front (Converter)	1	98-Up	141070	97218280
572E	Extension Housing	1	98-Up	141074	97202071
N.I.	Manual Lever Shaft	1	98-Up	60072	31375-31X01
SEALING RINGS & KITS					
N.I.	Sealing Ring Kit	2	98-Up	141175K	N.L.
FRICTION PLATES					
128A	Overdrive Brake	3	98-Up	141100	97257023
144A	Overdrive Direct	3	98-Up	141102	97257043
302C	Forward (2.1mm)	7	98-Up	141102	35633-36020
302C	Forward (2.1mm) (Hi-Energy)	7	98-Up	141102A	35633-36060
302C	Forward (1.8mm)	7	98-Up	141102C	97256973
312C	Direct	5	98-Up	141102	35633-36020
312C	Direct (Hi-Energy)	5	98-Up	141102A	35633-36060
330C	2nd Brake (Intermediate)	5	98-Up	141100	35633-36010
508E	Low/ Reverse	6	98-Up	141114	35633-36030
STEEL PLATES					
130A	Overdrive Brake (2.4mm)	2	98-Up	141120A	35632-60010
142A	Overdrive Direct	3	98-Up	141122	8-97256-969-0
304C	Forward	7	98-Up	141122	35634-36010
314C	Direct (2.4mm)	5	98-Up	141122AB	97256972
332C	2nd Brake (Intermediate)	5	98-Up	141124	8-97256-939-0
510E	Low/ Reverse	6	98-Up	141134	8-97256-951-0
FILTERS					
606E	Filter	1	98-Up	141010	8-97202-067-0
FILTER KITS					
N.I.	Filter Kit	1	98-Up	141011	N.L.
BUSHINGS					
N.I.	Bushing Kit	1	98-Up	141030	N.L.
102A	Pump Bushing	1	98-Up	141034A	N.L.
ELECTRICAL COMPONENTS					
570E	Sensor, Output Speed	1	98-Up	141436	N.L.
580E	Solenoid, Pressure Control (EPC)	1	98-Up	141431	97257141
592E	Solenoid, Lockup (TCC) (45 degree Bracket)	1	98-Up	141425A	97202073
594E	Solenoid, Timing (2 Hole Bracket)	1	98-Up	141421A	97202074
596E	Solenoid, Shift 1 & 2 (90 degree Bracket)	2	98-Up	141422A	97202072
600E	Switch, Neutral Safety	1	98-Up	141410	N.L.
N.I.	Solenoid Group	1	98-Up	141420K	N.L.
N.I.	Sensor, TOT (Bottom of Valve Body)	1	98-Up	141437	N.L.
N.I.	Wire Harness, Internal w/ Brown Connector (1/98-12/99)	1	98-L99	141446A	8-97202075-0
N.I.	Wire Harness, Internal w/ Black Connector (00-Up)	1	00-Up	141446	8-97229532-0
PUMPS					
108A	Pump Assembly (11T Inner Gear)	1	98-Up	141500	8-97256916-0

ILL.		Qty.	Year	Part #	Ref. #
DRUMS & COMPONENTS					
248B	Drum, Forward	1	98-Up	141554	N.L.
306C	Hub, Forward	1	98-Up	141574	N.L.
308C	Drum, Direct	1	98-Up	141555	N.L.
308C	Hub, Direct (w/ Pressure Plate)	1	98-Up	141575	N.L.
PLANETS & COMPONENTS					
208B	Planet, Overdrive w/ Input Shaft	1	98-Up	141580K	N.L.
214B	Ring Gear, Overdrive Planet	1	98-Up	141590	N.L.
218B	Hub, Overdrive Ring Gear	1	98-Up	141600	N.L.
424D	Planet, Front	1	98-Up	141582	N.L.
426D	Ring Gear, Front Planet	1	98-Up	141592	N.L.
432D	Planet, Rear	1	98-Up	141584	N.L.
442D	Ring Gear, Rear Planet	1	98-Up	141594	N.L.
444D	Hub, Rear Ring Gear	1	98-Up	141604	N.L.
SUN GEARS					
408D	Sun Gear, Front	1	98-Up	141612	N.L.
434D	Sun Gear, Rear	1	98-Up	141614	N.L.
ONE WAY CLUTCHES					
150A	Sprag, Overdrive Clutch	1	98-Up	141650	35791-36010
416D	Low Sprag & Race Assembly	1	98-Up	141642	N.L.
SHELLS & SUPPORTS					
402D	Support, 2nd	1	98-Up	141632K	N.L.
SHAFTS					
440D	Main Shaft	1	98-Up	141674	N.L.
502E	Output (2wd)	1	98-Up	141678	N.L.
VALVE BODIES & GOVERNORS					
576E	Valve Body (5 Solenoids)	1	98-Up	141740	N.L.
N.I.	Cutback Valve & Sleeve	1	98-Up	14141HK	94987-01K
CASES/HOUSINGS & COMPONENTS					
558E	Case w/ PTO Side Mounts	1	98-Up	141760	N.L.
568E	Extension Housing (2wd)	1	98-Up	141770	N.L.
604E	Pan, Bottom	1	98-Up	141765	N.L.
N.I.	Bell Housing	1	98-Up	141750	N.L.

Notes

ILL.		Qty.	Year	Part #	Ref. #
MASTER OVERHAUL KITS (WITH STEELS)					
N.I.	A440F with Transfer Case Parts	1	85-92	141006AF	N.L.
N.I.	A442F without Transfer Case Parts	1	93-95	141006DF	N.L.
MASTER OVERHAUL KITS (LESS STEELS)					
N.I.	A440F with Transfer Case Parts	1	85-92	141004AF	N.L.
N.I.	A442F without Transfer Case Parts	1	93-95	141004DF	N.L.
OVERHAUL KITS (WITH RINGS AND SEALS)					
N.I.	A440F without Transfer Case Parts	1	85-95	141002F	N.L.
N.I.	A442F without Transfer Case Parts	1	93-95	141002F	N.L.
N.I.	Sub Kit, Transfer Case Parts Only A440F	AR	85-1/90	141001	N.L.
GASKETS & O-RINGS					
104A	O-Ring, Pump	1	85-95	141311A	N.L.
120A	Gasket, Pump	1	85-95	141310A	N.L.
566E	Gasket, Transfer Case	1	85-95	141304	N.L.
602E	Gasket, Pan	1	85-95	141300	N.L.
N.I.	Gasket, Filter (A440F)	1	85-95	141326	N.L.
N.I.	Gasket, Filter (A442F)	1	85-95	141326A	N.L.
METAL CLAD SEALS					
100A	Front Pump	1	85-95	141070	N.L.
572E	Adapter Housing	1	85-95	141074	N.L.
FILTERS					
606E	A440F (5/8" Thick)	1	85-92	141010	N.L.
606E	A440F (2" Thick)	1	85-92	141010A	N.L.
606E	A442F	1	93-95	141010B	N.L.
FILTER KITS					
N.I.	A440F (5/8" Thick)	1	85-92	141011	N.L.
N.I.	A440F (2" Thick)	1	85-92	141011A	N.L.
N.I.	A442F	1	93-95	141011B	N.L.
BUSHINGS					
102A	Pump Body	1	85-95	141034A	N.L.
ONE WAY CLUTCHES					
150A	Sprag, Overdrive	1	85-95	141650	N.L.
416D	Sprag, Low	1	85-95	141642	N.L.

Notes

Notes

ILL.		Qty.	Year	Part #	Ref. #
MASTER OVERHAUL KITS (WITH STEELS)					
N.I.	AW80-40LE, AW81-40LE	1	04-Up	199006	N.L.
N.I.	U440E, U441E	1	99-Up	199006A	N.L.
MASTER OVERHAUL KITS (LESS STEELS)					
N.I.	AW80-40LE, AW81-40LE	1	04-Up	199004	N.L.
N.I.	U440E, U441E	1	99-Up	199004A	N.L.
OVERHAUL KITS (WITH RINGS AND SEALS)					
N.I.	AW80-40LE, AW81-40LE	1	04-Up	199002	N.L.
N.I.	U440E, U441E	1	99-Up	199002A	N.L.
BONDED PISTONS					
N.I.	Piston Kit	1	04-Up	199960A	N.L.
N.I.	Piston, C1 (Bonded)	1	04-Up	199964	N.L.
N.I.	Piston, C1 Balance (Retainer) (Bonded)	1	04-Up	199984	N.L.
N.I.	Piston, C3 Clutch (Bonded) (Forward Drum)	1	04-Up	199966	N.L.
GASKETS & O-RINGS					
N.I.	Pan Gasket	1	04-Up	199300	93741472
METAL CLAD SEALS					
N.I.	Front Pump	1	04-Up	57070A	90311-38029
N.I.	Axle, Right (Aveo)	1	04-Up	199076	93741870
N.I.	Axle, Right (Toyota)	1	04-Up	199076A	N.L.
N.I.	Axle, Left (Aveo)	1	04-Up	199077	93741869
N.I.	Axle, Left (Toyota)	1	04-Up	67076BC	90311-34013
SEALING RINGS & KITS					
N.I.	Sealing Ring Kit	1	04-Up	199175	N.L.
FRICTION PLATES					
N.I.	B1 (OD, 2nd Coast)	2	04-Up	199100	93741449
N.I.	B2 (2nd Brake)	2	04-Up	199104	93741615
N.I.	B3 (Low Reverse)	4	04-Up	199114	93744334
N.I.	C1 (Forward)	4	04-Up	199108	93741571
N.I.	C2 (Direct)	2	04-Up	199106	93741600
N.I.	C3 (Reverse)	2	04-Up	199110	93741611
STEEL PLATES					
N.I.	B1 (OD, 2nd Coast)	2	04-Up	199120	93741450
N.I.	B2 (2nd Brake)	2	04-Up	199124	93741617
N.I.	B3 (Low Reverse)	4	04-Up	199134	93741618
N.I.	C1 (Forward)	4	04-Up	199128	93741572
N.I.	C2 (Direct)	2	04-Up	199126	93741586
N.I.	C3 (Reverse)	2	04-Up	199130	93741588
PRESSURE PLATES					
N.I.	Overdrive (B1)	1	04-Up	199140	N.L.
N.I.	2nd Brake (B2)	1	04-Up	199144	N.L.
N.I.	Direct (C2)	1	04-Up	199146	N.L.
N.I.	Forward (C1)	1	04-Up	199148	N.L.
N.I.	Reverse (C3)	1	04-Up	199150	N.L.
N.I.	Low/ Reverse (B3)	1	04-Up	199154	N.L.
FILTERS					
N.I.	AW80-40LE, AW81-40LE, U440E	1	99-Up	199010	N.L.
BUSHINGS					
N.I.	Bushing Kit	1	04-Up	199030	N.L.
THRUST WASHERS/BEARINGS					
WASHERS					
N.I.	Thrust Washer Kit	1	04-Up	199200	N.L.

ILL.		Qty.	Year	Part #	Ref. #
BEARINGS					
N.I.	Bearing Kit	1	04-Up	199201	N.L.
ELECTRICAL COMPONENTS					
N.I.	Shift # 1 & Shift # 2	2	04-Up	199421	N.L.
N.I.	Lock-Up (Shift)	1	04-Up	199425	N.L.
N.I.	Lock-Up Control (PWM)	1	04-Up	199425A	N.L.
N.I.	EPC	1	04-Up	199431	N.L.
PUMPS					
N.I.	Pump Body	1	04-Up	199510	N.L.
N.I.	Pump Cover (Stator)	1	04-Up	199520	N.L.
PUMP COMPONENTS					
N.I.	Pump Gears	1	04-Up	199530	N.L.
DRUMS & COMPONENTS					
N.I.	Direct (C2)	1	04-Up	199555	N.L.
N.I.	Reverse (C3)	1	04-Up	199556	N.L.
N.I.	Hub, Forward	1	04-Up	199574	N.L.
N.I.	Hub, Direct	1	04-Up	199575	N.L.
N.I.	Hub, Reverse	1	04-Up	199578	N.L.
N.I.	Piston, C1 (Bonded)	1	04-Up	199964	N.L.
N.I.	Piston, C1 Balance (Retainer) (Bonded)	1	04-Up	199984	N.L.
N.I.	Piston, C3 Clutch (Bonded) (Forward Drum)	1	04-Up	199966	N.L.
PLANETS & COMPONENTS					
N.I.	Planet	1	04-Up	199582	N.L.
N.I.	Ring Gear	1	04-Up	199592	N.L.
SUN GEARS					
N.I.	Sun Gear, Forward	1	04-Up	199612	N.L.
N.I.	Sun Gear, Reaction with Shell	1	04-Up	199614	N.L.
ONE WAY CLUTCHES					
N.I.	One Way Clutch Hub & Sprag (F1)	1	04-Up	199642	N.L.
N.I.	One Way Clutch, Low (F2)	1	04-Up	199654	N.L.
VALVE BODIES & GOVERNORS					
N.I.	Valve Body	1	04-Up	199740	N.L.
DIFFERENTIALS					
N.I.	Assembly (75T Ring, 20T Small, 45T Large) Idler Gear	1	04-Up	199715K	N.L.
N.I.	Assembly (77T Ring, 19T Small, 52T Large) Idler Gear	1	04-Up	199715AK	N.L.
MISCELLANEOUS COMPONENTS					
N.I.	Case	1	04-Up	199760	N.L.
N.I.	End Cover	1	04-Up	199759	N.L.
N.I.	Pan	1	04-Up	199765	N.L.
N.I.	Piston, Intermediate (B2)	1	04-Up	199962	N.L.
N.I.	Piston, B3 Low/Reverse	1	04-Up	199967	N.L.
N.I.	Piston, B1 Overdrive	1	04-Up	199961	N.L.
TECHNICAL MANUALS					
N.I.	AW80/81-40LE (Aveo)	1	04-Up	199400	N.L.
N.I.	U440E, U441E (Yaris, Echo)	1	04-Up	199400A	N.L.

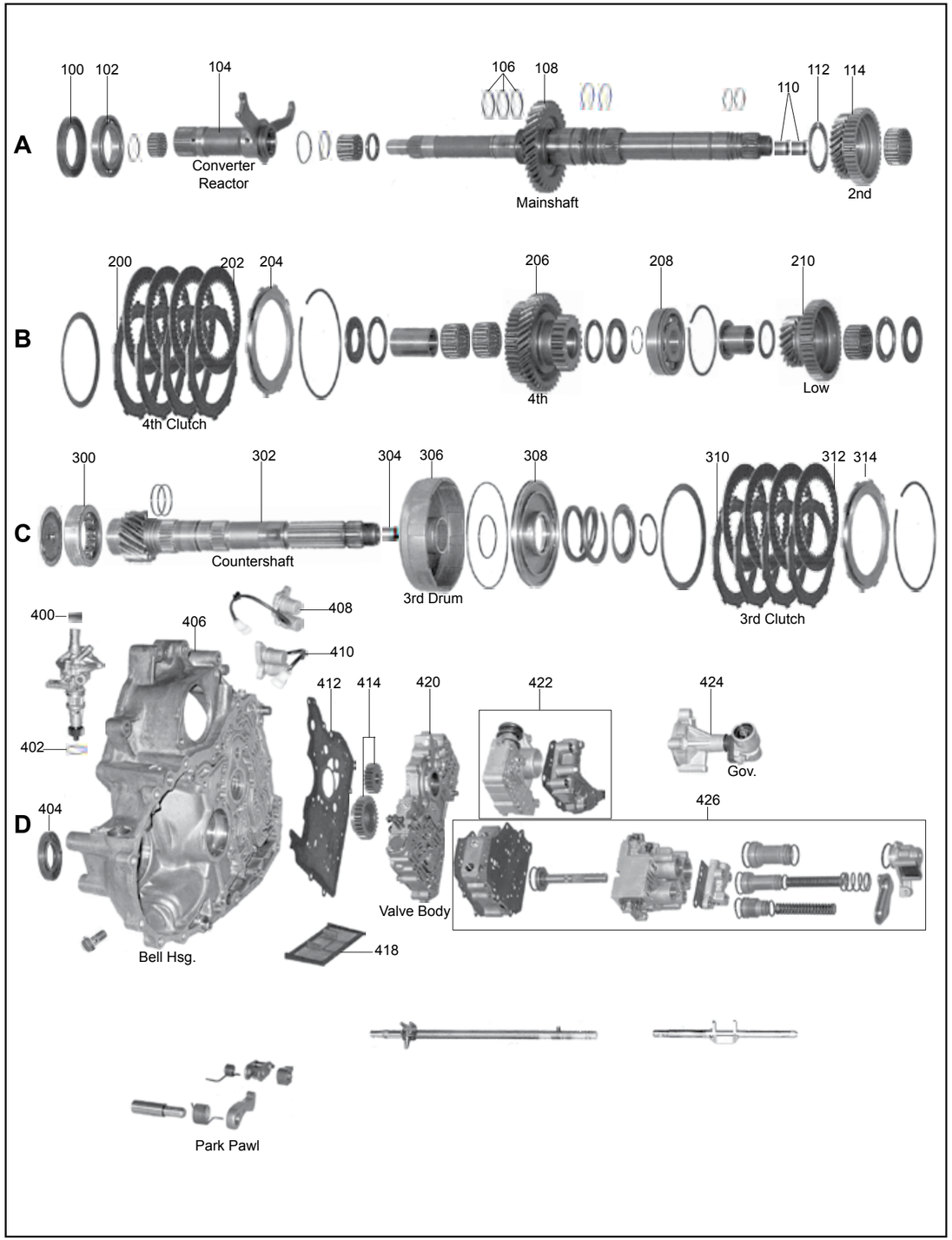
A
100
102
104
Converter
Reactor
106
108
Mainshaft
110
112
114
2nd
B
200
202
204
4th Clutch
206
4th
208
210
Low
C
300
302
Countershaft
304
306
3rd Drum
308
310
312
314
3rd Clutch
400
406
408
410
412
414
420
422
424
Gov.
402
D
404
Bell Hsg.
Valve Body
426
418
Park Pawl

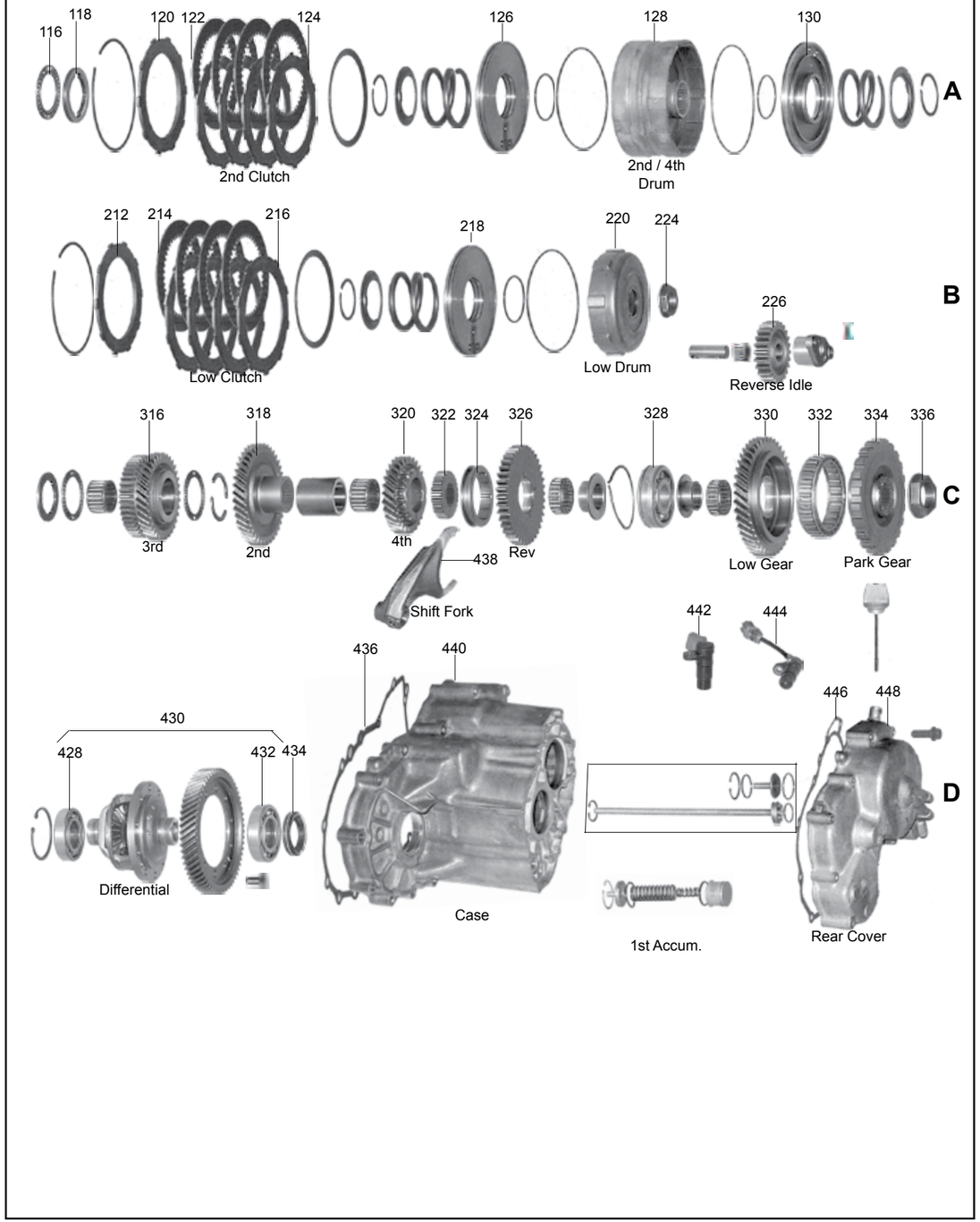
A
116
118
120
122
2nd Clutch
124
126
128
2nd / 4th
Drum
130
B
212
214
Low Clutch
216
218
220
Low Drum
224
226
Reverse Idle
C
316
3rd
318
2nd
320
4th
322
324
326
Rev
438
Shift Fork
328
330
Low Gear
332
334
Park Gear
336
442
444
430
428
432
434
Differential
436
440
Case
446
448
1st Accum.
Rear Cover
D

FWD
4 SPEED
2 SHAFT

ILL.		Qty.	Year	Part #	Ref. #
MASTER OVERHAUL KITS (WITH STEELS)					
N.I.	Accord (AK)	1	1983	60006A	N.L.
N.I.	Accord (AS)	1	84-85	60006B	N.L.
N.I.	Accord (F4)	1	86-89	60006C	N.L.
N.I.	Civic (CA)	1	86-87	60006BA	N.L.
N.I.	Civic (L4, ML4A)	1	88-91	60006L	N.L.
N.I.	CRX (L4, ML4A)	1	88-91	60006L	N.L.
N.I.	Del Sol (CA)	1	86-87	60006BA	N.L.
N.I.	Integra (CA)	1	86-87	60006D	N.L.
N.I.	Integra (P1)	1	88-89	60006D	N.L.
N.I.	Legend (G4, L5, PL5X) (86-90 Only)	1	86-90	60006H	N.L.
N.I.	Prelude w/ Carb (AS)	1	83-87	60006B	N.L.
N.I.	Prelude w/ F.I. (F4)	1	85-87	60006C	N.L.
N.I.	Prelude (K4, PY8A, MY8A)	1	88-91	60006E	N.L.
MASTER OVERHAUL KITS (LESS STEELS)					
N.I.	Accord (AK)	1	1983	60004A	N.L.
N.I.	Accord (AS)	1	84-85	60004B	N.L.
N.I.	Accord (F4)	1	86-89	60004C	N.L.
N.I.	Civic (CA)	1	86-87	60004B	N.L.
N.I.	Civic (L4, ML4A)	1	88-91	60004L	N.L.
N.I.	CRX (L4, ML4A)	1	88-91	60004L	N.L.
N.I.	Del Sol (CA)	1	86-87	60004B	N.L.
N.I.	Integra (CA)	1	86-87	60004D	N.L.
N.I.	Integra (P1)	1	88-89	60004D	N.L.
N.I.	Legend (G4, L5, PL5X) (86-90 Only)	1	86-90	60004H	N.L.
N.I.	Prelude w/ Carb (AS)	1	83-87	60004B	N.L.
N.I.	Prelude w/ F.I. (F4)	1	85-87	60004C	N.L.
N.I.	Prelude (K4, PY8A, MY8A)	1	88-91	60004E	N.L.
OVERHAUL KITS (WITH RINGS AND SEALS)					
N.I.	AK, AS	1	83-87	60002A	N.L.
N.I.	CA (Civic)	1	83-87	60002A	N.L.
N.I.	CA (Integra)	1	86-87	60002D	N.L.
N.I.	F4	1	85-89	60002C	N.L.
N.I.	K4, PY8A, MY8A	1	88-91	60002E	N.L.
N.I.	L4, ML4A, P1	1	88-91	60002L	N.L.
N.I.	G4, L5, PL5X	1	86-90	60002H	N.L.
METAL CLAD SEALS					
N.I.	Front (Helix Counter Clockwise)	1	83-91	60070	91207-PR0-003
N.I.	Front (Helix Clockwise)	1	86-90	60070H	91207-PG4-005
N.I.	Manual Shaft	1	83-91	60072	31375-31X01
N.I.	Throttle Shaft	1	83-91	60072A	91201-PA9-004
N.I.	Case (AK, AS, CA) (40mm x 62mm x 8mm)	1	83-87	60076A	N.L.
N.I.	Case (AK, AS, CA) (35mm x 62mm x 9mm)	1	83-87	60076AA	91205-PC9-005
N.I.	Case (F4, K4) (40mm x 62mm x 8mm)	1	85-91	60076A	N.L.
N.I.	Case (F4, K4) (40mm x 62mm x 9mm)	1	85-91	60076CA	91205-PC9-711
N.I.	Case (K4, PY8A, MY8A)	1	88-91	80076	91206-PK4-003
N.I.	Case (L4, ML4A)	1	88-91	60076L	91206-689-005
N.I.	Case (P1)	1	88-89	60076G	91206-PC8-005
N.I.	Case (G4, L5, PL5X)	1	86-90	60077H	91206-PG2-005
N.I.	Bell (AK, AS)	1	83-87	60077AA	91206-PC9-005
N.I.	Bell (CA) (35mm x 76mm x 9mm)	1	86-87	60077AA	91206-PC9-005
N.I.	Bell (CA) (40mm x 76mm x 9mm)	1	86-87	60077A	91206-PC9-711
N.I.	Bell (F4)	1	85-89	60077A	91206-PC9-711
N.I.	Bell (K4 Exc. Civic Awd) (PY8A, MY8A)	1	88-91	60077C	91205-PL3-A02
N.I.	Bell (K4 Civic Awd)	1	88-91	60077E	N.L.
N.I.	Bell (L4, ML4A, P1)	1	88-91	60077C	91205-PL3-A02
N.I.	Bell (G4, L5, PL5X)	1	86-90	60077H	91206-PG2-005
FRICTION PLATES					
N.I.	106mm (38T) (4 3/16" OD)	12	83-91	60100A	22544-PA9-020
N.I.	110mm (38T) (4 5/16" OD)	12	84-91	60100B	22544-P24-A01
N.I.	116mm (41T) (4 9/16" OD)	12-16	85-91	60100C	22544-PF4-010

ILL.		Qty.	Year	Part #	Ref. #
STEEL PLATES					
N.I.	106mm (8T) (.070") (3.220" ID)	AR	83-91	60120AA	22543-PA9-000
N.I.	106mm (8T) (.079") (3.220" ID)	12	83-91	60120A	22543-PA9-000
N.I.	110mm (8T) (.063") (3.230" ID)	3-12	88-91	60120BB	22543-PH0-850
N.I.	110mm (8T) (.080") (3.230" ID)	9-12	84-91	60120B	22543-PC9-000
N.I.	116mm (10T) (.070") (3.438" ID)	AR	85-91	60120CA	N.L.
N.I.	116mm (10T) (.080") (3.438" ID)	12-16	85-91	60120C	22543-PF4-000
FILTERS					
N.I.	AK, AS, F4, CA, G4	1	83-89	60010A	25420-PC9-000
N.I.	L4, ML4A, P1	1	88-91	60010D	25420-PL4-000
N.I.	K4 (88-89)	1	88-89	60010E	25420-PK4-900
N.I.	K4 (90-91), PY8A, MY8A	1	90-91	60010EC	25420-PY8-J10
N.I.	L5, PL5X	1	88-90	60010H	25420-PL5-000
BUSHINGS					
N.I.	Bushing Kit	1	83-91	60030A	N.L.
N.I.	Main Shaft (.337" OD)	1	83-91	60047A	N.L.
N.I.	Main Shaft (.457" OD)	1	83-91	60047AA	N.L.
N.I.	Pinion Shaft (.412" OD)	1	83-91	60052A	N.L.
N.I.	Tool, Bushing Remover & Installer	1	83-91	T-28999	N.L.
ONE WAY CLUTCHES					
N.I.	Sprag, Low (26 Lugs) (CA, AK, AS, L4, P1, Some F4)	1	83-91	60658A	23423-PA9-003
N.I.	Sprag, Low (L5, PL5X)	1	88-90	60658HA	23423-PG4-003
MISCELLANEOUS COMPONENTS					
N.I.	Nuts, Counter Shaft (18mm) (Left Hand) (6 Point)	1	83-91	60795C	N.L.
N.I.	Nuts, Counter Shaft (19mm) (Right Hand) (6 Point)	1	83-91	60796A	90201-689-900
N.I.	Nuts, Counter Shaft (22mm) (Left Hand) (6 Point)	1	83-91	80796B	90202-P56-000
N.I.	Nuts, Counter Shaft (22mm) (Right Hand) (6 Point)	1	83-91	80796A	90202-PF4-010
N.I.	Nuts, Counter Shaft (23mm) (Right Hand) (6 Point)	1	83-91	80795C	90201-P0Z-000
N.I.	Nuts, Counter Shaft (23mm) (Right Hand) (6 Point)	1	83-91	80796	90203-PX4-010
N.I.	Nuts, Main Shaft (18mm) (Left Hand) (12 Point)	1	83-91	60795A	90202-PG4-020
N.I.	Nuts, Main Shaft (18mm) (Right Hand) (12 Point)	1	83-91	60796C	N.L.
N.I.	Nuts, Main Shaft (20mm) (Left Hand) (12 Point)	1	83-91	80795D	90201-P4P-000
N.I.	Nuts, Main Shaft (23mm) (Left Hand) (6 Point)	1	83-91	80795	90201-PX4-010
N.I.	Nuts, Main Shaft (23mm) (Left Hand) (6 Point)	1	83-91	80796D	90203-P0Z-000
N.I.	Nuts, Secondary Shaft (22mm) (Left Hand) (6 Point)	1	83-91	80796B	90202-P56-000
N.I.	Nuts, Secondary Shaft (23mm) (Right Hand) (6 Point)	1	83-91	80796	90203-PX4-010
N.I.	Nuts, Secondary Shaft (23mm) (Right Hand) (6 Point)	1	83-91	80795C	90201-P0Z-000

Notes

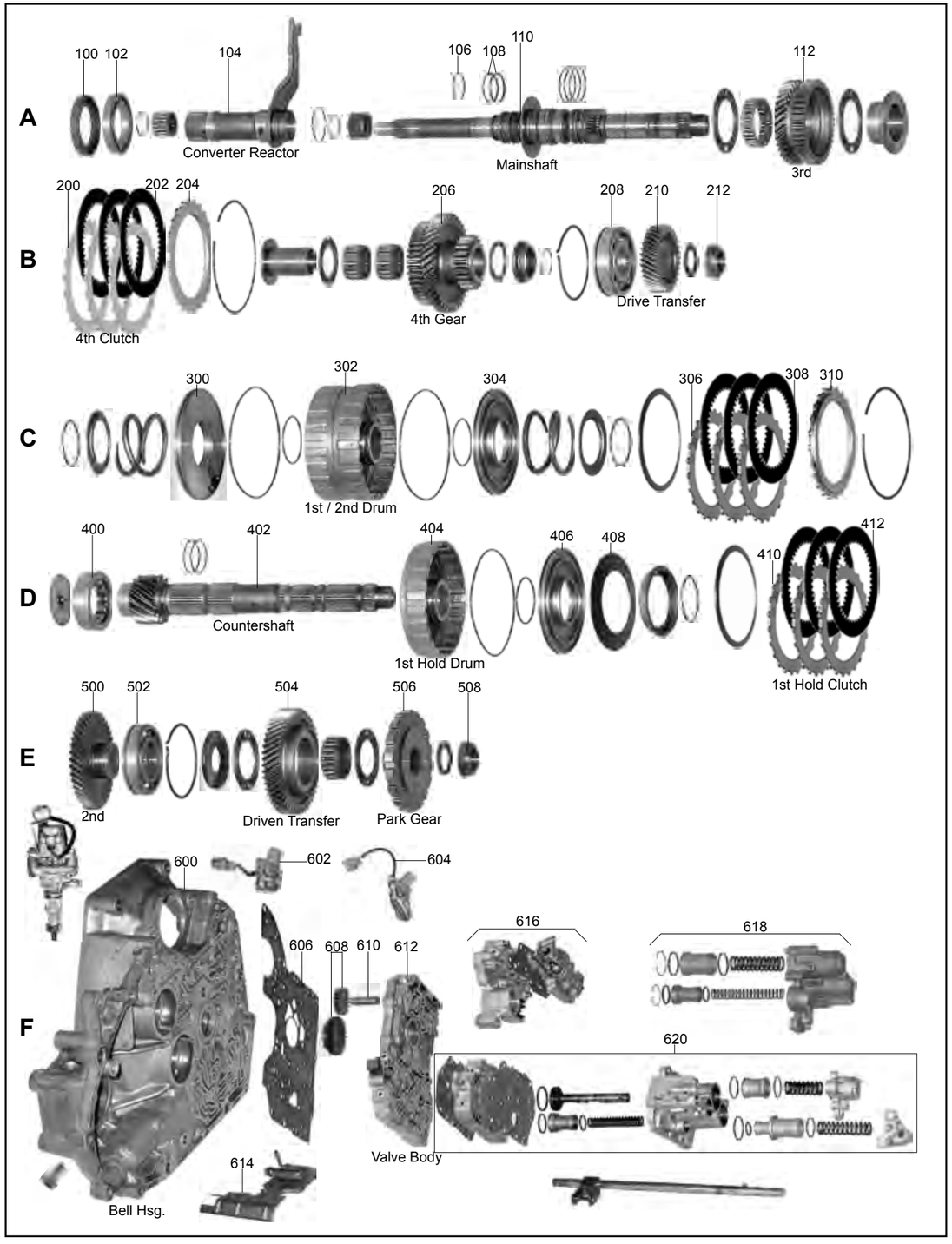
A
100
102
104
Converter Reactor
106
108
110
Mainshaft
112
3rd
B
200
202
204
4th Clutch
206
4th Gear
208
210
212
Drive Transfer
C
300
302
1st / 2nd Drum
304
306
308
310
D
400
402
Countershaft
404
1st Hold Drum
406
408
410
412
1st Hold Clutch
E
500
502
2nd
504
Driven Transfer
506
Park Gear
508
F
600
Bell Hsg.
602
604
606
608
610
612
Valve Body
614
616
618
620

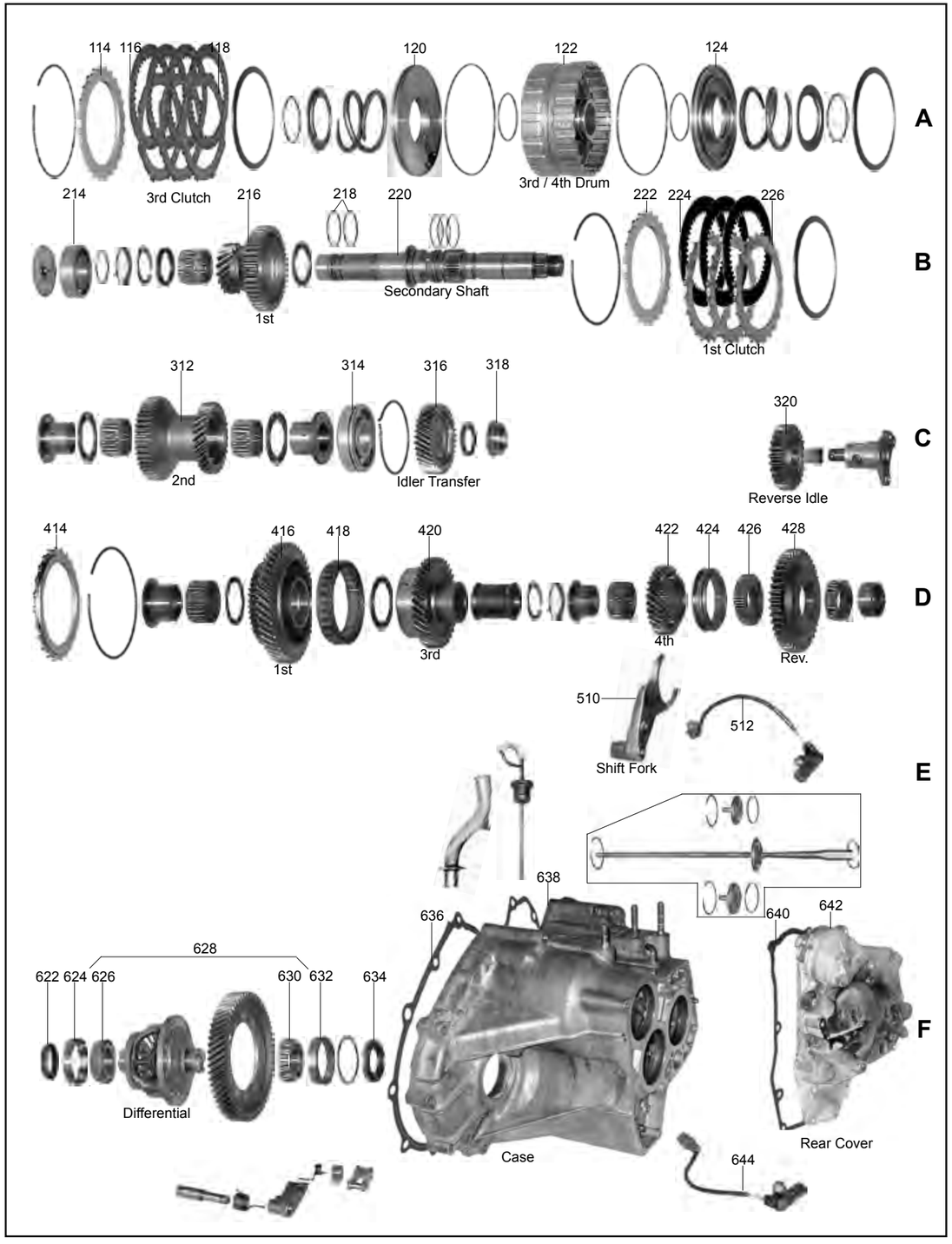
A
114
116
118
3rd Clutch
120
122
3rd / 4th Drum
124
B
214
216
1st
218
220
Secondary Shaft
222
224
226
1st Clutch
C
312
2nd
314
316
Idler Transfer
318
320
Reverse Idle
D
414
416
1st
418
420
3rd
422
4th
424
426
428
Rev.
E
510
Shift Fork
512
F
622
624
626
628
Differential
630
632
634
636
638
Case
640
642
Rear Cover
644

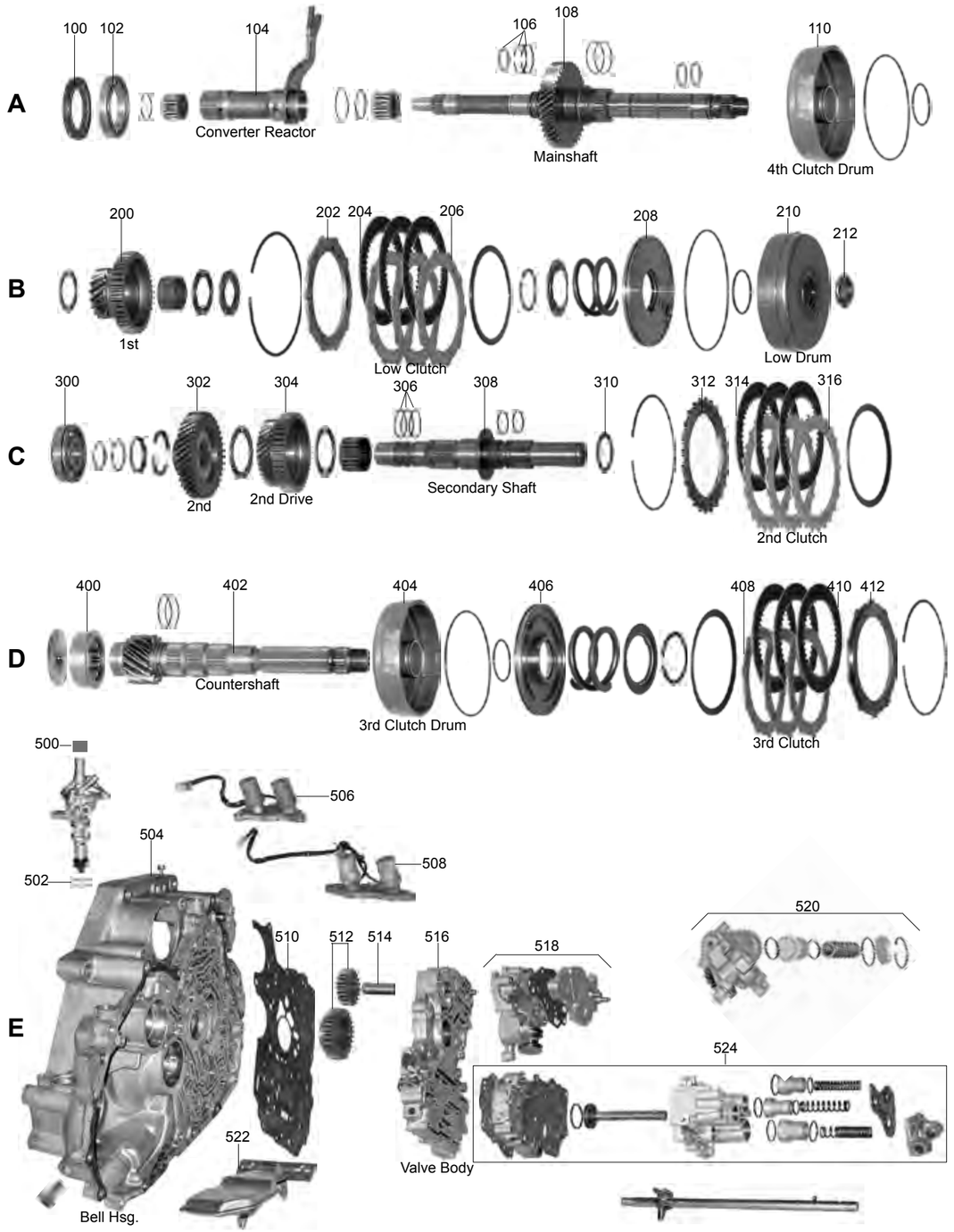
A
100
102
104
Converter Reactor
106
108
Mainshaft
110
4th Clutch Drum
B
200
1st
202
204
206
Low Clutch
208
210
Low Drum
212
C
300
302
2nd
304
2nd Drive
306
308
Secondary Shaft
310
312
314
316
2nd Clutch
D
400
Countershaft
402
404
3rd Clutch Drum
406
408
410
412
3rd Clutch
500
502
504
506
508
E
510
512
514
516
Valve Body
518
520
522
Bell Hsg.
524

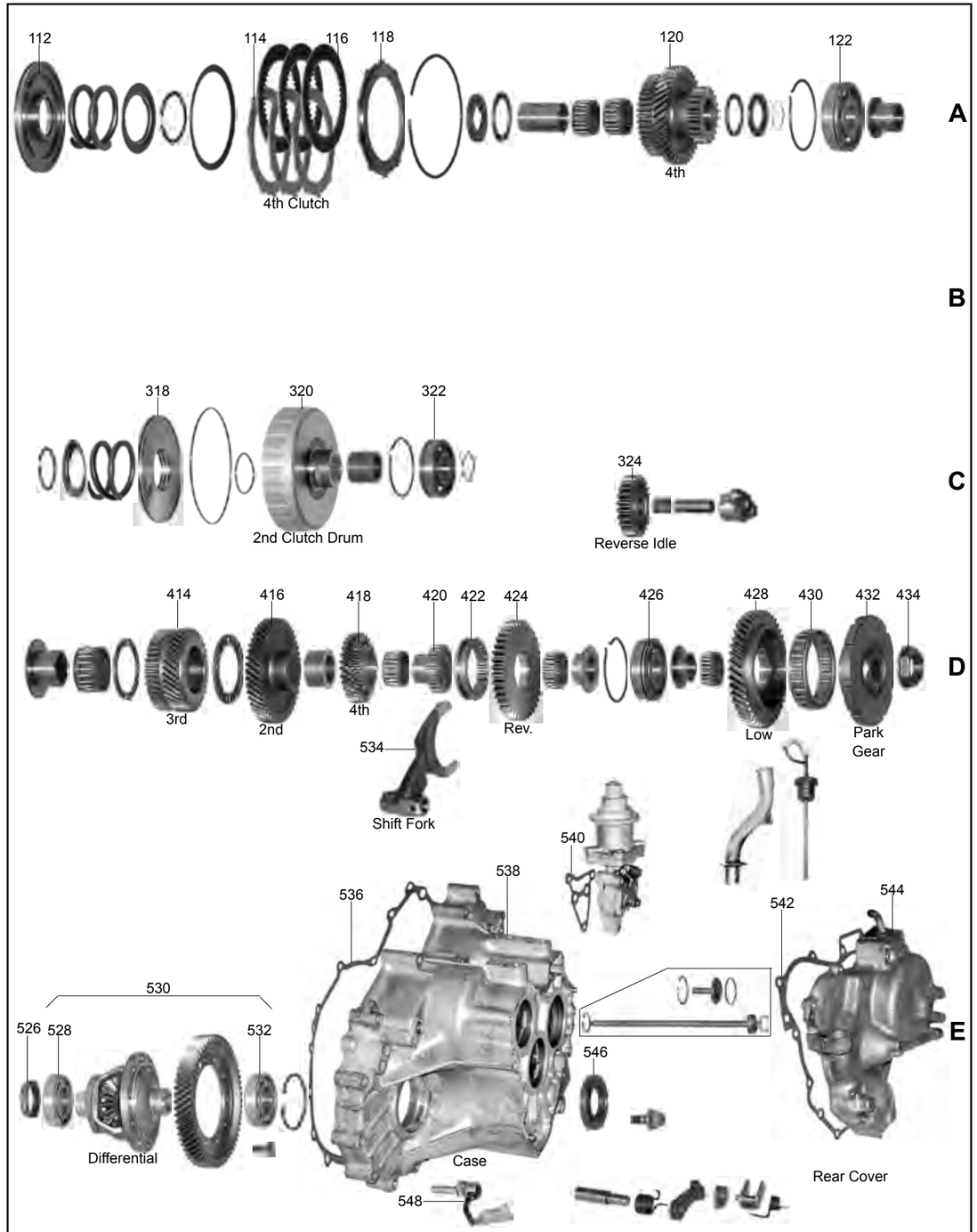
A
112
114
116
118
4th Clutch
120
4th
122
B
C
318
320
2nd Clutch Drum
322
324
Reverse Idle
D
414
416
418
420
422
424
426
428
430
432
434
3rd
2nd
4th
Rev.
Low
Park
Gear
534
Shift Fork
540
536
538
542
544
E
530
526
528
532
Differential
Case
546
548
Rear Cover

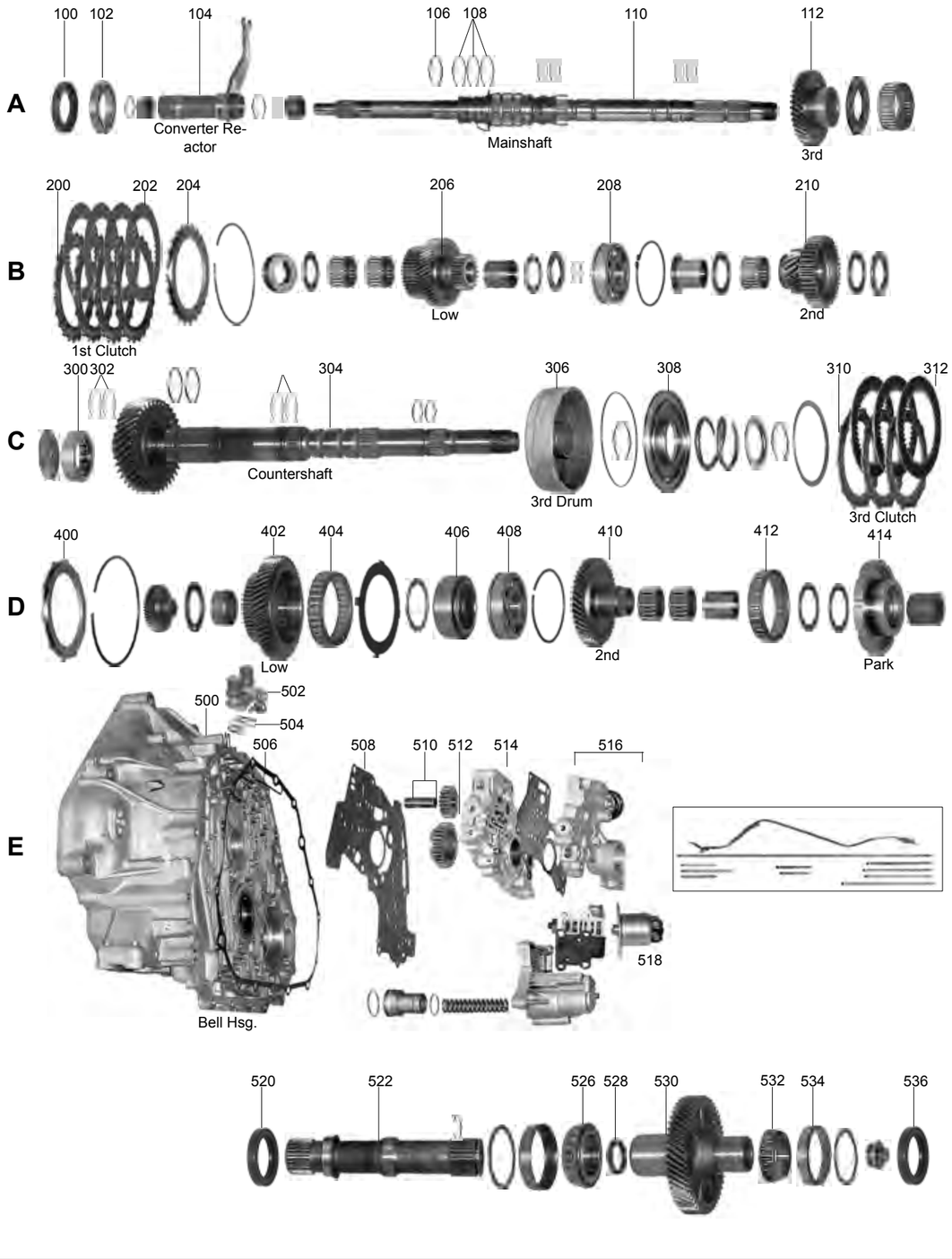
A
100
102
104
Converter Re-
actor
106
108
Mainshaft
110
112
3rd
B
200
202
204
1st Clutch
206
Low
208
210
2nd
C
300
302
304
Countershaft
306
3rd Drum
308
310
312
3rd Clutch
D
400
402
404
Low
406
408
410
2nd
412
414
Park
E
500
502
504
506
Bell Hsg.
508
510
512
514
516
518
520
522
526
528
530
532
534
536

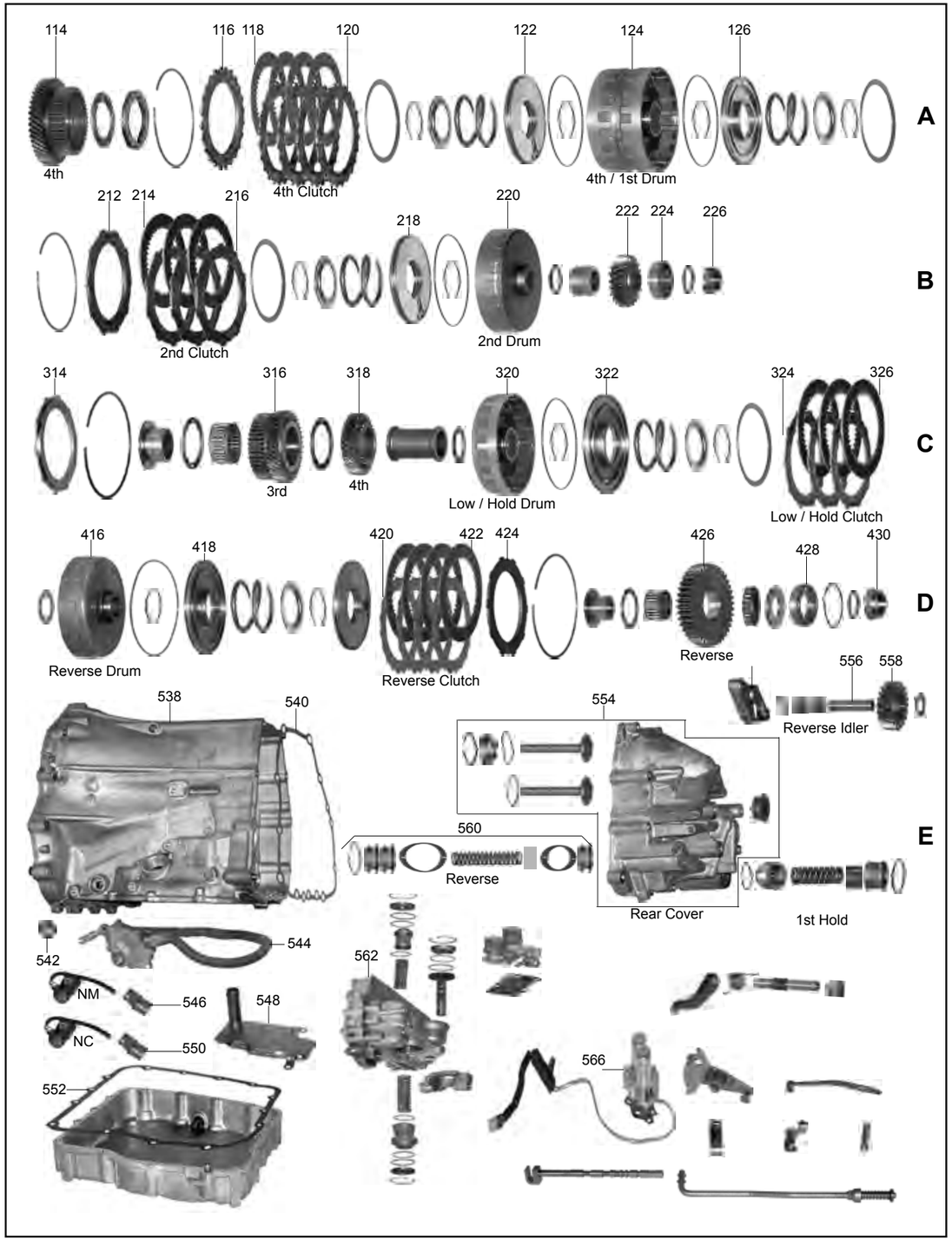
A
114
4th
116
118
4th Clutch
120
122
124
4th / 1st Drum
126
B
212
214
2nd Clutch
216
218
220
2nd Drum
222
224
226
C
314
316
3rd
318
4th
320
Low / Hold Drum
322
324
326
Low / Hold Clutch
D
416
Reverse Drum
418
420
Reverse Clutch
422
424
426
Reverse
428
430
556
558
Reverse Idler
E
538
540
554
560
Reverse
Rear Cover
1st Hold
542
544
NM
546
548
NC
550
552
562
566

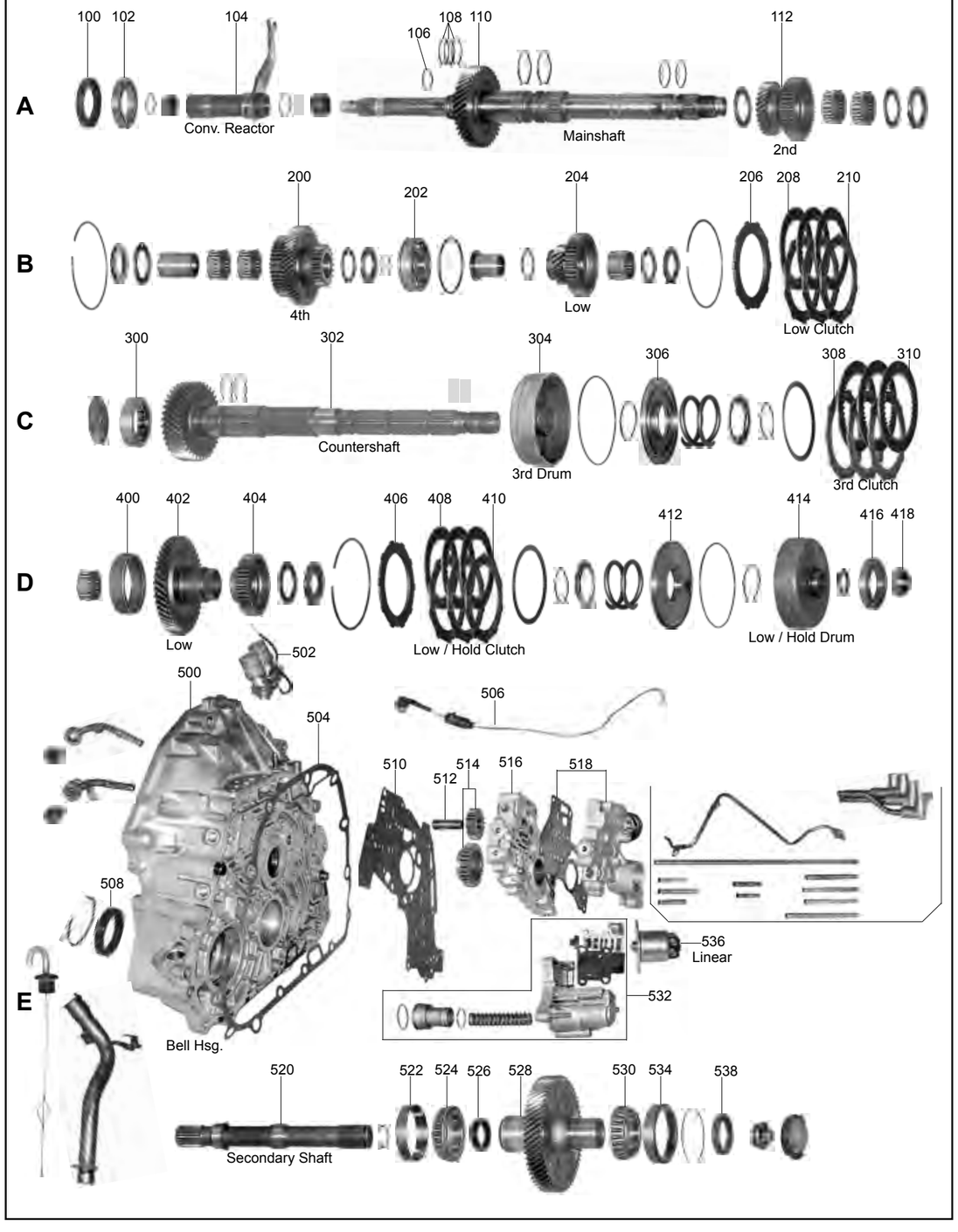
A
100
102
104
Conv. Reactor
106
108
110
Mainshaft
112
2nd
B
200
4th
202
204
Low
206
208
210
Low Clutch
C
300
302
Countershaft
304
3rd Drum
306
308
310
3rd Clutch
D
400
402
404
Low
406
408
410
Low / Hold Clutch
412
414
Low / Hold Drum
416
418
502
500
504
506
508
Bell Hsg.
510
512
514
516
518
536
Linear
532
E
520
Secondary Shaft
522
524
526
528
530
534
538

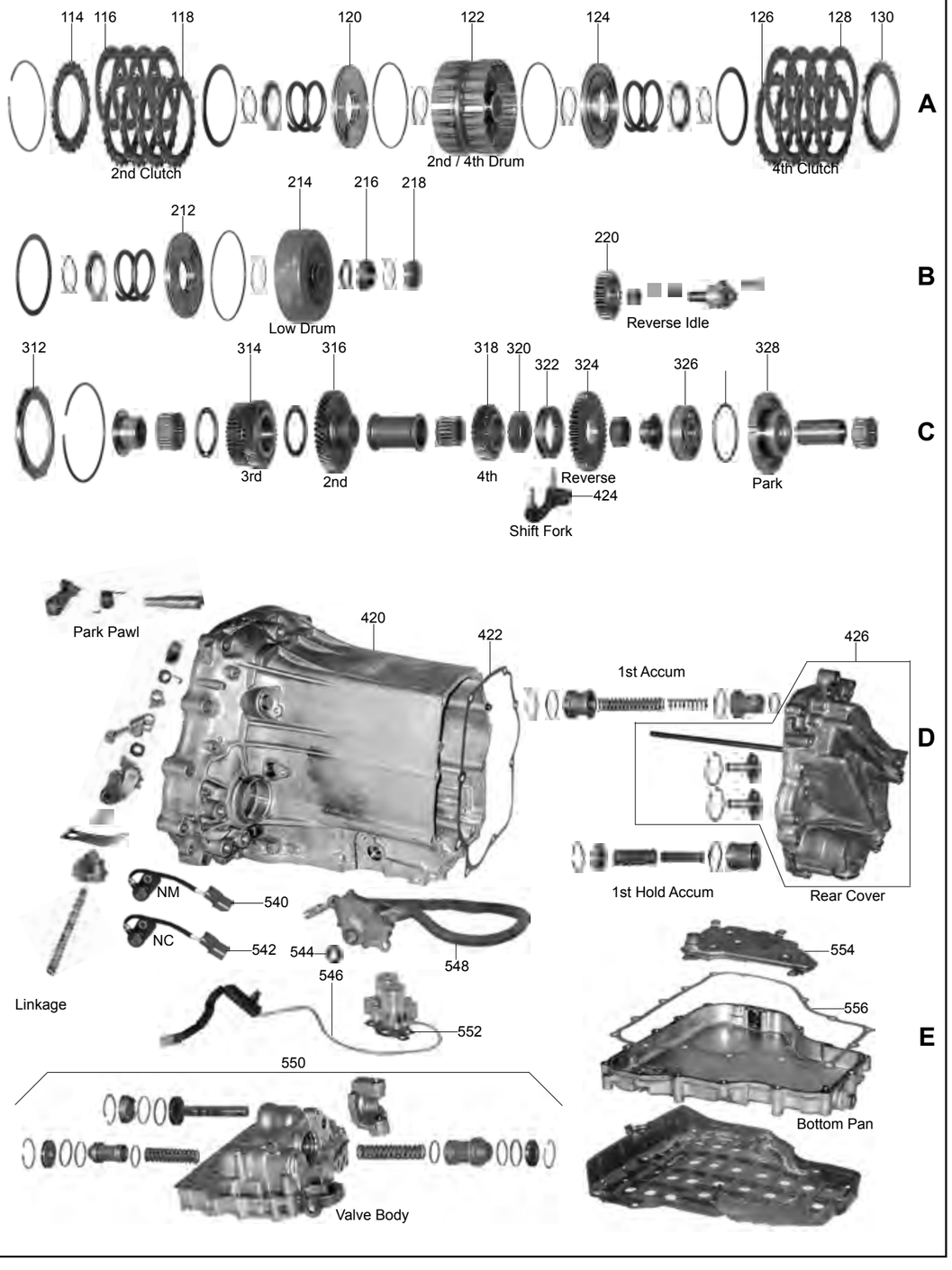
A
114
116
118
2nd Clutch
120
122
2nd / 4th Drum
124
126
128
130
4th Clutch
B
212
214
Low Drum
216
218
220
Reverse Idle
C
312
314
3rd
316
2nd
318
4th
320
322
Reverse
424
Shift Fork
324
326
328
Park
D
Park Pawl
420
422
426
1st Accum
1st Hold Accum
Rear Cover
NM
540
NC
542
544
548
Linkage
546
552
550
Valve Body
E
554
556
Bottom Pan

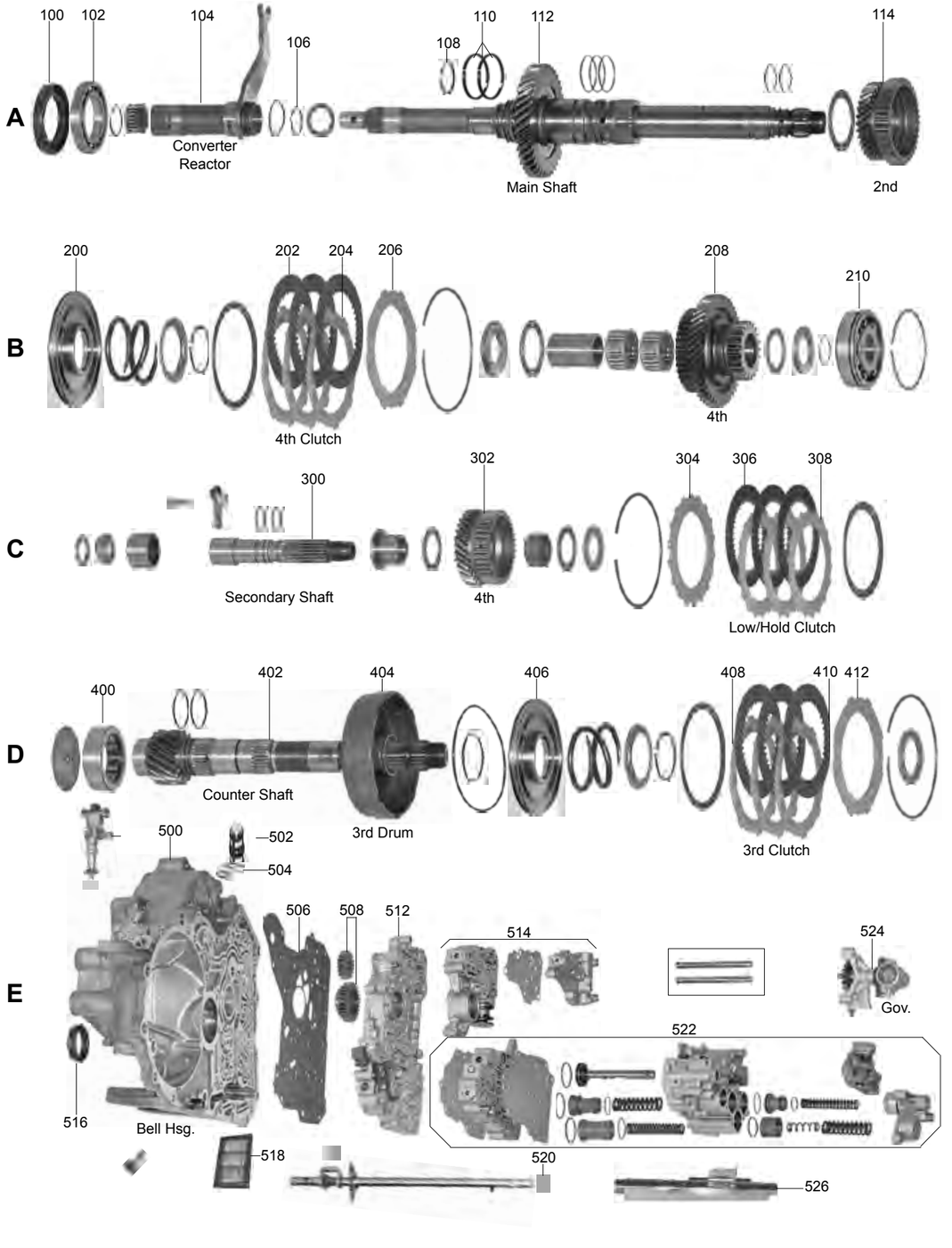
A
100
102
104
106
108
110
112
114
Converter
Reactor
Main Shaft
2nd
B
200
202
204
206
208
210
4th Clutch
4th
C
300
302
304
306
308
Secondary Shaft
4th
Low/Hold Clutch
D
400
402
404
406
408
410
412
Counter Shaft
3rd Drum
3rd Clutch
E
500
502
504
506
508
512
514
516
Bell Hsg.
518
520
522
524
Gov.
526

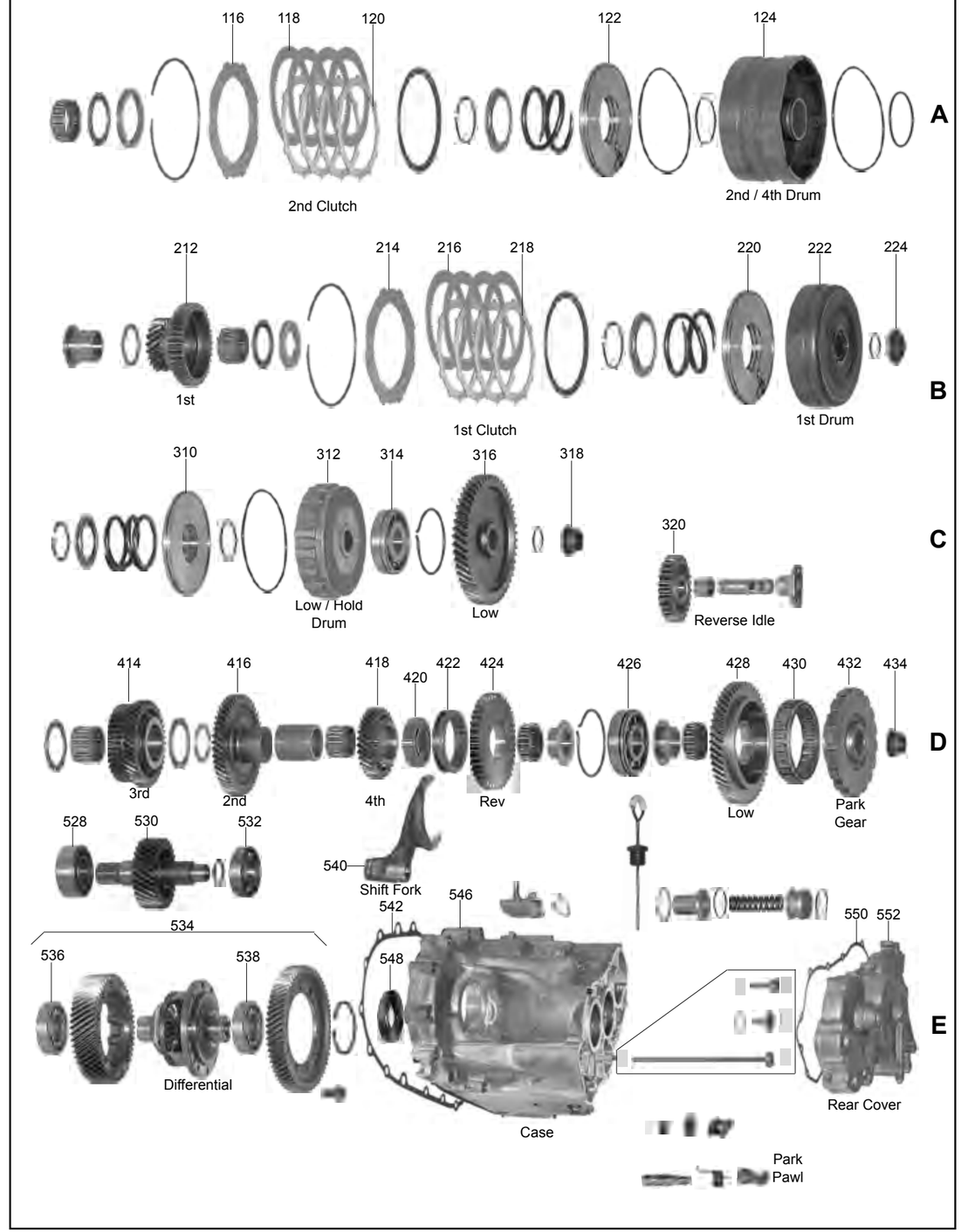
A
116
118
120
122
124
2nd Clutch
2nd / 4th Drum
B
212
214
216
218
220
222
224
1st
1st Clutch
1st Drum
C
310
312
314
316
318
320
Low / Hold
Drum
Low
Reverse Idle
D
414
416
418
420
422
424
426
428
430
432
434
3rd
2nd
4th
Rev
Low
Park
Gear
528
530
532
540
Shift Fork
534
536
538
542
546
548
550
552
Differential
Case
Rear Cover
Park
Pawl
E

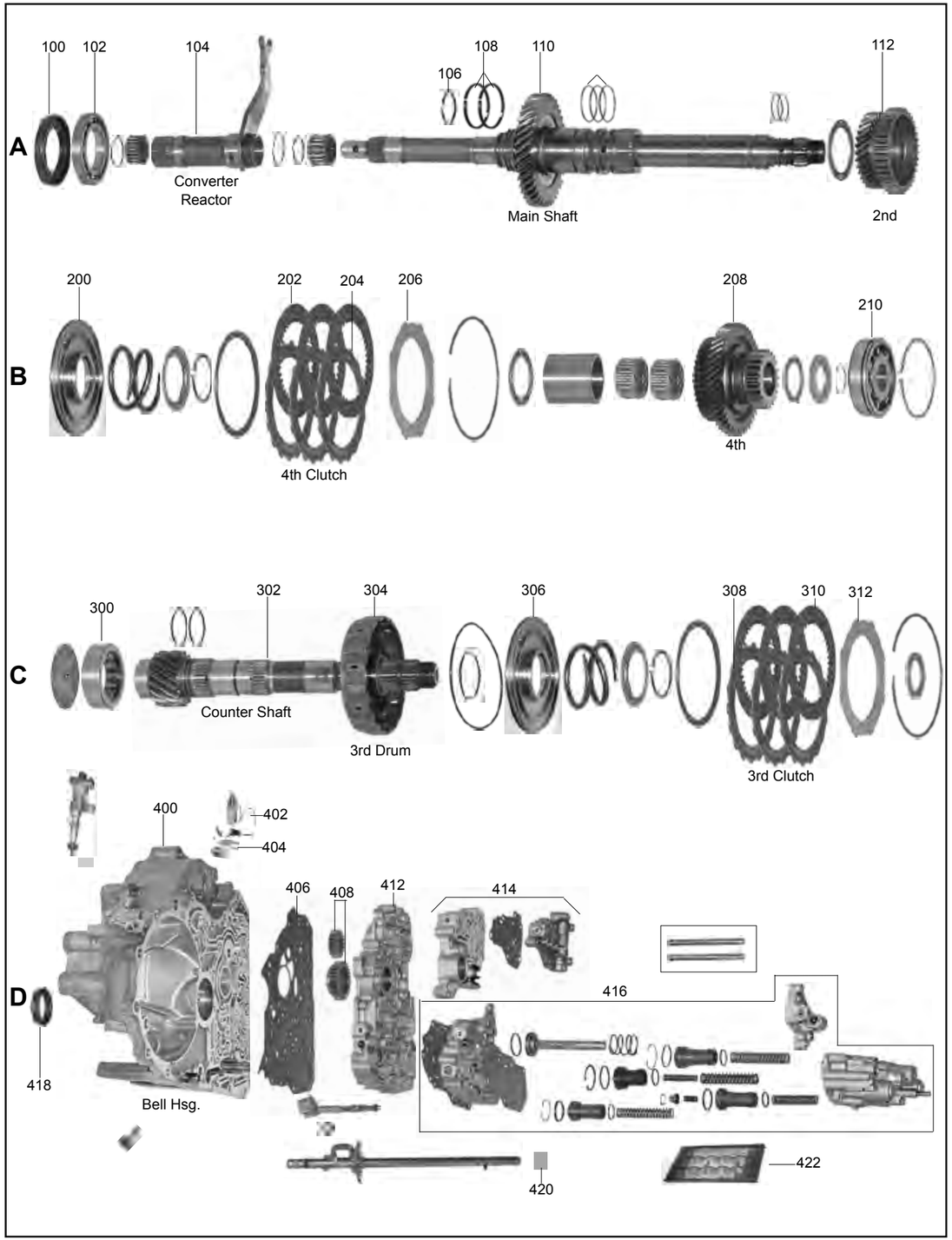
A
100
102
104
Converter
Reactor
106
108
110
Main Shaft
112
2nd
B
200
202
204
4th Clutch
206
208
4th
210
C
300
302
Counter Shaft
304
3rd Drum
306
308
310
312
3rd Clutch
D
400
402
404
406
408
412
414
416
418
Bell Hsg.
420
422

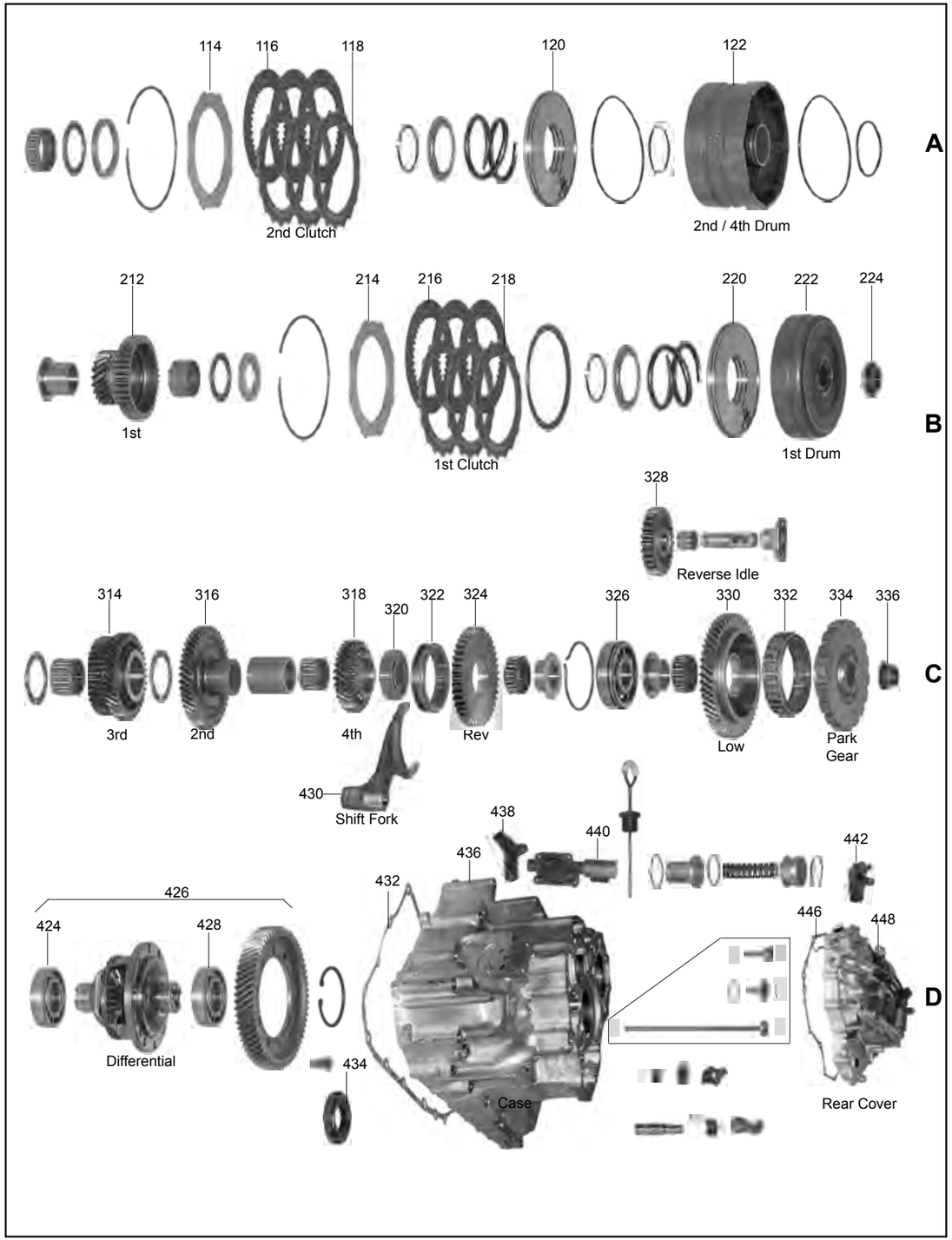
A
114
116
118
2nd Clutch
120
122
2nd / 4th Drum
B
212
1st
214
216
218
1st Clutch
220
222
224
1st Drum
328
Reverse Idle
C
314
3rd
316
2nd
318
4th
320
322
324
Rev
326
330
Low
332
334
Park
Gear
336
430
Shift Fork
438
436
440
442
426
424
428
Differential
432
434
Case
446
448
Rear Cover
D

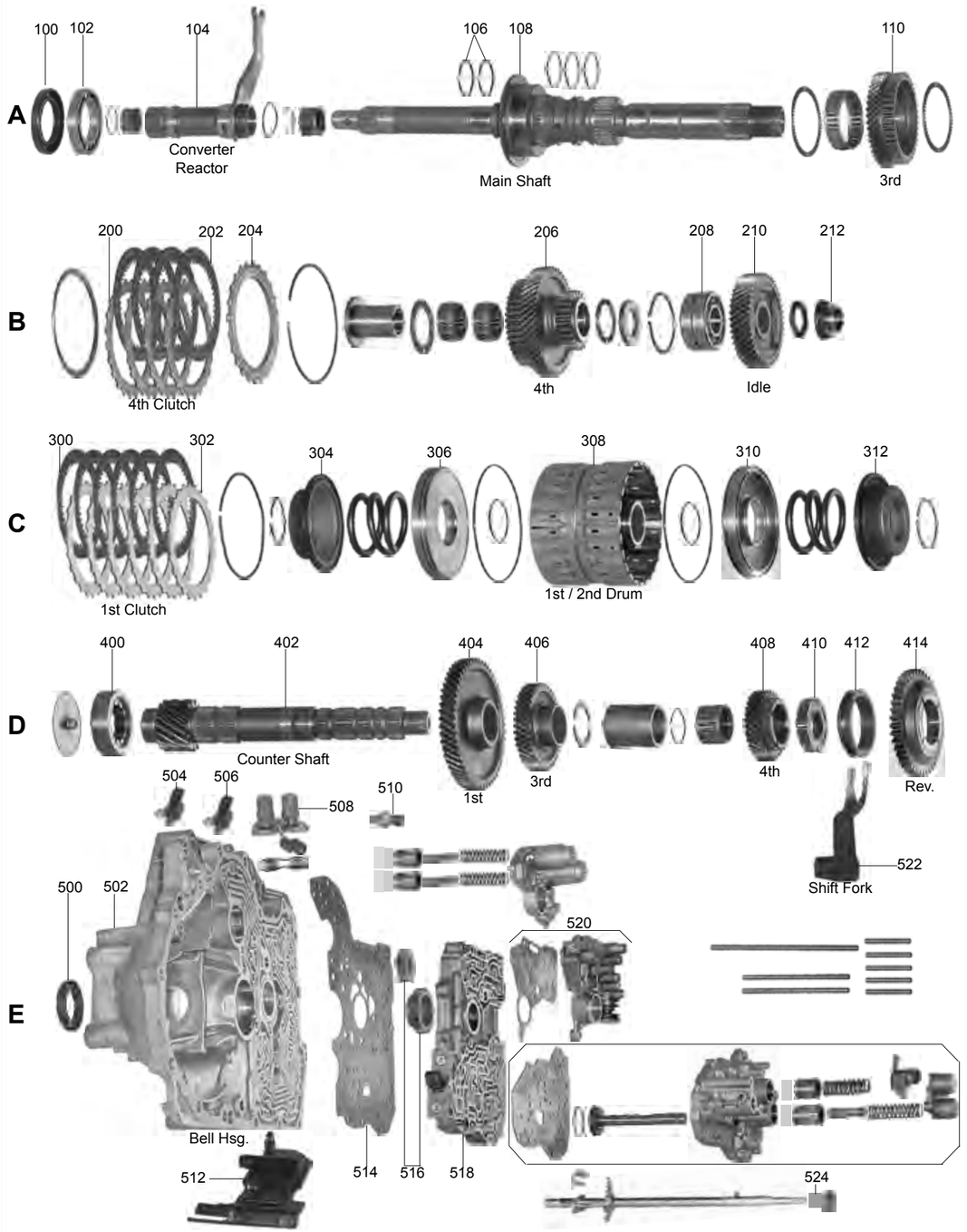
A
100
102
104
Converter
Reactor
106
108
Main Shaft
110
3rd
B
200
202
204
4th Clutch
206
4th
208
210
Idle
212
C
300
302
1st Clutch
304
306
308
1st / 2nd Drum
310
312
D
400
402
Counter Shaft
404
1st
406
3rd
408
4th
410
412
414
Rev.
504
506
508
510
500
502
Bell Hsg.
512
514
516
518
520
522
Shift Fork
524
E

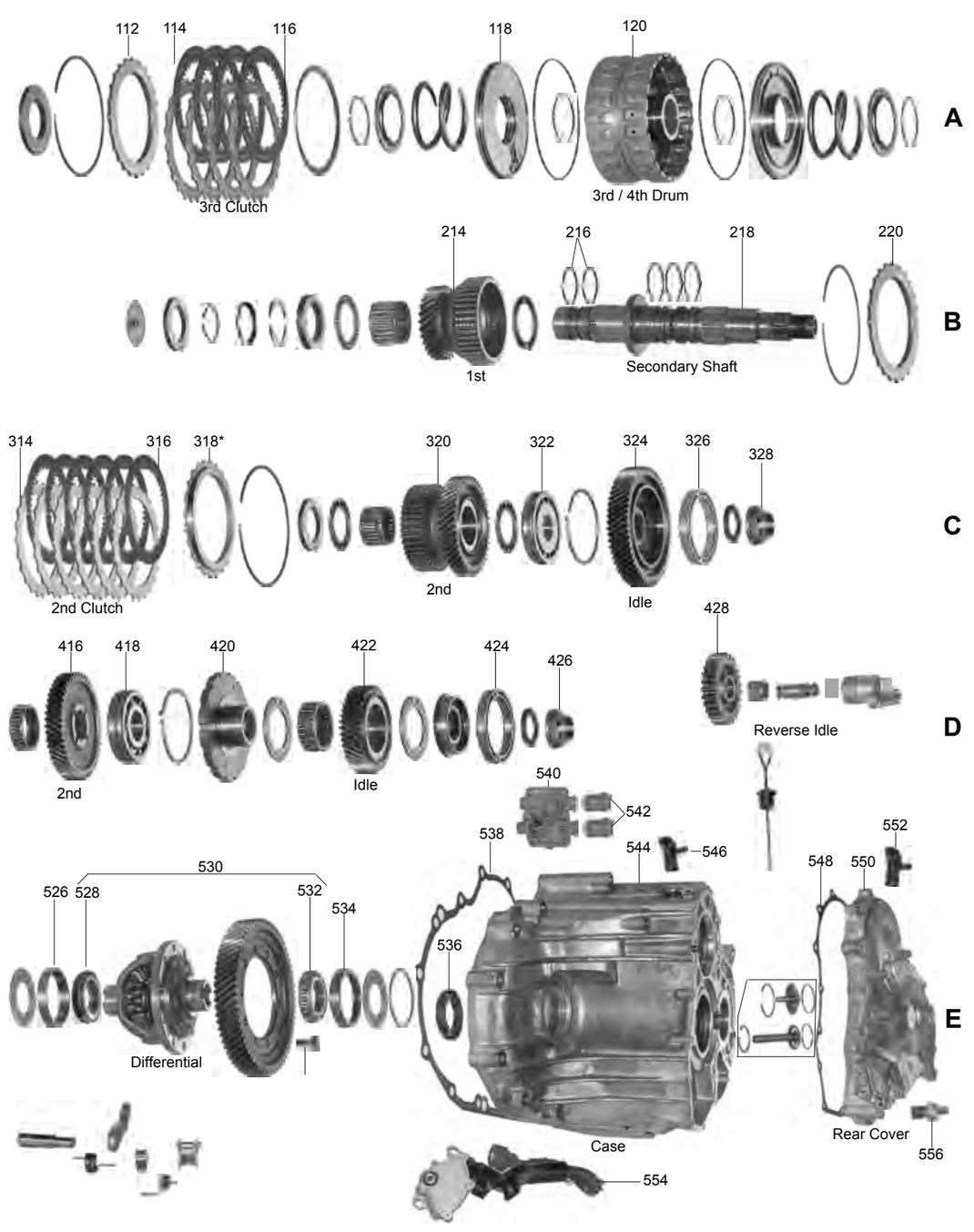
A
112
114
3rd Clutch
116
118
120
3rd / 4th Drum
B
214
1st
216
218
Secondary Shaft
220
C
314
2nd Clutch
316
318*
320
2nd
322
324
Idle
326
328
428
Reverse Idle
D
416
2nd
418
420
422
Idle
424
426
540
542
538
544
546
552
548
550
530
526
528
532
534
536
Differential
Case
Rear Cover
554
556
E

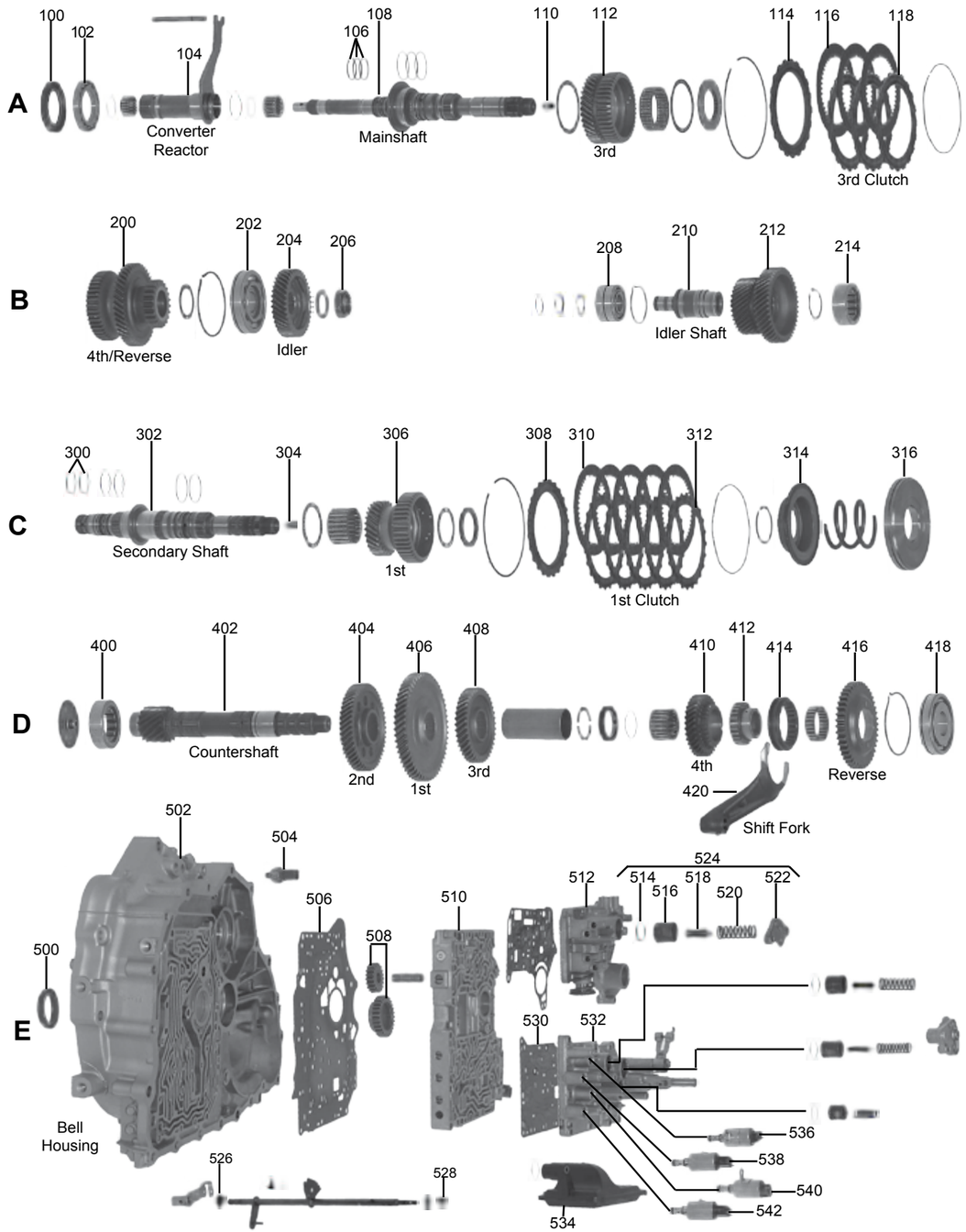
A
100
102
104
Converter
Reactor
106
108
Mainshaft
110
112
3rd
114
116
118
3rd Clutch
B
200
202
204
206
4th/Reverse
Idler
208
210
212
214
Idler Shaft
C
300
302
304
Secondary Shaft
306
1st
308
310
312
1st Clutch
314
316
D
400
402
Countershaft
404
2nd
406
1st
408
3rd
410
4th
412
414
420
Shift Fork
416
Reverse
418
E
500
502
504
Bell
Housing
506
508
510
512
524
514
516
518
520
522
526
528
530
532
534
536
538
540
542

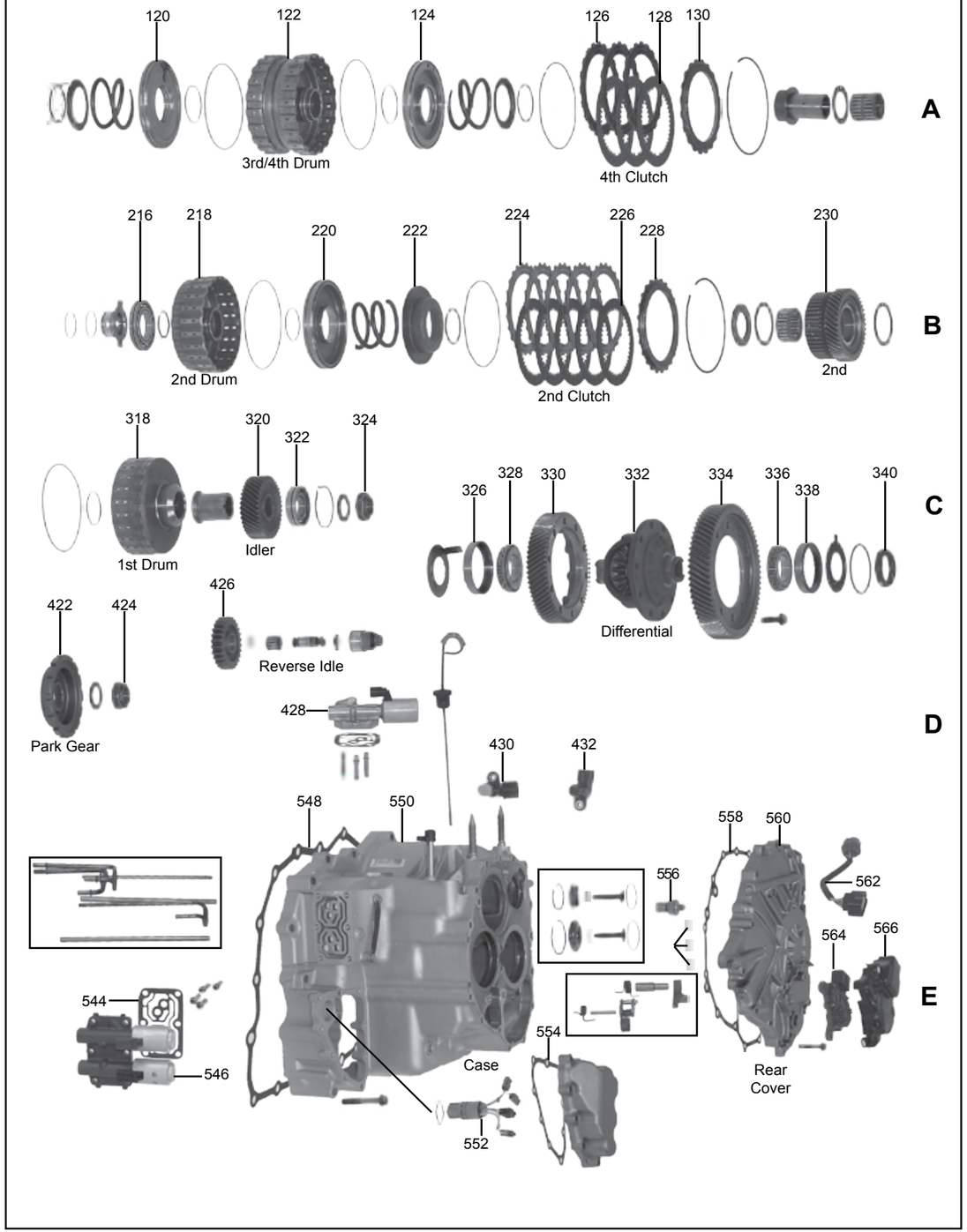
A
120
122
3rd/4th Drum
124
126
128
130
4th Clutch
B
216
218
2nd Drum
220
222
224
226
228
2nd Clutch
230
2nd
C
318
320
322
324
1st Drum
Idler
326
328
330
332
Differential
334
336
338
340
D
422
424
Park Gear
426
Reverse Idle
428
430
432
E
544
546
548
550
Case
552
554
556
558
560
Rear
Cover
562
564
566

HONDA 4 Speed
Quick Reference Guide

Model	Years	Trans	ILL Type	With Steels	Less Steels	Overhaul	Friction Module	Steel Module	Filter	Front Seal	Left Seal	Right Seal
ACURA												
2.2 CL	96-97	A6VA	2	80006A	80004A	80002A	80119A	80139A	80010A	80070A	80077A	80076A
2.3 CL	98-99	B6VA	10	30006C	30004C	30002C	30119C	30139C	30010C	80070A	80077A	80076A
2.5 TL	95-98	M1WA	6	70006D	70004D	70002D	70119D	70139D	70010D	80070A	70077CA	70076CA
3.0 CL	96-99	M7ZA	10	20006C	20004C	20002C	20119C	20139C	20010C	90070N	80077A	20076C
3.2 TL	96-98	M5HA	5	70006H	70004H	70002B	70119H	70139H	70010B	70070BA	70077BA	70076BA
3.2 TL	1999	B7VA	10	20006M	20004M	20002M	20119M	20139M	20010C	70070BA	80077A	20076C
3.5 RL	96-04	M5DA	5	70006H	70004H	70002B	70119H	70139H	70010B	70070BA	70077BA	70076BA
INTEGRA	1990	RO	3	170006A	170004A	170002A	170119A	170139A	170010A	80070A	80077A	90076H
INTEGRA	91-93	MPRA	3	170006A	170004A	170002A	170119A	170139A	170010A	80070A	80077A	90076H
INTEGRA	94-95	MP7A, SP7A	7	90006H	90004H	90002H	90119H	90139H	90010E	80070A	90077C	90076H
INTEGRA	96-99	S4XA	7	90006H	90004H	90002H	90119H	90139H	90010E	80070A	90077C	90076H
INTEGRA	00-01	SKWA	7	90006H	90004H	90002H	90119H	90139H	90010E	80070A	90077C	90076H
LEGEND	91-95	MPYA	5	70006B	70004B	70002B	70119B	70139B	70010B	70070BA	70077BA	70076BA
NSX	91-05	MR9A	N.L.	190006A	190004A	190002A	190119A	190139A	190010A	190070A	190077A	190076A
VIGOR	92-94	MPWA	6	70006C	70004C	70002C	70119C	70139C	70010C	80070A	70077CA	70076CA
HONDA												
ACCORD	1990	PX4B	2	80006A	80004A	80002A	80119A	80139A	80010	80070A	80077A	80076A
ACCORD (USA Built)	1991	APX4	2	80006A	80004A	80002A	80119A	80139A	80010	80070A	80077A	80076A
ACCORD (Japan Built)	1991	MPXA	2	80006A	80004A	80002A	80119A	80139A	80010	80070A	80077A	80076A
ACCORD (Wagon)	1991	APXA	2	80006A	80004A	80002A	80119A	80139A	80010A	80070A	80077A	80076A
ACCORD (USA Built)	1992	APX4	2	80006A	80004A	80002A	80119A	80139A	80010A	80070A	80077A	80076A
ACCORD (Japan Built)	1992	MPWA	2	80006A	80004A	80002A	80119A	80139A	80010A	80070A	80077A	80076A
ACCORD	1993	MPXA	2	80006A	80004A	80002A	80119A	80139A	80010A	80070A	80077A	80076A
ACCORD (4 Cyl.)	94-97	MPOA,AOYA,BOYA	2	80006A	80004A	80002A	80119A	80139A	80010A	80070A	80077A	80076A
ACCORD (V6)	95-97	MPZA	N.L.	30006A	30004A	30002A	30119A	30139A	30010A	90070N	80077A	20076C
ACCORD (4 Cyl.) (USA Built)	98-02	BAXA	10	30006C	30004C	30002C	30119C	30139C	30010C	80070A	80077A	80076A
ACCORD (4 Cyl.) (Japan)	98-02	MAXA	10	30006C	30004C	30002C	30119C	30139C	30010C	80070A	80077A	80076A
ACCORD (V6)	98-02	B7XA	10	20006C	20004C	20002C	20119C	20139C	20010C	90070N	80077A	20076C
CIVIC (Awd)	89-90	S5, MPSA	7	90006A	90004A	90002A	90119A	90139A	60010Y	80070A	90077A	90076H
CIVIC	92-95	A24A, A2YA	7	90006C	90004C	90002D	90119C	90139C	90010B	80070A	90077C	90076C
CIVIC (Exc. HX)	1996	A4RA	8	90006D	90004D	90002D	90119D	90139D	90010E	80070A	90077C	90076C
CIVIC (Exc. HX)	97-98	B4RA,B46A,M4RA	8	90006D	90004D	90002D	90119D	90139D	90010E	80070A	90077C	90076C
CIVIC (Exc. HX)	99-00	BDRA,S4RA	8	90006D	90004D	90002D	90119D	90139D	90010D	80070A	90077C	90076C
CIVIC (Exc. GX, HX)	01-05	BMXA,SLXA	8	90006M	90004M	90002M	90119M	90139M	90010D	80070A	90077C	90076C
CR-V (Fwd)	98-01	MDLA	7	90006H	90004H	90002H	90119H	90139H	90010D	80070A	90077C	90076H
CR-V (Awd)	97-01	M4TA, MDMA	7	90006H	90004H	90002H	90119H	90139H	90010E	80070A	90077C	90076H
CR-V	02-04	MCVA, MRVA	11	90006N	90004N	90002N	90119N	90139N	90010N	90070N	80077A	90076N
DEL SOL	93-97	M24A, S24A	7	90006C	90004C	90002D	90119C	90139C	90010B	80070A	90077C	90076C
ELEMENT	03-04	BZKA, MZKA	11	90006N	90004N	90002N	90119N	90139N	90010N	90070N	80077A	90076N
ELEMENT	05-06	BZKA, MZKA	11	90006NA	90004N	90002N	90119NA	90139N	TBA	90070N	80077A	90076N
ODYSSEY	95-97	MPJA	2	80006A	80004A	80002A	80119A	80139A	80010A	80070A	90077C	80076A
ODYSSEY	1998	MDWA	10	30006C	30004C	30002C	30119C	30139C	30010C	80070A	90077C	80076A
ODYSSEY	99-01	B7YA, B7TA	10	20006M	20004M	20002M	20119M	20139M	20010C	90070N	80077A	20076C
PRELUDE S	92-96	MP1A, MP1B	2	80006A	80004A	80002A	80119A	80139A	80010A	80070A	80077A	80076A
PRELUDE SI	92-96	MP1A, MP1B	2	80006B	80004A	80002A	80119B	80139A	80010A	80070A	80077A	80076A
PRELUDE	97-01	M6HA	10	30006C	30004C	30002C	30119C	30139C	30010C	80070A	90077C	80076A

HONDA 4 Speed
Quick Reference Guide

Notes

ILL.		Qty.	Year	Part #	Ref. #
MASTER OVERHAUL KITS (WITH STEELS)					
N.I.	See Honda 4 Speed Guide	AR			N.L.
MASTER OVERHAUL KITS (LESS STEELS)					
N.I.	See Honda 4 Speed Guide	AR			N.L.
OVERHAUL KITS (WITH RINGS AND SEALS)					
N.I.	See Honda 4 Speed Guide	AR			N.L.
SUB KITS					
N.I.	Sub Kit, Honda CR-V, Element Transfer Case	1	97-Up	90001	N.L.
BONDED PISTONS					
N.I.	Retainer Piston (Bonded) 3.570 X .710	1	97-Up	30967	22533-RPC-003
N.I.	Retainer Piston (Bonded) 3.940 X 1.050	1	97-Up	80962	22533-PAX-003
N.I.	Retainer Piston (Bonded) 3.940 X 1.360	1	97-Up	80962B	22533 P7X 023
N.I.	Retainer Piston (Bonded) 4.090 X 1.050	1	97-Up	30967B	22533-P7V-J010
N.I.	Retainer Piston (Bonded) 4.090 X 1.360	1	97-Up	80962A	22533-P7V-9010
N.I.	Retainer Piston (Bonded) 4.200 X .880	1	97-Up	30962	22533-PRP-003
N.I.	Retainer Piston (Bonded) 4.260 X .880	1	97-Up	30967A	22533-RCL-A01
GASKETS & O-RINGS					
N.I.	Gasket, Bottom Pan (2.5TL, Vigor MPWA, M1WA)	1	92-98	70300C	21813-PW7-000
N.I.	Gasket, Bottom Pan (Legend MPYA)	1	91-95	70300B	21813-PY4-000
N.I.	Gasket, Bottom Pan (3.2TL, 3.5RL, M5DA, M5HA)	1	96-01	70300D	21813-P5H-003
N.I.	O-Ring, Converter Hub (32.0mm ID)	1	89-05	60381D	91302-639-000
N.I.	O-Ring, Converter Hub (35.5mm ID)	1	89-05	30381	N.L.
METAL CLAD SEALS					
N.I.	Converter - See Honda 4 Speed Guide	AR			N.L.
N.I.	Axle, Left - See Honda 4 Speed Guide	AR			N.L.
N.I.	Axle, Right - See Honda 4 Speed Guide	AR			N.L.
N.I.	Manual Shaft (12 x 22 x 7mm)	1	89-Up	60072	31375-31X01
N.I.	Throttle Shaft (9 x 18 x 17mm)	1	89-Up	60072A	91201-PA9-004
N.I.	Secondary Shaft, Front (50 x 70 x 11mm) (M1WA & Vigor MPWA)	1	91-Up	70076C	91206-PW5-015
N.I.	Secondary Shaft, Front (55 x 75 x 11mm) (MPYA, M5DA, M5HA) (Legend)	1	91-Up	70076B	91201-PY5-005
N.I.	Secondary Shaft, Rear (40 x 56 x 9mm) (M1WA & Vigor MPWA)	1	91-Up	60077H	91206-PG2-005
N.I.	Secondary Shaft, Rear (45 x 61 x 8mm) (MPYA, M5DA, M5HA) (Legend)	1	91-Up	70077B	91205-PY5-005
N.I.	Transfer Gear Input (CR-V)	1	97-04	60077H	91206-PG2-005
FRICTIONS					
N.I.	Friction Modules - See Honda 4 Speed Guide	AR			
STEELS					
N.I.	Steel Modules - See Honda 4 Speed Guide	AR			
FILTERS & FILTER KITS					
N.I.	Filter - See Honda 4 Speed Guide	AR			
N.I.	Filter Kit, M1WA, MPWA Vigor, MP7A, S4XA, SKWA, SP7A	1	94-01	70011C	N.L.
N.I.	Filter Kit, MPYA, M5DA, M5HA	1	91-01	70011B	N.L.
N.I.	Screen, Valve Body (Some) (.670" x .325")	AR	88-Up	80015	27750-PL5-J01
BUSHINGS					
N.I.	Kit, A6VA/AOYA/APXA/BOYA/MP1A/MPXA/MPOA/PX4B	1	90-Up	80030A	N.L.
N.I.	Kit, A24A/M24A/M4TA/P24A/S24A/SDMA	1	90-Up	80030B	N.L.
N.I.	Kit, A4RA/MP7A/S4XA/SP7A/MPRA/MY8A/PY8A/RO	1	90-Up	80030C	N.L.
N.I.	Kit, MPWA/MPZA/B6VA/BAXA/M6HA/M7ZA	1	90-Up	80030D	N.L.
N.I.	Kit, MPYA	1	90-Up	80030E	N.L.
N.I.	Bushing, Main, Pinion, Secondary Shaft (.412" OD)	3	90-Up	60052A	N.L.
N.I.	Bushing, Main, Pinion Shaft (.395" OD) Small Tube Bushing	2	91-Up	60052B	N.L.
N.I.	Bushing, Main, Pinion Shaft (.535" OD) Large Tube Bushing	2	91-Up	60052C	N.L.
N.I.	Tool, Bushing Remover & Installer	1	91-Up	T-28999	N.L.

ILL.		Qty.	Year	Part #	Ref. #
THRUST WASHERS/BEARINGS					
BEARINGS					
N.I.	Differential Bearing & Race (A6VA, AOYA, APXA, BOYA Bell)	1	91-99	80289CK	91122-PK4-013
N.I.	Differential Bearing & Race (A6VA, AOYA, APXA, BOYA Case)	1	91-99	80289BK	91006-PG4-003
N.I.	Differential Bearing & Race (B7TA, B7VA Bell)	1	99-01	80289JK	91121-P7T-305
N.I.	Differential Bearing & Race (B7TA, B7VA Case)	1	99-01	80289FK	91124-PGH-305
N.I.	Differential Bearing & Race (B7XA Bell 98)	1	1998	80289K	91122-P6H-013
N.I.	Differential Bearing & Race (B7XA Bell 99-02)	1	99-02	80289EK	91122-P7V-J02
N.I.	Differential Bearing & Race (B7XA Case 98)	1	1998	80289AK	91121-P6H-013
N.I.	Differential Bearing & Race (B7XA Case 99-02)	1	99-02	80289DK	91121-P7V-J02
N.I.	Differential Bearing & Race (BAXA Bell)	1	98-02	80289K	91122-P6H-013
N.I.	Differential Bearing & Race (BAXA Case)	1	98-02	80289AK	91121-P6H-013
N.I.	Differential Bearing & Race (M7ZA, MAXA Bell)	1	96-02	80289AK	91121-P6H-013
N.I.	Differential Bearing & Race (M7ZA, MAXA Case)	1	96-02	80289K	91122-P6H-013
N.I.	Differential Bearing & Race (MPIA, MPOA Bell)	1	91-99	80289CK	91122-PK4-013
N.I.	Differential Bearing & Race (MPIA, MPOA Case)	1	91-99	80289BK	91006-PG4-003
VALVE BODY RECALIBRATION KITS					
N.I.	Valve Body Kit, 4 Cyl. (.323" CPC Valve)	1	97-05	90165	N.L.
N.I.	Valve Body Kit, 4 Cyl. (.365" CPC Valve)	1	98-04	80165	N.L.
N.I.	Valve Body Kit, 6 Cyl. (.388" CPC Valve)	1	98-04	80165A	N.L.
N.I.	Lube Kit, Odyssey, Acura 3.2TL (Transgo)	1	98-04	T80168	N.L.
MISCELLANEOUS COMPONENTS					
N.I.	Nuts, Main Shaft (18mm) (Left Hand) (12 Point)	1	83-Up	60795A	90202-PG4-020
N.I.	Nuts, Main Shaft (18mm) (Right Hand) (12 Point)	1	89-Up	60796C	N.L.
N.I.	Nuts, Main Shaft (20mm) (Left Hand) (12 Point)	1	96-Up	80795D	90201-P4P-000
N.I.	Nuts, Main Shaft (23mm) (Left Hand) (6 Point)	1	90-97	80795	90201-PX4-010
N.I.	Nuts, Main Shaft (23mm) (Left Hand) (6 Point)	1	98-Up	80796D	90203-P0Z-000
N.I.	Nuts, Secondary Shaft (22mm) (Left Hand) (6 Point)	1	96-Up	80796B	90202-P56-000
N.I.	Nuts, Secondary Shaft (23mm) (Right Hand) (6 Point)	1	90-97	80796	90203-PX4-010
N.I.	Nuts, Secondary Shaft (23mm) (Right Hand) (6 Point)	1	98-Up	80795C	90201-P0Z-000
N.I.	Nuts, Counter Shaft (18mm) (Left Hand) (6 Point)	1	83-Up	60795C	N.L.
N.I.	Nuts, Counter Shaft (19mm) (Right Hand) (6 Point)	1	83-Up	60796A	90201-689-900
N.I.	Nuts, Counter Shaft (22mm) (Left Hand) (6 Point)	1	96-Up	80796B	90202-P56-000
N.I.	Nuts, Counter Shaft (22mm) (Right Hand) (6 Point)	1	83-Up	80796A	N.L.
N.I.	Nuts, Counter Shaft (23mm) (Right Hand) (6 Point)	1	98-Up	80795C	90201-P0Z-000
N.I.	Nuts, Counter Shaft (23mm) (Right Hand) (6 Point)	1	90-97	80796	90203-PX4-010
N.I.	Cushion Spring (Waved to Replace Dished) (120mm)	4	90-Up	80850A	N.L.
N.I.	Cushion Spring (Waved to Replace Dished) (116mm)	4	85-Up	60850C	N.L.
TECHNICAL MANUALS					
N.I.	Tech Manual (BAXA, MAXA, M6HA)	1	97-02	80400C	N.L.
N.I.	Tech Manual (MPWA Vigor, M1WA 2.5TL)	1	92-98	70400C	N.L.
N.I.	Tech Manual (MPYA)	1	91-05	70400B	N.L.
N.I.	Tech Manual (PX4B, APX4, MPWA Accord, MP1A Prelude)	1	90-92	80400	N.L.
N.I.	Tech Manual (RO, MPRA)	1	90-93	70400A	N.L.
N.I.	Tech Manual (S5, MPSA, P24, A2Y2)	1	89-91	90400A	N.L.

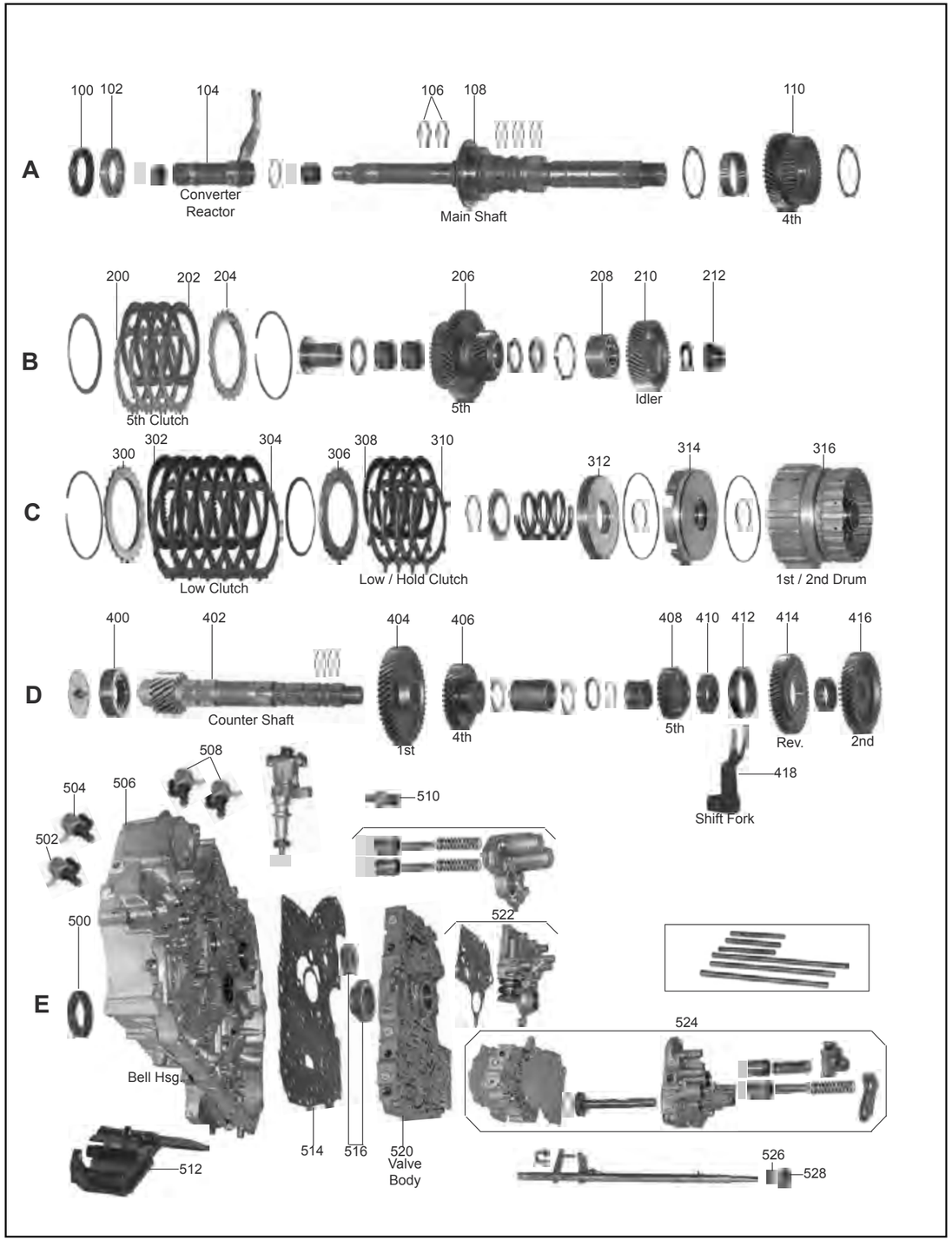
A
100 102 104 106 108 110
Converter Reactor
Main Shaft
4th
B
200 202 204 206 208 210 212
5th Clutch
5th
Idler
C
300 302 304 306 308 310 312 314 316
Low Clutch
Low / Hold Clutch
1st / 2nd Drum
D
400 402 404 406 408 410 412 414 416
Counter Shaft
1st
4th
5th
Rev.
2nd
418
Shift Fork
E
500 502 504 506 508 510 512 514 516 520 522 524 526 528
Bell Hsg.
Valve Body

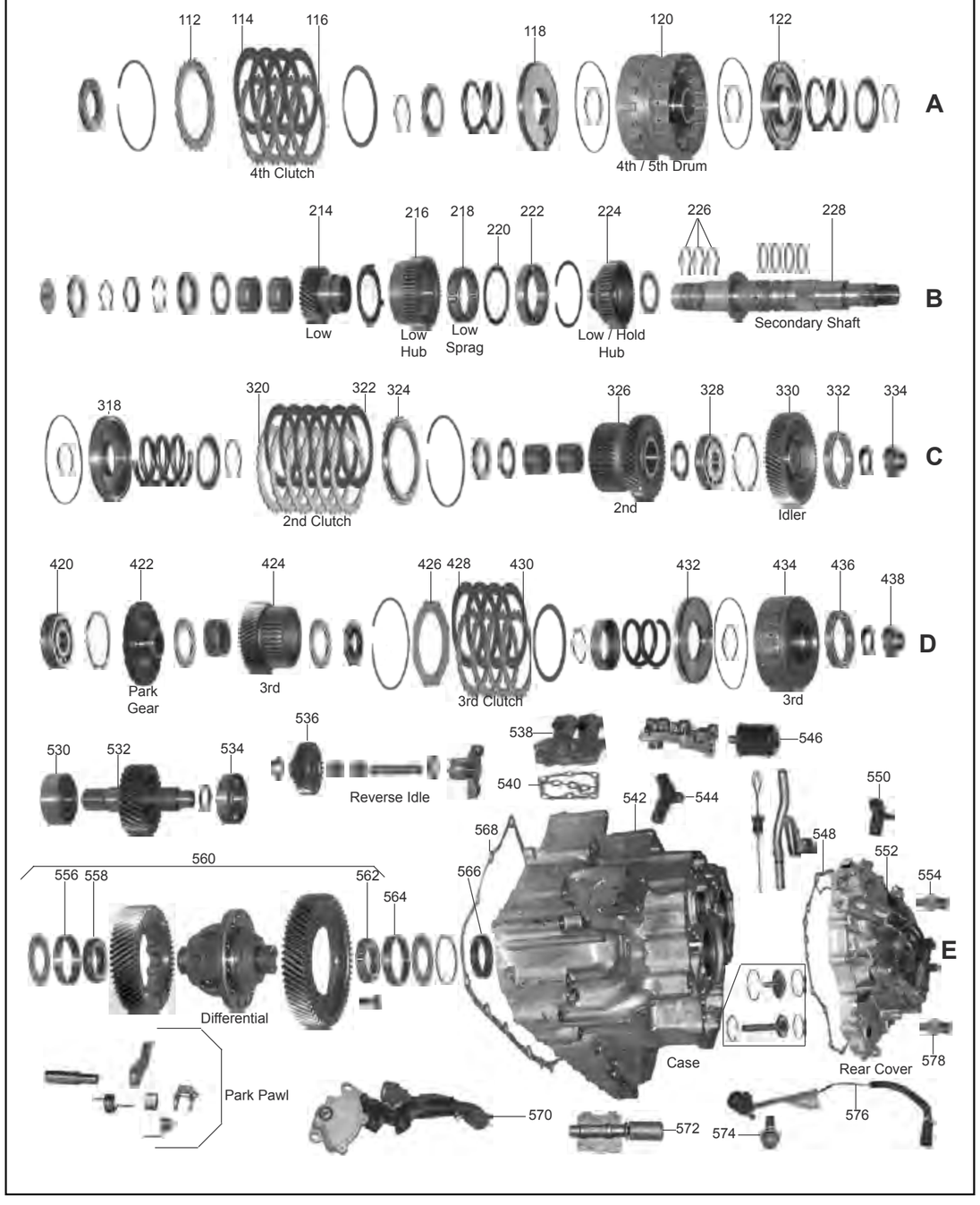
A
112 114 116 118 120 122
4th Clutch
4th / 5th Drum
B
214 216 218 220 222 224 226 228
Low
Low Hub
Low Sprag
Low / Hold Hub
Secondary Shaft
C
318 320 322 324 326 328 330 332 334
2nd Clutch
2nd
Idler
D
420 422 424 426 428 430 432 434 436 438
Park Gear
3rd
3rd Clutch
3rd
530 532 534 536 538 540 542 544 546 548 550 552 554
Reverse Idle
560 562 564 566 568
556 558
Differential
Case
Rear Cover
578
Park Pawl
570 572 574 576
E

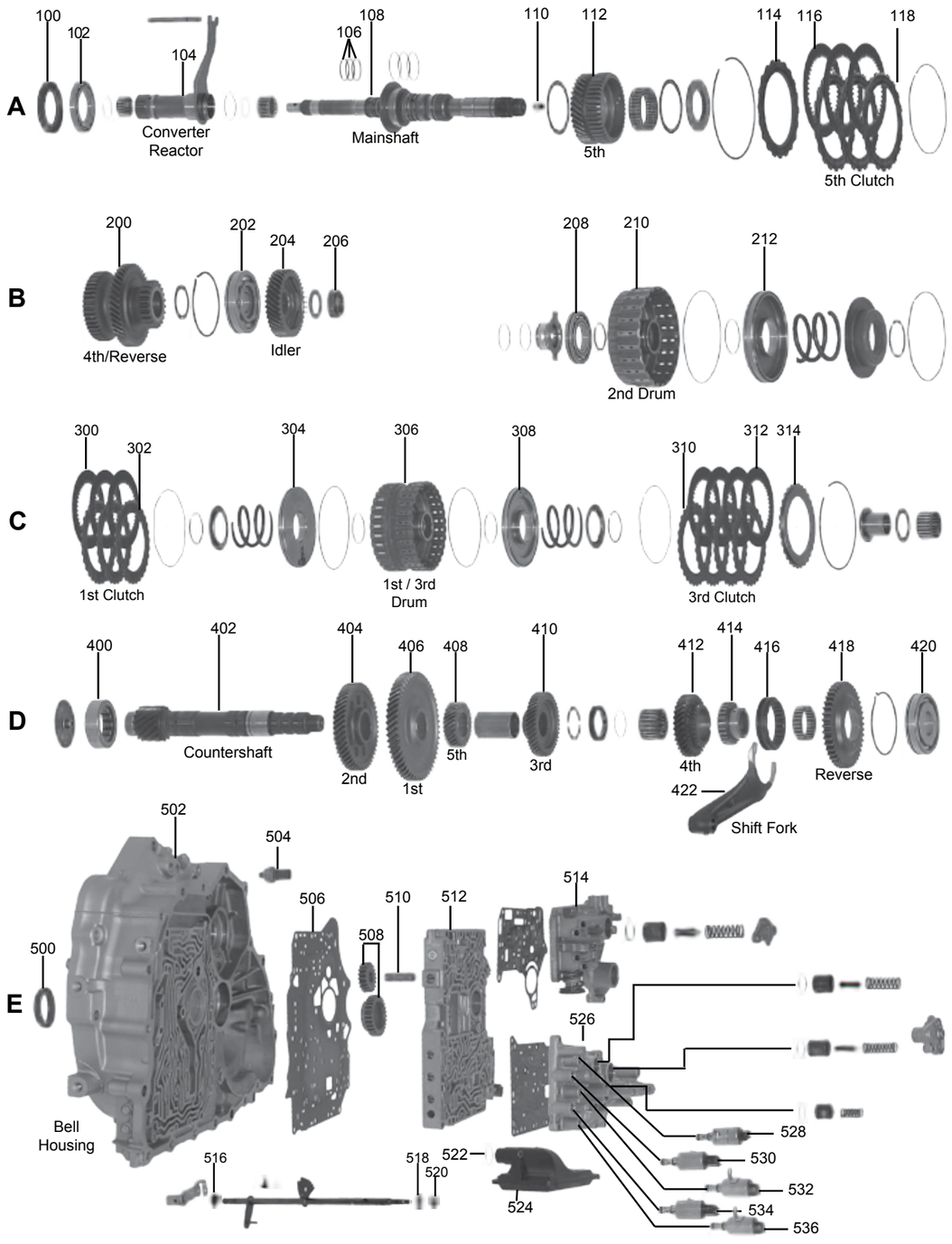
A
100
102
104
Converter Reactor
106
108
Mainshaft
110
112
5th
114
116
118
5th Clutch
B
200
4th/Reverse
202
204
Idler
206
208
210
2nd Drum
212
C
300
302
1st Clutch
304
306
1st / 3rd Drum
308
310
312
314
3rd Clutch
D
400
402
Countershaft
404
2nd
406
1st
408
5th
410
3rd
412
414
4th
416
418
Reverse
420
422
Shift Fork
E
500
502
504
Bell Housing
506
508
510
512
514
516
518
520
522
524
526
528
530
532
534
536

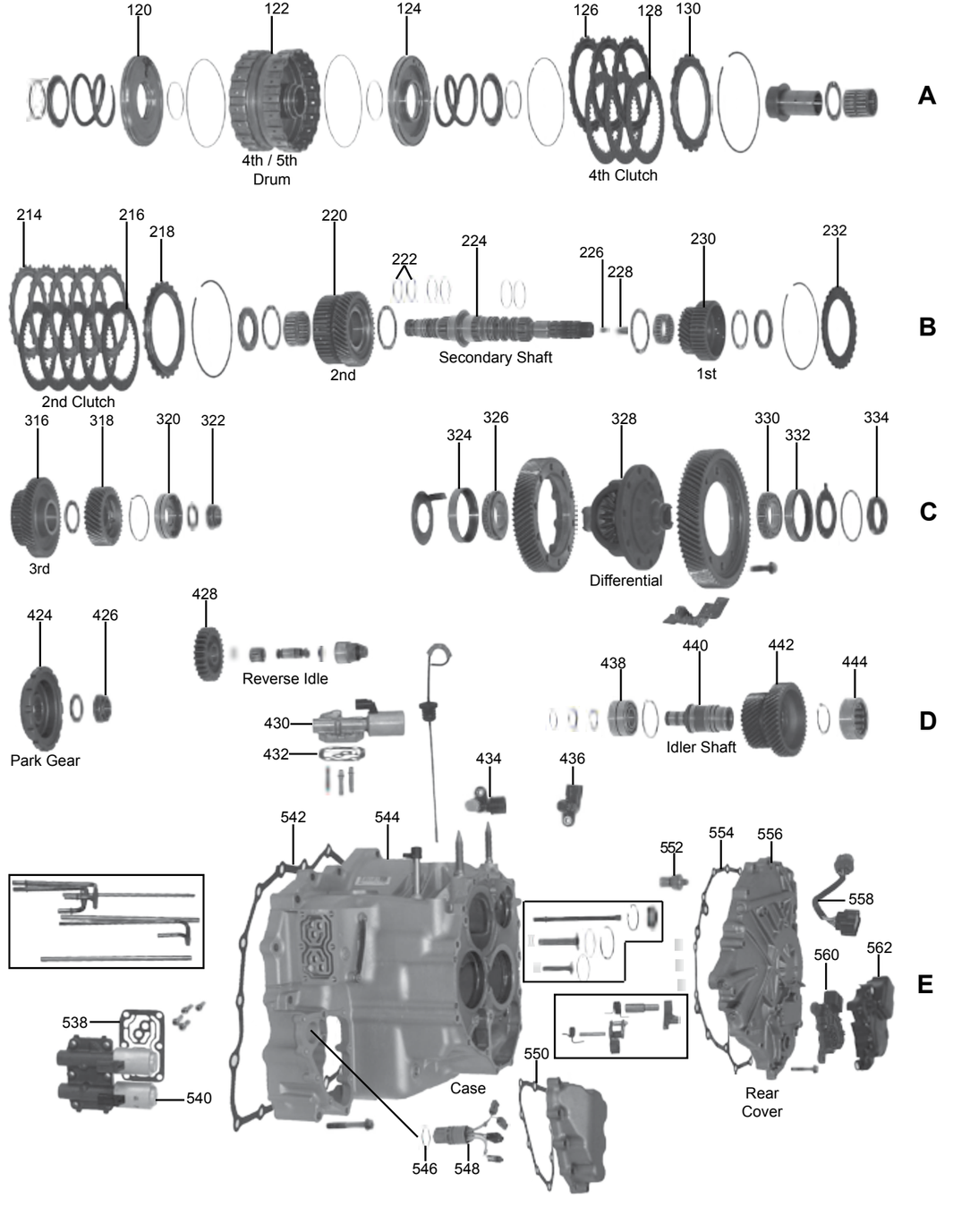
A
120
122
4th / 5th Drum
124
126
128
130
4th Clutch
B
214
216
218
2nd Clutch
220
2nd
222
224
Secondary Shaft
226
228
230
1st
232
C
316
318
3rd
320
322
324
326
328
Differential
330
332
334
D
424
426
Park Gear
428
Reverse Idle
430
432
434
436
438
440
Idler Shaft
442
444
E
538
540
542
544
Case
546
548
550
552
554
556
Rear Cover
558
560
562

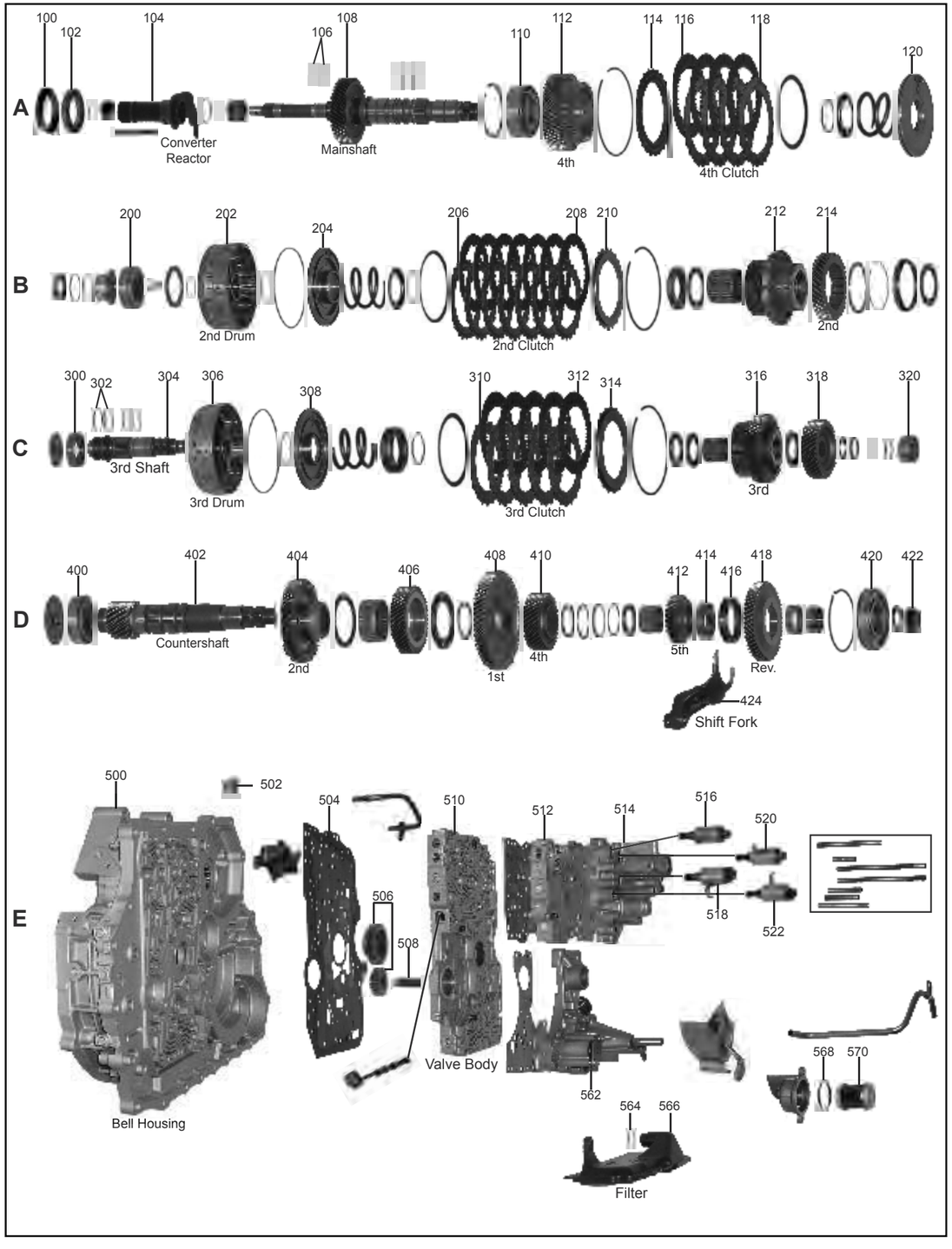
A
100
102
104
106
108
110
112
114
116
118
120
Converter Reactor
Mainshaft
4th
4th Clutch
B
200
202
204
206
208
210
212
214
2nd Drum
2nd Clutch
2nd
C
300
302
304
306
308
310
312
314
316
318
320
3rd Shaft
3rd Drum
3rd Clutch
3rd
D
400
402
404
406
408
410
412
414
416
418
420
422
Countershaft
2nd
1st
4th
5th
Rev.
424
Shift Fork
E
500
502
504
506
508
510
512
514
516
518
520
522
Bell Housing
Valve Body
562
564
566
568
570
Filter

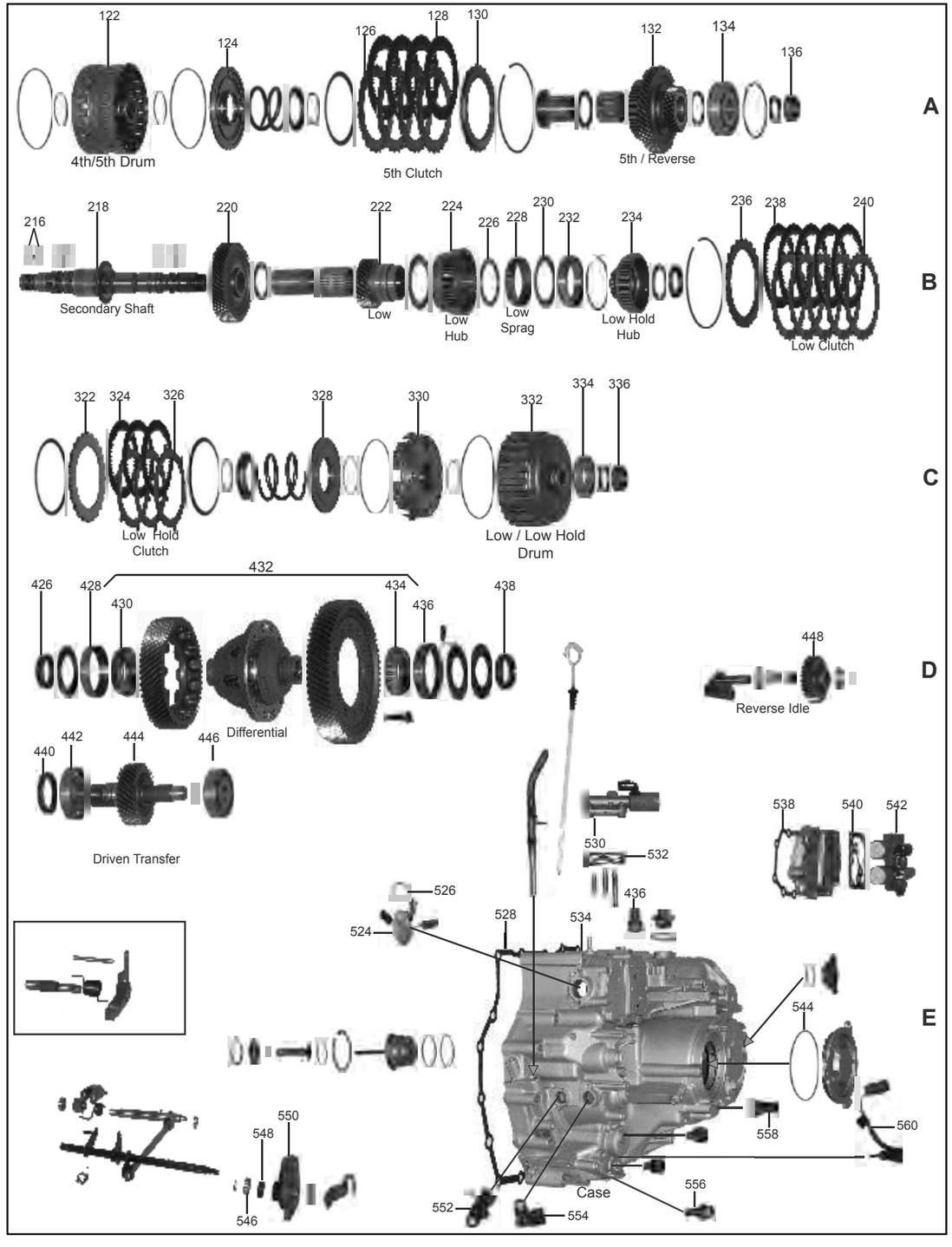
A
122
124
126
128
130
132
134
136
4th/5th Drum
5th Clutch
5th / Reverse
B
216
218
220
222
224
226
228
230
232
234
236
238
240
Secondary Shaft
Low
Low Hub
Low Sprag
Low Hold Hub
Low Clutch
C
322
324
326
328
330
332
334
336
Low Hold Clutch
Low / Low Hold Drum
D
426
428
430
432
434
436
438
440
442
444
446
448
Differential
Reverse Idle
Driven Transfer
E
524
526
528
530
532
534
538
540
542
544
546
548
550
552
554
556
558
560
Case

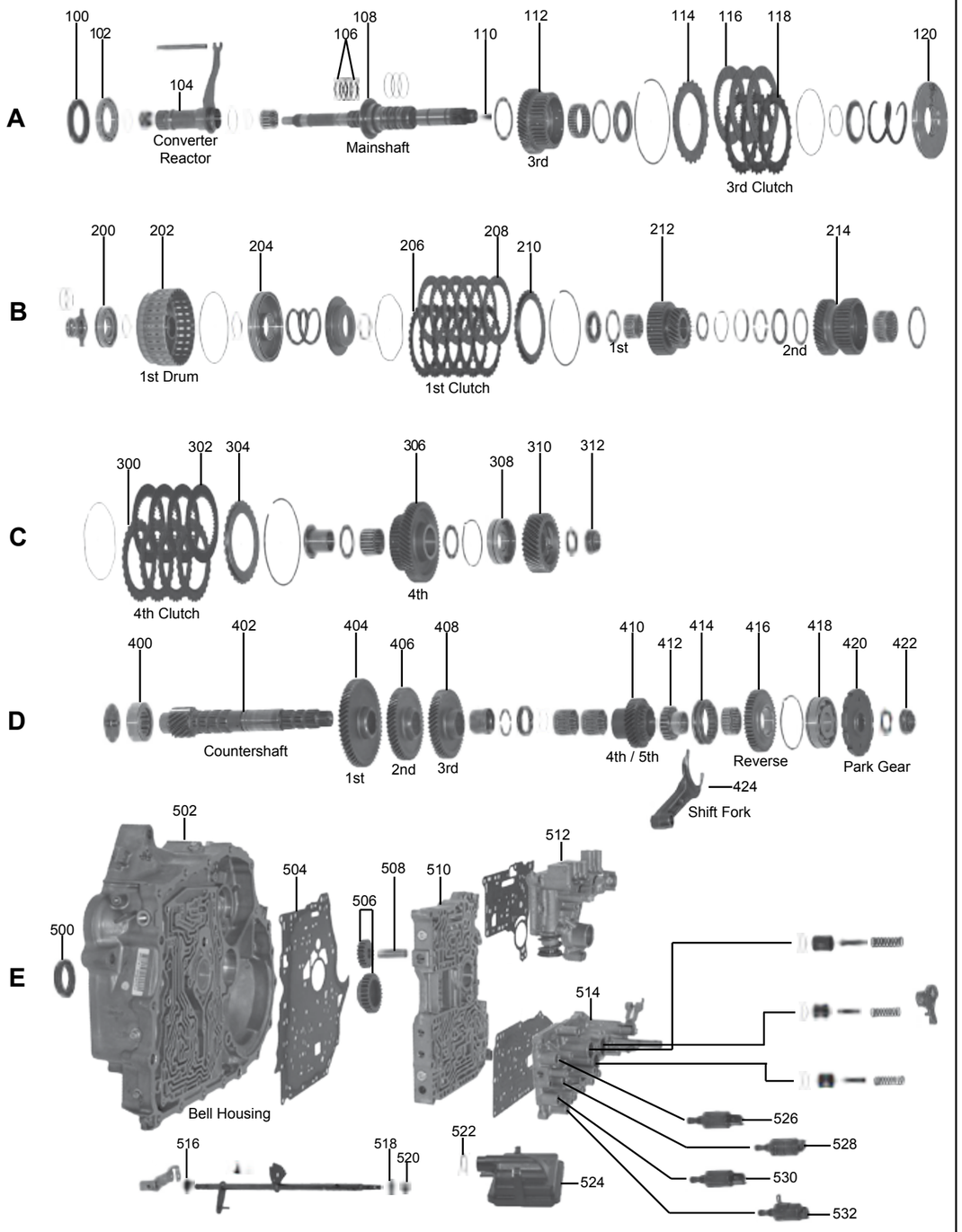
A
100
102
104
Converter
Reactor
106
108
Mainshaft
110
112
3rd
114
116
118
3rd Clutch
120
B
200
202
1st Drum
204
206
208
1st Clutch
210
212
1st
214
2nd
C
300
302
304
4th Clutch
306
4th
308
310
312
D
400
402
Countershaft
404
1st
406
2nd
408
3rd
410
4th / 5th
412
414
Reverse
416
418
Park Gear
420
422
424
Shift Fork
E
500
502
Bell Housing
504
506
508
510
512
514
516
518
520
522
524
526
528
530
532

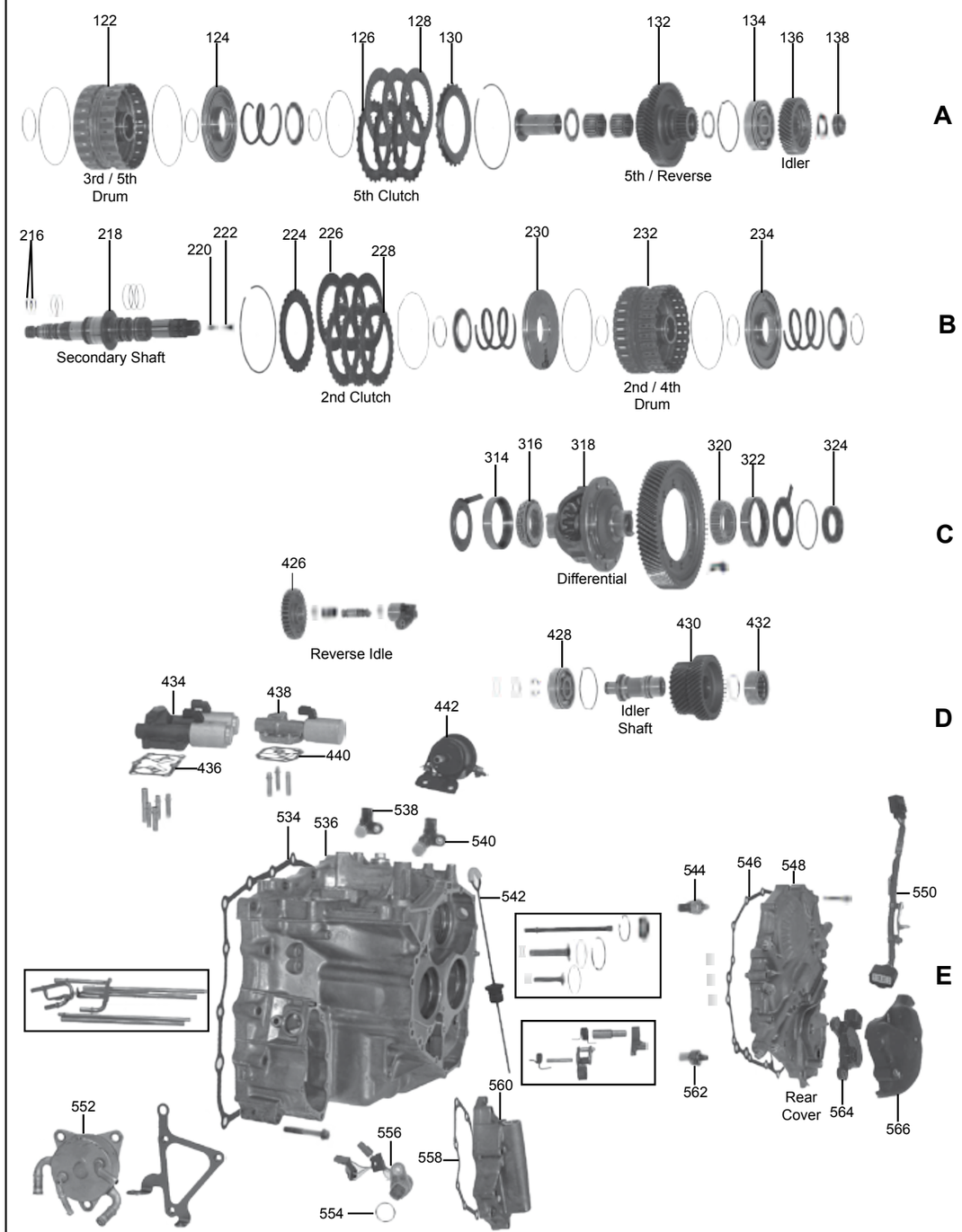
A
122
124
126
128
130
3rd / 5th
Drum
5th Clutch
132
134
136
138
5th / Reverse
Idler
B
216
218
Secondary Shaft
220
222
224
226
228
2nd Clutch
230
232
2nd / 4th
Drum
234
C
314
316
318
Differential
320
322
324
426
Reverse Idle
428
430
Idler
Shaft
432
D
434
436
438
440
442
E
534
536
538
540
542
544
546
548
550
552
554
556
558
560
562
Rear
Cover
564
566

HONDA 5 Speed
Quick Reference Guide

Model	Years	Trans	ILL Type	With Steels	Less Steels	Overhaul	Friction Module	Steel Module	Filter	Cooler Rtrn. Filter	Front Seal	Left Seal	Right Seal
ACURA													
3.2 CL	01-03	BGFA, MGFA	12	20006B	20004B	20002B	20119B	20139B	20010B	20013E	90070N	80077A	20076C
3.2 TL	00-03	B7WA, M7WA	12	20006B	20004B	20002B	20119B	20139B	20010B	20013E	90070N	80077A	20076C
MDX	01-02	BGHA, MGHA	12	20006E	20004E	20002E	20119E	20139E	20010E	20013E	90070N	80077A	20076C
MDX	03-06	BDKA, MDKA	14	40006A	40004A	40002A	40119A	40139A	40010A	140013A	70070BA	80077A	20076C
MDX	07-09	BYFA	14	40006D	40004D	40002D	40119D	40139D	40010D	140013A	70070BA	80077A	20076C
RDX (AWD)	07-13	BWEA	14	20006V	20004V	20002V	20119V	20139V	40010H	140013A	70070BA	80077A	20076C
RL	05-08	MJBA	14	TBD	TBD	20002V	TBD	TBD	40010G	140013A	70070BA	80077A	20076C
RL	09-10	MJBA	14	TBD	TBD	20002V	TBD	TBD	40010G	140013A	70070BA	80077A	20076C
RSX	02-06	MRMA	13	90006N	90004N	90002N	90119N	90139N	160010A	N/A	90070N	80077A	90076N
TL	04-06	BDGA	12	20006BA	20004BA	20002B	20119BA	20139BA	20010B	140013A	90070N	80077A	20076C
TL	07-08	BDGA	14	40006B	40004B	40002B	40119B	40139B	40010B	140013A	70070BA	80077A	20076C
TL (Type S)	07-08	BDHA	14	40006B	40004B	40002B	40119B	40139B	40010B	140013A	70070BA	80077A	20076C
TL	09-14	BK3A	14	40006BA	40004BA	40002B	40119BA	40139BA	40010B	140013A	70070BA	80077A	20076C
TL SH-AWD	09-14	BK4A	14	40006DB	40004DB	40002D	40119DB	40139DB	TBD	140013A	70070BA	80077A	20076C
TSX	04-08	MCTA	13	90006NB	90004NB	90002N	90119NB	90139NB	160010A	N/A	90070N	80077A	90076N
TSX (4 CYL)	09-14	MM7A	13	160006E	160004E	160002E	160119E	160139E	TBD	N/A	90070N	80077A	90076N
TSX (V6)	10-13	MM2A	14	40006BA	40004BA	40002B	40119BA	40139BA	40010B	140013A	70070BA	80077A	20076C
HONDA													
Accord (4 CYL)	03-04	BCLA, MCLA	13	160006A	160004A	90002N	160119A	160139A	160010A	N/A	90070N	80077A	90076NA
Accord (4 CYL)	05-06	BCLA, MCLA	13	160006AA	160004A	90002N	160119A	160139AA	160010A	N/A	90070N	80077A	90076NA
Accord (4 CYL)	07-Up	BCLA, MCLA	13	90006N	90004N	90002N	90119N	90139N	160010A	N/A	90070N	80077A	90076NA
Accord (4 CYL)	08-12	B90A, M91A	13	160006E	160004E	160002E	160119E	160139E	TBD	N/A	90070N	80077A	90076N
Accord (V6)	03-04	BAYA, MAYA	12	20006B	20004B	20002B	20119B	20139B	20010B	20013E	90070N	80077A	20076C
Accord (V6)	05-07	BAYA, MAYA	12	20006BA	20004BA	20002B	20119BA	20139BA	20010B	20013E	90070N	80077A	20076C
Accord (V6)	08-12	B97A	14	40006BA	40004BA	40002B	40119BA	40139BA	40010B	140013A	70070BA	80077A	20076C
Accord Hybrid	05-07	MURA	14	40006G	40004G	40002G	40119G	40139G	TBD	TBD	70070BA	80077A	20076C
Civic (DX/EX/LX/GX)	06-10	SPCA, MPCA	15	180006A	180004A	180002A	180119A	180139A	180010A	N/A	90070N	90077C	90076N
CR-V (FWD)	05-06	GPLA, MKYA	13	160006AA	160004A	90002N	160119A	160139AA	160010A	N/A	90070N	80077A	90076N
CR-V (AWD)	05-06	GPPA, MKZA	13	160006AA	160004A	90002N	160119A	160139AA	160010A	N/A	90070N	80077A	90076N
CR-V (FWD)	07-10	BZJA, MZJA	13	90006ND	90004ND	90002N	90119ND	90139ND	TBD	N/A	90070N	80077A	90076N
CR-V (AWD)	07-10	BZHA, MZHA	13	90006ND	90004ND	90002N	90119ND	90139ND	TBD	N/A	90070N	80077A	90076N
Element (FWD)	07-11	BZKA, MNZA	13	90006NA	90004NA	90002N	90119NA	90139NA	TBD	N/A	90070N	80077A	90076N
Element (AWD)	07-11	BZNA, MZKA	13	90006NA	90004NA	90002N	90119NA	90139NA	TBD	N/A	90070N	80077A	90076N
Fit	07-08	SMMA	15	180006A	180004A	180002A	180119A	180139A	180010A	N/A	90070N	90077C	90076N
Fit	09-10	SP5A, MP5A	15	180006A	180004A	180002A	180119A	180139A	180010A	N/A	90070N	90077C	90076N
Odyssey	02-04	BYBA	12	20006E	20004E	20002P	20119BA	20139BA	20010B	20013E	90070N	80077A	20076C
Odyssey	05-06	BGRA, PGRA	12	20006PA	20004P	20002P	20119PA	20139P	20010E	20013EA	90070N	80077A	20076C
Odyssey	07-12	P36A, B36A	14	40006BA	40004BA	40002B	40119BA	40139BA	40010B	140013A	70070BA	80077A	20076C
Pilot (AWD)	03-04	BVGA, PVGA	12	20006P	20004P	20002P	20119BA	20139BA	20010E	20013E	90070N	80077A	20076C
Pilot (AWD)	05-06	BVGA, PVGA	12	20006PA	20004P	20002P	20119BA	20139BA	20010E	20013EB	90070N	80077A	20076C
Pilot (AWD)	07-Up	BVGA, PVGA	12	20006PA	20004P	20002P	20119PA	20139P	20010E	140013A	90070N	80077A	20076C
Pilot (FWD)	03-07	BVLA, PVLA	14	20006VA	20004VA	20002V	20119VA	20119VA	TBD	140013A	90070N	80077A	20076C
Pilot (AWD)	08-Up	P34A	14	TBD	TBD	20002V	TBD	TBD	TBD	140013A	90070N	80077A	20076C
Pilot (FWD)	08-Up	P35A	14	TBD	TBD	20002V	TBD	TBD	TBD	140013A	90070N	80077A	20076C
Pilot (AWD)	09-12	PN3A	14	40006DA	40004DA	40002D	40119DA	40139DA	TBD	140013A	70070BA	80077A	20076C
Pilot (FWD)	09-12	PN4A	14	40006BA	40004BA	40002B	40119BA	40139BA	40010B	140013A	70070BA	80077A	20076C
Ridgeline	06-08	BJFA, MJFA	14	20006VB	20004VB	20002V	20119VB	20139VB	40010A	140013A	70070BA	80077A	20076C
Ridgeline	09-12	PSFA	14	40006DC	40004DC	40002D	40119DC	40139DC	TBD	140013A	70070BA	80077A	20076C
Saturn Vue	04-07	MDPA	14	40006A	40004A	40002A	40119A	40139A	40010C	140013A	70070BA	80077A	20076C
Saturn Vue	04-07	MDRA	14	40006A	40004A	40002A	40119A	40139A	40010A	140013A	70070BA	80077A	20076C

ILL.		Qty.	Year	Part #	Ref. #
MASTER OVERHAUL KITS (WITH STEELS)					
N.I.	See Honda 5 Speed Guide	AR			
MASTER OVERHAUL KITS (LESS STEELS)					
N.I.	See Honda 5 Speed Guide	AR			
OVERHAUL KITS (WITH RINGS AND SEALS)					
N.I.	See Honda 5 Speed Guide	AR			
SUB KITS (TRANSFER CASE)					
N.I.	BGHA, BDKA, MGHA, MDKA	1	01-Up	30001	N.L.
N.I.	MJBA	1	05-Up	30001	N.L.
BONDED PISTONS					
N.I.	Retainer Piston (Bonded) 3.570 X .710	1	00-Up	30967	22533-RPC-003
N.I.	Retainer Piston (Bonded) 3.940 X 1.050	1	00-Up	80962	22533-PAX-003
N.I.	Retainer Piston (Bonded) 3.940 X 1.360	1	00-Up	80962B	22533 P7X 023
N.I.	Retainer Piston (Bonded) 4.090 X 1.050	1	00-Up	30967B	22533-P7V-J010
N.I.	Retainer Piston (Bonded) 4.090 X 1.360	1	00-Up	80962A	22533-P7V-9010
N.I.	Retainer Piston (Bonded) 4.200 X .880	1	00-Up	30962	22533-PRP-003
N.I.	Retainer Piston (Bonded) 4.260 X .880	1	00-Up	30967A	22533-RCL-A01
GASKETS & O-RINGS					
N.I.	O-Ring, Converter Hub (32.0mm ID)	1	00-Up	60381D	N.L.
N.I.	O-Ring, Converter Hub (35.5mm ID)	1	00-Up	30381	N.L.
METAL CLAD SEALS					
N.I.	See Honda 5 Speed Guide	AR			N.L.
FRICTION PLATES					
N.I.	Friction Modules - See Honda 5 Speed Guide	AR			N.L.
STEEL PLATES					
N.I.	Steel Modules - See Honda 5 Speed Guide	AR			N.L.
FILTERS					
N.I.	See Honda 5 Speed Guide	AR			N.L.
N.I.	Screen, Valve Body (Some) (.670" x .325")	AR	02-Up	80015	27750-PL5-J01
DIFFERENTIAL BEARINGS					
N.I.	Differential Bearing & Race (B7WA Bell)	1	01-03	80289JK	91121-P7T-305
N.I.	Differential Bearing & Race (B7WA Case)	1	01-03	80289FK	91124-PGH-305
N.I.	Differential Bearing & Race (BAYA Bell)	1	03-07	80289HK	91121-PYB-003
N.I.	Differential Bearing & Race (BAYA Case)	1	03-07	80289LK	91122-PYB-003
N.I.	Differential Bearing & Race (BCLA Bell)	1	03-07	80289AK	91121-P6H-013
N.I.	Differential Bearing & Race (BCLA Case)	1	03-04	80289GK	91122-PRP-003
N.I.	Differential Bearing & Race (BCLA Case)	1	05-07	80289NK	91122-RFK-013
N.I.	Differential Bearing & Race (BDGA Bell)	1	04-06	80289HK	91121-PYB-003
N.I.	Differential Bearing & Race (BDGA Case)	1	04-05	80289LK	91122-PYB-003
N.I.	Differential Bearing & Race (BDGA Case)	1	2006	80289MK	91122-RDK-003
N.I.	Differential Bearing & Race (BGFA Bell)	1	01-03	80289JK	91121-P7T-305
N.I.	Differential Bearing & Race (BGFA Case)	1	01-03	80289FK	91124-PGH-305
N.I.	Differential Bearing & Race (BGHA Bell)	1	01-02	80289JK	91121-P7T-305
N.I.	Differential Bearing & Race (BGHA Case)	1	01-02	80289FK	91124-PGH-305
N.I.	Differential Bearing & Race (BYBA Bell)	1	2002	80289JK	91121-P7T-305
N.I.	Differential Bearing & Race (BYBA Bell)	1	03-04	80289HK	91121-PYB-003
N.I.	Differential Bearing & Race (BYBA Case)	1	2002	80289FK	91124-PGH-305
N.I.	Differential Bearing & Race (BYBA Case)	1	03-04	80289LK	91122-PYB-003
N.I.	Differential Bearing & Race (M7WA Bell)	1	2000	80289JK	91121-P7T-305
N.I.	Differential Bearing & Race (M7WA Case)	1	2000	80289FK	91124-PGH-305
N.I.	Differential Bearing & Race (MCLA Case)	1	03-04	80289AK	91121-P6H-013
N.I.	Differential Bearing & Race (MCLA Case)	1	05-06	80289PK	91121-RFK-013
N.I.	Differential Bearing & Race (MRMA Bell)	1	02-06	80289AK	91121-P6H-013
N.I.	Differential Bearing & Race (MRMA Case)	1	02-06	80289K	91122-P6H-013

HONDA 5 Speed

FWD
5 SPEED

ILL.		Qty.	Year	Part #	Ref. #
VALVE BODY RECALIBRATION KITS					
N.I.	Valve Body Kit, 4 Cyl. (CPC Valve BCLA)	1	03-Up	30165	N.L.
N.I.	Valve Body Kit, 6 Cyl. (CPC Valve MDKA)	1	03-Up	30165A	N.L.
N.I.	Valve Body Kit, 6 Cyl. (CPC Valve .388 Various)	1	00-Up	30165B	N.L.
N.I.	Lube Kit, Odyssey, Acura 3.2TL (Transgo)	1	00-04	T80168	N.L.
MISCELLANEOUS COMPONENTS					
N.I.	Cooler / Warmer (Universal External Cooler Adapter) (Replaces OE)	1	00-Up	30998U	N.L.
N.I.	Cooler / Warmer (Accord V6 03-06, TL 04-06)	1	03-06	30998	N.L.
N.I.	Cooler / Warmer (Civic 06-Up)	1	06-Up	30998A	N.L.
N.I.	Cooler / Warmer (3.2CL 01-03, 3.2TL 00-03)	1	00-03	30998B	N.L.
N.I.	End Plug, Valve Body (12mm)	1	00-Up	80741-6	N.L.
N.I.	End Plug, Valve Body (14mm)	1	00-Up	80741-6A	N.L.
N.I.	End Plug, Valve Body (15mm)	1	00-Up	80741-6B	N.L.
N.I.	End Plug Kit, Valve Body (Incl 12mm, 14mm, 15mm End Plugs)	1	00-Up	80741-6K	N.L.

Notes

FWD
6 SPEED

HONDA 6 Speed

ILL.		Qty.	Year	Part #	Ref. #
MASTER OVERHAUL KITS (WITH STEELS)					
N.I.	MDX (MT4A), ZDX (M7PA), RL (ARPA)	1	2010-Up	290006A	N.L.
N.I.	Odyssey (MV2A)	1	2011-Up	290006B	N.L.
N.I.	Accord	1	2013-Up	290006C	N.L.
MASTER OVERHAUL KITS (LESS STEELS)					
N.I.	MDX (MT4A), ZDX (M7PA), RL (ARPA)	1	2010-Up	290004A	N.L.
N.I.	Odyssey (MV2A)	1	2011-Up	290004B	N.L.
N.I.	Accord	1	2013-Up	290004C	N.L.
OVERHAUL KITS (WITH RINGS AND SEALS)					
N.I.	MDX (MT4A), ZDX (M7PA), RL (ARPA)	1	2010-Up	290002A	N.L.
N.I.	Odyssey (MV2A), Accord	1	2011-Up	290002B	N.L.
GASKETS & O-RINGS					
N.I.	Bell housing / Case MDX (MT4A), ZDX (M7PA), RL (ARPA)	1	2010-Up	290325A	N.L.
N.I.	Bell Housing / Case Odyssey (MV2A), Accord	1	2011-Up	290325B	N.L.
METAL CLAD SEALS					
N.I.	Converter Hub (All)	1	2010-Up	290070A	N.L.
N.I.	Axle, Bell Housing (All)	1	2010-Up	290077A	N.L.
N.I.	Axle, Case (All)	1	2010-Up	290076A	N.L.
N.I.	Case / Transfer (MDX)	1	2010-Up	290078A	N.L.
N.I.	Input Transfer Case (MDX)	1	2010-Up	290079A	N.L.
N.I.	Output Transfer Case (MDX)	1	2010-Up	290079B	N.L.
FRICTION PLATES					
N.I.	Module Kit (MDX (MT4A), ZDX (M7PA), RL (ARPA), Odyssey (MV2A)	1	2010-Up	290119A	N.L.
N.I.	Module Kit (Accord)	1	2013-Up	290119B	N.L.
STEEL PLATES					
N.I.	Module kit (MDX (MT4A), ZDX (M7PA), RL (ARPA), Odyssey (MV2A)	1	2010-Up	290139A	N.L.
N.I.	Module Kit (Accord)	1	2013-Up	290139B	N.L.
FILTERS					
N.I.	MDX (MT4A), ZDX (M7PA), RL (ARPA)	1	2010-Up	290010A	N.L.
N.I.	Odyssey (MV2A), Accord	1	2011-Up	290010B	N.L.

Notes

ILL.		Qty.	Year	Part #	Ref. #
MASTER OVERHAUL KITS (WITH STEELS)					
N.I.	M4VA, MLYA, SLYA (Civic HX, GX)	1	96-05	140006A	N.L.
N.I.	MHTA (Insight)	1	01-06	140006B	N.L.
N.I.	SZCA (Civic Hybrid)	1	03-05	140006C	N.L.
MASTER OVERHAUL KITS (LESS STEELS)					
N.I.	M4VA, MLYA, SLYA (Civic HX, GX)	1	96-05	140004A	N.L.
N.I.	MHTA (Insight)	1	01-06	140004B	N.L.
N.I.	SZCA (Civic Hybrid)	1	03-05	140004C	N.L.
OVERHAUL KITS (WITH RINGS AND SEALS)					
N.I.	M4VA, MLYA, SLYA (Civic HX, GX)	1	96-05	140002A	N.L.
N.I.	MHTA (Insight)	1	01-06	140002B	N.L.
N.I.	SZCA (Civic Hybrid)	1	03-05	140002C	N.L.
N.I.	SLYA (Jazz 02-08, City 03-05)	1	02-08	140002D	N.L.
GASKETS & O-RINGS					
N.I.	Pan Gasket (M4VA, MLYA, SLYA) (Civic HX, GX)	1	96-05	140300A	N.L.
N.I.	Pan Gasket (MHTA) (Insight)	1	01-06	140300B	N.L.
N.I.	Pan Gasket, Civic Hybrid (MHTA)	1	03-05	140300C	N.L.
FRICTION MODULES					
N.I.	M4VA, MLYA, SLYA (Civic HX, GX)	1	96-05	140119A	N.L.
N.I.	MHTA (Insight)	1	01-06	140119A	N.L.
N.I.	SZCA (Civic Hybrid)	1	03-05	140119A	N.L.
STEEL MODULES					
N.I.	M4VA, MLYA, SLYA (Civic HX, GX)	1	96-05	140139A	N.L.
N.I.	MHTA (Insight)	1	01-06	140139A	N.L.
N.I.	SZCA (Civic Hybrid)	1	03-05	140139A	N.L.
FILTERS					
N.I.	Main, M4VA (Civic HX) (Metal Filter)	1	96-00	140010A	25420-P4V-003
N.I.	Main, MLYA, SLYA (Civic HX, GX) (Plastic Filter)	1	01-05	140010AA	25420-PLY-003
N.I.	Main, MHTA (Insight), SZCA (Civic Hybrid)	1	01-06	140010B	25420-PHT-003
N.I.	Main, CVT Jazz	1	02-08	140010D	25420-PWR-003
N.I.	Filter, Cooler Return (Civic 96-00, Insight 01-06) (M4VA, MHTA)	1	96-06	140013A	25450-P4V-013
N.I.	Filter, Cooler Return (Jazz)	1	02-08	140013D	25450-PWR-003

Notes

Notes

Vehicle		Qty.	Year	Part #	Ref. #
ACURA					
2.2CL	Lock-Up	1	1997	80425	28300-PX4-014
2.2CL	Shift	1	1997	80420	28200-PX4-003
2.3CL	Linear (Dual)	1	98-99	80428	28250-P6H-024
2.3CL	Lock-Up	1	98-99	80425	28300-PX4-014
2.3CL	Shift “B” w/ Black Connector	1	98-99	80430A	28400-P6H-013
2.3CL	Shift “C” w/ Brown Connector	1	98-99	80430B	28500-P6H-013
3.0CL	Linear (Dual)	1	98-99	80428	28250-P6H-024
3.0CL	Lock-Up	1	1997	80420B	28200-P0Z-003
3.0CL	Lock-Up	1	98-99	80420B	28200-P0Z-003
3.0CL	Shift	1	1997	80420B	28200-P0Z-003
3.0CL	Shift “B” w/ Black Connector	1	98-99	80430A	28400-P6H-013
3.2CL	Linear (Dual)	1	01-03	80428	28250-P6H-024
3.2CL	Linear (Single)	1	01-03	90428E	28250-P7W-003
3.2CL	Shift “B” w/ Black Connector	1	01-03	80430A	28400-P6H-013
3.2CL	Shift “C” w/ Brown Connector	1	01-03	80430B	28500-P6H-013
3.2TL	Linear (Dual)	1	1999	80428	28250-P6H-024
3.2TL	Linear (Dual)	1	00-03	80428	28250-P6H-024
3.2TL	Linear (Single)	1	00-03	90428E	28250-P7W-003
3.2TL	Lock-Up	1	96-98	70425B	28300-PY4-034
3.2TL	Lock-Up	1	1999	80420B	28200-P0Z-003
3.2TL	Shift	1	96-98	70420B	28200-PY4-004
3.2TL	Shift “B” w/ Black Connector	1	1999	80430A	28400-P6H-013
3.2TL	Shift “B” w/ Black Connector	2	00-03	80430A	28400-P6H-013
3.2TL	Shift “C” w/ Brown Connector	1	1999	80430B	28500-P6H-013
3.2TL	Shift “C” w/ Brown Connector	2	00-03	80430B	28500-P6H-013
3.5RL	Lock-Up	1	96-04	70425B	28300-PY4-034
3.5RL	Shift	1	96-04	70420B	28200-PY4-004
Integra	Linear (Single)	1	00-01	90428A	28250-P4R-315
Integra	Lock-Up	1	88-89	60420L	28200-PL4-681
Integra	Lock-Up	1	90-93	70425A	28300-PR0-010
Integra	Lock-Up	1	94-01	90425A	28300-P24-J01
Integra	Shift	1	90-93	70420A	28200-PR0-010
Integra	Shift	1	94-01	70420	28200-P56-003
Legend	Lock-Up	1	87-90	60425H	28300-PL5-033
Legend	Lock-Up	1	91-95	70425B	28300-PY4-034
Legend	Shift	1	87-90	60420HA	28200-PL5-033
Legend	Shift	1	91-95	70420B	28200-PY4-004
MDX	Linear (Dual)	1	01-02	80428	28250-P6H-024
MDX	Linear (Dual)	1	03-06	30428C	28250-RDK-004
MDX	Linear (Single)	1	01-02	90428E	28250-P7W-003
MDX	Linear (Single)	1	03-06	30428D	28260-RDK-023
MDX	Shift “A” w/ Brown Connector	2	01-02	80430B	28500-P6H-013
MDX	Shift “A” w/ Brown Connector	2	03-06	30430C	28400-RDK-003
MDX	Shift “B” w/ Black Connector	2	01-02	80430A	28400-P6H-013
MDX	Shift “B” w/ Black Connector	2	03-06	30430D	28500-RDK-003
RDX	Linear (Single)	1	07-08	30428D	28260-RDK-023
RSX	Linear (Dual)	1	02-04	90428C	28260-PRP-014
RSX	Linear (Single)	1	02-06	90428B	28250-PRP-013
RSX	Shift “A” w/ Brown Connector	3	02-04	90430A	28400-PRP-004
RSX	Shift “B” w/ Black Connector	2	02-04	90430B	28500-PRP-004
TSX	Linear (Dual)	1	04-08	90428C	28260-PRP-014
TSX	Linear (Single)	1	04-08	90428B	28250-PRP-013
TSX	Shift “A” w/ Brown Connector	3	04-08	90430C	28400-RCT-003
TSX	Shift “B” w/ Black Connector	2	04-08	90430D	28500-RCT-003
Vigor	Pressure	1	92-98	70428	28250-PYZ-003
Vigor	Lock-Up	1	92-98	70425C	28300-P1V-004
Vigor	Shift	1	92-98	70420C	28200-PW4-043

Vehicle		Qty.	Year	Part #	Ref. #
HONDA					
Accord (4 Cyl.)	Linear (Dual)	1	98-02	80428	28250-P6H-024
Accord (4 Cyl.)	Linear (Dual)	1	03-04	90428C	28260-PRP-014
Accord (4 Cyl.)	Linear (Single)	1	03-04	90428B	28250-RPC-003
Accord (4 Cyl.)	Lock-Up	1	90-97	80425	28300-PX4-014
Accord (4 Cyl.)	Lock-Up	1	98-02	80425	28300-PX4-014
Accord (4 Cyl.)	Shift	1	90-97	80420	28200-PX4-003
Accord (4 Cyl.)	Shift “B” w/ Black Connector	1	98-02	80430A	28400-P6H-013
Accord (4 Cyl.)	Shift “C” w/ Brown Connector	1	98-02	80430B	28500-P6H-013
Accord (4 Cyl.)	Shift “A” w/ Brown Connector	3	03-04	90430A	28400-PRP-004
Accord (4 Cyl.)	Shift “B” w/ Black Connector	2	03-04	90430B	28500-PRP-004
Accord (V6)	Linear (Dual)	1	98-02	80428	28250-P6H-024
Accord (V6)	Linear (Dual)	1	03-07	80428	28250-P6H-024
Accord (V6)	Linear (Single)	1	03-07	90428E	28250-P7W-003
Accord (V6)	Lock-Up	1	95-97	80420B	28200-P0Z-003
Accord (V6)	Lock-Up	1	98-02	80420B	28200-P0Z-003
Accord (V6)	Shift	1	95-97	80420B	28200-P0Z-003
Accord (V6)	Shift “B” w/ Black Connector	1	98-02	80430A	28400-P6H-013
Accord (V6)	Shift “B” w/ Black Connector	2	03-07	80430A	28400-P6H-013
Accord (V6)	Shift “C” w/ Brown Connector	1	98-02	80430B	28500-P6H-013
Accord (V6)	Shift “C” w/ Brown Connector	2	03-07	80430B	28500-P6H-013
Civic	Linear (Dual)	1	01-05	90428D	28250-PLX-305
Civic	Linear (Dual)	1	06-10	90428F	28260-RPC-004
Civic	Linear (Single)	1	06-10	90428B	28250-RPC-003
Civic	Lock-Up	1	88-91	60420L	28200-PL4-681
Civic	Lock-Up	1	92-00	90425A	28300-P24-J01
Civic	Lock-Up (Bell) w/ Black Connector	1	01-05	80430A	28400-P6H-013
Civic	Shift	1	96-00	90420A	28200-P4R-003
Civic	Shift (Single) w/ Black Connector	1	01-05	80430A	28400-P6H-013
Civic	Shift (Dual)	1	01-05	90420B	28200-PLX-003
Civic	Shift “A”	2	06-10	90420C	28400-RPC-003
Civic	Shift “B”	2	06-10	90420D	28500-RPC-003
CRV	Linear (Dual)	1	02-07	90428C	28260-PRP-014
CRV	Linear (Single)	1	97-01	90428A	28250-P4R-315
CRV	Linear (Single)	1	02-07	90428B	28250-PRP-013
CRV	Lock-Up	1	97-01	90425A	28300-P24-J01
CRV	Shift	1	97-01	90420A	28200-P4R-003
CRV	Shift “A” w/ Brown Connector	3	02-07	90430A	28400-PRP-004
CRV	Shift “B” w/ Black Connector	2	02-07	90430B	28500-PRP-004
Element	Linear (Dual)	1	03-06	90428C	28260-PRP-014
Element	Linear (Single)	1	03-06	90428B	28250-PRP-013
Element	Shift “A”	2	03-06	90430C	28400-RCT-003
Element	Shift “B”	2	03-06	90430D	28500-RCT-003
Fit	Linear (Single)	1	07-08	90428B	28250-PRP-013
Odyssey	Linear (Dual)	1	98-06	80428	28250-P6H-024
Odyssey	Linear (Single)	1	02-06	90428E	28250-P7W-003
Odyssey	Lock-Up	1	95-97	80425	28300-PX4-014
Odyssey	Lock-Up	1	1998	80425	28300-PX4-014
Odyssey	Lock-Up	1	99-01	80420B	28200-P0Z-003
Odyssey	Shift	1	95-97	80420	28200-PX4-003
Odyssey	Shift “B” w/ Black Connector	2	98-06	80430A	28400-P6H-013
Odyssey	Shift “C” w/ Brown Connector	2	98-06	80430B	28500-P6H-013
Pilot	Linear (Dual)	1	03-07	80428	28250-P6H-024
Pilot	Linear (Single)	1	03-07	90428E	28250-P7W-003
Pilot	Shift “B” w/ Black Connector	2	03-07	80430A	28400-P6H-013
Pilot	Shift “C” w/ Brown Connector	2	03-07	80430B	28500-P6H-013
Prelude	Linear (Dual)	1	97-01	80428	28250-P6H-024
Prelude	Lock-Up	1	1988	60420EA	28300-PK4-013
Prelude	Lock-Up	1	1989	60425E	28300-PK4-901
Prelude	Lock-Up	1	90-91	60425EA	28300-PY8-J10
Prelude	Lock-Up	1	92-01	80425	28300-PX4-014
Prelude	Shift	1	92-96	80420	28200-PX4-003
Prelude	Shift w/ Black Connector	1	97-01	80430A	28400-P6H-013
Prelude	Shift w/ Brown Connector	1	97-01	80430B	28500-P6H-013
Ridgeline	Linear (Dual)	1	06-08	30428C	28250-RDK-004
Ridgeline	Linear (Single)	1	06-08	30428D	28260-RDK-023
Ridgeline	Shift “A” w/ Brown Connector	2	06-08	30430C	28400-RDK-003
Ridgeline	Shift “B” w/ Black Connector	2	06-08	30430D	28500-RDK-003

SEAL AFTERMARKET PRODUCTS
your source for engineered solutions

DOMESTIC / IMPORT SOLENOIDS

Seal Aftermarket Products is proud to introduce new aftermarket & Original Equipment Solenoids. OE Products reference a 'D' prefix.
Please call your Sales Representative for pricing & availability.

CHRYSLER



D107958
62TE Input & Output Sensor 2007-Up [OEM]
OE # 5078554AA



D107955
62TE PressureTransducer 2007-Up [OEM]



D107946
62TE Sensor VLP Linear Position 2007-Up [OEM]



D107956
62TE PRNDL Switch 2007-Up [OEM]
OE # 68055955AA



D107957
62TE Transfer Shaft Speed 2007-Up [OEM]
OE # 5078930AA

FORD



D116941AB
6R60 Pressure Control (Black Connector) 2006-Up [OEM]



D116941AD
6R60 Pressure Control (Brown Connector) 2006-Up [OEM]



D116941
6R60 Pressure Control (White Connector) 2006-Up [OEM]

GM



D105991A
VT20/VT25E Park/Neutral Position Lever (4 Pin) 2002-Up [OEM]
OE # 24214519



D105954A
VT20/VT25E Input & Output Speed (7 Prong Connector) 2002-Up [OEM]
OE # 24229640



D115958A
V6T70/75 6F50/55 Output Speed Sensor (3 Prong Connector) & Wire Harness 2007-Up [OEM]



D115954A
6T70/75 6F50/55 Input Speed Sensor 2007-Up [OEM]
OE # 24262387



D37990A
Allison 1000/2000 Pressure Manifold 2006-Up (Will Retro to 2000 Switch)



D37959
Allison 1000/2000 Trim "B" (0.645in Snout) 2000-05 [OEM]
OE # 29533075

AISIN WARNER



59954L
AW50-40 AW60-40/42 TCC 1995-Up



59955
AW55-40/42LE AF20, 21 Shift A & B 1989-Up



K59927D
AW55-50/51 Linear Kits (3 Per) w/B & C Valve Bodies Only 2003-Up



D59958D
AW55-50SN Speed Sensor Input & Output 1999-Up [OEM]



59955M
AW60-40/42LE Shfift Solenoid 1995-Up

HONDA



D98956
B6VA BAXA MAXA M6HA MDWA MPZA Shift (Brown Connector) 2001-Up [OEM]
OE# 28500-P6H-013



D98992B
Honda 2nd & 3rd Sensor Clutch Pressure 38 PSI (Green) 4 Speed Odyssey 4 Cyl 1998 & 2002-Up [OEM]
OE # 28600-PRP-004



D98992D
Honda 2nd & 3rd Clutch Sensor Pressure 27 PSI (Beige) 5 Speed 2003-Up [OEM]



D98992F
Honda Sensor Oil Pressure (Civic 2003-10 & Fits 2007-08) [OEM]
OE # 28600-PRC-003



D98955
B6VA BAXA MAXA M6HA MDWA MPZA Shift (Black Connector) 2001-Up [OEM]
OE # 28400-P6H-013



D98957A
Honda Shift A (2001-12 Flat w/ Hook (Brown Connector) [OEM]



98911
Honda Speed Sensor MRMA MRVA MCVA BCLA MCLA (Connector Sideways) 2002-Up



D98992H
Honda Sensor Oil Pressure (Fit 2009-Up) [OEM]



D98992A
BAXA MAXA B7TA B7VA B7WA B7XA BAYA BYBA MFYA MGHA MGSA 2nd & 3rd Sensor Clutch Pressure 33 PSI (Black) 2003-Up [OEM]
OE # 28600-P7Z-003



121954A
Honda Input/Output Speed Sens (ISS) 2007-Up



121958C
Honda Output Speed Sensor (OSS) 2007-Up



121958D
Honda Vehicle Speed Sensor (VSS) & Input Speed 2008-Up

HYUNDAI

D41946C
A4CF1/2 EPC 2006-Up [OEM]
OE # 46313-23010



D41986C
A4CF1/2 Wire Harness, Internal 2006-Up [OEM]
OE # 46307-23010

D41988C
A4CF1/2 Wire Harness, Internal 2006-Up [OEM]
OE # 46308-23000

D41949F
A4CF1/2 Trans Control Solenoid (4 Speed) 2006 Up [OEM]
OE # 46313-23000

MERCEDES



68971
722.6 Connector ECM 1996-Up



D68957
722.6 TCC/ PWM 1996-Up [OEM]
OE # 52108314AB



68956
722.6 Shift 1-2 & 3-4 1996-Up

NISSAN



D123933A
RE5R05A EPC TCC Direct Clutch 2002-Up (RE0F09A TCC 2003-Up only) [OEM]



D123929B
RE5R05A Low Coast Brake (High Pressure 20-40Ω) 2002-Up [OEM]

D123929A
RE5R05A RE0F09A Low Coast Brake (Low Presssure 10-15Ω Infiniti until 8/1/05 - After 8/1/05, went to 20-40Ω D123929B) [OEM]

Release Date 10/21/2013

Sales Policy: All shipments are FCA Pembroke Park. Price and Availability subject to change
© 2013 Seal Aftermarket Products LLC. ALL RIGHTS RESERVED. Possession of price list does not constitute offer to sell
Disclaimer - All information has been checked for accuracy, however no liability can be assumed for errors and omissions

Seal Aftermarket Products LLC · 2315 SW 32nd Avenue · Pembroke Park FL 33023 · [P] (800) 582-2760 · [F] 954-364-2401 · www.sealaftermarketproducts.com

INNOVATION



your source for engineered solutions

Included in Seal Aftermarket Products import application rebuild kits are extra aftermarket fixes, enhanced component materials, as well as key Original Equipment Manufacturer gaskets and seals for example:

- Honda kits- include a full set of drain plugs, pressure tap washers, main shaft, secondary shaft, and counter shaft nuts.
- Jatco JF506E- include v-shaped sealing rings, metal pump gasket, and the drain plug.
- VW 09G- include molded pan gasket with torque limiters, 9 pressure sensor orings, front and rear planet washers.
- AL4/DPO- include enhanced plastic sealing rings and molded pistons.
- ZF6HP26- include OEM case gaskets, sealing rings, and metal clad seals



SEAL AFTERMARKET™
PRODUCTS

TOLEDO TRANS-KIT · Parker DISTRIBUTOR · BRYCO

Seal Aftermarket Products LLC
2315 S.W. 32 Ave., Pembroke Park, FL 33023
Phone 954-364-2400 • Toll Free 800-582-2760 • Fax 954-364-2401
www.sealaftermarketproducts.com

SEAL AFTERMARKET™
PRODUCTS

your source for engineered solutions

Aisin solenoid rebuild tool kit, SAP # 35199, works on large canister solenoids found in Aisin 5 speed and 6 speed transmissions. Includes: AW55-50, TF60 (09G, 09M, 09K), TR60 (09D), TF80 (AF40-6).



35199


#1 SAP Solenoid Tool Set

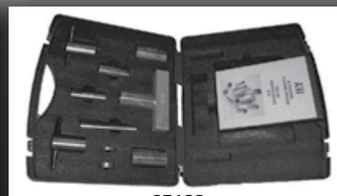
35199


Bluereach Washers for Aisin

BLUEREACH Automation & Control ProParts


Bluereach Bushes

Benefits of using the tool kit sold exclusively by Seal Aftermarket Products:

Save Money
- One time tool charge- works on an endless amount of solenoids
- Uses original canisters
- No need to buy aftermarket solenoids
- No need to buy OE valve body

Save Time
- Cleaning and re-installing original solenoids
- Instructional DVD included
- No downtime waiting on solenoid parts

TOLEDO TRANS-KIT · BRYCO

Seal Aftermarket Products LLC
2315 S.W. 32 Ave., Pembroke Park, FL 33023 • Phone 954-364-2400 • Toll Free 800-582-2760 • Fax 954-364-2401
www.sealaftermarketproducts.com

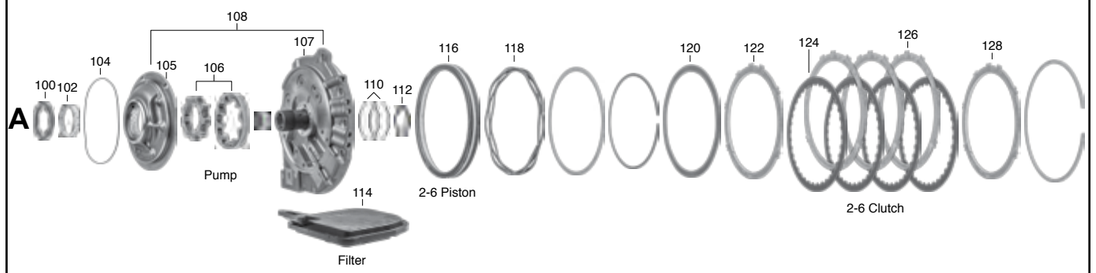
A
100
102
104
105
106
107
108
110
112
114
116
118
120
122
124
126
128
Pump
Filter
2-6 Piston
2-6 Clutch

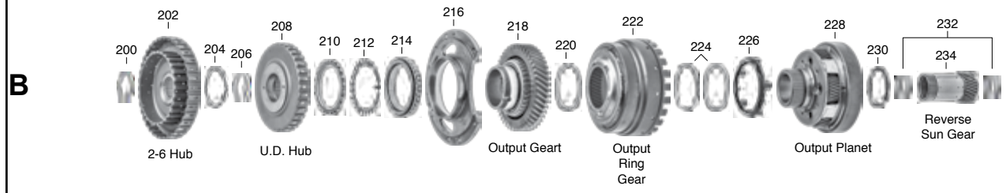
B
200
202
204
206
208
210
212
214
216
218
220
222
224
226
228
230
232
234
2-6 Hub
U.D. Hub
Output Geart
Output Ring Gear
Output Planet
Reverse Sun Gear

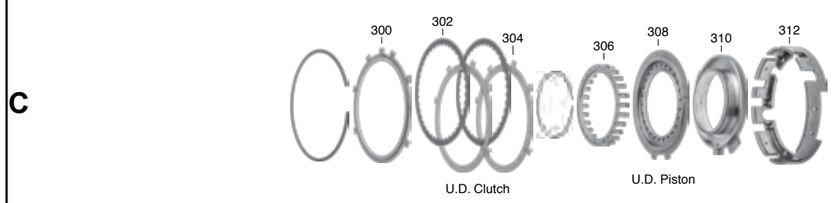
C
300
302
304
306
308
310
312
U.D. Clutch
U.D. Piston

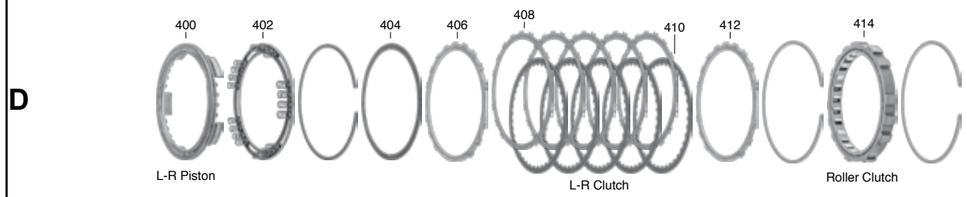
D
400
402
404
406
408
410
412
414
L-R Piston
L-R Clutch
Roller Clutch

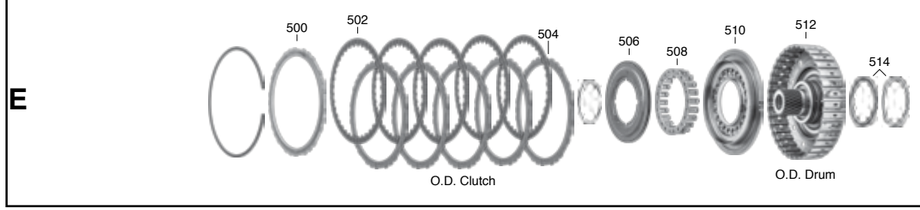
E
500
502
504
506
508
510
512
514
O.D. Clutch
O.D. Drum

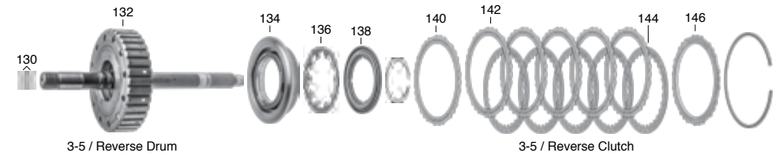
A
130
132
134
136
138
140
142
144
146
3-5 / Reverse Drum
3-5 / Reverse Clutch

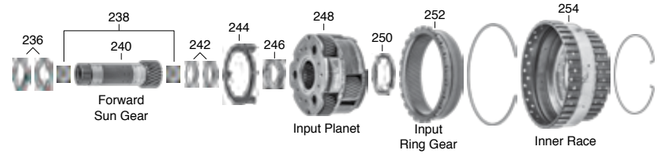
B
236
238
240
242
244
246
248
250
252
254
Forward Sun Gear
Input Planet
Input Ring Gear
Inner Race

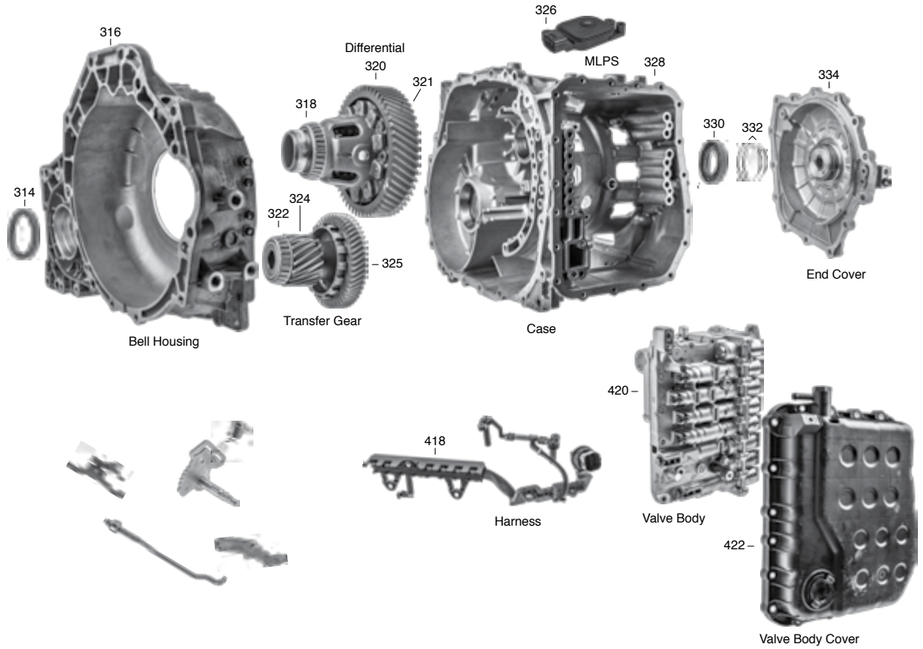
C
316
Differential
320
321
326
MLPS
328
318
330
332
334
314
324
322
325
Transfer Gear
Case
End Cover
Bell Housing

D
418
420
422
Harness
Valve Body
Valve Body Cover

ILL.		Qty.	Year	Part #	Ref. #
MASTER OVERHAUL KITS (WITH STEELS)					
N.I.	A6LF2	1	09-Up	211006B	N.L.
MASTER OVERHAUL KITS (LESS STEELS)					
N.I.	A6LF2	1	09-Up	211004B	N.L.
OVERHAUL KITS (WITH RINGS AND SEALS)					
N.I.	A6LF2	1	09-Up	211002B	N.L.
GASKETS & O-RINGS					
104A	O-Ring, Pump	1	09-Up	211311B	N.L.
N.I.	Gasket, Side Pan (Plastic)	1	09-Up	211300B	N.L.
N.I.	Gasket, Side Pan (Metal)	1	09-Up	211300D	N.L.
BONDED PISTONS					
138A	Retainer, 3-5/Reverse (Bonded)	1	09-Up	211985B	N.L.
506E	Retainer, Overdrive (Bonded)	1	09-Up	211980B	N.L.
METAL CLAD SEALS					
100A	Pump	1	09-Up	211070B	N.L.
314C	Bell Housing (2WD)	1	09-Up	211077B	N.L.
314C	Bell Housing (4WD)	1	09-Up	211077D	N.L.
330C	Case	1	09-Up	211076B	N.L.
N.I.	Manual Lever Shaft	1	09-Up	211072B	N.L.
SEALING RINGS & KITS					
N.I.	Sealing Ring Kit	1	09-Up	211175BK	N.L.
110A	Pump Cover	2	09-Up	211179B	N.L.
130A	Input Shaft	2	09-Up	211177B	N.L.
332C	End Cover	2	09-Up	211185B	N.L.
FRICTION PLATES					
124A	2-6 Brake	4	09-Up	211104B	N.L.
144A	3-5/Reverse (Single Sided Internal)	5	09-Up	211106B	N.L.
302C	Underdrive	3	09-Up	211108B	N.L.
410D	Low/ Reverse	5	09-Up	211114B	N.L.
502E	Overdrive	5	09-Up	211100B	N.L.
STEEL PLATES					
126A	2-6 Brake	3	09-Up	211124B	N.L.
142A	3-5/Reverse (Single Sided External) .078 Thick	4	09-Up	211126B	N.L.
142A	3-5/Reverse (Single Sided External) .090 Thick	1	09-Up	211126D	N.L.
304C	Underdrive	3	09-Up	211128B	N.L.
408D	Low/ Reverse	5	09-Up	211134B	N.L.
504E	Overdrive .110 Thick	4	09-Up	211120B	N.L.
504E	Overdrive .120 Thick	1	09-Up	211120D	N.L.
PRESSURE PLATES					
122A	2-6 Brake (Apply) (Selective)	1	09-Up	211145B	N.L.
128A	2-6 Brake (Backing)	1	09-Up	211144B	N.L.
146A	3-5/Reverse	1	09-Up	211146B	N.L.
300C	Underdrive	1	09-Up	211148B	N.L.
406D	Low/ Reverse (Apply)	1	09-Up	211155B	N.L.
412D	Low/ Reverse (Backing)	1	09-Up	211154B	N.L.
500E	Overdrive	1	09-Up	211140B	N.L.
FILTERS					
114A	Main	1	09-Up	211010B	N.L.
BUSHINGS					
N.I.	Bushing Kit	1	09-Up	211030B	N.L.
102A	Pump Body	1	09-Up	211034B	N.L.
109A	Pump Cover	1	09-Up	211036B	N.L.
206B	Underdrive Hub	1	09-Up	211040B	N.L.
232B	Sun Gear (Large)	2	09-Up	211051B	N.L.
238B	Sun Gear (Small)	2	09-Up	211052B	N.L.

ILL.		Qty.	Year	Part #	Ref. #
THRUST WASHERS/BEARINGS					
WASHERS					
112A	Pump Cover	1	09-Up	211211B	N.L.
204B	Underdrive Hub	1	09-Up	211221B	N.L.
230B	Output Planet	1	09-Up	211254B	N.L.
250B	Input Planet	1	09-Up	211238B	N.L.
BEARINGS					
200B	Bearing, 2-6 Hub	1	09-Up	211243B	N.L.
220B	Bearing, Output Gear to Output Ring Gear	1	09-Up	211251B	N.L.
224B	Bearing, Output Ring Gear to Output Planet	1	09-Up	211252B	N.L.
224B	Race, Output Ring Gear to Output Planet	1	09-Up	211252B	N.L.
236B	Bearing, Reverse Sun Gear to Forward Sun Gear	1	09-Up	211240B	N.L.
236B	Race, Reverse Sun Gear to Forward Sun Gear	1	09-Up	211240B	N.L.
242B	Race, Overdrive Drum (Front)	1	09-Up	211255B	N.L.
242B	Bearing, Overdrive Drum (Front)	1	09-Up	211255B	N.L.
318C	Differential, (Front)	1	09-Up	211292B	N.L.
321C	Differential, (Rear)	1	09-Up	211289B	N.L.
322C	Pinion, (Front)	1	09-Up	211271B	N.L.
325C	Pinion, (Rear)	1	09-Up	211273B	N.L.
514E	Bearing, End Cover	1	09-Up	211256B	N.L.
514E	Race, End Cover	1	09-Up	211256B	N.L.
N.I.	Bearing, Output Gear	2	09-Up	211202B	N.L.
N.I.	Caged Bearing, End Cover	1	09-Up	211295B	N.L.
N.I.	Caged Bearing Compound Planet (Input)	1	09-Up	211209B	N.L.
ELECTRICAL COMPONENTS					
326C	Switch, MLPS	1	09-Up	211410B	N.L.
418D	Harness, Internal	1	09-Up	211446B	N.L.
N.I.	Solenoid Group	1	09-Up	211420B	N.L.
N.I.	Black Cap Code 100825	3	09-Up	211421B	N.L.
N.I.	Red Cap Code 100826	2	09-Up	211422B	N.L.
N.I.	Biege Cap Code 100827	1	09-Up	211423B	N.L.
N.I.	Black Cap Code 04824x20431	1	09-Up	211431B	N.L.
N.I.	Black Cap Code 04824x40422	1	09-Up	211431D	N.L.
PUMPS					
108A	Pump Assembly	1	09-Up	211500B	N.L.
PUMP COMPONENTS					
105A	Pump Body w/ Gears	1	09-Up	211510B	N.L.
106A	Pump Gears (GEROTOR)	1	09-Up	211530B	N.L.
107A	Pump Stator (Cover)	1	09-Up	211520B	N.L.
DRUMS & COMPONENTS					
116A	Piston, 2-6/Brake	1	09-Up	211962B	N.L.
118A	Return Spring, 2-6/Brake	1	09-Up	211972B	N.L.
120A	Cushion, 2-6/Brake	1	09-Up	211852B	N.L.
132A	Drum, 3-5/Reverse w/ Input	1	09-Up	211555B	N.L.
134A	Piston, 3-5/Reverse	1	09-Up	211965B	N.L.
136A	Return Spring, 3-5/Reverse	1	09-Up	211975B	N.L.
138A	Retainer, 3-5/Reverse (Bonded)	1	09-Up	211985B	N.L.
202B	Hub, 2-6 / 3-5/ Reverse	1	09-Up	211572B	N.L.
208B	Hub, Underdrive	1	09-Up	211574B	N.L.
306C	Return Spring, Underdrive	1	09-Up	211974B	N.L.
308C	Piston, Underdrive	1	09-Up	211964B	N.L.
400D	Piston, Low/ Reverse	1	09-Up	211967B	N.L.
402D	Return Spring, Low/ Reverse	1	09-Up	211977B	N.L.
404D	Cushion, Low/ Reverse	1	09-Up	211857B	N.L.
506E	Retainer, Overdrive (Bonded)	1	09-Up	211980B	N.L.
508E	Return Spring, Overdrive	1	09-Up	211970B	N.L.
510E	Piston, Overdrive	1	09-Up	211960B	N.L.
512E	Drum, Overdrive	1	09-Up	211550B	N.L.

ILL.		Qty.	Year	Part #	Ref. #
PLANETS AND COMPONENTS					
222B	Ring Gear, Output	1	09-Up	211594B	N.L.
228B	Planet, Output	1	09-Up	211584B	N.L.
248B	Planet, Input	1	09-Up	211582B	N.L.
252B	Ring Gear, Input	1	09-Up	211592B	N.L.
SUN GEARS					
234B	Sun Gear, Reverse	1	09-Up	211612B	N.L.
240B	Sun Gear, Forward	1	09-Up	211614B	N.L.
ONE WAY CLUTCHES					
254B	Inner Race	1	09-Up	211664B	N.L.
414D	Roller w/ Cam	1	09-Up	211654B	N.L.
SHELLS & SUPPORTS					
216B	Support, Output Gear	1	09-Up	211711B	N.L.
310C	Support, Underdrive Piston	1	09-Up	211629B	N.L.
312C	Support, Underdrive Clutch	1	09-Up	211630B	N.L.
VALVE BODIES & GOVERNORS					
420D	Valve Body	1	09-Up	211740B	N.L.
DIFFERENTIALS					
320C	Differential (2WD)	1	09-Up	211715B	N.L.
320C	Differential (4WD)	1	09-Up	211715D	N.L.
CASES/HOUSINGS & COMPONENTS					
316C	Bell Housing	1	09-Up	211750B	N.L.
328C	Case	1	09-Up	211760B	N.L.
334C	End Cover	1	09-Up	211759B	N.L.
422D	Cover, Valve Body (Plastic)	1	09-Up	211766B	N.L.
422D	Cover, Valve Body (Metal)	1	09-Up	211766D	N.L.
MISCELLANEOUS COMPONENTS					
210B	Nut, Output Gear Support	1	09-Up	211795B	N.L.
218B	Output Gear (47T)	1	09-Up	211710B	N.L.
226B	Dam, Output Planet	1	09-Up	211699B	N.L.
244B	Dam, Input Planet (Front)	1	09-Up	211698B	N.L.
324C	Transfer Gear (51T)	1	09-Up	211712B	N.L.
324C	Pinion Gear (18T)	1	09-Up	211730B	N.L.
N.I.	Dam, Input Planet (Rear) (3 Piece)	1	09-Up	211698D	N.L.

Notes

TK TOLEDO TRANS-KIT · SEAL AFTERMARKET PRODUCTS · your source for engineered solutions · BRYCO · ProSELECT · RoadMaster

PRODUCT ANNOUNCEMENT

A6MF1/2 2009-Up

Seal Aftermarket Products now has the Overhaul Kit for the A6MF1/2 series covering 2009-Up.
Please call your Sales Representative for pricing and availability

Innovative Engineered Solutions

- Includes 2WD & 4WD Case Side Seals
- Plastic Sealing Ring Kit
- Includes Both Fiber VB Gasket & Molded Rubber VB Gasket (Forte)
- OE Pistons



Vehicle Coverage

Hyundai
- ► Tucson 2009-Up [2.0L & 2.4L]
- ► Santa Fe 2009-Up [2.4L & 2.7L]
- ► Sonata 2009-Up [2.0L & 2.4L]

Kia
- ►Forte 2011-Up [1.8L, 2.0L & 2.4L]
- ►Optima 2010-Up [2.0L & 2.4L]
- ►Sorento 2009-Up [2.4L & V6 2.7L]
- ►Sportage 2010-Up [2.0L & 2.4L]

Rebuild Kits

Available Now
TF211002A - Overhaul Kit A6MF1/2 2009-Up
TF211002AP - Overhaul Kit A6MF1/2 (With Pistons) 2009-Up

Available with 5 day lead-time
TF211004A - Master L/ Steels Kit A6MF1/2 2009-Up
TF211004AP - Master L/ Steels Kit A6MF1/2 (With Pistons) 2009-Up
TF211006A - Master W/ Steels Kit A6MF1/2 2009-Up
TF211006AP - Master W/ Steels Kit A6MF1/2 (With Pistons) 2009-Up



Components



211077E
Seal A6MF1/2 Axle - Converter Side 4WD 2009-Up
OE 45245-3B800



211985B
Piston A6MF1/2 3-5-R Balance Clutch Assembly 2009-Up
OE 45442-3BDA0



211980B
Piston A6MF1/2 Overdrive Clutch 2009-Up
OE 45542-3BDA0

Release Date 6/19/2014

Sales Policy: All shipments are FCA Pembroke Park. Price and Availability subject to change

B00014

© 2014 Seal Aftermarket Products LLC. ALL RIGHTS RESERVED. Possession of price list does not constitute offer to sell
Disclaimer - All information has been checked for accuracy, however no liability can be assumed for errors and omissions

Seal Aftermarket Products LLC · 2315 SW 32nd Avenue · Pembroke Park FL 33023 · [P] (800) 582-2760 · [F] 954-364-2401 · www.sealaftermarketproducts.com

ILL.		Qty.	Year	Part #	Ref. #
MASTER OVERHAUL KITS (WITH STEELS)					
N.I.	A6MF2 (Exc. Hybrid)	1	09-Up	211006C	N.L.
N.I.	A6MF2H (Hybrid)	1	09-Up	211006D	N.L.
MASTER OVERHAUL KITS (LESS STEELS)					
N.I.	A6MF2 (Exc. Hybrid)	1	09-Up	211004C	N.L.
N.I.	A6MF2H (Hybrid)	1	09-Up	211004D	N.L.
OVERHAUL KITS (WITH RINGS AND SEALS)					
N.I.	A6MF2 (Exc. Hybrid)	1	09-Up	211002C	N.L.
N.I.	A6MF2H (Hybrid)	1	09-Up	211002D	N.L.
GASKETS & O-RINGS					
104A	0-Ring, Pump	1	09-Up	211311C	N.L.
N.I.	Gasket, Side Pan (Plastic)	1	09-Up	211300C	N.L.
N.I.	Gasket, Side Pan (Metal)	1	09-Up	211300E	N.L.
METAL CLAD SEALS					
100A	Pump (Exc. Hybrid)	1	09-Up	211070C	N.L.
314C	Bell Housing (Hybrid)	1	09-Up	211077E	N.L.
314C	Bell Housing (2WD) (Exc. Hybrid)	1	09-Up	211077C	N.L.
314C	Bell Housing (4WD) (Exc. Hybrid)	1	09-Up	211077E	N.L.
330C	Case	1	09-Up	211076C	N.L.
N.I.	Manual Lever Shaft	1	09-Up	211072C	N.L.
SEALING RINGS & KITS					
N.I.	Sealing Ring Kit (Exc. Hybrid)	1	09-Up	211175CK	N.L.
N.I.	Sealing Ring Kit (Hybrid)	1	09-Up	211175EK	N.L.
110A	Pump	2	09-Up	211179C	N.L.
130A	Input Shaft (Exc. Hybrid)	2	09-Up	211177C	N.L.
130A	Input Shaft (Hybrid) (Front)	3	09-Up	211177E	N.L.
332C	End Cover	2	09-Up	211185C	N.L.
N.I.	Input Shaft (Hybrid) (Rear)	2	09-Up	211178C	N.L.
FRICTION PLATES					
124A	2-6 Brake	4	09-Up	211104C	N.L.
144A	3-5/Reverse	4-5	09-Up	211106C	N.L.
302C	Underdrive	3	09-Up	211108C	N.L.
410D	Low/ Reverse	5	09-Up	211114C	N.L.
502E	Overdrive	5	09-Up	211100C	N.L.
N.I.	Start (Hybrid)	6	09-Up	211103C	N.L.
STEEL PLATES					
126A	2-6 Brake (Exc. Hybrid)	3	09-Up	211124C	N.L.
126A	2-6 Brake (Hybrid)	3	09-Up	211124E	N.L.
142A	3-5/Reverse	4	09-Up	211126C	N.L.
142A	3-5/Reverse (Exc. Hybrid)	1	09-Up	211126E	N.L.
142A	3-5/Reverse (Hybrid)	2	09-Up	211126F	N.L.
304C	Underdrive	3	09-Up	211128C	N.L.
408D	Low/ Reverse	5	09-Up	211134C	N.L.
504E	Overdrive	4	09-Up	211120C	N.L.
504E	Overdrive	1	09-Up	211120E	N.L.
N.I.	Start (Hybrid)	5	09-Up	211123C	N.L.
N.I.	Start (Hybrid)	1	09-Up	211123E	N.L.
PRESSURE PLATES					
122A	2-6 Brake (Apply)	1	09-Up	211145C	N.L.
128A	2-6 Brake (Backing)	1	09-Up	211144C	N.L.
146A	3-5/Reverse	1	09-Up	211146C	N.L.
300C	Underdrive	1	09-Up	211148C	N.L.
406D	Low/ Reverse (Apply)	1	09-Up	211155C	N.L.
412D	Low/ Reverse (Backing)	1	09-Up	211154C	N.L.
550E	Overdrive	1	09-Up	211140C	N.L.
N.I.	Start	1	09-Up	211143C	N.L.

ILL.		Qty.	Year	Part #	Ref. #
FILTERS					
N.I.	Main (Exc. Hybrid)	1	09-Up	211010C	N.L.
N.I.	Main (Hybrid)	1	09-Up	211010D	N.L.
BUSHINGS					
N.I.	Bushing Kit	1	09-Up	211030C	N.L.
102A	Pump Body (Ex Hybrid)	1	09-Up	211034C	N.L.
109A	Pump Cover (Ex Hybrid)	1	09-Up	211036C	N.L.
206B	Underdrive Hub	1	09-Up	211040C	N.L.
232B	Sun Gear (Large)	2	09-Up	211051C	N.L.
238B	Sun Gear (Small)	2	09-Up	211052C	N.L.
THRUST WASHERS/BEARINGS					
WASHERS					
112A	Pump (Exc. Hybrid)	1	09-Up	211211C	N.L.
112A	Pump (Hybrid)	1	09-Up	211211E	N.L.
204B	Underdrive Hub	1	09-Up	211221C	N.L.
230B	Output Planet	1	09-Up	211254C	N.L.
250B	Input Planet	1	09-Up	211238C	N.L.
BEARINGS					
200B	Bearing, 2-6/3-5 Hub	1	09-Up	211243C	N.L.
220B	Bearing, Output Gear to Output Ring Gear	1	09-Up	211251C	N.L.
224B	Bearing. Output Ring Gear to Output Planet	1	09-Up	211252C	N.L.
224B	Race, Output Ring Gear to Output Planet	1	09-Up	211252C	N.L.
236B	Bearing, Reverse Sun Gear to Forward Sun Gear	1	09-Up	211240C	N.L.
236B	Race, Reverse Sun Gear to Forward Sun Gear	1	09-Up	211240C	N.L.
242B	Race, Overdrive Drum (Front)	1	09-Up	211255C	N.L.
242B	Bearing, Overdrive Drum (Front)	1	09-Up	211255C	N.L.
318C	Differential (Front) (Exc. Hybrid)	1	09-Up	211292C	N.L.
318C	Differential (Front) (Hybrid)	1	09-Up	211292E	N.L.
321C	Differential (Rear) (Exc. Hybrid)	1	09-Up	211289C	N.L.
321C	Differential (Rear) (Hybrid)	1	09-Up	211289E	N.L.
322C	Pinion (Front) (Exc. Hybrid)	1	09-Up	211271C	N.L.
322C	Pinion (Front) (Hybrid)	1	09-Up	211271E	N.L.
325C	Pinion (Rear) (Exc. Hybrid)	1	09-Up	211273C	N.L.
325C	Pinion (Rear) (Hybrid)	1	09-Up	211273E	N.L.
514E	Bearing, End Cover (Front)	1	09-Up	211260C	N.L.
514E	Race, End Cover (Front)	1	09-Up	211260C	N.L.
N.1.	Caged Bearing Compound Planet (Input)	1	09-Up	211209C	N.L.
N.I.	Bearing, Output Gear	1	09-Up	211202C	N.L.
N.I.	Bearing, Stator (Caged) (Hybrid)	2	09-Up	211214C	N.L.
N.I.	Bearing, Start Hub (Rear)	1	09-Up	211278C	N.L.
N.I.	Bearing, Start Hub (Front)	1	09-Up	211279C	N.L.
N.I.	Bearing, Bell Housing (Hybrid)	1	09-Up	211209C	N.L.
ELECTRICAL COMPONENTS					
326C	Switch, MLPS (Exc. Hybrid)	1	09-Up	211410C	N.L.
326C	Switch, MLPS (Hybrid)	1	09-Up	211410E	N.L.
418D	Harness, Internal (Exc. Hybrid)	1	09-Up	211446C	N.L.
418D	Harness, Internal (Hybrid)	1	09-Up	211446E	N.L.
N.I.	Solenoid Group (Exc. Hybrid)	1	09-Up	211420C	N.L.
N.I.	Solenoid Group (Hybrid)	1	09-Up	211420E	N.L.
EVT COMPONENTS					
N.I.	Motor Generator Terminal (Hybrid)	1	09-Up	211454E	N.L.
N.I.	Motor Coil (Hybrid)	1	09-Up	211456E	N.L.
N.I.	Armature (Hybrid)	1	09-Up	211457E	N.L.
N.I.	Commutator (Hybrid)	1	09-Up	211458E	N.L.
PUMPS					
108A	Pump (Exc. Hybrid)	1	09-Up	211500C	N.L.
108A	Pump (Hybrid)	1	09-Up	211500E	N.L.

ILL.		Qty.	Year	Part #	Ref. #
PUMP COMPONENTS					
105A	Pump Body w/ Gears (Exc. Hybrid)	1	09-Up	211510C	N.L.
105A	Pump Body w/ Gears (Hybrid)	1	09-Up	211510E	N.L.
106A	Pump Gears (GEROTOR) (Exc. Hybrid)	1	09-Up	211530C	N.L.
106A	Pump Gears (GEROTOR) (Hybrid)	1	09-Up	211530E	N.L.
107A	Pump Stator (Exc. Hybrid)	1	09-Up	211520C	N.L.
107A	Pump Stator (Hybrid)	1	09-Up	211520E	N.L.
DRUMS & COMPONENTS					
116A	Piston, 2-6/Brake	1	09-Up	211962C	N.L.
118A	Return Spring, 2-6/Brake	1	09-Up	211972C	N.L.
120A	Cushion, 2-6/Brake	1	09-Up	211852C	N.L.
132A	Drum, 3-5/Reverse w/ Input (Exc. Hybrid)	1	09-Up	211555C	N.L.
132A	Drum, 3-5/Reverse w/ Input (Hybrid)	1	09-Up	211555E	N.L.
134A	Piston, 3-5/Reverse	1	09-Up	211965C	N.L.
136A	Return Spring, 3-5/Reverse	1	09-Up	211975C	N.L.
138A	Retainer, 3-5/Reverse (Bonded)	1	09-Up	211985C	N.L.
202B	Hub, 2-6 / 3-5/ Reverse (Exc. Hybrid)	1	09-Up	211572C	N.L.
202B	Hub, 2-6 / 3-5/ Reverse (Hybrid)	1	09-Up	211572E	N.L.
208B	Hub, Underdrive	1	09-Up	211574C	N.L.
306C	Return Spring, Underdrive	1	09-Up	211974C	N.L.
308C	Piston, Underdrive	1	09-Up	211964C	N.L.
400D	Piston, Low/ Reverse	1	09-Up	211967C	N.L.
402D	Return Spring, low/ Reverse	1	09-Up	211977C	N.L.
404D	Cushion, Low/ Reverse	1	09-Up	211857C	N.L.
506E	Retainer, Overdrive (Bonded)	1	09-Up	211980C	N.L.
508E	Return Spring, Overdrive	1	09-Up	211970C	N.L.
510E	Piston, Overdrive	1	09-Up	211960C	N.L.
512E	Drum, Overdrive (2 Groove) (Exc. Hybrid)	1	09-Up	211550C	N.L.
512E	Drum, Overdrive (3 Groove) (Hybrid)	1	09-Up	211550E	N.L.
N.I.	Drum, Start	1	09-Up	211553C	N.L.
N.I.	Hub, Start w/ input	1	09-Up	211573C	N.L.
N.I.	Piston, Start	1	09-Up	211963C	N.L.
N.I.	Return Spring, Start	1	09-Up	211973C	N.L.
N.I.	Retainer, Start	1	09-Up	211983C	N.L.
PLANETS AND COMPONENTS					
222B	Ring Gear, Output	1	09-Up	211594C	N.L.
228B	Planet, Output	1	09-Up	211584C	N.L.
248B	Planet, Input (1 Groove) (Exc. Hybrid)	1	09-Up	211582C	N.L.
248B	Planet, Input (2 Groove) (Hybrid)	1	09-Up	211582E	N.L.
252B	Ring Gear, Input (1 Groove) (Exc. Hybrid)	1	09-Up	211592C	N.L.
252B	Ring Gear, Input (2 Groove) (Hybrid)	1	09-Up	211592E	N.L.
SUN GEARS					
234B	Sun Gear, Reverse	1	09-Up	211612C	N.L.
240B	Sun Gear, Forward	1	09-Up	211614C	N.L.
ONE WAY CLUTCHES					
254B	Inner Race (1 Groove) (Exc. Hybrid)	1	09-Up	211664C	N.L.
254B	Inner Race (2 Groove) (Hybrid)	1	09-Up	211664CA	N.L.
414D	Roller w / cam (.800") (Exc. Hybrid)	1	09-Up	211654C	N.L.
414D	Roller w / cam (.860") (Hybrid)	1	09-Up	211654CA	N.L.
SHELLS & SUPPORTS					
216B	Support, Output Gear (Exc. Hybrid)	1	09-Up	211711C	N.L.
216B	Support, Output Gear (Hybrid)	1	09-Up	211711E	N.L.
310C	Support, Underdrive Piston	1	09-Up	211629C	N.L.
312C	Support, Underdrive Clutch	1	09-Up	211630C	N.L.
VALVE BODIES & GOVERNORS					
420D	Valve Body (Exc. Hybrid)	1	09-Up	211740C	N.L.
420D	Valve Body (Hybrid)	1	09-Up	211740E	N.L.

ILL.		Qty.	Year	Part #	Ref. #
DIFFERENTIALS					
320C	Differential (2WD) (Exc. Hybrid)	1	09-Up	211715C	N.L.
320C	Differential (2WD) (Hybrid)	1	09-Up	211715E	N.L.
320C	Differential (4WD) (Exc. Hybrid)	1	09-Up	211715F	N.L.
320C	Differential (4WD) (Hybrid)	1	09-Up	211715G	N.L.
CASES/HOUSINGS & COMPONENTS					
316C	Bell Housing (Exc. Hybrid)	1	09-Up	211750C	N.L.
316C	Bell Housing (Hybrid)	1	09-Up	211750E	N.L.
328C	Case (Exc. Hybrid)	1	09-Up	211760C	N.L.
328C	Case (Hybrid)	1	09-Up	211760E	N.L.
334C	End Cover (Exc. Hybrid)	1	09-Up	211759C	N.L.
334C	End Cover (Hybrid)	1	09-Up	211759E	N.L.
422D	Cover, Valve Body (Plastic)	1	09-Up	211766C	N.L.
422D	Cover, Valve Body (Metal)	1	09-Up	211766E	N.L.
N.I.	Motor Housing (Hybrid)	1	09-Up	211751E	N.L.
N.I.	Motor Terminal (Cable) Housing (Hybrid)	1	09-Up	211753E	N.L.
MISCELLANEOUS COMPONENTS					
210B	Nut, Output Gear Support	1	09-Up	211795C	N.L.
218B	Output Gear (47T) (.830" Wide) (Exc. Hybrid)	1	09-Up	211710C	N.L.
218B	Output Gear (471) (.915" Wide) (Hybrid)	1	09-Up	211710E	N.L.
226B	Dam, Output Planet	1	09-Up	211699C	N.L.
244B	Dam, Input Planet (Front)	1	09-Up	211698C	N.L.
324C	Transfer Gear (51T) (Exc. Hybrid)	1	09-Up	211712C	N.L.
324C	Transfer Gear (53T) (Hybrid)	1	09-Up	211712E	N.L.
324C	Pinion Gear (18T) (Exc. Hybrid)	1	09-Up	211730C	N.L.
324C	Pinion Gear (18T) (Hybrid)	1	09-Up	211730E	N.L.
N.I.	Dam, Input Planet (Rear) (3 Piece)	1	09-Up	211698E	N.L.
N.I.	Nut, Stator (Hybrid)	1	09-Up	211795E	N.L.

Notes

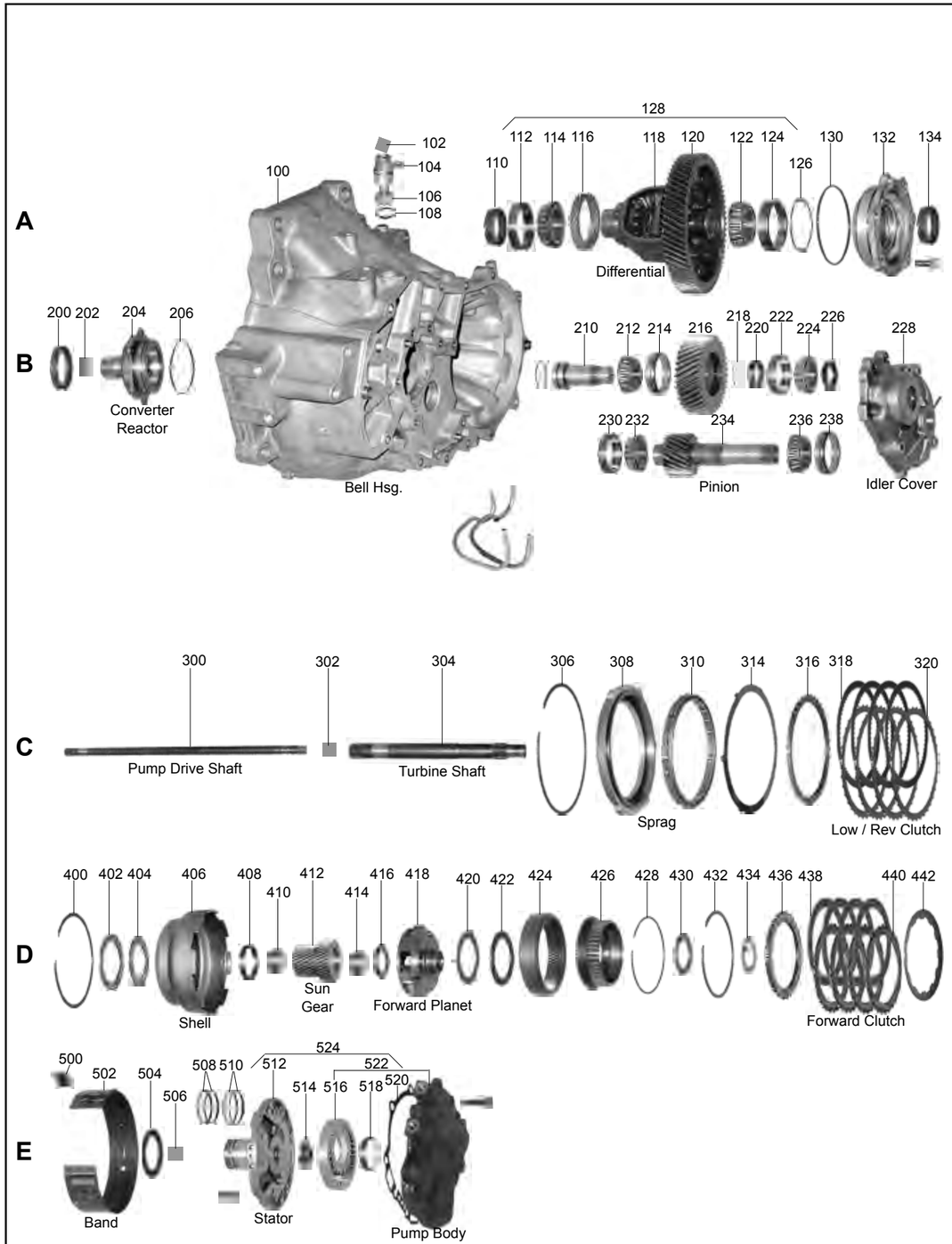
A
B
C
D
E
100
102
104
106
108
110
112
114
116
118
120
122
124
126
128
130
132
134
Differential
Bell Hsg.
200
202
204
206
Converter
Reactor
210
212
214
216
218
220
222
224
226
228
230
232
234
236
238
Pinion
Idler Cover
300
302
304
306
308
310
314
316
318
320
Pump Drive Shaft
Turbine Shaft
Sprag
Low / Rev Clutch
400
402
404
406
408
410
412
414
416
418
420
422
424
426
428
430
432
434
436
438
440
442
Shell
Sun
Gear
Forward Planet
Forward Clutch
500
502
504
506
508
510
512
514
516
518
520
522
524
Band
Stator
Pump Body

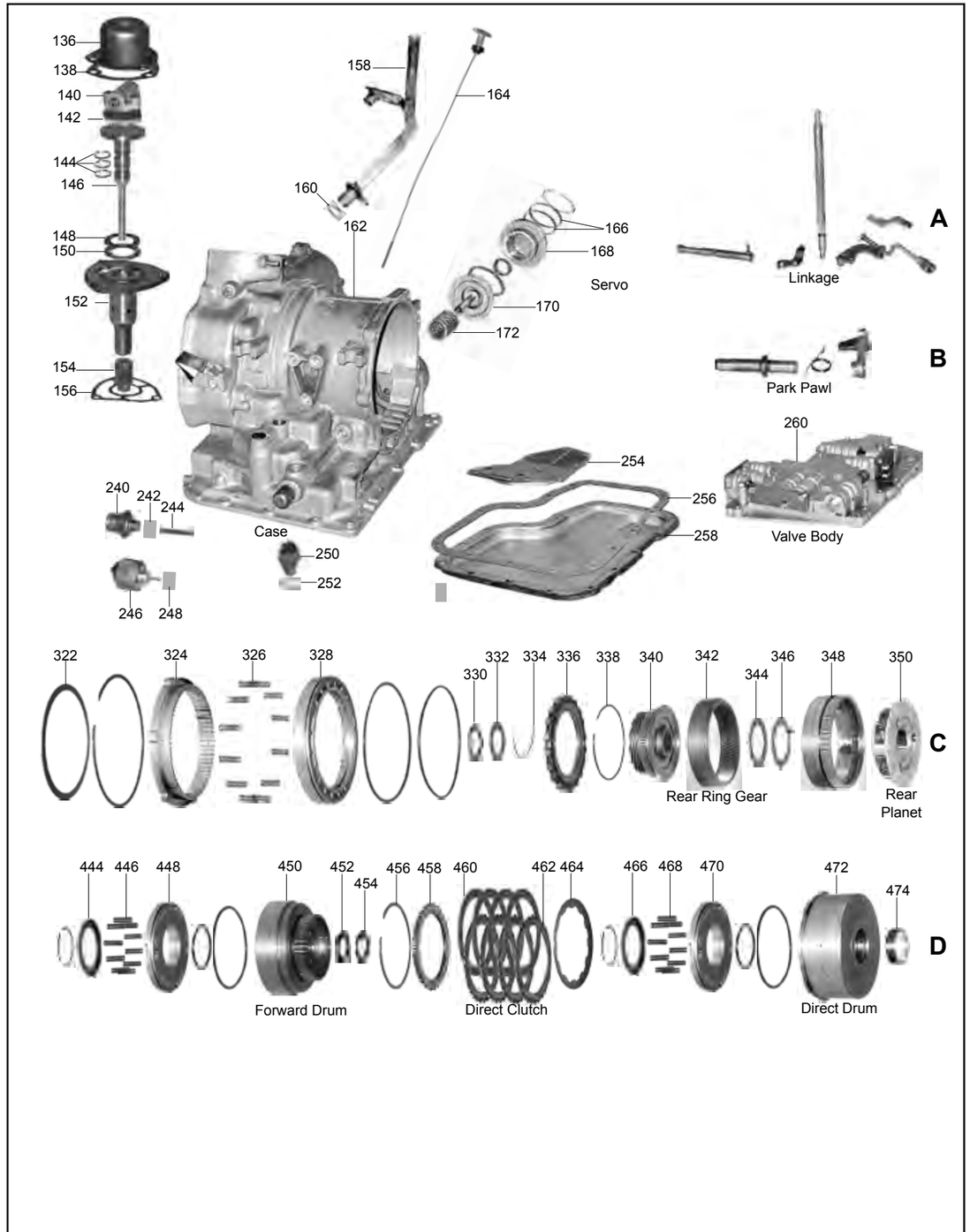
A
B
C
D
136
138
140
142
144
146
148
150
152
154
156
158
160
162
164
166
168
170
172
Servo
Linkage
Park Pawl
240
242
244
246
248
250
252
Case
254
256
258
260
Valve Body
322
324
326
328
330
332
334
336
338
340
342
344
346
348
350
Rear Ring Gear
Rear
Planet
444
446
448
450
452
454
456
458
460
462
464
466
468
470
472
474
Forward Drum
Direct Clutch
Direct Drum

ILL.		Qty.	Year	Part #	Ref. #
MASTER OVERHAUL KITS (WITH STEELS)					
N.I.	F3A, MX-1, KF100A	1	81-Up	18006	N.L.
MASTER OVERHAUL KITS (LESS STEELS)					
N.I.	F3A, MX-1, KF100	1	81-Up	18004	N.L.
OVERHAUL KITS (WITH RINGS AND SEALS)					
N.I.	F3A, MX-1, KF100	1	81-Up	18002	N.L.
GASKETS & O-RINGS					
138A	Gasket, Governor Cover	1	81-Up	18306A	N.L.
256B	Gasket, Bottom Pan	1	81-Up	18300	N.L.
520E	Gasket, Pump Body to Case	1	81-Up	18310	N.L.
METAL CLAD SEALS					
110A	Axle (Mazda and Ford)	2	81-Up	42076A	N.L.
110A	Axle (GM and Isuzu)	2	81-Up	83076C	N.L.
200B	Front	1	81-Up	18070	N.L.
FRICTION PLATES					
318C	Low/Reverse .060" (62T)	4-5	81-Up	18114	N.L.
438D	Forward and Direct .063" (44T)	6-7	81-Up	53100	N.L.
STEEL PLATES					
320C	Low/Reverse .059" (37T)	4-5	81-Up	18134	N.L.
440D	Forward and Direct .063" (37T)	6-7	81-Up	18126	N.L.
FILTERS					
254B	323, Tracer	1	86-89	18010B	N.L.
254B	626, GLC (can use 18010B)	1	81-87	18010	N.L.
254B	Aspire	1	94-97	18010E	N.L.
254B	GM, Isuzu, (Depp Pan w/o tube)	1	85-86	18010A	N.L.
254B	GM, Isuzu, (Depp Pan with 3" tube)	1	87-93	18010C	N.L.
254B	Festiva	1	89-93	18010D	N.L.
BANDS					
502E	Band	1	81-Up	13022	N.L.
BUSHINGS					
N.I.	Bushing Kit	1	81-Up	18030	N.L.
THRUST WASHERS/BEARINGS					
BEARINGS					
434D	Bearing with Race, Stator to Forward Drum 1.373" OD	1	81-Up	18229	N.L.
ONE WAY CLUTCHES					
308C	Sprag Assembly with Outer Race	1	81-Up	18642	N.L.
MISCELLANEOUS COMPONENTS					
154A	Governor Gear, Driven	1	81-Up	18684	N.L.
240B	Modulator, Adjustable (Turbo)	1	81-Up	13160B	N.L.
240B	Modulator, Adjustable (Non Turbo) (.840" Diaphragm)	1	81-Up	13160	N.L.
240B	Modulator, Adjustable (Non Turbo) (.910" Diaphragm)	1	81-Up	13160A	N.L.

Notes

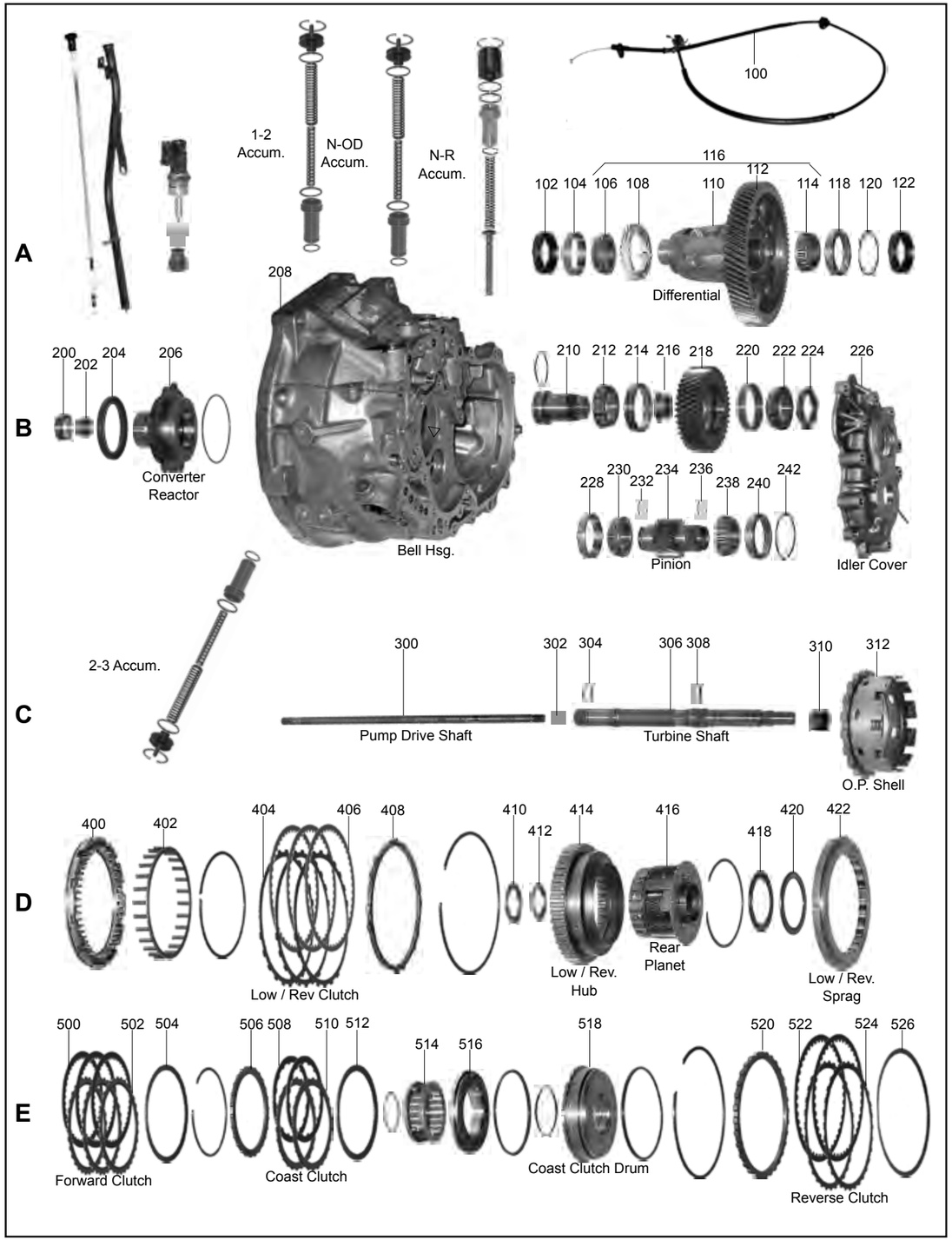
A
B
C
D
E
100
1-2 Accum.
N-OD Accum.
N-R Accum.
102 104 106 108 110 112 114 116 118 120 122
Differential
208
200 202 204 206
Converter Reactor
Bell Hsg.
210 212 214 216 218 220 222 224 226
228 230 232 234 236 238 240 242
Pinion
Idler Cover
2-3 Accum.
300 302 304 306 308 310 312
Pump Drive Shaft
Turbine Shaft
O.P. Shell
400 402 404 406 408 410 412 414 416 418 420 422
Low / Rev Clutch
Low / Rev. Hub
Rear Planet
Low / Rev. Sprag
500 502 504 506 508 510 512 514 516 518 520 522 524 526
Forward Clutch
Coast Clutch
Coast Clutch Drum
Reverse Clutch

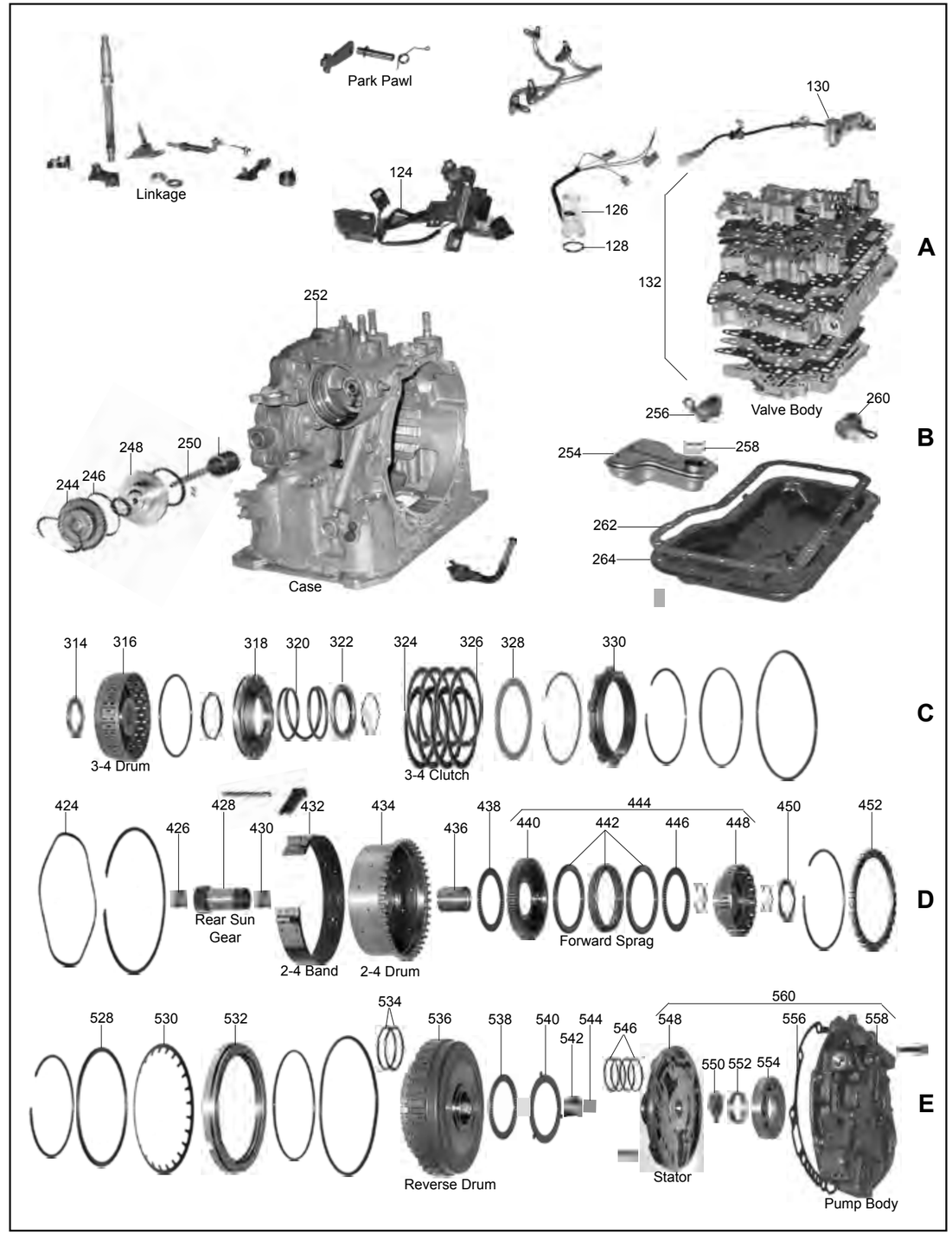
A
B
C
D
E
Linkage
Park Pawl
124
126
128
130
132
Valve Body
256
260
252
248
250
244
246
Case
254
258
262
264
314 316 318 320 322 324 326 328 330
3-4 Drum
3-4 Clutch
424 426 428 430 432 434 436 438 440 442 444 446 448 450 452
Rear Sun Gear
2-4 Band
2-4 Drum
Forward Sprag
528 530 532 534 536 538 540 542 544 546 548 550 552 554 556 558 560
Reverse Drum
Stator
Pump Body

ILL.		Qty.	Year	Part #	Ref. #
MASTER OVERHAUL KITS (WITH STEELS)					
N.I.	F4A-EL, 4EAT-F, ECAT	1	90-Up	38006A	N.L.
MASTER OVERHAUL KITS (LESS STEELS)					
N.I.	F4A-EL, 4EAT-F, ECAT	1	90-Up	38004A	N.L.
OVERHAUL KITS (WITH RINGS AND SEALS)					
N.I.	F4A-EL, 4EAT-F, ECAT	1	90-Up	38002A	N.L.
GASKETS & O-RINGS					
258B	O-Ring, Filter	1	90-Up	38379A	F1CZ-7A469A
262B	Gasket, Pan	1	90-Up	38300A	F1CZ-7A191A
556E	Gasket, Front Pump	1	90-Up	38310A	F1CZ-7A136A
N.I.	Gasket Set, Valve Body Service Kit (4 Solenoid Type)	1	90-96	38320AK	N.L.
N.I.	Gasket Set, Valve Body Service Kit (5 Solenoid Type Exc Kia)	1	97-Up	38320BK	N.L.
N.I.	Gasket Set, Valve Body Service Kit (5 Solenoid Type Kia)	1	99-Up	38320CK	N.L.
N.I.	External Seal Kit	1	90-Up	38390	N.L.
METAL CLAD SEALS					
102A	Axle (Left/Right)	2	90-Up	42076A	E6GZ-11-77D
204B	Converter	1	90-Up	28070	E92Z-7F401A
N.I.	Retainer, Converter Seal	1	90-Up	38089A	N.L.
SEALING RINGS & KITS					
N.I.	Ring Kit (Complete)	1	90-Up	38175K	N.L.
FRICTION PLATES					
326C	3-4 Clutch .062" (22T)	4	90-Up	38100A	F1CZ-7B164D
406D	Low/ Reverse .062" (48T)	4	90-Up	38114A	F1CZ-7B164E
500E	Forward .062" (Exc 03-Up Kia)	3	90-Up	38108A	F1CZ-7B164A
500E	Forward .075" (03-Up Kia)	3	90-Up	38108B	N.L.
508E	Coast .062" (16T)	2	90-Up	38112A	F1CZ-7B164B
522E	Reverse .062" (45T)	2	90-Up	38110A	F1CZ-7B164C
N.I.	Friction Module	1	90-Up	38119A	N.L.
STEEL PLATES					
324C	3-4 Clutch .063" (38T)	AR	90-Up	38120A	FU64-19-334A
324C	3-4 Clutch .071" (38T)	4	90-96	38120AA	F1CZ-7B442D
324C	3-4 Clutch .091" (38T)	4	90-97	38120AB	F1CZ-7B442F
324C	3-4 Clutch .130" (38T)	3	98-Up	38120C	FW30-19-334
404D	Low/ Reverse .063" (16T)	4	90-Up	38134A	F1CZ-7B442E
502E	Forward .063" (31T)	3	90-Up	38128A	F1CZ-7B442A
510E	Coast .063" (26T)	2	90-Up	38132A	F1CZ-7B442B
524E	Reverse .063" (32T)	2	90-Up	38130A	F1CZ-7B442C
PRESSURE PLATES					
328C	3-4 Clutch (.140")	1	90-Up	38140A	F1CZ-7B066D
408D	Low/ Reverse	1	90-Up	38154A	N.L.
452D	Forward (.179")	1	90-Up	38148A	N.L.
506E	Coast	1	90-Up	38152A	F1CZ-7B066B
520E	Reverse	1	90-Up	38150A	N.L.
FILTERS					
254B	Shallow Pan (w/o Tube)	1	90-Up	38010A	F1CZ-7A088A
254B	Deep Pan (w/ Tube)	1	93-Up	38010AB	FW01-21-500
N.I.	Screen, Valve Body (Round)	9	90-Up	28015	FU01-21-296A
FILTER KITS					
N.I.	Shallow Pan (w/o Tube)	1	90-Up	38011A	N.L.
N.I.	Deep Pan (w/ Tube)	1	90-Up	38011B	N.L.
BANDS					
432D	2-4 Band	1	90-Up	38026A	F1CZ-7D034-A
BUSHINGS					
N.I.	Bushing Kit, F4A-EL	1	90-Up	38030	N.L.
200B	Converter Hub (57.1mm, 2.248" OD)	1	90-Up	28031A	MZB1-(CPI)

ILL.		Qty.	Year	Part #	Ref. #
THRUST WASHERS/BEARINGS					
BEARINGS					
106A	Bearing & Race, Differential	2	90-Up	32254K	N.L.
ELECTRICAL COMPONENTS					
N.I.	Solenoid Set (Exc. 96-Up EPC)	1	90-Up	38420A	FU61-21-280C
N.I.	Solenoid, 1-2 Shift	1	90-Up	38421A	FB02-21-285A
N.I.	Solenoid, 2-3 & 3-4 Shift (Exc. 99-Up Kia)	1	90-Up	38422A	FU61-21-280D
N.I.	Solenoid, 2-3 & 3-4 Shift (99-Up Kia)	1	99-Up	38422B	N.L.
N.I.	Solenoid TCC	1	90-Up	38425A	FU61-21-286B
N.I.	Solenoid, EPC (Exc. 99-Up KIA)	1	96-Up	38431	FB0Z-211G1C
N.I.	Solenoid, EPC (99-Up KIA)	1	99-Up	38431A	OK2A-22-1287
N.I.	Repair Kit, External Wire Harness (6 Prong)	1	90-96	38445EK	N.L.
VALVE BODY RECALIBRATION KITS					
N.I.	Shift Kit®, F4A-EL, 4EAT-F (Transgo®)	1	90-Up	T38165A	SK® F4AEL
VALVE BODY COMPONENTS					
N.I.	Boost Valve Kit (Low Line Rise)	1	90-Up	28741TA	74846-01K
N.I.	Valve, Pressure Modifier (Oversized) (req Tool)	1	98-Up	38741L	74846-07K
N.I.	Valve, Pressure Regulator (Oversized) (req Tool)	1	98-Up	38741P	74846-06K
PUMPS					
560E	Pump Complete	1	90-Up	38500A	F1CZ-7A103A
PUMP COMPONENTS					
206B	Converter Reactor (31 Spline)	1	90-Up	38529A	N.L.
N.I.	Valve Kit w/ Spring (Fixes Low Pressure)	1	90-Up	38507P	N.L.
N.I.	Valve Kit, Pump Bypass. Self Cleaning Valve	1	90-Up	38508P	N.L.
DRUMS & COMPONENTS					
316C	3-4 Clutch (.071" Steels)	1	90-Up	38550	F1CZ-7F283A
316C	3-4 Clutch (.091" Steels)	1	90-Up	38550A	N.L.
316C	3-4 Clutch (.130" Steels)	1	90-Up	38550B	N.L.
414D	Clutch Hub & Inner Race, Low/ Reverse Clutch (34T Hub)	1	90-Up	38577A	F1CZ-7A089A
434D	Band Drum w/ Sun Gear	1	90-Up	38558A	43678261
448D	Clutch Hub, Coast Clutch (w/ Inner Race)	1	90-Up	38579A	N.L.
504E	Drum Saver Kit (Forward)	1	90-Up	38853BK	N.L.
518E	Coast Clutch	1	90-Up	38559A	N.L.
530E	Spring, Reverse Beveled Return	1	90-Up	38976A	F1CZ-7E085A
536E	Reverse & Forward Clutch	1	90-Up	38556A	F1CZ-7D044A
PLANETS & COMPONENTS					
330C	Ring Gear, Planet	1	90-Up	38594A	N.L.
416D	Planet (34T Flange)	1	90-Up	38584A	F1CZ-7A398A
SUN GEARS					
428D	Sun Gear (2 13/16" Long)	1	90-Up	38614A	N.L.
ONE WAY CLUTCHES					
422D	Roller, Low Clutch	1	90-Up	38642A	FU60194-GOB
422D	Sprag, Low Clutch	1	97-Up	38642AA	N.L.
442D	Sprag, Forward Clutch	1	90-Up	38658A	FU6019651A
444D	Sprag Assembly, Forward w/ Inner & Outer Races	1	90-Up	38648A	F1CZ-7A089B
SHELLS & SUPPORTS					
312C	Shell, Output w/ Park Gear (10 Lug Gear)	1	90-Up	38626A	F3CZ-7F283A
SHAFTS					
300C	Pump Shaft, Drive (13 9/16" Long)	1	90-Up	38671A	N.L.
306C	Turbine Shaft (11.375" Long)	1	90-Up	38673A	F1CZ-7F351A

ILL.		Qty.	Year	Part #	Ref. #
VALVE BODIES & GOVERNORS					
132A	Valve Body (4 Solenoids)	1	90-97	38740-1	N.L.
132A	Valve Body (5 Solenoids w/ Tube) (Exc. Kia)	1	97-Up	38740-2	N.L.
132A	Valve Body (5 Solenoids w/o Tube) (Exc. Kia)	1	97-Up	38740-4	N.L.
132A	Valve Body (5 Solenoids w/ Tube) (Kia)	1	98-Up	38740-3	N.L.
DIFFERENTIALS					
116A	Differential Assembly (69T Ring, 41T Idler, 17T Drive)	1	90-Up	38715CK	N.L.
116A	Differential Assembly (69T Ring, 41T Idler, 18T Drive)	1	90-Up	38715CAK	N.L.
116A	Differential Assembly (71T Ring, 38T Idler, 21T Drive)	1	90-Up	38715AK	N.L.
116A	Differential Assembly (71T Ring, 39T Idler, 20T Drive)	1	90-Up	38715AAK	N.L.
116A	Differential Assembly (71T Ring, 40T Idler, 19T Drive)	1	90-Up	38715K	N.L.
MISCELLANEOUS COMPONENTS					
108A	Gear, Drive Speed-O (For Mazda Differential)	1	90-Up	38847A	F401-17-341A
TECHNICAL MANUALS					
N.I.	Tech Manual	1	90-Up	38400	N.L.
N.I.	ATRA Rebuild Procedures (F4A, G4A)	1	90-Up	28400C	N.L.

Notes

Notes

G4A-EL (4EAT-G), GF4A-EL (4EAT-GF)

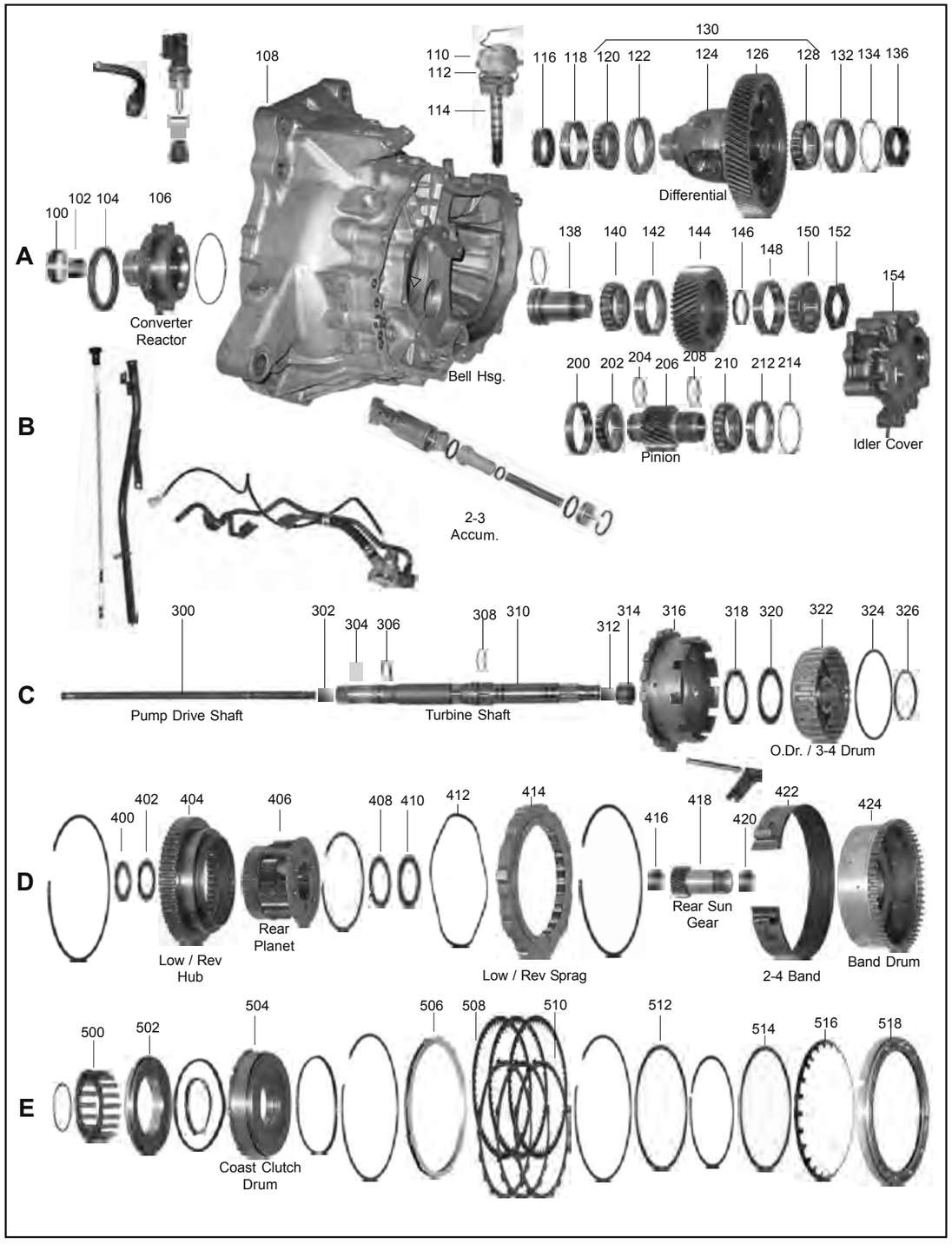

G4A-EL (4EAT-G), GF4A-EL (4EAT-GF)

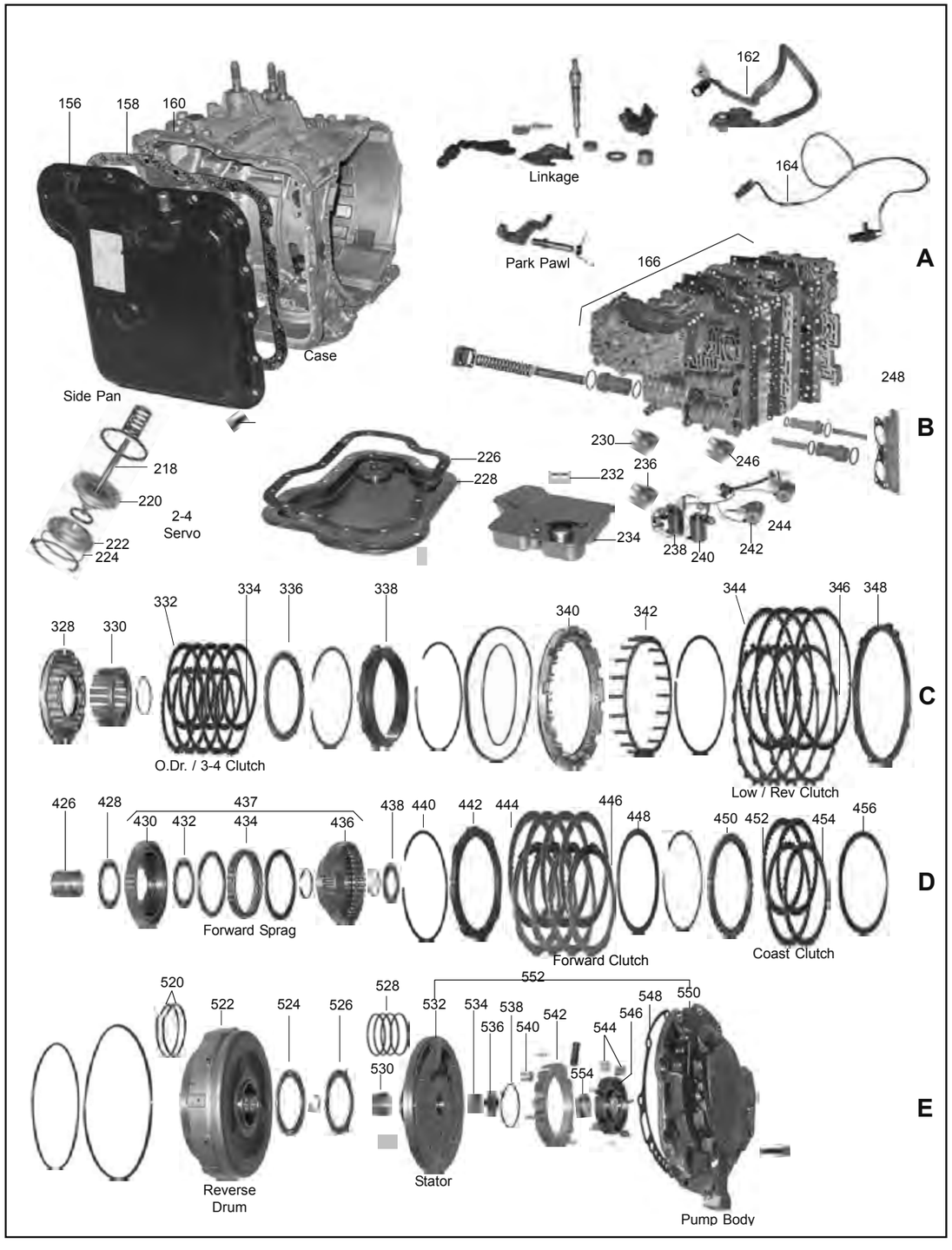

G4A-EL (4EAT-G), GF4A-EL (4EAT-GF)

FWD
4 SPEED
2 PANS

ILL.		Qty.	Year	Part #	Ref. #
MASTER OVERHAUL KITS (WITH STEELS)					
N.I.	G4A-EL, G4A-HL, 4EAT-G	1	86-87	28006	N.L.
N.I.	G4A-EL, G4A-HL, 4EAT-G	1	88-92	28006B	N.L.
N.I.	4EAT-GF, GF4A-EL	1	93-02	28006E	N.L.
MASTER OVERHAUL KITS (LESS STEELS)					
N.I.	G4A-EL, G4A-HL, 4EAT-G	1	86-87	28004	N.L.
N.I.	G4A-EL, G4A-HL, 4EAT-G	1	88-92	28004B	N.L.
N.I.	4EAT-GF, GF4A-EL	1	93-02	28004E	N.L.
OVERHAUL KITS (WITH RINGS AND SEALS)					
N.I.	G4A-EL, G4A-HL, 4EAT-G	1	86-92	28002	N.L.
N.I.	4EAT-GF, GF4A-EL	1	93-02	28002E	N.L.
GASKETS & O-RINGS					
158A	Gasket, Side Pan (Non Turbo)	1	86-02	28301	FU50-21-531
158A	Gasket, Side Pan (w/ Turbo)	1	86-02	28301A	FU32-21-531
226B	Gasket, Bottom Pan (w/ Turbo)	1	86-02	28300A	FU32-21-512
226B	Gasket, Bottom Pan (Non Turbo)	1	86-02	28300	FU01-21-512
232B	O-Ring, Filter	1	86-02	28379	FU01-21-514
548E	Gasket, Pump	1	86-02	28310	FU01-19-705A
N.I.	Gasket/ Washer, Pump Bolt	9	86-02	28309	E92Z-7N357A
N.I.	Gasket Set, Valve Body	1	86-89	28320AK	N.L.
N.I.	Gasket Set, Valve Body	1	90-92	28320BK	N.L.
N.I.	Gasket Set, Valve Body	1	93-02	28320CK	N.L.
METAL CLAD SEALS					
104A	Front w/o Flange	1	86-02	28070	E92Z-7F-401A
116A	Axle (Left/Right)	2	86-02	42076A	E6GZ-11-77D
N.I.	Speedometer	1	86-02	250078	91208-515-015
N.I.	Retainer, Front Seal	1	86-02	28089A	N.L.
SEALING RINGS & KITS					
N.I.	Ring Kit	1	86-02	28175CK	N.L.
FRICTION PLATES					
334C	3-4 (Overdrive) .063" (50T)	4-5	86-02	28100	FU08-19-370
346C	Low/ Reverse .063" (58T) V-Tooth	2	86-87	28114	FU01-19-460
346C	Low/ Reverse .063" (58T) Square Tooth	2-3	88-02	28114A	FU50-19-4F0
444D	Forward .063" (48T)	3-4	86-02	28108	FU08-19-580
452D	Coast .062" (44T) V-Tooth	2	86-87	28112	FU01-19-590
452D	Coast .062" (44T) Square Tooth	2	88-02	28112A	FU50-19-590
508E	Reverse .063" (58T) V-Tooth	2	86-87	28114	FU01-19-460
508E	Reverse .063" (58T) Square Tooth	2-3	88-00	28114A	FU50-19-4F0
508E	Reverse .063" (32T)	2	01-02	28110	GF30-19-5J0
STEEL PLATES					
332C	3-4 (Overdrive) .063" (16T)	5	86-87	28120	FU01-19-334
332C	3-4 (Overdrive) .063" (29T)	5	88-92	28120A	FU50-19-334
332C	3-4 (Overdrive) .091" (30T)	5	88-02	28120B	FU32-19-334
332C	3-4 (Overdrive) .130" (29T)	4	93-02	28120D	FU9D-19-334
344C	Low/ Reverse .063" (15T)	3-5	86-02	28134	FU01-19-451A
446D	Forward .063" (8T)	3-4	86-92	28128	FU01-19-571
446D	Forward .063" (32T)	3	93-02	28128A	FU9A-19-571A
454D	Coast .063" (32T)	2-3	86-02	28132	FU01-19-621
510E	Reverse .063" (12T)	2	86-92	28130	FU50-19-561
510E	Reverse .063" (32T)	2	93-02	28130B	FU9A-19-561
512E	Reverse Drumsaver, Replaces Belleville Spring	1	86-92	28854	74705XW
PRESSURE PLATES					
336C	3-4 Clutch (3.8mm)	1	88-02	28140A	E92Z-7B066AE
336C	3-4 Clutch (4.2mm)	1	88-02	28140C	E92Z-7B066U
336C	3-4 Clutch (4.6mm)	1	88-02	28140E	E92Z-7B066W
442D	Forward Clutch (8T) (.232")	1	86-92	28148A	E92Z-7B066A
450D	Coast Clutch (.189")	1	86-02	28152A	E92Z-7B066H
506E	Reverse Clutch (12T) (.258")	1	86-92	28151A	E92Z-7B066N
506E	Reverse Clutch (12T) (.274")	1	86-92	28151AA	E92Z-7B066P

ILL.		Qty.	Year	Part #	Ref. #
FILTERS					
234B	4 Bolt (.625" Thick)	1	86-87	28010	FU04-19-361A
234B	3 Bolt (1" Thick)	1	88-92	28010A	FU31-21-500
234B	3 Bolt (1.5" Thick)	1	88-94	28010B	FU50-21-500A
234B	3 Bolt (2.75" Thick) (w/ Plastic Pick-up Tube)	1	93-02	28010D	F32Z-7A098A
N.I.	Thimble Filter in Valve Body	1	86-92	28015	FU01-21-296A
N.I.	Thimble Filter in Valve Body	1	93-02	28015A	FU91-21-296A
FILTER KITS					
N.I.	3 Bolt (1" Thick) (All Metal)	1	88-92	28011A	N.L.
N.I.	3 Bolt (2.75" Thick) (w/ Plastic Pick-up Tube)	1	93-02	28011D	N.L.
BANDS					
422D	Non Turbo (1.50" Wide)	1	86-92	28026	FU08-21-310A
422D	Non Turbo (1.50" Wide) (Hi-Energy)	1	93-02	28026A	N.L.
422D	Turbo (1.75" Wide)	1	86-92	28026B	FU32-21-310B
BUSHINGS					
N.I.	Bushing Kit	1	86-02	28030	N.L.
100A	Converter Hub (2.255" OD)	1	86-87	28031AA	MZB57
100A	Converter Hub (2.086" OD)	1	88-02	28031A	MZB1-(CPI)
THRUST WASHERS/BEARINGS					
BEARINGS					
128A	Bearing & Race, Differential	2	86-02	28289	N.L.
140A	Bearing, Idler Gear	2	86-02	28283	E92Z-7F458A
ELECTRICAL COMPONENTS					
N.I.	Solenoid, Lock-up Control (Black Connector)	1	93-02	28416	FU9A-21-1F2C
N.I.	Solenoid Assembly, Hydraulic (1 Solenoid Valve Body) (G4A-HL)	1	86-02	28420	FU50-21-280-B
N.I.	Solenoid Assembly, Electronic (4 Solenoid Valve Body) (G4A-EL)	1	87-92	28420A	FU84-21-280
N.I.	Solenoid Assembly, Electronic (7 Solenoid Valve Body) (GF4A-EL)	1	93-02	28420C	F32Z-7A100A
N.I.	Solenoid, 1-2 Shift (Black Connector)	1	93-02	28421A	FU9A-21-1F1D
N.I.	Solenoid, 2-3 Shift (Green or Brown Connector)	1	93-02	28422A	FU9A-21-1F4D
N.I.	Solenoid, 3-4 Shift (Yellow Connector)	1	93-02	28423A	FU9A-21-1F3D
N.I.	Solenoid, Lock-Up & EPC	2	93-02	28425A	FU9A-21-1G1C
N.I.	Solenoid, 3-2 Down Shift (Black Connector)	1	93-02	28434A	FU9A-21-1F5D
VALVE BODY RECALIBRATION KITS					
N.I.	Shift Kit® (1 & 4 Solenoids) (Transgo®)	1	86-93	T28165	SK® G4A
N.I.	Shift Kit® (7 Solenoids) (GF4A-EL) (Transgo®)	1	93-02	T28165B	SK® GF4A EL
VALVE BODY COMPONENTS					
N.I.	Boost Valve Kit (w/TV Cable)	1	86-02	28741TK	N.L.
N.I.	Boost Valve Kit (w/o TV Cable)	1	86-02	28741TAK	N.L.
N.I.	Valve, Pressure Modifier (requires tool)	1	86-02	28741L-1	N.L.
N.I.	Valve, Pressure Regulator oversize (requires tool)	1	86-02	28741P-1	N.L.
PUMPS					
552E	Pump (Complete)	1	86-87	28500A	E92Z-7A103C
552E	Pump Complete (Rotor & Vanes)	1	88-92	28500AA	N.L.
552E	Pump Complete (Gears)	1	93-02	28500C	F3ZZ-7A103A
PUMP COMPONENTS					
106A	Converter Reactor (1.375" Bolt Center to Center)	1	88-02	28529	E9ZZ-7F351A
106A	Converter Reactor (1.750" Bolt Center to Center)	1	88-02	28529A	N.L.
538E	Pump Vane Expander Ring, Decreases Internal Leakage	1	86-02	28538A	N.L.
N.I.	Pump Valve w/ Spring Kit (Fixes Low Pressure)	1	93-02	38507PK	N.L.
N.I.	Pressure Regulator Spool Valve, Spring & Expander Ring	1	86-02	28507LK	N.L.
DRUMS & COMPONENTS					
322C	3-4 Clutch (30T Steels) 1.515" Overall Height (2 1/16" OD Neck)	1	86-02	28550BA	N.L.
322C	3-4 Clutch (30T Steels) 1.655" Overall Height (2 1/16" OD Neck)	1	86-02	28550BB	N.L.
404D	Clutch Hub, Low Clutch w/ Inner Race (39 Inner T)	1	86-02	28577	N.L.
512E	Spacer, Reverse Clutch Spring (Replaces Belleville Spring)	1	86-92	28854	N.L.

ILL.		Qty.	Year	Part #	Ref. #
DRUMS & COMPONENTS (Cont.)					
516E	Spring, Reverse Clutch Beveled Return (.060 Thick)	1	86-02	28976A	F32Z-7E085B
522E	Reverse (20 Spl) 3 Forward Clutches (12T Rev Steels)	1	88-92	28556C	F1ZZ-7D044A
522E	Reverse (20 Spl) 4 Forward Clutches (32T Rev Steels)	1	93-02	28556D	N.L.
PLANETS & COMPONENTS					
338C	Ring Gear, Planet (10 Lug)	1	86-02	28594	N.L.
406D	Planet (10T Flange)	1	86-02	28584B	N.L.
406D	Planet (39T Flange)	1	86-02	28584	N.L.
SUN GEARS					
418D	Sun Gear (3 1/16" Long)	1	86-02	28614B	N.L.
ONE WAY CLUTCHES					
414D	Low Overrunning Sprag (w/ Outer Race) (7 Lugs .520 Thick)	1	86-02	28642	N.L.
414D	Low Overrunning Sprag (w/ Outer Race) (7 Lugs .550 Thick)	1	86-92	28642A	FU50-19-4G0
414D	Low Overrunning Sprag (w/ Outer Race) (9 Lugs .520 Thick)	1	98-02	28642B	FU40-19-4G0
434D	Forward Sprag	1	86-02	28658	E92Z-7A089A
SHAFTS					
300C	Pump Shaft (14.312" Long)	1	86-02	28671	N.L.
300C	Pump Shaft (14.440" Long)	1	86-02	28671AA	N.L.
300C	Pump Shaft (14.750" Long)	1	86-02	28671A	F02Z-7B328A
VALVE BODIES & GOVERNORS					
166A	Valve Body 4 Solenoid	1	86-92	28740-1	N.L.
166A	Valve Body 6 Solenoid (Plug Type TOT)	1	93-02	28740-5	N.L.
166A	Valve Body 6 Solenoid (Wire Type TOT)	1	93-02	28740-3	N.L.
166A	Valve Body 7 Solenoid (Plug Type TOT)	1	93-02	28740-4	N.L.
166A	Valve Body 7 Solenoid (Wire Type TOT)	1	93-02	28740-2	N.L.
MISCELLANEOUS COMPONENTS					
122A	Gear, Speedo Drive (25 Tooth)	1	86-02	28847A	E92Z-17285A
TECHNICAL MANUALS					
N.I.	Tech Manual, Electronic G4A-EL	1	86-92	28400	N.L.
N.I.	Tech Manual, Hydraulic G4A-HL	1	86-02	28400A	N.L.
N.I.	Tech Manual, Electronic GF4A-EL	1	93-02	28400B	N.L.
N.I.	ATRA Rebuild Procedures (F4A, G4A)	1	90-Up	28400C	N.L.

Notes

FWD
4 SPEED
2 PANS

G4A-EL (4EAT-G), GF4A-EL (4EAT-GF)

Notes

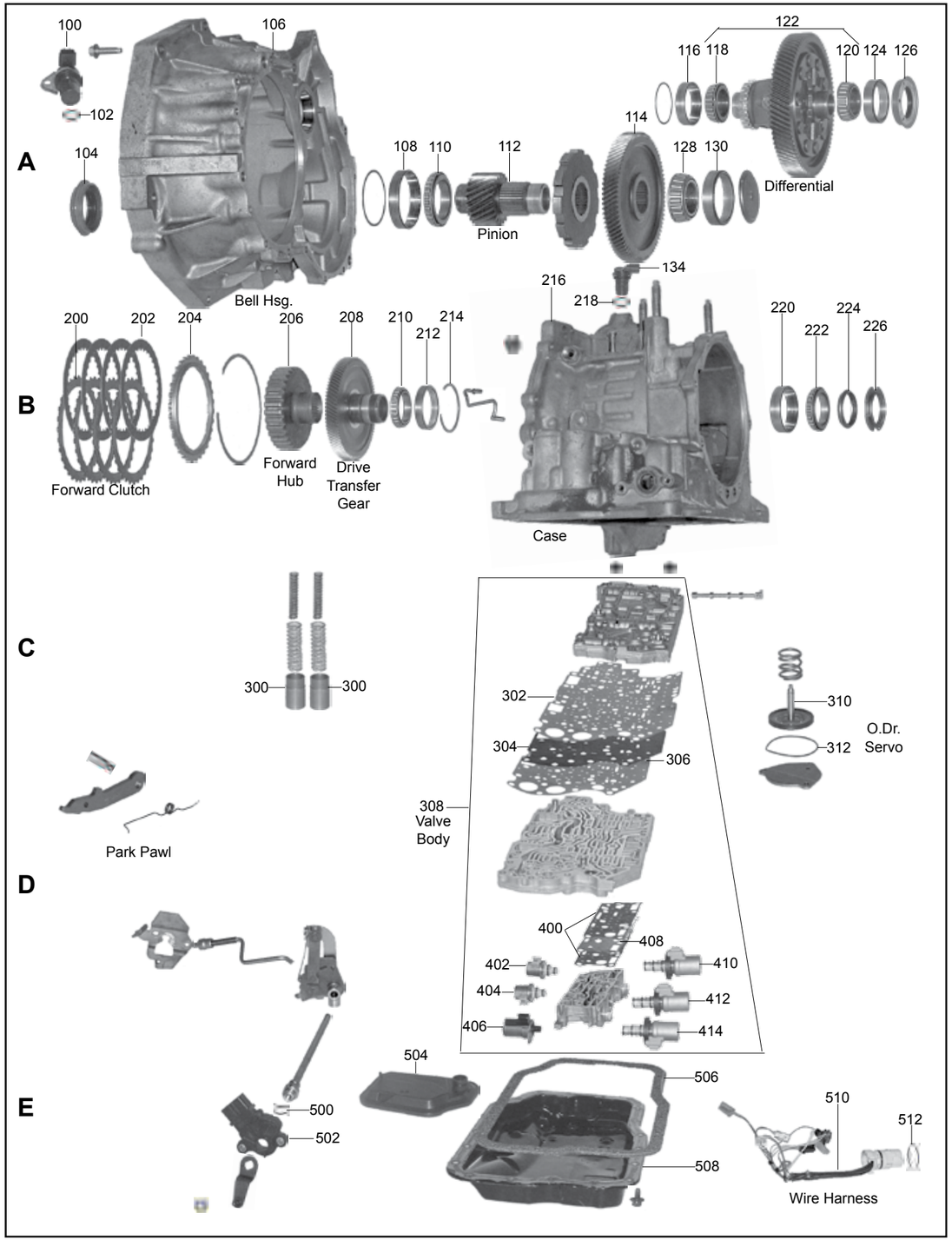
100
102
104
106
Bell Hsg.
108
110
112
Pinion
114
116
118
120
122
124
126
Differential
128
130
134
216
218
Case
200
202
204
Forward Clutch
206
Forward Hub
208
Drive Transfer Gear
210
212
214
220
222
224
226
A
B
C
D
E
300
300
302
304
306
308
Valve Body
310
312
O.Dr. Servo
Park Pawl
400
402
404
406
408
410
412
414
500
502
504
506
508
510
512
Wire Harness

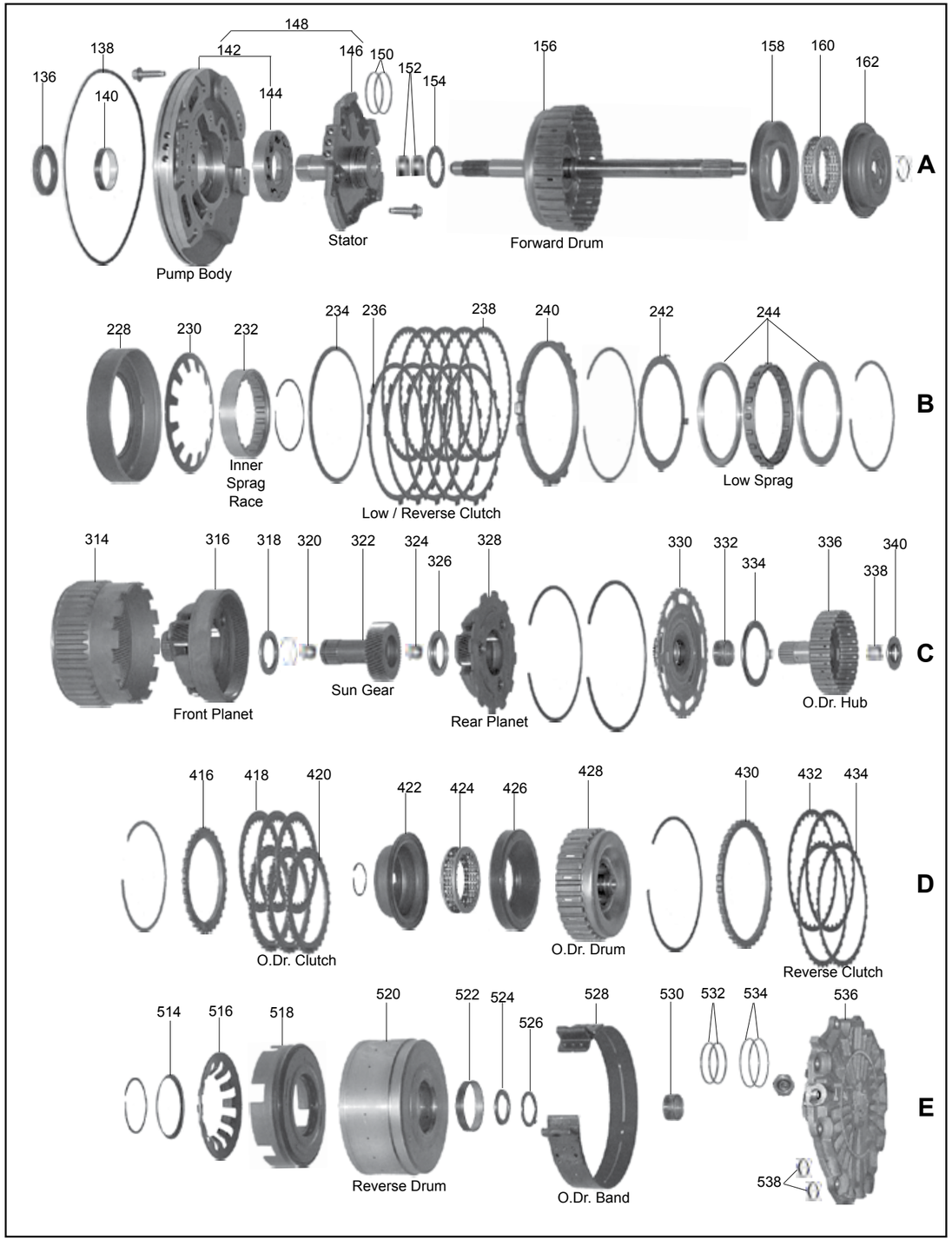
136
138
140
142
144
146
148
150
152
154
156
158
160
162
Pump Body
Stator
Forward Drum
A
228
230
232
Inner Sprag Race
234
236
238
Low / Reverse Clutch
240
242
244
Low Sprag
B
314
316
318
320
322
324
326
328
Front Planet
Sun Gear
Rear Planet
330
332
334
336
338
340
O.Dr. Hub
C
416
418
420
O.Dr. Clutch
422
424
426
428
O.Dr. Drum
430
432
434
Reverse Clutch
D
514
516
518
Reverse Drum
520
522
524
526
528
O.Dr. Band
530
532
534
536
538
E

ILL.		Qty.	Year	Part #	Ref. #
MASTER OVERHAUL KITS (WITH STEELS)					
N.I.	4F27E (Ford w/ Double Sided Direct Frictions) (w/ Pistons)	1	00-Up	138006B	N.L.
N.I.	FN4A-EL (Mazda w/ Double Sided Direct Frictions) (w/ Pistons)	1	99-Up	138006A	N.L.
N.I.	FN4A-EL (Mazda w/ Single Sided Direct Frictions) (w/ Pistons)	1	03-05	138006C	N.L.
MASTER OVERHAUL KITS (LESS STEELS)					
N.I.	4F27E (Ford w/ Double Sided Direct Frictions) (w/ Pistons)	1	00-Up	138004B	N.L.
N.I.	FN4A-EL (Mazda w/ Double Sided Direct Frictions) (w/ Pistons)	1	99-Up	138004A	N.L.
N.I.	FN4A-EL (Mazda w/ Single Sided Direct Frictions) (w/ Pistons)	1	03-05	138004C	N.L.
OVERHAUL KITS (WITH RINGS AND SEALS)					
N.I.	4F27E (Ford) (w/o Pistons)	1	00-Up	138002BA	N.L.
N.I.	FN4A-EL (Mazda) (w/o Pistons)	1	99-Up	138002AA	N.L.
BONDED PISTONS					
N.I.	Piston Kit	1	99-Up	138960K	N.L.
158A	Piston, Forward Clutch (Bonded)	1	99-Up	138964A	XS4Z-7A262CC
162A	Piston, Forward Clutch Balance (Bonded)	1	99-Up	138964B	XS4Z-7H360AB
228B	Piston, Low/ Reverse Clutch (Bonded)	1	99-Up	138967A	XS4Z-7A262BB
422D	Piston, Direct Clutch Balance (Bonded)	1	99-Up	138965B	XS4Z-7H359AB
426D	Piston, Direct Clutch (Bonded)	1	99-Up	138965A	XS4Z-7A262AB
518E	Piston, Reverse Clutch (Ford) (Bonded)	1	00-Up	138966B	XS4Z-7D402AB
518E	Piston, Reverse Clutch (Mazda) (Bonded)	1	99-Up	138966A	FN01-19-SHOA
GASKETS & O-RINGS					
138A	O-Ring, Pump to Case (Mazda)	1	99-Up	97311	FN01-19-242
138A	O-Ring, Pump to Case (Ford)	1	99-Up	138311A	XS4Z-7A248AC
302C	Gasket, Valve Body (Ford)	1	99-Up	138320A	XS4Z-7C155AB
408D	Gasket, Solenoid Body (w/ Screen)	1	99-Up	138016	XS4Z-7N220AB
408D	Gasket, Solenoid Body (w/o Screen)	1	99-Up	138328	XS4Z-7H038AB
506E	Gasket, Pan	1	99-Up	138300	N.L.
METAL CLAD SEALS					
104A	Axle (Ford)	2	00-Up	138076	XS4Z-1177AA
104A	Axle (Mazda)	2	99-Up	138076A	E6GZ-11-77D
136A	Front Pump	1	99-Up	138070	XS4Z-7A248AA
SEALING RINGS & KITS					
N.I.	Ring Kit	1	99-Up	138175AK	N.L.
FRICTION PLATES					
202B	Forward	3-4	99-Up	138108A	XS4Z-7B164CB
238B	Low/ Reverse	5	99-Up	138114A	XS4Z-7B164BB
418D	Direct (Double Sided)	3	99-Up	138108A	XS4Z-7B164CB
418D	Direct (Single Sided Internal Teeth)	3	03-05	138106	FNE1-19-370
420D	Direct (Single Sided External Teeth)	3	03-05	138126	FNE1-19-33Y
432D	Reverse	2	99-Up	138110A	XS4Z-7B164AB
STEEL PLATES					
200B	Forward	4	99-Up	138128A	XS4Z-7B442CB
236B	Low/ Reverse	5	99-Up	138134A	XS4Z-7B442BB
420D	Direct (.063")	3	99-Up	138128A	XS4Z-7B442CB
420D	Direct (.136")	3	99-Up	138126A	XS4Z-7B442DB
434D	Reverse	2	99-Up	138130A	XS4Z-7B442AB
PRESSURE PLATES					
204B	Forward (.154") (Stepped)	1	99-Up	138148A	XS4Z-7B066CB
240B	Low/ Reverse (.240") (9T)	1	99-Up	138154A	N.L.
416D	Direct (.154")	1	99-Up	138148A	XS4Z-7B066CB
430D	Reverse (.225")	1	99-Up	138150A	N.L.
FILTERS					
504E	FN4A-EL, 4F27E	1	99-Up	138010A	XS4Z-7A098AB
FILTER KITS					
N.I.	FN4A-EL, 4F27E	1	99-Up	138011AF	N.L.

ILL.		Qty.	Year	Part #	Ref. #
BANDS					
528E	Intermediate (Overdrive)	1	99-Up	138022A	XS4Z-7D034AB
BUSHINGS					
N.I.	Bushing Kit (Mazda)	1	99-Up	138030	N.L.
N.I.	Bushing Kit (Ford)	1	00-Up	138030A	N.L.
140A	Pump Body	1	99-Up	138034	N.L.
152A	Pump Cover	2	99-Up	138037	46000-01BLK
THRUST WASHERS/BEARINGS					
WASHERS					
154A	Washer, Front Pump	1	99-Up	138211	N.L.
BEARINGS					
N.I.	Bearing Kit	1	99-Up	138201	N.L.
ELECTRICAL COMPONENTS					
100A	Sensor, Output Speed Sensor (VSS) (2 Pin Connector) (Ford)	1	99-Up	138436	XS4Z-7H103AB
100A	Sensor, Output Speed Sensor (VSS) (3 Pin Connector) (Mazda)	1	99-Up	138436A	FN12-21-551A
134A	Sensor, Input Turbine Speed Sensor (TSS)	1	99-Up	138438	XS4Z-7M101AB
402D	Solenoid, A, B (Shift Control On/Off)	2	99-Up	138421A	XS4Z-7H148AA
406D	Solenoid, Electronic Pressure Control (EPC)	1	99-Up	138431	XS4Z-7G383AA
410D	Solenoid, C, D, E (Shift Control PWM)	3	99-Up	138421	XS4Z-7G484AA
502E	Switch, Transmission Range (Neutral Safety)	1	99-Up	138410	XS4Z-7F293AB
510E	Harness, Wiring (Internal)	1	99-Up	138446	XS4Z-7G276AB
N.I.	Sensor, TOT (Transmission Oil Temp)	1	99-Up	86437	F1DZ-7H141A
VALVE BODY RECALIBRATION KITS					
N.I.	Valve Body Kit	1	99-Up	138165	K4F27E
PUMPS					
148A	Pump, Ford (4F27E)	1	99-Up	138500	3S4Z-7A103AA
148A	Pump, Mazda (FN4A-EL)	1	99-Up	138500A	N.L.
PUMP COMPONENTS					
144A	Pump Gears (.535")	1	99-Up	138350	N.L.
DRUMS & COMPONENTS					
156A	Drum, Forward / Turbine Shaft (4 Clutch)	1	99-Up	138554	XS4Z-7F207AC
158A	Piston, Forward Clutch (Bonded)	1	99-Up	138964A	XS4Z-7A262CC
162A	Piston, Forward Clutch Balance (Bonded)	1	99-Up	138964B	XS4Z-7H360AB
206B	Hub, Forward	1	99-Up	138574	XS4Z-7F342AC
228B	Piston, Low/ Reverse Clutch (Bonded)	1	99-Up	138967A	XS4Z-7A262BB
336C	Hub, Direct (24 Splines)	1	99-Up	138575	N.L.
336C	Hub, Direct (25 Splines)	1	99-Up	138575A	N.L.
422D	Piston, Direct Clutch Balance (Bonded)	1	99-Up	138965B	XS4Z-7H359AB
426D	Piston, Direct Clutch (Bonded)	1	99-Up	138965A	XS4Z-7A262AB
428D	Drum, Direct (3 Clutch)	1	99-Up	138555	XS4Z-7F283AB
518E	Piston, Reverse Clutch (Ford) (Bonded)	1	00-Up	138966B	XS4Z-7D402AB
518E	Piston, Reverse Clutch (Mazda) (Bonded)	1	99-Up	138966A	FN01-19-SHOA
520E	Drum, Reverse	1	99-Up	138556	5S4Z-7D044AA
PLANETS & COMPONENTS					
314C	Ring Gear, Front	1	99-Up	138592	XS4Z-7D392AA
316C	Planet, Front (.984" Splines)	1	99-Up	138582	2S4Z-7A398BA
328C	Planet, Rear (24 Inner Splines)	1	99-Up	138584	2S4Z-7D006AA
328C	Planet, Rear (25 Inner Splines)	1	99-Up	138584A	N.L.
SUN GEARS					
322C	Sun Gear, Front	1	99-Up	138612	5S4Z-7A399AA
330C	Sun Gear, Rear (37T) (Ford)	1	99-Up	138614	XS4Z-7A019AB
330C	Sun Gear, Rear (43T) (Mazda)	1	99-Up	138614A	N.L.
ONE WAY CLUTCHES					
232B	Sprag Race, Low	1	99-Up	138664	N.L.
244B	Sprag, Low (20 Lugs)	1	99-Up	138654A	XS4Z-7A089AB

ILL.		Qty.	Year	Part #	Ref. #
VALVE BODIES & GOVERNORS					
308C	Valve Body Ford (Cast XS4P)	1	00-Up	138740-1	N.L.
308C	Valve Body Mazda (Cast FN-11)	1	99-Up	138740-2	N.L.
DIFFERENTIALS					
122A	Differential Assembly (85T / 22T Ring Gear, 57T / 59T Transfer Gear)	1	99-Up	138715HK	N.L.
122A	Differential Assembly (85T / 22T Ring Gear, 83T / 87T Transfer Gear)	1	99-Up	138715BK	N.L.
122A	Differential Assembly (86T / 21T Ring Gear, 57T / 59T Transfer Gear)	1	99-Up	138715GK	N.L.
122A	Differential Assembly (86T / 21T Ring Gear, 83T / 87T Transfer Gear)	1	99-Up	138715AK	N.L.
122A	Differential Assembly (88T / 19T Ring Gear, 86T / 82T Transfer Gear)	1	99-Up	138715LK	N.L.
CASES/HOUSINGS & COMPONENTS					
216B	Case (Ford)	1	99-Up	138760	3S4Z-7005AA
216B	Case (Mazda) (2 Cooler Fittings)	1	99-Up	138760A	N.L.
508E	Oil Pan No Drain Plug, Shallow (Ford)	1	99-Up	138765	XS4Z-7A194AB
508E	Oil Pan w/ Drain Plug, Shallow (Mazda)	1	99-Up	138765A	N.L.
536E	Case Cover, Rear (Universal) (Ford & Mazda)	1	99-Up	138759K	N.L.
MISCELLANEOUS COMPONENTS					
SERVOS AND ACCUMULATORS					
310C	Piston, Intermediate Servo (Bonded)	1	99-Up	138902	XS4Z-7D021AB
TECHNICAL MANUALS					
N.I.	Technical Manual, Ford	1	99-Up	138400	N.L.
N.I.	Technical Manual, Ford (Spanish)	1	99-Up	138400S	N.L.
N.I.	ATRA Rebuild Procedures	1	99-Up	138400A	N.L.
N.I.	ATRA Diagnostic Procedures	1	99-Up	138400B	N.L.
TOOLS					
N.I.	Servo Bore Tool	1	99-Up	T-9219	N.L.
N.I.	Servo Bore Tool Sleeve	1	99-Up	T-9219-SL	N.L.

Notes

Notes

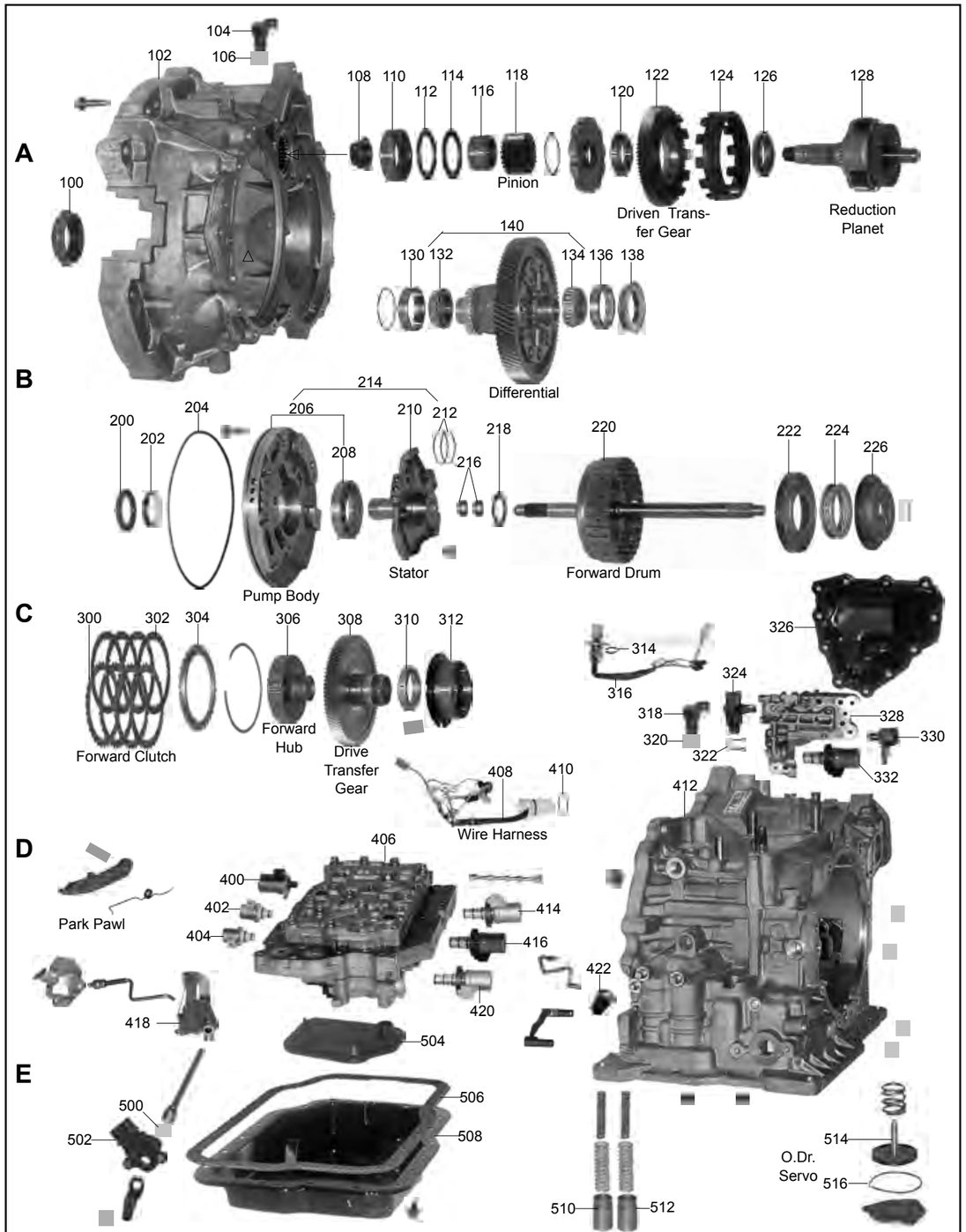
A
B
C
D
E
100
102
104
106
108
110
112
114
116
118
Pinion
120
122
Driven Trans-fer Gear
124
126
128
Reduction Planet
130
132
134
136
138
140
Differential
200
202
204
206
208
210
212
214
216
218
220
222
224
226
Stator
Forward Drum
Pump Body
300
302
304
306
308
310
312
Forward Clutch
Forward Hub
Drive Transfer Gear
314
316
318
320
322
324
326
328
330
332
408
410
Wire Harness
412
406
400
402
404
414
416
420
Park Pawl
418
422
504
500
502
506
508
510
512
514
516
O.Dr. Servo

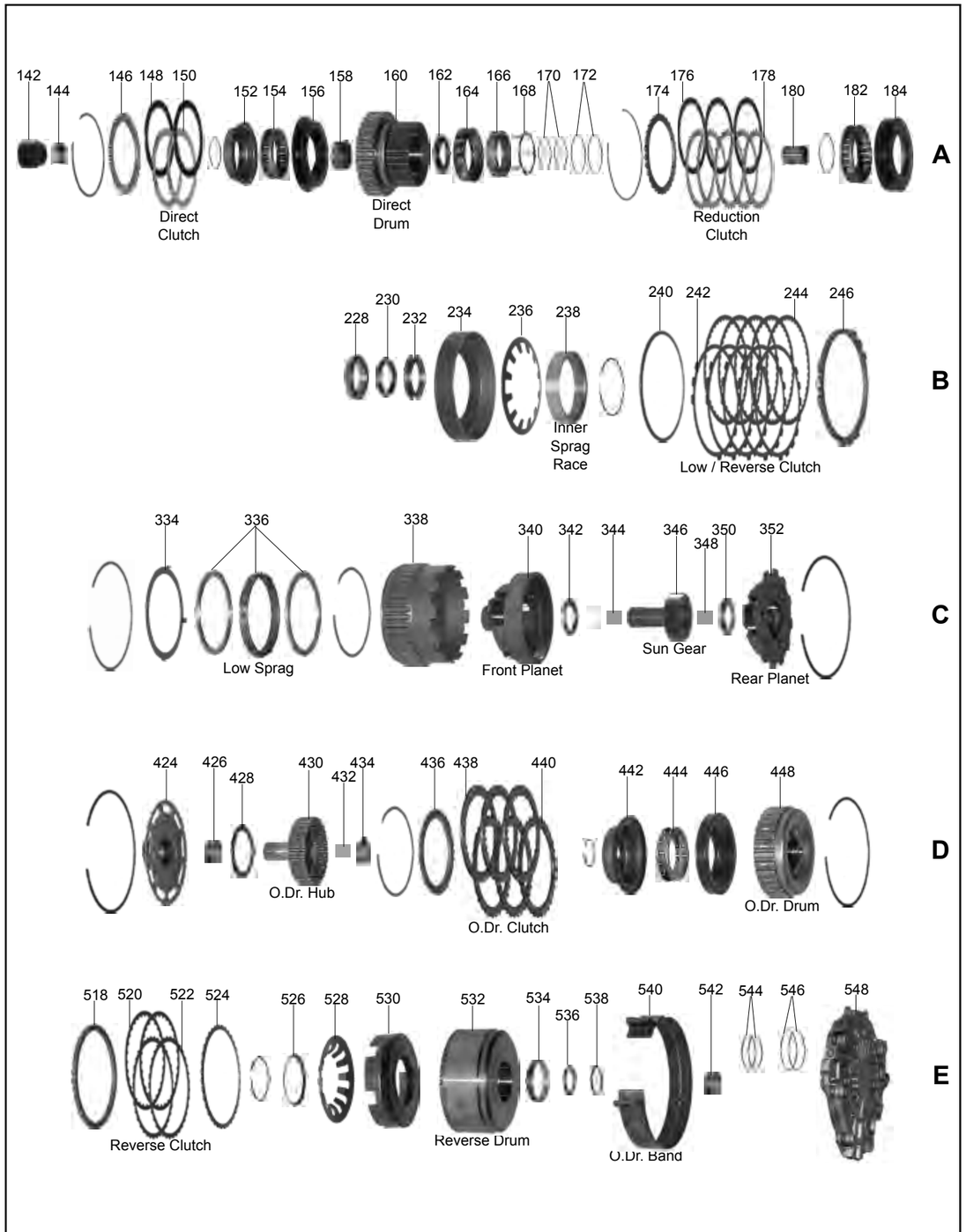
A
B
C
D
E
142
144
146
148
150
Direct Clutch
152
154
156
158
160
Direct Drum
162
164
166
168
170
172
174
176
178
Reduction Clutch
180
182
184
228
230
232
234
236
238
Inner Sprag Race
240
242
244
246
Low / Reverse Clutch
334
336
Low Sprag
338
340
342
344
Front Planet
346
348
350
352
Sun Gear
Rear Planet
424
426
428
430
O.Dr. Hub
432
434
436
438
O.Dr. Clutch
440
442
444
446
448
O.Dr. Drum
518
520
522
524
Reverse Clutch
526
528
530
532
Reverse Drum
534
536
538
540
O.Dr. Band
542
544
546
548

ILL.		Qty.	Year	Part #	Ref. #
MASTER OVERHAUL KITS (WITH STEELS)					
N.I.	FNR5 (FS5A-EL) (w/ Pistons)	1	06-Up	138006E	N.L.
MASTER OVERHAUL KITS (LESS STEELS)					
N.I.	FNR5 (FS5A-EL) (w/ Pistons)	1	06-Up	138004E	N.L.
OVERHAUL KITS (WITH RINGS AND SEALS)					
N.I.	FNR5 (FS5A-EL) (w/o Pistons)	1	06-Up	138002EA	N.L.
BONDED PISTONS					
N.I.	Piston Kit	1	06-Up	138960BK	N.L.
152A	Retainer, Reduction Direct Clutch Balance (Bonded)	1	06-Up	138981	N.L.
156A	Piston, Reduction Direct Clutch (Bonded)	1	06-Up	138961	N.L.
184A	Piston, Reduction Brake Clutch (Bonded)	1	06-Up	138968	FS50-19-HE1
222B	Piston, Forward Clutch (Bonded)	1	06-Up	138964A	XS4Z-7A262CC
226B	Retainer, Forward Clutch Balance (Bonded)	1	06-Up	138964B	XS4Z-7H360AB
234B	Piston, Low/ Reverse Clutch (Bonded)	1	06-Up	138967A	XS4Z-7A262BB
442D	Retainer, Direct Clutch Balance (Bonded)	1	06-Up	138965B	XS4Z-7H359AB
446D	Piston, Direct Clutch (Bonded)	1	06-Up	138965A	XS4Z-7A262AB
530E	Piston, Reverse Clutch (Bonded)	1	06-Up	138966A	FN01-19-SHOA
GASKETS & O-RINGS					
204B	O-Ring, Pump to Case	1	06-Up	97311	FN01-19-242
506E	Gasket, Pan	1	06-Up	138300	N.L.
N.I.	Gasket, Reduction VB Cover	1	06-Up	138301	N.L.
METAL CLAD SEALS					
100A	Axle (Left/Right)	2	06-Up	138076A	E6GZ-11-77D
200B	Front Pump	1	06-Up	138070	XS4Z-7A248AA
SEALING RINGS & KITS					
N.I.	Ring Kit	1	06-Up	138175EK	N.L.
FRICTION PLATES					
150A	Reduction Direct	2	06-Up	138102	FS50-19-580
176A	Reduction Brake	3	06-Up	138118	FS50-19-HG0
244B	Low/ Reverse	5	06-Up	138114A	XS4Z-7B164BB
302C	Forward	4	06-Up	138108A	XS4Z-7B164CB
438D	Direct (One Sided Internal Teeth)	3	06-Up	138106	FNE1-19-370
440D	Direct (One Sided External Teeth)	3	06-Up	138126	FNE1-19-33Y
520E	Reverse	2	06-Up	138110A	XS4Z-7B164AB
STEEL PLATES					
148A	Reduction Direct	3	06-Up	138128A	FN01-19-571
178A	Reduction Brake	5	06-Up	138138	FS50-19-HG1
242B	Low/ Reverse	5	06-Up	138134A	XS4Z-7B442BB
300C	Forward	4	06-Up	138128A	FN01-19-571
522E	Reverse	2	06-Up	138130A	XS4Z-7B442AB
PRESSURE PLATES					
146A	Reduction Direct (.138")	1	06-Up	138142	N.L.
246B	Low/ Reverse (.240") (9T)	1	06-Up	138154A	N.L.
304C	Forward (.154") (Stepped)	1	06-Up	138148A	XS4Z-7B066CB
436D	Direct (.154") (Stepped)	1	06-Up	138148A	XS4Z-7B066CB
518E	Reverse (.225")	1	06-Up	138150A	XS4Z-7B066CB
FILTERS					
504E	FNR5 (FS5A-EL)	1	06-Up	138010E	6E5Z-7B155A
FILTER KITS					
N.I.	FNR5 (FS5A-EL)	1	06-Up	138011E	N.L.
BANDS					
540E	Intermediate (Overdrive)	1	06-Up	138022A	XS4Z-7D034AB

ILL.		Qty.	Year	Part #	Ref. #
BUSHINGS					
N.I.	Bushing Kit	1	06-Up	138030B	N.L.
144A	Underdrive Sun Gear	1	06-Up	138040	N.L.
202B	Pump Body	1	06-Up	138034	N.L.
216B	Pump Cover	2	06-Up	138037	N.L.
344C	Front Sun Gear	2	06-Up	138052	N.L.
426D	Rear Sun Gear	1	06-Up	138056	N.L.
432D	Direct Hub	1	06-Up	138039	N.L.
534E	Reverse Drum	1	06-Up	138046	N.L.
542E	End Cover	1	06-Up	138066	N.L.
THRUST WASHERS/BEARINGS					
WASHERS					
218B	Washer, Front Pump	1	06-Up	138211	N.L.
BEARINGS					
N.I.	Bearing Kit	1	06-Up	138201	N.L.
110A	Underdrive to Case Bearing	1	06-Up	138274	N.L.
112A	Underdrive Planet (Front)	1	06-Up	138281	N.L.
120A	Transfer Bearing	2	06-Up	138279	N.L.
132A	Differential to Bell Bearing & Race	1	06-Up	138291K	N.L.
134A	Differential to Case Bearing & Race	1	06-Up	138289K	N.L.
310C	Output Bearing	2	06-Up	138268	N.L.
342C	Front Planet	1	06-Up	138234	N.L.
350C	Rear Planet	1	06-Up	138241	N.L.
428D	Rear Sun Gear	1	06-Up	138217	N.L.
434D	Direct Hub	1	06-Up	138214	N.L.
536E	End Cover	1	06-Up	138260	N.L.
ELECTRICAL COMPONENTS					
104A	Sensor, Output (OSS)	1	06-Up	138436E	N.L.
316C	Harness, Auxiliary Valve Body	1	06-Up	138446E	N.L.
318C	Sensor, Input (ISS)	1	06-Up	138438E	N.L.
324C	Sensor, Intermediate Speed	1	06-Up	138439E	N.L.
330C	Solenoid, SSF	1	06-Up	138422E	N.L.
400D	Solenoid, PCA	1	06-Up	138431	XS4Z-7G383AA
402D	Solenoid, SSPCA, SSPCB, SSPCC & PCB	4	06-Up	138421	XS4Z-7G484AA
408D	Harness, Internal	1	06-Up	138446	XS4Z-7G276AB
414D	Solenoid, SSD, SSE	2	06-Up	138421A	XS4Z-7H148AA
502E	Switch, MLPS	1	06-Up	138410E	N.L.
N.I.	Switch, Pressure Forward Clutch	1	06-Up	138411	N.L.
VALVE BODY RECALIBRATION KITS					
N.I.	Valve Body Kit	1	99-Up	138165	K4F27E
PUMPS					
214B	Pump	1	06-Up	138500B	N.L.
PUMP COMPONENTS					
208B	Pump Gears (.610")	1	06-Up	138530B	N.L.
DRUMS & COMPONENTS					
152A	Retainer, Reduction Direct Clutch Balance (Bonded)	1	06-Up	138981	N.L.
154A	Return Spring, Reduction Direct	1	06-Up	138978B	N.L.
156A	Piston, Reduction Direct Clutch (Bonded)	1	06-Up	138961	N.L.
160A	Drum, Reduction Direct (2 Clutch)	1	06-Up	138551	N.L.
184A	Piston, Reduction Brake Clutch (Bonded)	1	06-Up	138968	FS50-19-HE1
220B	Drum, Forward	1	06-Up	138554	N.L.
222B	Piston, Forward Clutch (Bonded)	1	06-Up	138964A	XS4Z-7A262CC
224B	Return Spring, Forward	1	06-Up	138974B	N.L.
226B	Retainer, Forward Clutch Balance (Bonded)	1	06-Up	138964B	XS4Z-7H360AB
234B	Piston, Low/ Reverse Clutch (Bonded)	1	06-Up	138967A	XS4Z-7A262BB
236B	Return Spring, Low/Reverse	1	06-Up	138977B	N.L.
240B	Cushion, Low/ Reverse	1	06-Up	138857	N.L.
306C	Clutch Hub, Forward	1	06-Up	138574	N.L.
430D	Clutch Hub, Direct	1	06-Up	138575	N.L.

ILL.		Qty.	Year	Part #	Ref. #
DRUMS & COMPONENTS (Cont.)					
442D	Retainer, Direct Clutch Balance (Bonded)	1	06-Up	138965B	XS4Z-7H359AB
444D	Return Spring, Direct Clutch	1	06-Up	138975B	N.L.
446D	Piston, Direct Clutch (Bonded)	1	06-Up	138965A	XS4Z-7A262AB
448D	Drum, Direct (3 Clutch)	1	06-Up	138555	N.L.
448D	Drum, Direct (4 Clutch)	1	06-Up	138555A	N.L.
524E	Cushion, Reverse	1	06-Up	138856B	N.L.
528E	Return Spring, Reverse	1	06-Up	138976B	N.L.
530E	Piston, Reverse Clutch (Bonded)	1	06-Up	138966A	FN01-19-SHOA
532E	Drum, Reverse	1	06-Up	138556	N.L.
PLANETS & COMPONENTS					
124A	Ring Gear, Underdrive (1.425" Tall)	1	06-Up	138596	N.L.
128A	Planet, Underdrive	1	06-Up	138586	N.L.
338C	Ring Gear, Output (3.080" Tall)	1	06-Up	138592	N.L.
340C	Planet, Front	1	06-Up	138582A	N.L.
352C	Planet, Rear	1	06-Up	138584A	N.L.
SUN GEARS					
142A	Sun Gear, Underdrive (31T)	1	06-Up	138616	N.L.
346C	Sun Gear, Front (49T)	1	06-Up	138612	N.L.
424D	Sun Gear, Rear w/ Flange (37T)	1	06-Up	138614B	N.L.
ONE WAY CLUTCHES					
164A	Roller, Underdrive	1	06-Up	138551-1	N.L.
168A	Anti-Rattle, Underdrive	1	06-Up	138551-2	N.L.
238B	Sprag Race, Low (Inner)	1	06-Up	138664	N.L.
336C	Sprag, Low	1	06-Up	138654A	N.L.
VALVE BODIES & GOVERNORS					
328C	Valve Body, Underdrive	1	06-Up	138744	N.L.
406D	Valve Body	1	06-Up	138740-3	N.L.
DIFFERENTIALS					
140A	Differential Assembly (85T Ring Gear) (No Groove)	1	06-Up	138715J	N.L.
140A	Differential Assembly (85T Ring Gear) (2 Grooves)	1	06-Up	138715K	N.L.
140A	Differential Assembly (88T Ring Gear) (2 Grooves)	1	06-Up	138715L	N.L.
CASES/HOUSINGS & COMPONENTS					
102A	Bell Housing	1	06-Up	138750B	N.L.
326C	Side Cover, Valve Body	1	06-Up	138766	N.L.
412D	Case (2 Pans)	1	06-Up	138760B	N.L.
508E	Pan, Bottom w/ Drain Plug	1	06-Up	138765B	N.L.
548E	Cover, End	1	06-Up	138759B	N.L.
MISCELLANEOUS COMPONENTS					
108A	Nut, Underdrive Planet	1	06-Up	138797B	N.L.
118A	Pinion Gear, Underdrive Section	AR	06-Up	138730B	N.L.
122A	Transfer Gear, Driven (Output Gear)	AR	06-Up	138710B	N.L.
166A	Race, Underdrive (Inner)	1	06-Up	138660	N.L.
308C	Transfer Gear, Drive	AR	06-Up	138712B	N.L.
N.I.	Crush Sleeve, Output Gear	1	06-Up	138696B	N.L.
N.I.	Nut, Output Gear	1	06-Up	138798B	N.L.
SERVOS & ACCUMULATORS					
514E	Servo Piston	1	06-Up	138902	N.L.

Notes

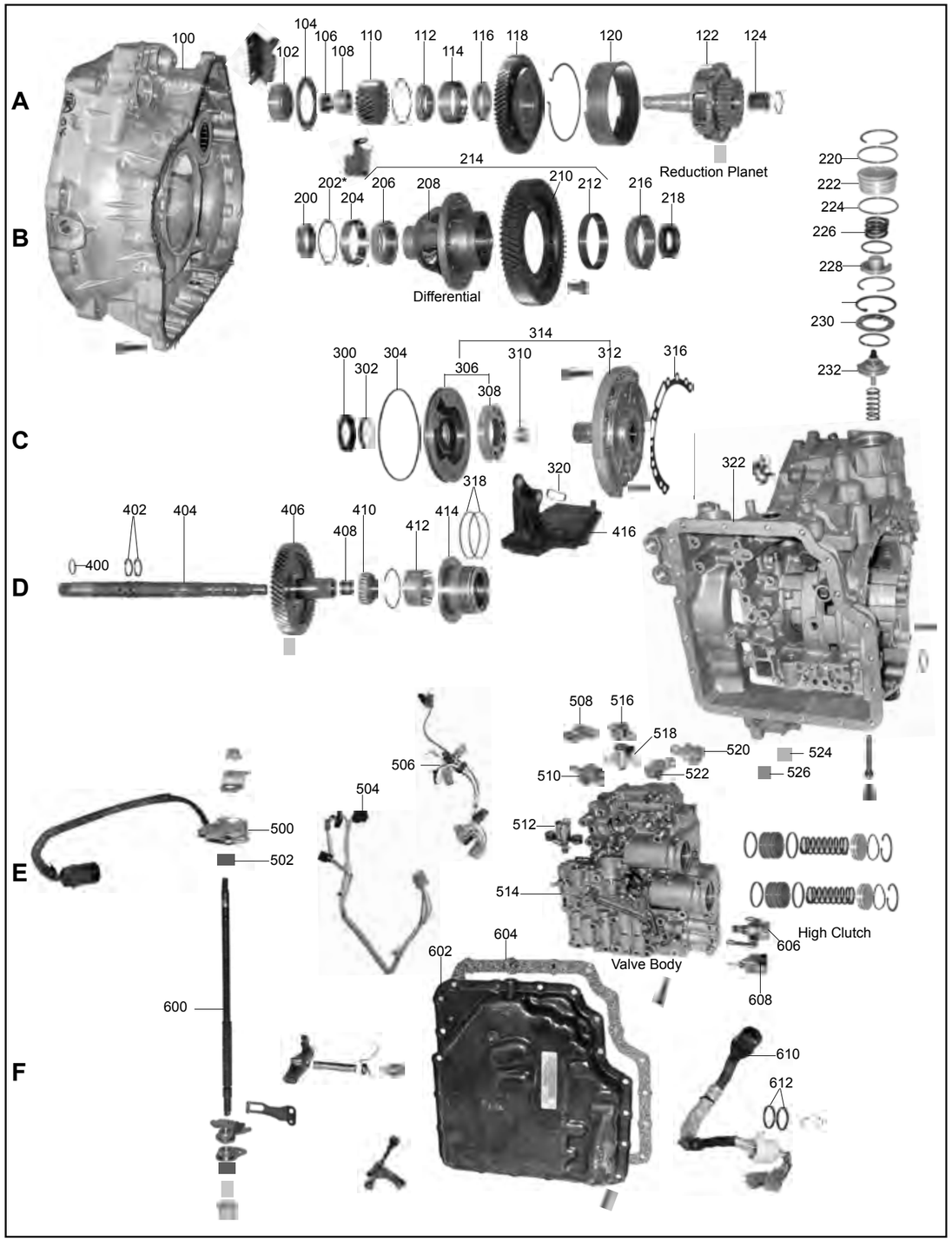
A
B
C
D
E
F
100
102
104
106
108
110
112
114
116
118
120
122
124
Reduction Planet
200
202*
204
206
208
210
212
214
216
218
Differential
220
222
224
226
228
230
232
300
302
304
306
308
310
312
314
316
318
320
322
400
402
404
406
408
410
412
414
416
500
502
504
506
508
510
512
514
516
518
520
522
524
526
600
602
604
606
608
610
612
High Clutch
Valve Body

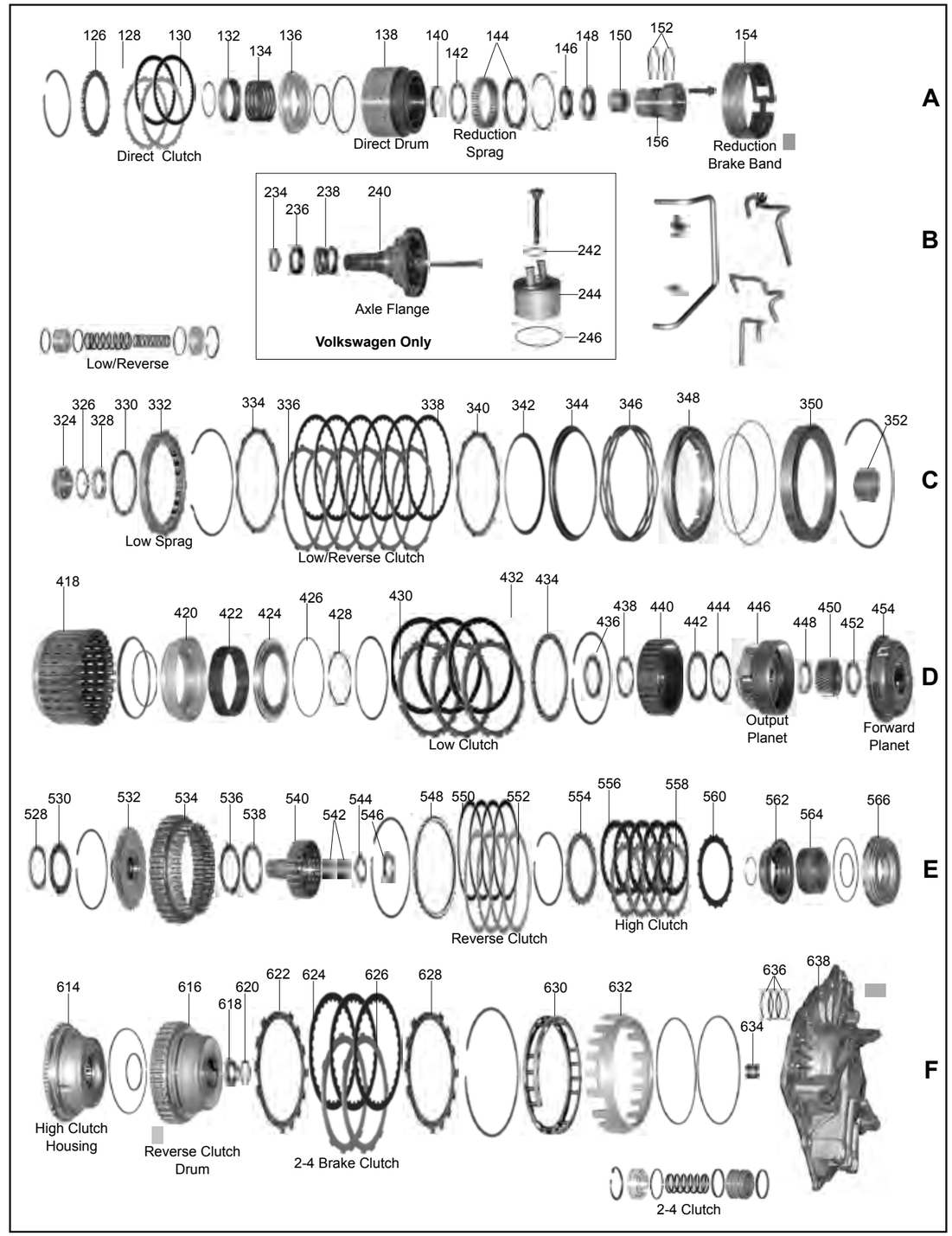
A
B
C
D
E
F
126
128
130
132
134
136
138
140
142
144
146
148
150
152
154
156
Direct Clutch
Direct Drum
Reduction Sprag
Reduction Brake Band
234
236
238
240
242
244
246
Axle Flange
Volkswagen Only
Low/Reverse
324
326
328
330
332
334
336
338
340
342
344
346
348
350
352
Low Sprag
Low/Reverse Clutch
418
420
422
424
426
428
430
432
434
436
438
440
442
444
446
448
450
452
454
Low Clutch
Output Planet
Forward Planet
528
530
532
534
536
538
540
542
544
546
548
550
552
554
556
558
560
562
564
566
Reverse Clutch
High Clutch
614
616
618
620
622
624
626
628
630
632
634
636
638
High Clutch Housing
Reverse Clutch Drum
2-4 Brake Clutch
2-4 Clutch

ILL.		Qty.	Year	Part #	Ref. #
MASTER OVERHAUL KITS (WITH STEELS)					
N.I.	Mazda, Land Rover (w/ Bonded Piston Retainers)	1	02-Up	183006A	N.L.
N.I.	Jaguar, Rover (w/ Bonded Piston Retainers)	1	99-Up	183006C	N.L.
N.I.	VW (w/ Bonded Piston Retainers)	1	00-Up	183006B	N.L.
MASTER OVERHAUL KITS (LESS STEELS)					
N.I.	Mazda, Land Rover (w/ Bonded Piston Retainers)	1	02-Up	183004A	N.L.
N.I.	Jaguar, Rover (w/ Bonded Piston Retainers)	1	99-Up	183004C	N.L.
N.I.	VW (w/ Bonded Piston Retainers)	1	00-Up	183004B	N.L.
OVERHAUL KITS (WITH RINGS AND SEALS)					
N.I.	Mazda, Land Rover	1	02-Up	183002A	N.L.
N.I.	Jaguar, Rover	1	99-Up	183002C	N.L.
N.I.	VW	1	00-Up	183002B	N.L.
GASKETS & O-RINGS					
604F	Gasket, Side Pan	1	99-Up	183301	N.L.
METAL CLAD SEALS					
200B	Axle, Right (Jaguar, Rover) (Awd)	1	99-Up	183076C	N.L.
218B	Axle, Left & Right (Mazda)	2	02-Up	183076	N.L.
218B	Axle, Left & Right(VW)	2	02-Up	183076A	N.L.
218B	Axle, Left & Right (Land Rover)	2	02-Up	183076B	N.L.
218B	Axle, Left & Right (Jaguar, Rover) (2wd)	1	99-Up	183077	N.L.
300C	Pump	1	02-Up	183070	N.L.
FRICTION PLATES					
130A	Direct	4	99-Up	183100	FP01-19-580
338C	Low/ Reverse	6	99-Up	83114BA	31662-80X02
432D	Low	7	99-Up	23108	31532-AA170
550E	Reverse	2	99-Up	183110	FP01-19-610
556E	High	5	99-Up	83106BA	31532-80X10
624F	2-4	3	99-Up	183104	FP01-19-3VO
STEEL PLATES					
128A	Direct	4	99-Up	183120	FP01-19-499
336C	Low/ Reverse	5	99-Up	183134	FP01-19-609
430D	Low	7	99-Up	183128	FP01-19-561
552E	Reverse	2	99-Up	183130	FP01-19-571
558E	High (.063")	1	99-Up	183126A	FP01-19-6E2
558E	High (.094")	4	99-Up	183126	FP01-19-6E1
626F	2-4	2	99-Up	183124	FP01-19-3N4
PRESSURE PLATES					
126A	Direct (.170")	1	99-Up	183140	N.L.
334C	Low/ Reverse (Backing) (.150")	1	99-Up	183154	N.L.
334C	Low/ Reverse (Backing) (.250")	1	99-Up	183154A	N.L.
340C	Low/ Reverse (Apply) (.100")	1	99-Up	183155A	N.L.
434D	Low (.160")	1	99-Up	183148	N.L.
548E	Reverse (.150")	1	99-Up	183150A	N.L.
554E	High (.118")	1	99-Up	183146	N.L.
554E	High (.134")	1	99-Up	183146B	N.L.
622F	2-4 Brake (Backing) (.165")	1	99-Up	183144	N.L.
628F	2-4 Brake (Apply) (.165")	1	99-Up	183145A	N.L.
628F	2-4 Brake (Apply) (.300")	1	99-Up	183145B	N.L.
FILTERS					
416D	Round Pickup (Jaguar, Mazda, Land Rover)	1	99-Up	183010	FP01-21-500
416D	Rectangular Pickup (.650") (VW Exc Sharan)	1	00-Up	183010A	N.L.
416D	Rectangular Pickup (1.300") (VW Sharan)	1	00-Up	183010B	N.L.
BANDS					
154A	Reduction	1	99-Up	183026	FP01-19-360
BUSHINGS					
N.I.	Bushing Kit	1	99-Up	183030	N.L.
302C	Pump	1	99-Up	83034A	31405-31X13

ILL.		Qty.	Year	Part #	Ref. #
ELECTRICAL COMPONENTS					
N.I.	**Solenoid Group (VW, Land Rover, Jaguar)**	1	99-Up	183420	K19-40-RP000
N.I.	Solenoid, Shift "A" (VW, Land Rover, Jaguar)	1	99-Up	183421A	31941-PR006
N.I.	Solenoid, Shift "B" (VW, Land Rover, Jaguar)	1	99-Up	183422A	31941-PR000
N.I.	Solenoid, Shift "C" (VW, Land Rover, Jaguar)	1	99-Up	183423A	31941PR005
N.I.	Solenoid, TCC (VW, Land Rover, Jaguar)	1	99-Up	183425A	31941-PR010
N.I.	Solenoid, 2-4 Brake Duty (Oil Pressure) (VW, Land Rover, Jaguar)	1	99-Up	183428A	31941-PR011
N.I.	Solenoid, EPC (Main Pressure) (VW, Land Rover, Jaguar)	1	99-Up	183431A	31941-PR015
N.I.	Solenoid, 2-4 Brake Timing (VW, Land Rover, Jaguar)	1	99-Up	183432A	31941-PR008
N.I.	Solenoid, Reduction Timing (VW, Land Rover, Jaguar)	1	99-Up	183432B	31941-PR014
N.I.	Solenoid, Shift Low Timing (VW, Land Rover, Jaguar)	1	99-Up	183432C	31941-PR007
N.I.	Sensor, Turbine, Input & Output (VW, Land Rover, Jaguar)	3	99-Up	183436	31935-PW000
N.I.	**Solenoid Group (Mazda)**	1	02-Up	183420A	K19-40-RP001
N.I.	Solenoid, Shift "A" (Mazda)	1	02-Up	183421B	31941-PM004
N.I.	Solenoid, Shift "B" (Mazda)	1	02-Up	183422A	31941-PR000
N.I.	Solenoid, Shift "C" (Mazda)	1	02-Up	183423B	31941-PM003
N.I.	Solenoid, TCC (Mazda)	1	02-Up	183425B	31941-PM000
N.I.	Solenoid, Neutral Shift Control (Mazda)	1	02-Up	183430	31941-PM005
N.I.	Solenoid, 2-4 Shift Duty & Duty High Clutch Control (Mazda)	2	02-Up	183430A	31941-PM001
N.I.	Solenoid, EPC (Main Pressure)	1	02-Up	183431A	31941-PR015
N.I.	Solenoid, Reduction Timing (Mazda)	1	02-Up	183432D	31941-PM002
N.I.	Sensor, Turbine, Input & Output (Mazda)	3	02-Up	183436	31935-PW000
PUMPS					
314C	Pump Assembly	1	99-Up	183500	N.L.
PUMP COMPONENTS					
308C	Pump Gears	1	99-Up	183530	N.L.
DRUMS & COMPONENTS					
138A	Drum, Direct (23 Spline) (Land Rover)	1	02-Up	183551	N.L.
138A	Drum, Direct (31 Spline) (Mazda, Jaguar)	1	02-Up	183551A	N.L.
138A	Drum, Direct (31 Spline) (VW)	1	00-Up	183551B	N.L.
418D	Drum, Low	1	99-Up	183554	N.L.
534E	Hub, 2nd/ Reverse (32T / 32T)	1	99-Up	183578	N.L.
540E	Hub, High	1	99-Up	183575	N.L.
562E	High Clutch Balance Retainer (Bonded)	1	99-Up	183985	N.L.
566E	Piston, High Clutch	1	99-Up	183965	FP01-19-2A1
614F	Piston, Reverse Clutch	1	99-Up	183966B	FP03-19-480
616F	Drum, Reverse	1	99-Up	183556	N.L.
N.I.	Piston Kit, Reverse & High Clutch	1	99-Up	183966AK	FP03-19-480
PLANETS & COMPONENTS					
120A	Ring Gear, Reduction (85T) (5.435" OD) (Mazda, Jaguar, VW)	1	99-Up	183596A	N.L.
120A	Ring Gear, Reduction (93T) (5.565" OD) (Land Rover)	1	02-Up	183596	N.L.
122A	Planet, Reduction w/ Shaft (23T Sun Gear) (No Groove) (Land Rover)	1	02-Up	183586	N.L.
122A	Planet, Reduction w/ Shaft (31T Sun Gear) (1 Groove) (VW)	1	00-Up	183586B	N.L.
122A	Planet, Reduction w/ Shaft (31T Sun Gear) (2 Groove) (Mazda, Jaguar)	1	99-Up	183586A	N.L.
440D	Ring Gear, Rear (74T)	1	99-Up	183594	N.L.
446D	Planet, Rear (4 Gear) (Land Rover)	1	02-Up	183584	N.L.
446D	Planet, Rear (5 Gear) (Mazda, Jaguar, VW)	1	99-Up	183584A	N.L.
454D	Planet, Front (3 Gear) (Land Rover)	1	02-Up	183582	N.L.
454D	Planet, Front (4 Gear) (Mazda, Jaguar, VW)	1	99-Up	183582A	N.L.
SUN GEARS					
124A	Sun Gear, Reduction (1 Groove) (VW)	1	00-Up	183616B	N.L.
124A	Sun Gear, Reduction (2 Groove) (Mazda, Jaguar)	1	99-Up	183616A	N.L.
124A	Sun Gear, Reduction (No Groove) (Land Rover)	1	02-Up	183616	N.L.
450D	Sun Gear, Rear (42T)	1	99-Up	183614	N.L.
532E	Sun Gear Hub, Front (34T)	1	99-Up	183612	N.L.
ONE WAY CLUTCHES					
144A	Sprag, Reduction	1	99-Up	183650	N.L.
156A	Race/Support, Direct (2.875" Tall)	1	99-Up	183660	N.L.
332C	Low Roller Clutch	1	99-Up	183654	N.L.

ILL.		Qty.	Year	Part #	Ref. #
SHAFTS					
404D	Shaft, Input (2 Ring) (Land Rover, VW)	1	00-Up	183670	N.L.
404D	Shaft, Input (3 Ring) (Mazda, Jaguar)	1	99-Up	183670A	N.L.
VALVE BODIES & GOVERNORS					
514E	Valve Body (Mazda)	1	02-Up	183740-1	N.L.
514E	Valve Body (VW)	1	00-Up	183740-2	N.L.
514E	Valve Body (Land Rover, Jaguar)	1	99-Up	183740-3	N.L.
DIFFERENTIALS					
214B	Differential Assembly (67T, No Groove) (Land Rover)	1	02-Up	183715	N.L.
214B	Differential Assembly (68T, 4 Grooves) (Jaguar)	1	99-Up	183715C	N.L.
214B	Differential Assembly (68T, 4 Grooves) (Mazda)	1	02-Up	183715A	N.L.
214B	Differential Assembly (69T, No Groove) (VW)	1	00-Up	183715B	N.L.
N.I.	Transfer Gear Kit (41T / 47T) (1 Groove Driven Gear) (Mazda)	1	02-Up	183710BK	N.L.
N.I.	Transfer Gear Kit (52T / 67T) (1 Groove Driven Gear) (VW)	1	00-Up	183710CK	N.L.
N.I.	Transfer Gear Kit (54T / 65T) (2 Groove Driven Gear) (Jaguar)	1	99-Up	183710AK	N.L.
N.I.	Transfer Gear Kit (54T / 65T) (No Groove Driven Gear) (Land Rover)	1	02-Up	183710K	N.L.
N.I.	Ring & Pinion (67T / 22T) (Land Rover)	1	02-Up	183730K	N.L.
N.I.	Ring & Pinion (68T / 21T) (Mazda, Jaguar)	1	99-Up	183730AK	N.L.
N.I.	Ring & Pinion (69T / 20T) (VW)	1	00-Up	183730BK	N.L.
CASES/HOUSINGS & COMPONENTS					
100A	Bell Housing (Land Rover)	1	02-Up	183750	N.L.
100A	Bell Housing (VW)	1	00-Up	183750B	N.L.
100A	Bell Housing (Mazda)	1	02-Up	183750A	N.L.
100A	Bell Housing (Jaguar)	1	99-Up	183750C	N.L.
322C	Case (21 Bolt) (No Top Vent) (VW)	1	00-Up	183760B	N.L.
322C	Case (21 Bolt) (Top Vent) (Land Rover)	1	02-Up	183760	N.L.
322C	Case (22 Bolt) (Top Vent) (Mazda)	1	02-Up	183760A	N.L.
322C	Case (23 Bolt) (No Top Vent) (Jaguar)	1	99-Up	183760C	N.L.
602F	Pan, Side (2 Stud) (Land Rover)	1	02-Up	183766	N.L.
602F	Pan, Side (3 Stud) (Jaguar)	1	99-Up	183766C	N.L.
602F	Pan, Side (4 Stud) (VW)	1	00 -Up	183766B	N.L.
602F	Pan, Side (No Stud) (Mazda)	1	02-Up	183766A	N.L.
638F	Cover, Rear (Land Rover, Mazda, Jaguar)	1	99-Up	183759	N.L.
638F	Cover, Rear (VW)	1	00-Up	183759A	N.L.
MISCELLANEOUS COMPONENTS					
222B	Cover, Servo (Land Rover, Mazda, Jaguar)	1	99-Up	183909	N.L.
232B	Servo Piston, Reduction (Land Rover)	1	02-Up	183905	N.L.
232B	Servo Piston, Reduction (Mazda, Jaguar)	1	99-Up	183905A	N.L.
232B	Servo Piston, Reduction (VW)	1	00-Up	183905B	N.L.
TECHNICAL MANUALS					
N.I.	Tech Manual (ATSG)	1	99-Up	183400	N.L.
N.I.	Tech Manual (Update) (Green Book) (ATSG)	1	99-Up	183400C	N.L.
N.I.	Rebuild Procedures (ATRA)	1	99-Up	183400A	N.L.

Notes

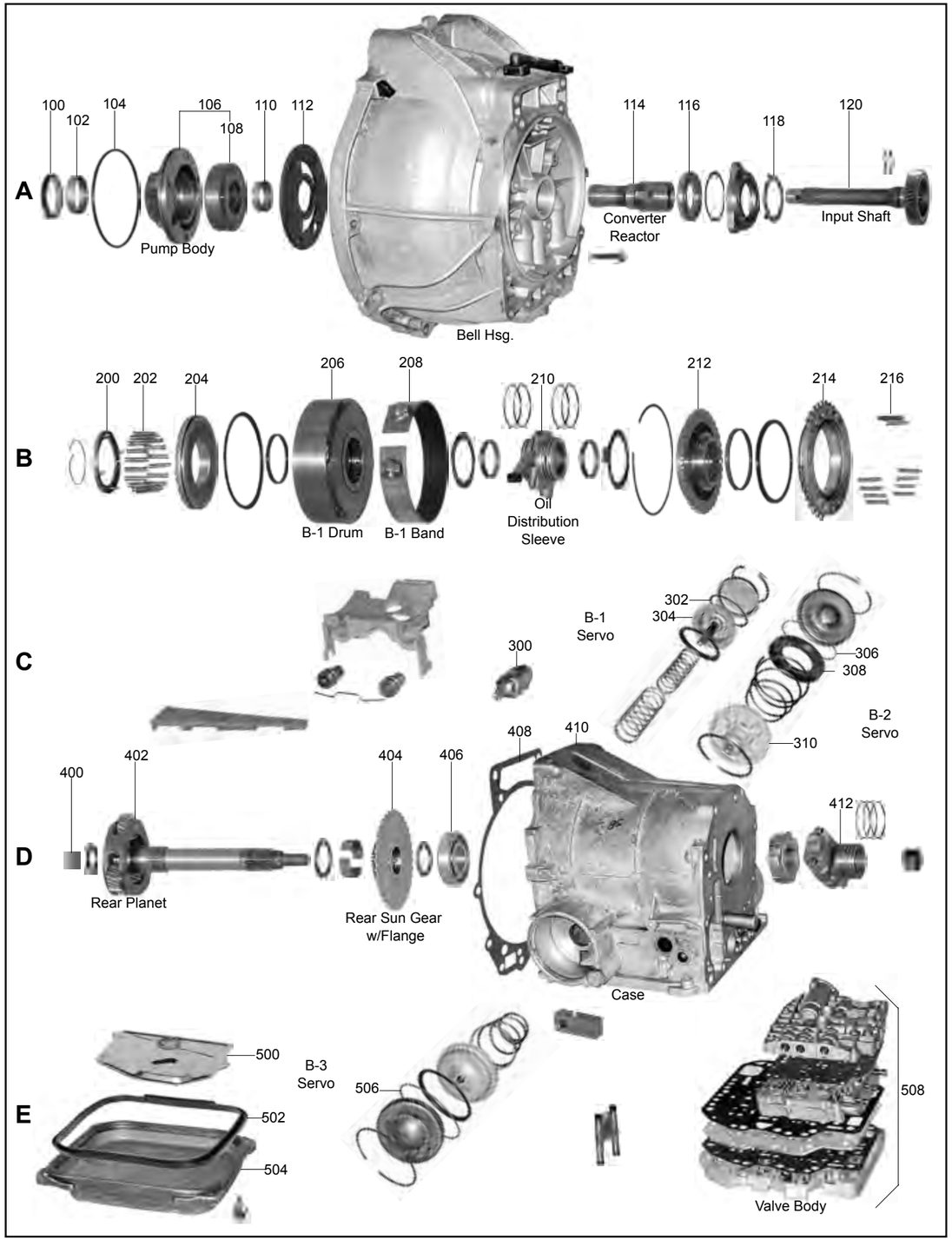
A
100
102
104
106
108
110
112
Pump Body
Bell Hsg.
114
116
Converter
Reactor
118
120
Input Shaft
B
200
202
204
206
B-1 Drum
208
B-1 Band
210
Oil
Distribution
Sleeve
212
214
216
C
B-1
Servo
300
302
304
306
308
B-2
Servo
310
D
400
402
Rear Planet
404
406
Rear Sun Gear
w/Flange
408
410
Case
412
E
500
502
504
B-3
Servo
506
508
Valve Body

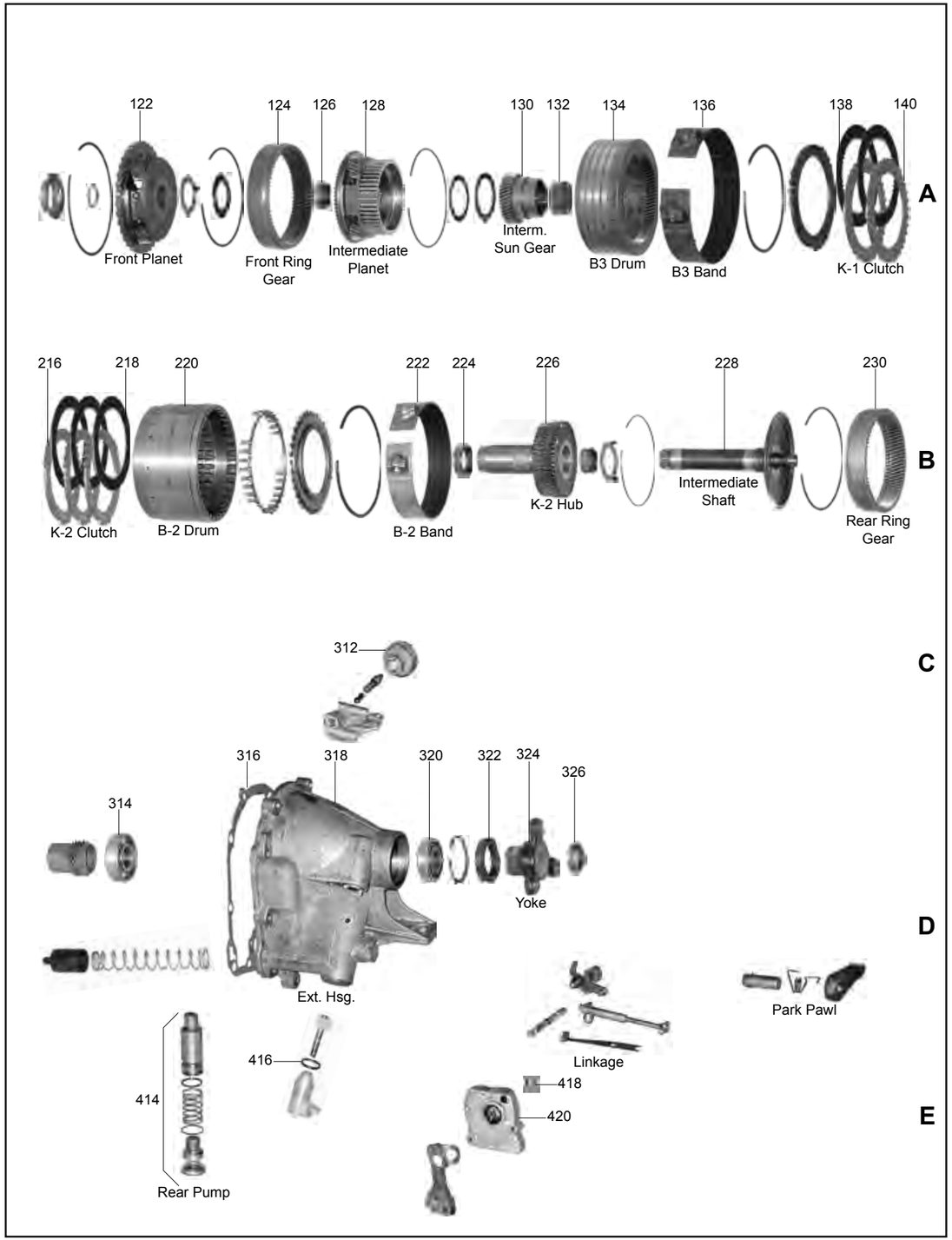
A
122
Front Planet
124
126
Front Ring
Gear
128
Intermediate
Planet
130
132
Interm.
Sun Gear
134
B3 Drum
136
B3 Band
138
140
K-1 Clutch
B
216
K-2 Clutch
218
220
B-2 Drum
222
224
B-2 Band
226
K-2 Hub
228
Intermediate
Shaft
230
Rear Ring
Gear
C
312
314
316
318
320
322
324
326
Yoke
D
Ext. Hsg.
Park Pawl
Linkage
414
Rear Pump
416
418
420
E

ILL.		Qty.	Year	Part #	Ref. #
MASTER OVERHAUL KITS (WITH STEELS)					
N.I.	722.0/722.1/722.2	1	70-83	58006	N.L.
MASTER OVERHAUL KITS (LESS STEELS)					
N.I.	722.0/722.1/722.2	1	70-83	58004	N.L.
OVERHAUL KITS (WITH RINGS AND SEALS)					
N.I.	722.0/722.1/722.2	1	70-83	58002	N.L.
GASKETS & O-RINGS					
502E	Pan	1	70-83	58300	115-271-1680
METAL CLAD SEALS					
100A	Front 722.1 (1 1/16" OD Converter Hub)	1	70-83	58070	008-997-2546
100A	Front 722.0/722.2 (1 5/8" OD Converter Hub)	1	70-83	58070A	004-997-0547
322C	Extension Housing 722.0/722.1/722.2	1	70-83	58074	005-997-1146
FRICTION PLATES					
138A	K1 & K2 Clutch (.083) 51T	8	70-83	58104	N.L.
138A	K1 & K2 Clutch (.098) 51T	8	70-83	58104A	N.L.
STEEL PLATES					
140A	K1 & K2 Clutch (2.0mm) (.079) 12T	AR	70-83	58124	109-272-1526
FILTERS					
500E	722.0/722.1/722.2 Without Tube	1	70-77	58010	115-270-0398
FILTER KITS					
N.I.	722.0/722.1/722.2 Without Tube	1	70-77	58011	N.L.
BUSHINGS					
102A	Pump 722.1 (1 1/16" OD Converter Hub)	1	70-83	58034	N.L.
102A	Pump 722.0/722.2 (1 5/8" OD Converter Hub)	1	70-83	58034B	112-272-4350
MISCELLANEOUS COMPONENTS					
312C	Modulator, Steel/Plastic (Snap Ring Type)	1	77-81	56160C	N.L.
TECHNICAL MANUALS					
N.I.	722.0/722.1/722.2	1	70-83	58400	N.L.

Notes

Notes

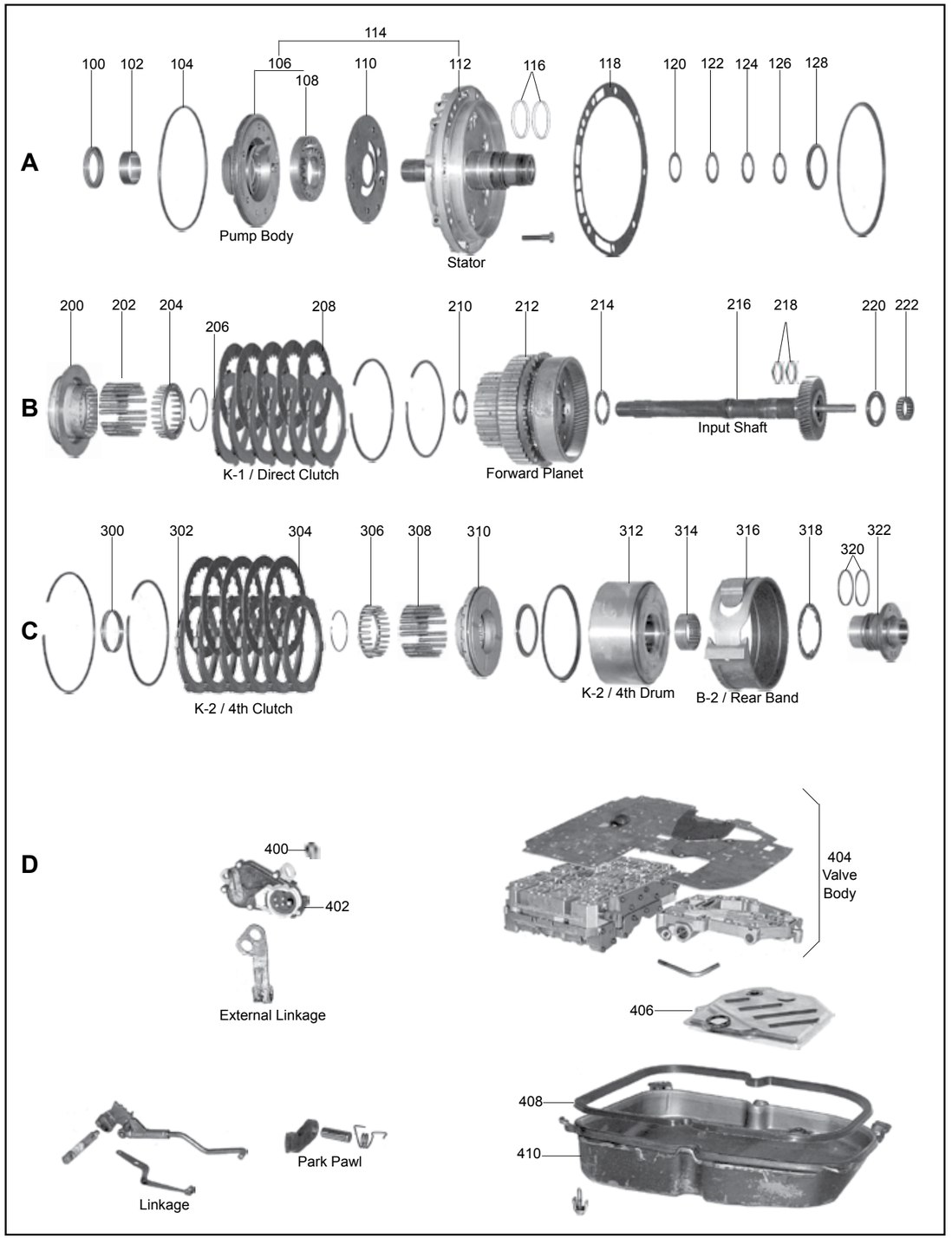
A
100 102 104 106 108 110 112 114 116 118 120 122 124 126 128
Pump Body
Stator
B
200 202 204 206 208 210 212 214 216 218 220 222
K-1 / Direct Clutch
Forward Planet
Input Shaft
C
300 302 304 306 308 310 312 314 316 318 320 322
K-2 / 4th Clutch
K-2 / 4th Drum
B-2 / Rear Band
D
400
402
External Linkage
404
Valve
Body
406
408
410
Linkage
Park Pawl

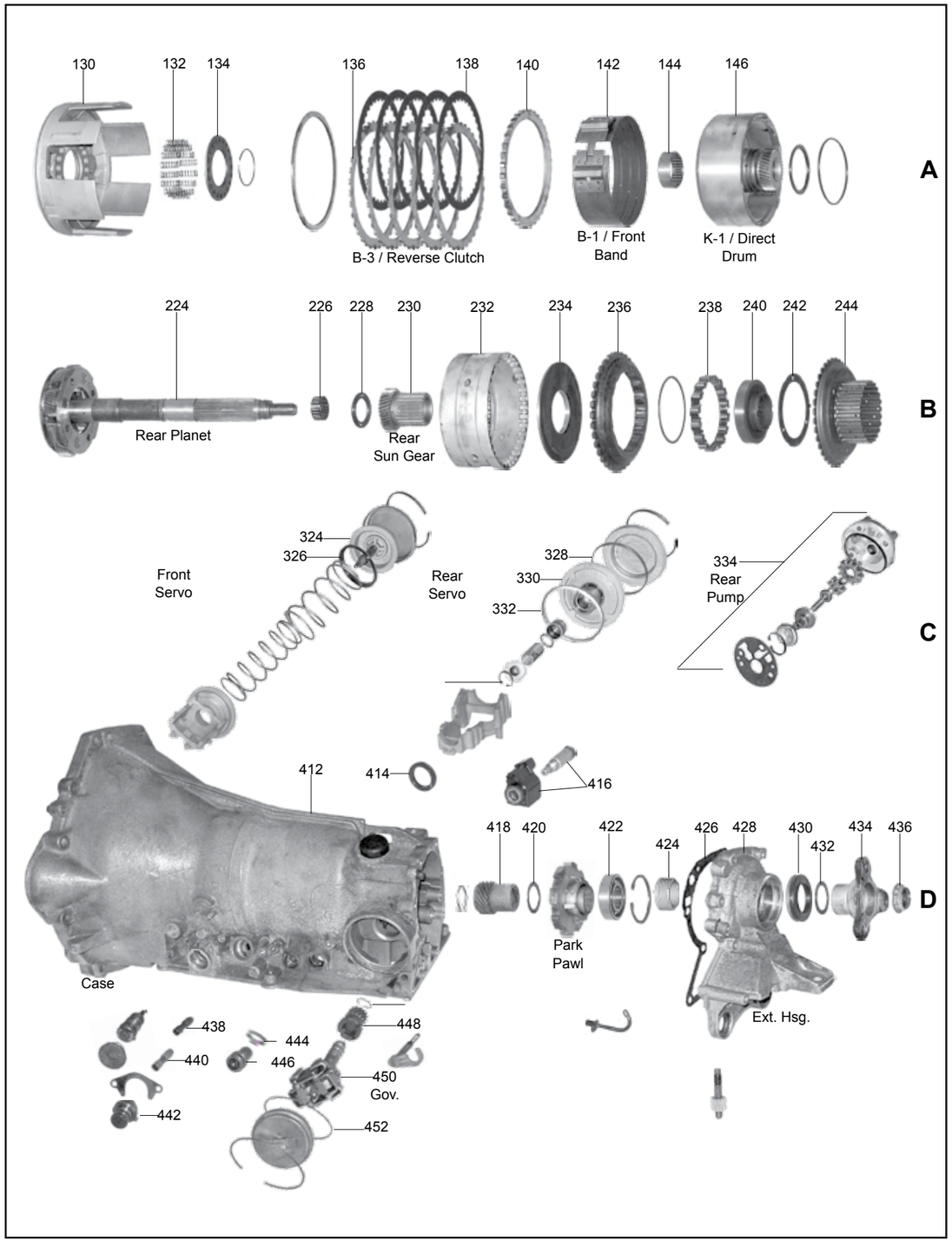
A
130 132 134 136 138 140 142 144 146
B-3 / Reverse Clutch
B-1 / Front
Band
K-1 / Direct
Drum
B
224 226 228 230 232 234 236 238 240 242 244
Rear Planet
Rear
Sun Gear
C
324
326
Front
Servo
328
330
332
Rear
Servo
334
Rear
Pump
412
414
416
Case
D
418 420 422 424 426 428 430 432 434 436
Park
Pawl
Ext. Hsg.
438
440
442
444
446
448
450
Gov.
452

ILL.		Qty.	Year	Part #	Ref. #
MASTER OVERHAUL KITS (WITH STEELS)					
N.I.	722.3 (380 Series) (W4A040)	1	81-95	68006B	N.L.
N.I.	722.4 (190 Series) (W4A020)	1	84-95	68006A	N.L.
N.I.	722.5	1	90-95	68006C	N.L.
MASTER OVERHAUL KITS (LESS STEELS)					
N.I.	722.3 (380 Series) (W4A040)	1	81-95	68004B	N.L.
N.I.	722.4 (190 Series) (W4A020)	1	84-95	68004A	N.L.
N.I.	722.5	1	90-95	68004C	N.L.
OVERHAUL KITS (WITH RINGS AND SEALS)					
N.I.	722.3 (380 Series) (W4A040)	1	81-95	68002B	N.L.
N.I.	722.4 (190 Series) (W4A020)	1	84-95	68002A	N.L.
N.I.	722.5	1	90-95	68002C	N.L.
GASKETS & O-RINGS					
104A	O-Ring, Pump (722.3, 722.5)	1	81-95	68311B	016-997-1448
118A	Gasket, Pump (722.3)	1	81-95	68310B	N.L.
408D	Gasket, Bottom Pan (722.3, 722.5)	1	81-95	68300B	126-271-0280
408D	Gasket, Bottom Pan (722.4)	1	84-95	68300A	123-271-0280
N.I.	Gasket, Valve Body (722.3) (126-277-14-80)	1	81-95	68320B	126-277-1480
N.I.	Gasket, Valve Body (722.3) (126-277-10-80)	1	82-95	68320BA	126-277-1080
N.I.	Gasket, Valve Body (722.4) (201-277-02-80) 190 Series - 400/403 Early	1	84-85	68320A	201-277-0280
N.I.	Gasket, Valve Body (722.4) (201-277-00-80) 190 Series	1	84-95	68320AA	201-277-0080
N.I.	Gasket, Valve Body (722.4) (124-277-04-80) 190 Series	1	87-95	68320AB	124-277-0480
METAL CLAD SEALS					
100A	Front (722.3, 722.5)	1	81-95	68070B	004-997-2847
100A	Front (722.4)	1	84-95	68070A	010-997-4547
400D	Shift Lever Shaft	1	81-95	68072B	006-997-0147
430D	Rear	1	81-95	68074A	012-997-8747
N.I.	Speedo Gear	1	81-95	68078	008-997-9047
SEALING RINGS & KITS					
N.I.	Ring Kit, Accumulator Rings Only (722.3, 722.4, 722.5)	1	81-95	68175BK	126-270-0635
FRICTION PLATES					
138A	B3 (Reverse) (30T) (722.3, 722.5)	4-5	83-95	68110B	126-272-0925
138A	B3 (Reverse) (30T) (722.4)	3-5	83-95	68110A	201-272-0025
208B	K1 (Front) (24T) (722.3, 722.5)	4-5	81-95	68106B	126-272-0625
208B	K1 (Front) (40T) (722.4)	3-5	83-95	68106A	123-272-0225
304C	K2 (Rear) (24T) (722.3, 722.5)	4-5	81-95	68100B	126-272-0725
304C	K2 (Rear) (36T) (722.4)	3-5	83-95	68100A	123-272-0125
N.I.	BS (Overdrive) (28T) (722.5)	4	91-95	68102C	124-272-0025
N.I.	KS (Overrun) (22T) (722.5)	4	91-95	68116C	124-272-0125
STEEL PLATES					
136A	B3 (Reverse) (2.3mm) (722.3, 722.5)	AR	81-95	68130B	126-272-6726
136A	B3 (Reverse) (2.8mm) (722.3, 722.5)	AR	81-95	68130BA	126-272-6826
136A	B3 (Reverse) (2.5mm) (722.4)	AR	84-95	68130	201-272-2526
136A	B3 (Reverse) (3.0mm) (722.4)	AR	84-95	68130A	201-272-2126
206B	K1 (Front) (2.0mm) (722.3, 722.5)	AR	81-95	68120B	126-272-4926
206B	K1 (Front) (3.5mm) (722.3, 722.5)	AR	81-95	68120BA	126-272-5026
206B	K1 (Front) (2.0mm) (722.4)	AR	84-95	68120AA	201-272-0726
206B	K1 (Front) (3.0mm) (722.4)	AR	84-95	68120A	201-272-0826
302C	K2 (Rear) (2.0mm) (722.3, 722.5)	AR	81-95	68126BA	126-272-4826
302C	K2 (Rear) (3.0mm) (722.3, 722.5)	AR	81-95	68126B	126-272-0926
302C	K2 (Rear) (2.0mm) (722.4)	AR	84-95	68126AB	201-272-0126
302C	K2 (Rear) (3.5mm) (722.4)	AR	84-95	68126A	201-272-0326
N.I.	BS (Overdrive) (2.5mm) (722.5)	AR	90-95	68122C	129-272-0126
N.I.	KS (Overrun) (2.0mm) (722.5)	AR	91-95	68136C	124-272-0226
FILTERS					
406D	722.3, 722.4	1	81-95	68010A	126-277-0295
406D	722.5 (w/Baffle)	1	90-95	68010C	129-277-0195

ILL.		Qty.	Year	Part #	Ref. #
FILTER KITS					
N.I.	722.3	1	81-95	68011B	N.L.
N.I.	722.4	1	84-95	68011A	N.L.
N.I.	722.5	1	90-95	68011C	N.L.
BANDS					
142A	Front Semi Flex (722.3, 722.5)	1	81-95	68022B	126-270-1862
142A	Front Semi Flex (722.4)	1	84-95	68022A	124-270-0062
316C	Rear (Split) (722.3, 722.5)	1	81-95	68026B	126-270-2062
316C	Rear (Split) (722.4)	1	84-95	68026A	201-270-1062
BUSHINGS					
102A	Pump Body (722.3, 722.5)	1	81-95	68034B	N.L.
102A	Pump Body (722.4)	1	81-95	68034A	N.L.
VALVE BODY RECALIBRATION KITS					
N.I.	Valve Body Kit (Diesel) (722.3, 722.4)	1	81-90	68165D	N.L.
N.I.	Valve Body Kit (Gas) (722.3, 722.4)	1	81-95	68165G	N.L.
MISCELLANEOUS COMPONENTS					
442D	Modulator, Black Top (Push In)	1	81-95	68160AE	126-270-4379
442D	Modulator, Brown Top (Push In)	1	81-95	68160AD	126-270-2779
442D	Modulator, Green Top (Push In)	1	81-95	68160AC	126-270-2679
442D	Modulator, Red Top (Push In)	1	81-95	68160AB	126-270-2579
450D	Governor (722.3)	1	81-95	68680B	N.L.
450D	Governor (722.4)	1	84-95	68680A	N.L.
N.I.	Stator Shaft	1	84-95	68529A	N.L.
N.I.	Clutch Drum Repair Kit (4th Clutch) (K-2) (722.3)	1	81-95	68550BK	N.L.
TECHNICAL MANUALS					
N.I.	Tech Manual (722.3, 722.4)	1	81-95	68400A	N.L.
N.I.	Tech Manual (722.5)	1	90-95	68400C	N.L.

Notes

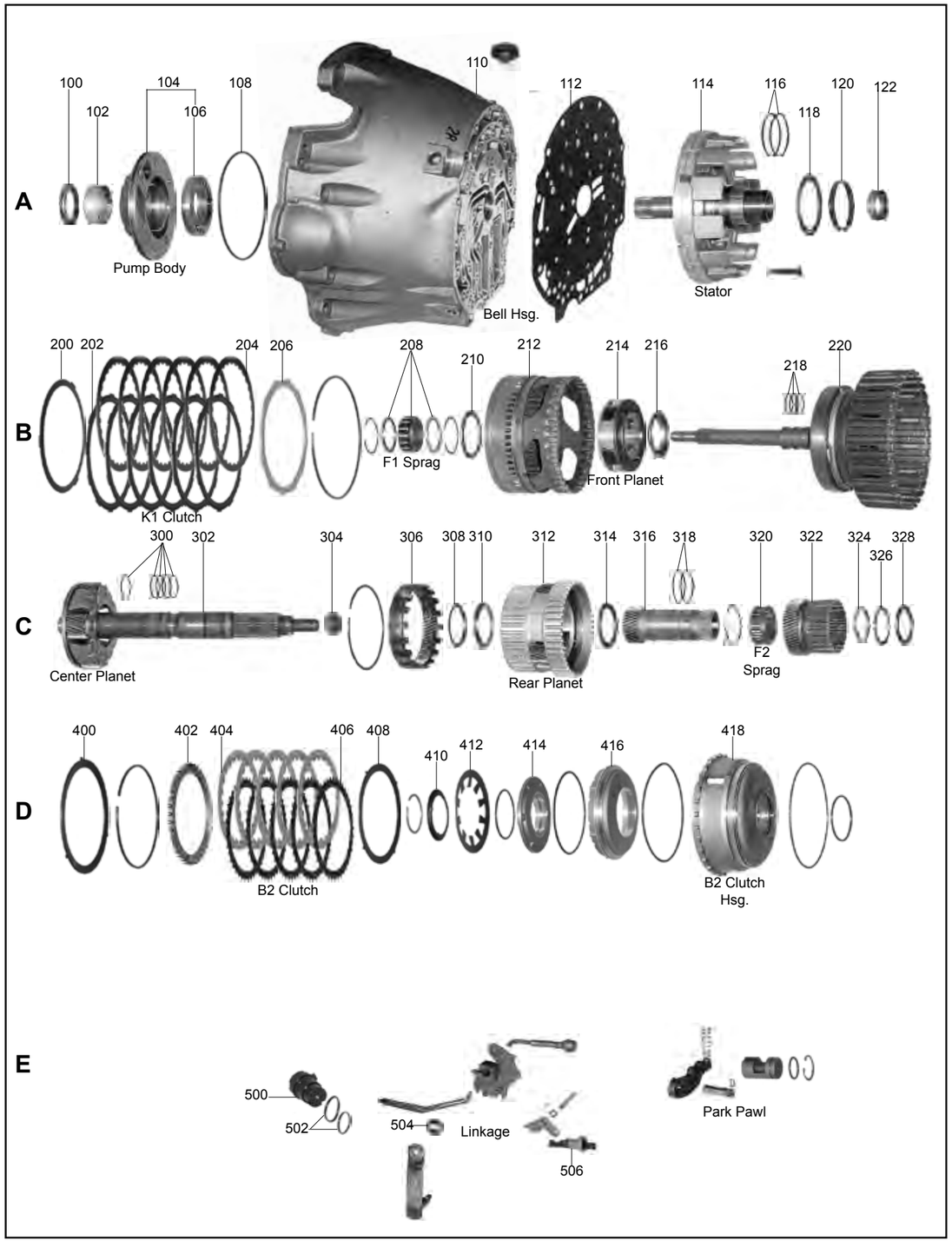
A
100
102
104
106
108
Pump Body
110
Bell Hsg.
112
114
116
118
120
122
Stator
B
200
202
204
K1 Clutch
206
208
F1 Sprag
210
212
214
Front Planet
216
218
220
C
300
302
Center Planet
304
306
308
310
312
Rear Planet
314
316
318
320
F2
Sprag
322
324
326
328
D
400
402
404
B2 Clutch
406
408
410
412
414
416
418
B2 Clutch
Hsg.
E
500
502
504
Linkage
506
Park Pawl

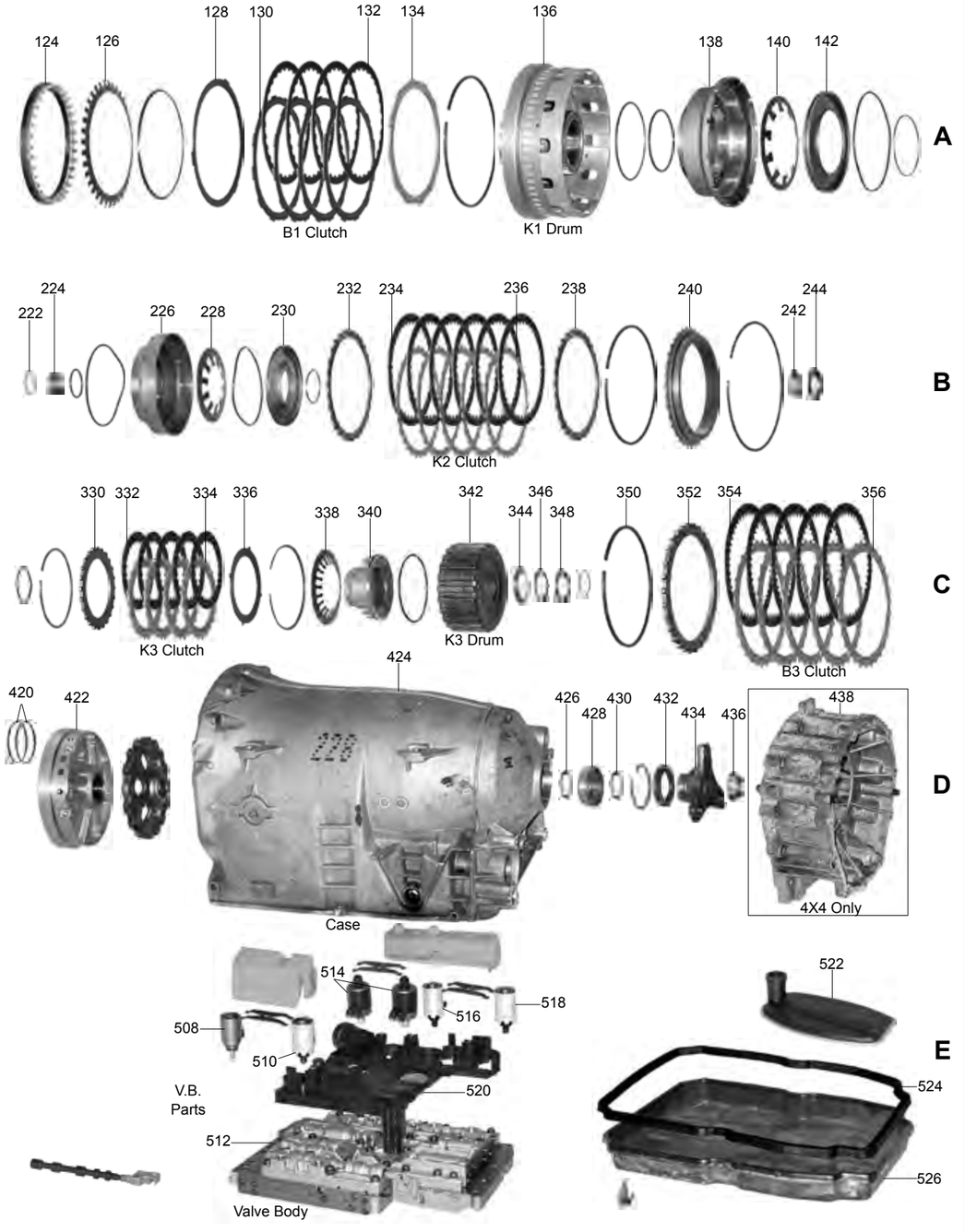
A
124
126
128
130
B1 Clutch
132
134
136
K1 Drum
138
140
142
B
222
224
226
228
230
K2 Clutch
232
234
236
238
240
242
244
C
330
332
334
336
K3 Clutch
338
340
342
K3 Drum
344
346
348
350
352
354
B3 Clutch
356
D
420
422
424
Case
426
428
430
432
434
436
4X4 Only
438
E
508
510
V.B.
Parts
512
514
516
518
520
Valve Body
522
524
526

ILL.		Qty.	Year	Part #	Ref. #
MASTER OVERHAUL KITS (WITH STEELS)					
N.I.	w/ Pistons (Double Sided B1, K1, K3 Frictions) (5.25" ID K2 Frictions)	1	96-Up	78006	N.L.
N.I.	w/ Pistons (Double Sided B1, K1, K3 Frictions) (5.45" ID K2 Frictions)	1	96-Up	78006A	N.L.
N.I.	w/ Pistons (All Single Sided Frictions) (5.25" ID K2 Frictions)	1	02-Up	78006C	N.L.
N.I.	w/ Pistons (All Single Sided Frictions) (5.45" ID K2 Frictions)	1	02-Up	78006D	N.L.
MASTER OVERHAUL KITS (LESS STEELS)					
N.I.	w/ Pistons (Double Sided B1, K1, K3 Frictions) (5.25" ID K2 Frictions)	1	96-Up	78004	N.L.
N.I.	w/ Pistons (Double Sided B1, K1, K3 Frictions) (5.45" ID K2 Frictions)	1	96-Up	78004A	N.L.
N.I.	w/ Pistons (All Single Sided Frictions) (5.25" ID K2 Frictions)	1	02-Up	78004C	N.L.
N.I.	w/ Pistons (All Single Sided Frictions) (5.45" ID K2 Frictions)	1	02-Up	78004D	N.L.
OVERHAUL KITS (WITH RINGS AND SEALS)					
N.I.	722.6 (w/o Pistons)	1	96-Up	78002	140-270-6500
BONDED PISTONS					
124A	Piston, B1 (.700" Tall) (Bonded)	1	96-01	78967	140-272-1631
124A	Piston, B1 (.880" Tall) (Bonded)	1	02-Up	78967A	220-272-0331
GASKETS & O-RINGS					
108A	O-Ring, Pump	1	96-Up	68311B	016-997-1448
524E	Bottom Pan (Molded Rubber)	1	96-Up	78300A	140-271-0080
N.I.	Seal, Filler Tube	1	96-Up	72371	4810021AB
METAL CLAD SEALS					
100A	Front Pump	1	96-Up	68070B	004-997-2847
432D	Rear (2wd)	1	96-Up	78074	N.L.
432D	Rear (4wd)	1	96-Up	78074A	210-997-0746
FRICTION PLATES					
130A	B1 Clutch (One Sided Friction w/ External Teeth)	2-4	02-Up	78134C	N.L.
132A	B1 Clutch (Two Sided Friction)	2-4	96-Up	78114	140-272-0025
132A	B1 Clutch (One Sided Friction w/ Internal Teeth)	2-4	02-Up	78114C	N.L.
202B	K1 Clutch (One Sided Friction w/ External Teeth)	3-6	02-Up	78134C	N.L.
204B	K1 Clutch	3-6	96-Up	78114	140-272-0025
204B	K1 Clutch (One Sided Friction w/ Internal Teeth)	3-6	02-Up	78114C	N.L.
234B	K2 Clutch (5.25" ID) (Measure Tip of Tooth to Tip of Tooth)	3-4	96-Up	78108	210-272-0025
234B	K2 Clutch (5.45" ID) (Measure Tip of Tooth to Tip of Tooth)	5-6	96-Up	78108A	140-272-0125
332C	K3 Clutch (.085")	4-5	96-Up	78102	140-272-0725
332C	K3 Clutch (One Sided Friction w/ Internal Teeth)	4-5	02-Up	78102B	N.L.
334C	K3 Clutch (One Sided Friction w/ External Teeth)	4-5	02-Up	78122B	N.L.
354C	B3 Clutch	3-5	96-Up	78110	140-272-0626
406D	B2 Clutch (External Teeth)	4-5	96-Up	78112	140-272-0026
STEEL PLATES					
130A	B1 Clutch (.071")	1	96-Up	78134	140-272-0226
130A	B1 Clutch (.110")	3-5	96-Up	78134B	140-272-2826
130A	B1 Clutch (.138")	2-3	96-Up	78134A	140-272-0326
202B	K1 Clutch (.071")	1	96-Up	78134	140-272-0226
202B	K1 Clutch (.110")	3-5	96-Up	78134B	140-272-2826
202B	K1 Clutch (.138")	3-5	96-Up	78134A	140-272-0326
236B	K2 Clutch (.071")	1	96-Up	78128	140-272-0626
236B	K2 Clutch (.110")	2-5	96-Up	78128B	140-272-2926
236B	K2 Clutch (.138")	2-5	96-Up	78128A	140-272-0726
334C	K3 Clutch (.071")	1	96-Up	78122	140-272-1026
334C	K3 Clutch (.110")	3-4	96-Up	78122A	140-272-2726
334C	K3 Clutch (.138")	3-4	96-97	78122C	140-272-1126
356C	B3 Clutch	3-5	96-Up	78130	140-272-1826
404D	B2 Clutch (Internal Teeth)	3-4	96-Up	78132	140-272-0425
PRESSURE PLATES					
134A	B1 (12T) (.156")	1	96-Up	78154	N.L.
206B	K1 (12T) (.156")	1	96-Up	78154	N.L.
352C	B3 (.255")	1	96-Up	78150	N.L.
402D	B2 (40T) (.255")	1	96-Up	78152	N.L.

ILL.		Qty.	Year	Part #	Ref. #
FILTERS					
522E	Filter	1	96-Up	78010A	140-277-0095
FILTER KITS					
N.I.	Filter Kit	1	96-Up	78011A	N.L.
BUSHINGS					
102A	Front Pump Body	1	96-Up	78034	68004-01
122A	Stator (Rear)	1	96-Up	78037	68915-01
224B	Input Shaft	1	96-Up	78047	68410-01
THRUST WASHERS/BEARINGS					
BEARINGS					
N.I.	Bearing, Input Shaft w/ Sealing Ring	1	96-Up	78211K	68410-02K
ELECTRICAL COMPONENTS					
508E	Solenoid, Lock-Up (TCC) / PWM (140-277-04-35 Marking)	1	96-Up	78425	140-277-0435
510E	Solenoid, Shift (140-277-05-35 Marking)	3	96-Up	78421	140-277-0535
514E	Solenoid, Line & Shift Pressure (140-277-03-98 Marking)	2	96-Up	78431	140-277-0398
520E	Solenoid Connector Plate (Round Dip Stick Guide)	1	96-Up	78444	68049181AA
520E	Solenoid Connector Plate (U-Shaped Dip Stick Guide)	1	05-Up	78444A	52108308AC
N.I.	Case Connector to Harness Sleeve	1	96-Up	78444B	05120265AA
N.I.	Case Connector to Connector Plate	1	96-Up	78444C	203-540-0253
VALVE BODY COMPONENTS					
N.I.	Kit, Overlap Control Sleeves	1	96-Up	78741DK	N.L.
N.I.	Spring, Pressure Regulator (Does not fit 00-Up)	1	96-99	78741P-3	N.L.
N.I.	Overlap Control Sleeve Kit	1	96-Up	78741DK	N.L.
N.I.	Lube Pressure Control Valve Kit (req T-F-68942-TL14 & T-VB-FIX)	1	96-Up	78741P-1K	N.L.
N.I.	Lube Pressure Regulator Repair Kit	1	96-Up	78741HRK	N.L.
N.I.	Valves (Refill for 78741HRK)	1	96-Up	78741HRF	N.L.
PUMPS					
104A	Pump Body w/ Gears	1	96-Up	78510	05080070AB
PUMP COMPONENTS					
112A	Plate, Pump	1	96-Up	78544	140-277-4214
114A	Stator (2 Double Sided Clutches) (Mercedes)	1	96-Up	78520	N.L.
114A	Stator (3 Double Sided Clutches) (Mercedes)	1	96-Up	78520A	N.L.
114A	Stator (4 Double Sided Clutches) (Mercedes)	1	96-Up	78520B	N.L.
114A	Stator (3 Single Sided Clutches) (Chrysler)	1	04-Up	78520C	52108539AC
DRUMS & COMPONENTS					
124A	Piston, B1 (.700" Tall) (Bonded)	1	96-01	78967	140-272-1631
124A	Piston, B1 (.880" Tall) (Bonded)	1	02-Up	78967A	220-272-0331
136A	K1 (3 Clutch)	1	96-Up	78555	N.L.
136A	K1 (5 Clutch) (Exc Sprinter)	1	04-Up	78555A	52108510AC
136A	K1 (5 Clutch) (Sprinter Only)	1	03-Up	78555C	52108510AA
220B	K2 (78T Ring Gear) (Bushing Type)	1	96-Up	78554B	N.L.
220B	K2 (78T Ring Gear) (Caged Needle Bearing Type)	1	04-Up	78554C	52108044AA
220B	K2 (90T Ring Gear) (Bushing Type)	1	96-Up	78554	N.L.
220B	K2 (90T Ring Gear) (Caged Needle Bearing Type)	1	96-Up	78554A	N.L.
342C	K3 (3 Clutch)	1	96-Up	78551	N.L.
342C	K3 (4 Clutch) (Exc Magnum)	1	04-Up	78551A	52108548AA
342C	K3 (4 Clutch) (Magnum Only)	1	04-Up	78551B	52108548AB
418D	B2 (3.200" Thick) (Cast 2102721931)	1	04-Up	78552A	52108395AA
418D	B2 (3.500" Thick) (Cast 2022720431)	1	96-Up	78552	N.L.
PLANETS & COMPONENTS					
214B	Planet, Front (3 Gear) (Mercedes)	1	96-Up	78582	N.L.
214B	Planet, Front (4 Gear) (Chrysler)	1	04-Up	78582A	52108513AA
240B	Ring Gear, Rear (87T) (Mercedes)	1	96-Up	78594	N.L.
240B	Ring Gear, Rear (90T) (Mercedes)	1	96-Up	78594A	N.L.
240B	Ring Gear, Rear (108T) (Mercedes)	1	04-Up	78594B	52107922AA
240B	Ring Gear, Rear (103T) (Chrysler)	1	04-Up	78594C	52107922AA
302C	Planet w/ Shaft, Center (34T Sprag) (Mercedes)	1	96-Up	78580	N.L.

ILL.		Qty.	Year	Part #	Ref. #
PLANETS & COMPONENTS (Cont.)					
302C	Planet w/ Shaft, Center (30T Sprag) (Chrysler)	1	04-Up	78580A	52107929AA
306C	Ring Gear, Center (69T) (Mercedes)	1	96-Up	78590	N.L.
306C	Ring Gear, Center (74T) (Chrysler)	1	04-Up	78590A	52108379AA
312C	Planet, Rear (3 Gear) (54T Sun Gear Type) (4.025" Tall) (Mercedes)	1	96-Up	78584B	N.L.
312C	Planet, Rear (3 Gear) (60T Sun Gear Type) (4.290" Tall) (Mercedes)	1	96-Up	78584C	N.L.
312C	Planet, Rear (3 Gear) (65T Sun Gear Type) (4.025" Tall) (Mercedes)	1	96-Up	78584D	N.L.
312C	Planet, Rear (4 Gear) (60T Sun Gear Type) (Chrysler)	1	04-Up	78584A	52108513AA
N.I.	Geartrain (30T / 50T Sun Gears) (Mercedes)	1	96-Up	78583	N.L.
N.I.	Geartrain (34T / 54T Sun Gears) (Mercedes)	1	96-Up	78583A	N.L.
N.I.	Geartrain (30T / 60T Sun Gears) (Chrysler)	1	04-Up	78583B	N.L.
N.I.	Geartrain (34T / 65T Sun Gears) (Chrysler)	1	04-Up	78583C	N.L.
SUN GEARS					
316C	Sun Gear, Center (34T) (Mercedes)	1	96-Up	78610	N.L.
316C	Sun Gear, Center (30T) (Chrysler)	1	04-Up	78610A	52108078AA
322C	Sun Gear, Rear (54T) (Mercedes)	1	96-Up	78614	N.L.
322C	Sun Gear, Rear (50T) (Mercedes)	1	96-Up	78614A	N.L.
322C	Sun Gear, Rear (30T) (Mercedes)	1	96-Up	78614D	N.L.
322C	Sun Gear, Rear (60T) (Chrysler exc Dodge Magnum)	1	04-Up	78614B	52108519AA
322C	Sun Gear, Rear (65T) (Dodge Magnum)	1	04-Up	78614C	N.L.
ONE WAY CLUTCHES					
208B	Sprag, Front (F1) (2 End Caps, 21.46mm ID)	1	96-Up	78658	210-270-0031
208B	Sprag, Front (F1) (2 End Caps, 23.46mm ID)	1	06-Up	78658A	N.L.
320C	Sprag, Rear (F2) (1 End Cap, 20 Element)	1	96-Up	78654A	220-270-0131
SHELLS & SUPPORTS					
422D	Support, B2 / Rear	1	96-Up	78634	52108182AA
VALVE BODIES & GOVERNORS					
512E	Valve Body Stamped 0006 (Jaguar)	1	98-Up	78740-1	N.L.
512E	Valve Body Stamped 0206	1	96-97	78740-2	N.L.
512E	Valve Body Stamped 0506	1	96-97	78740-3	N.L.
512E	Valve Body Stamped 0406	1	96-00	78740-4	N.L.
512E	Valve Body Stamped 0606	1	00-Up	78740-5	N.L.
512E	Valve Body (NAG1 Chrysler Only)	1	03-Up	78740-6	N.L.
512E	Valve Body (Cast 52108216AA)	1	04-Up	78740-7	52108213AB
512E	Valve Body (Sprinter Only)	1	03-Up	78740-8	05080262AA
CASES/HOUSINGS & COMPONENTS					
526E	Pan (w/ Plug) (Mercedes)	1	96-Up	78765	N.L.
526E	Pan (w/o Plug) (Chrysler)	1	04-Up	78765A	52108327AA
526E	Pan (Sprinter)	1	03-Up	78765B	52108326AA
MISCELLANEOUS COMPONENTS					
400D	Cushion, B3 (3T)	1	96-Up	78854	N.L.
408D	Cushion, B2 (4T)	1	96-Up	78856	N.L.
TECHNICAL MANUALS					
N.I.	Technical Manual & Video (Updates & Diagnostics) (ATSG)	1	96-Up	78400	N.L.
N.I.	Rebuild Procedures (ATSG)	1	96-Up	78400A	N.L.
TOOLS					
N.I.	Dipstick Fluid Measuring Tool (Chrysler C Class, LX, WK, Jeeps w/ NAG1)	1	96-Up	T-9336A	N.L.
N.I.	Dipstick Fluid Measuring Tool (Chrysler Sprinter & Crossfire)	1	96-Up	T-9336B	N.L.
N.I.	Dipstick Fluid Measuring Tool (Mercedes)	1	96-Up	T-9336C	N.L.

Notes

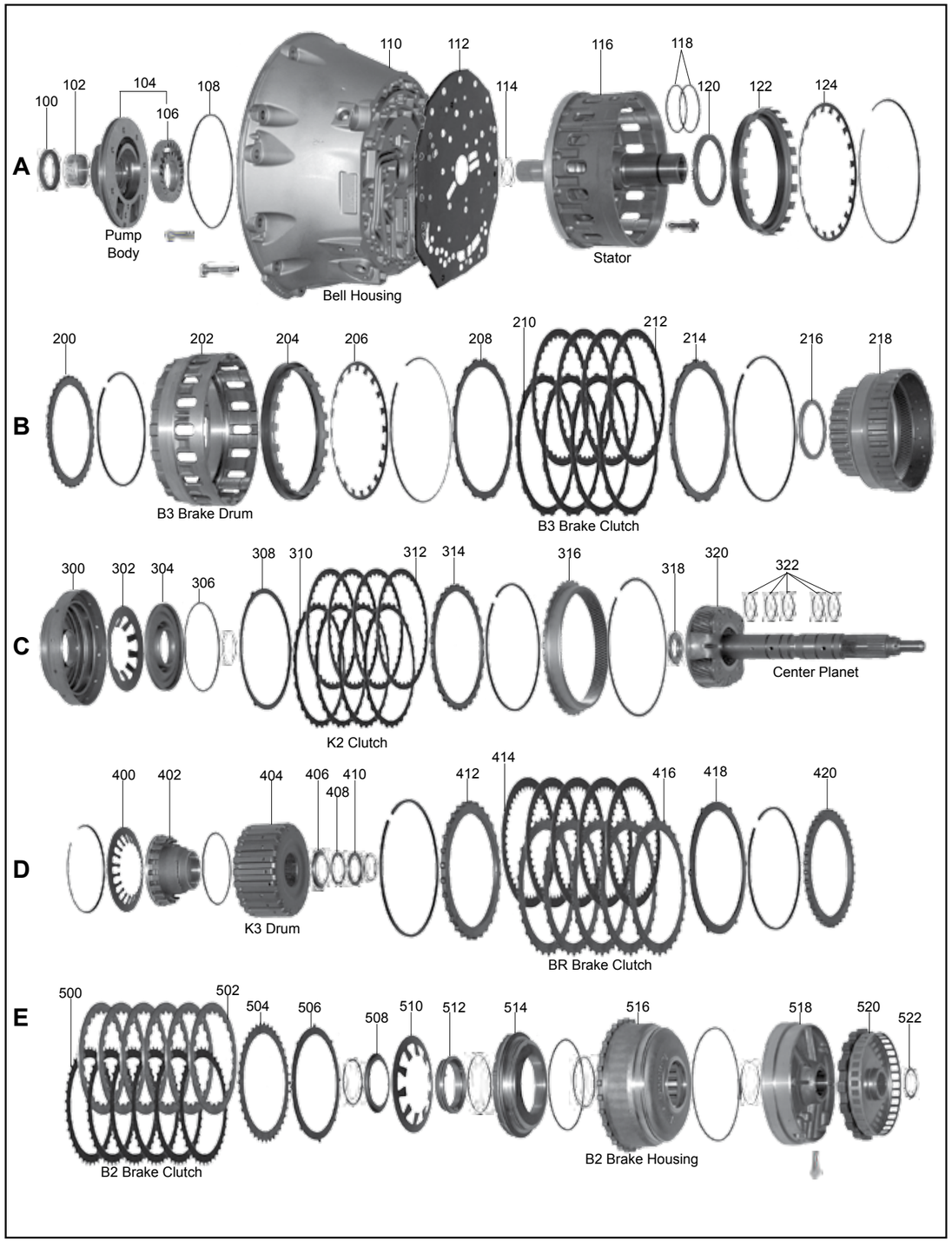
A
100
102
104
106
108
110
112
114
116
118
120
122
124
Pump Body
Bell Housing
Stator
B
200
202
204
206
208
210
212
214
216
218
B3 Brake Drum
B3 Brake Clutch
C
300
302
304
306
308
310
312
314
316
318
320
322
K2 Clutch
Center Planet
D
400
402
404
406
408
410
412
414
416
418
420
K3 Drum
BR Brake Clutch
E
500
502
504
506
508
510
512
514
516
518
520
522
B2 Brake Clutch
B2 Brake Housing

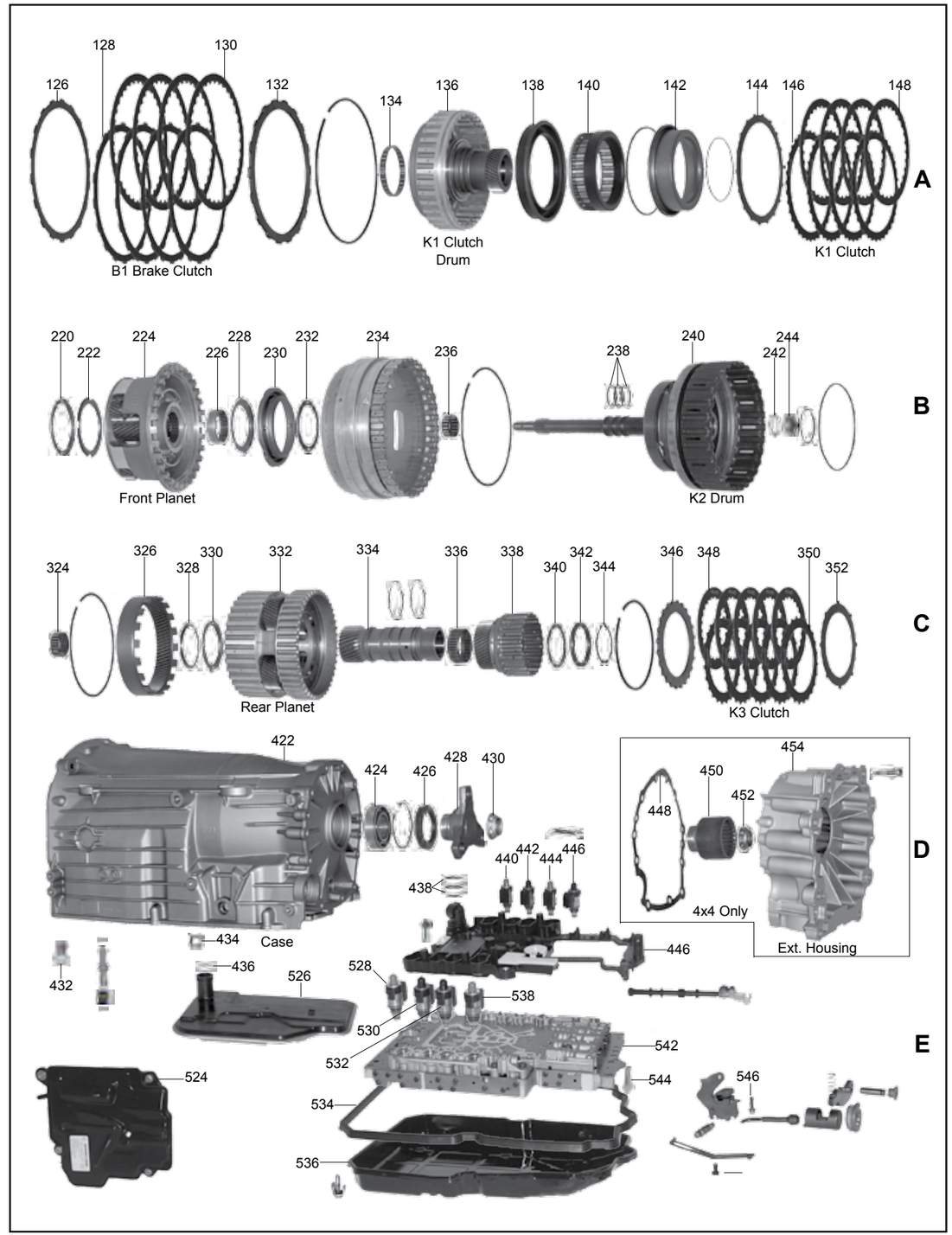
126
128
130
132
134
136
138
140
142
144
146
148
A
B1 Brake Clutch
K1 Clutch Drum
K1 Clutch
220
222
224
226
228
230
232
234
236
238
240
242
244
B
Front Planet
K2 Drum
324
326
328
330
332
334
336
338
340
342
344
346
348
350
352
C
Rear Planet
K3 Clutch
422
424
426
428
430
448
450
452
454
4x4 Only
Ext. Housing
D
434
Case
438
440
442
444
446
432
436
526
528
538
530
532
542
544
524
534
536
546
E

ILL.		Qty.	Year	Part #	Ref. #
MASTER OVERHAUL KITS (WITH STEELS)					
N.I.	722.9	1	04-Up	288006	N.L.
OVERHAUL KITS (WITH RINGS AND SEALS)					
N.I.	722.9	1	04-Up	288002	N.L.
BONDED PISTONS					
N.I.	Piston Kit	1	04-Up	288960K	N.L.
122A	Piston, B1 (Bonded)	1	04-Up	288967	221-272-2031
138A	Piston, K1 (Bonded)	1	04-Up	288965	N.L.
204B	Piston, B3 (Bonded)	1	04-Up	288969	221-272-2131
GASKETS & O-RINGS					
108A	O-Ring, Pump	1	04-Up	68311B	016-997-1448
112A	Gasket, Bell Housing Plate	1	04-Up	288544	220-277-1614
448D	Gasket, Adapter Housing (Awd)	1	04-Up	288305	164-277-0014
534E	Gasket, Pan (Molded Rubber)	1	04-Up	288300	220-271-0380
METAL CLAD SEALS					
100A	Pump	1	04-Up	68070B	018-997-0447
426D	Rear (2wd)	1	04-Up	78074	023-997-8747
426D	Adapter Housing (Awd)	1	04-Up	288074A	013-997-7246
N.I.	Manual Lever	1	04-Up	68072B	013-997-9146
SEALING RINGS & KITS					
N.I.	Sealing Ring Kit	1	04-Up	288175K	N.L.
FRICTION PLATES					
128A	B1 (One Sided External Teeth)	4	04-Up	288134	220-272-0126
130A	B1 (One Sided Internal Teeth)	4	04-Up	288114	221-272-0225
146A	K1 (One Sided External Teeth)	4	04-Up	288126	N.L.
148A	K1 (One Sided Internal Teeth)	4	04-Up	288106	N.L.
210B	B3 (One Sided External Teeth)	4	04-Up	288134	220-272-0126
212B	B3 (One Sided Internal Teeth)	4	04-Up	288114	221-272-0225
310C	K2 (One Sided External Teeth)	4-7	04-Up	288120	220-272-18-26
312C	K2 (One Sided Internal Teeth)	4-7	04-Up	288100	220-272-08-25
348C	K3 (One Sided Internal Teeth)	5	04-Up	78102B	N.L.
350C	K3 (One Sided External Teeth)	5	04-Up	78122B	N.L.
414D	BR	4-5	04-Up	78110	220-272-0725
500E	B2 (Two Sided External Teeth)	6	04-Up	78112	220-272-1726
STEEL PLATES					
416D	BR	4-5	04-Up	78130	221-272-1126
502E	B2 (Internal Teeth)	5	04-Up	78132	221-272-0025
PRESSURE PLATES					
132A	B1 (.155") (18T)	1	04-Up	288144	N.L.
200B	K1 (.155") (36T)	1	04-Up	288146	N.L.
214B	B3 (.155") (18T)	1	04-Up	288154	N.L.
314C	K2 (.155") (30T)	1	04-Up	288140	N.L.
346C	K3 (.155") (24T)	1	04-Up	288142	N.L.
412D	BR (.255") (30T)	1	04-Up	288150	N.L.
420D	B2 (.255") (40T)	1	04-Up	288152	N.L.
FILTERS					
526E	Filter	1	04-Up	288010	221-277-0195
FILTER KITS					
N.I.	Filter Kit	1	04-Up	288011	N.L.
BUSHINGS					
102A	Front Pump Body	1	04-Up	78034	N.L.

ILL.		Qty.	Year	Part #	Ref. #
THRUST WASHERS/BEARINGS					
BEARINGS					
120A	Stator to K1 Drum	1	04-Up	288211	N.L.
134A	K1 Drum Caged Bearing (Front)	1	04-Up	288228	N.L.
216B	K1 Drum to Front Planet Ring Gear	1	04-Up	288234	N.L.
228B	Front Planet Race (Rear)	1	04-Up	288239	N.L.
232B	Front Planet to K2 Drum	1	04-Up	288238	N.L.
236B	Input Shaft to Stator Shaft Caged Bearing	1	04-Up	288244	N.L.
244B	K2 Drum Cage Bearing	1	04-Up	288215	N.L.
318C	K2 Drum to Center Planet	1	04-Up	288216	N.L.
324C	Rear Planet Output Shaft to Sun Gear Caged Bearing	1	04-Up	288250	N.L.
326C	Front Planet Caged Needle Bearing	1	04-Up	288237	N.L.
330C	Center Planet to Rear Planet Bearing w/ Race	1	04-Up	288247	N.L.
336C	Rear Sun Gear Caged Bearing	1	04-Up	288249	N.L.
340C	Rear Sun Gear to K3 Drum	1	04-Up	288220	N.L.
342C	Rear Sun Gear to K3 Drum Race	1	04-Up	288221	N.L.
406D	K3 Drum to Rear Support Race (w/ ID Lip)	1	04-Up	288231	N.L.
408D	K3 Drum to Rear Support	1	04-Up	288232	N.L.
410D	K3 Drum to Rear Support Race	1	04-Up	288233	N.L.
424D	Output Shaft to Case Ball Bearing	1	04-Up	288271	N.L.
522E	Shim, Park Gear to Output Bearing	AR	04-Up	288270	N.L.
ELECTRICAL COMPONENTS					
448D	Harness, Internal	1	04-Up	288446	N.L.
524E	Switch, Manual Lever (ISM)	1	04-Up	288410	N.L.
528E	Solenoid (Blue Cap) (B2, B3, K1, TCC)	1-4	04-Up	288421	N.L.
530E	Solenoid (Black Cap) (B1, K2, K3, EPC)	1-4	04-Up	288428	N.L.
PUMPS					
104A	Pump	1	04-Up	288500	N.L.
N.I.	Pump, Auxiliary	1	04-Up	288508	N.L.
PUMP COMPONENTS					
106A	Pump Gears (23T / 19T)	1	04-Up	288530	N.L.
DRUMS & COMPONENTS					
122A	Piston, B1 (Bonded)	1	04-Up	288967	221-272-2031
124A	Return Spring, B1	1	04-Up	288977	N.L.
126A	Cushion, B1 (18T) (.075")	1	04-Up	288854	N.L.
136A	K1 (42T Sun Gear)	1	04-Up	288555	N.L.
138A	Piston, K1 (Bonded)	1	04-Up	288965	N.L.
140A	Return Spring, K1	1	04-Up	288975	N.L.
142A	Retainer, K1	1	04-Up	288985	N.L.
144A	Cushion, K1 (18T) (.080")	1	04-Up	288853	N.L.
204B	Piston, B3 (Bonded)	1	04-Up	288969	221-272-2131
206B	Return Spring, B3	1	04-Up	288979	N.L.
208B	Cushion, B3 (18T) (.075")	1	04-Up	288857	N.L.
240B	K2 (86T Sun Gear)	1	04-Up	288550	N.L.
300C	Piston, K2 (6.250" Wide)	1	04-Up	288960	N.L.
302C	Return Spring, K2	1	04-Up	288970	N.L.
304C	Retainer, K2	1	04-Up	288980	N.L.
308C	Cushion, K2 (3T) (.085")	1	04-Up	288858	N.L.
352C	Cushion, K3 (8T) (.070")	1	04-Up	288851	N.L.
400D	Return Spring, K3	1	04-Up	288971	N.L.
402D	Piston, K3	1	04-Up	288961	N.L.
404D	K3	1	04-Up	288551	N.L.
418D	Cushion, BR (6T) (.135")	1	04-Up	288855	N.L.
506E	Cushion, B2 (8T) (.095")	1	04-Up	288852	N.L.
510E	Return Spring, B2	1	04-Up	288974	N.L.
512E	Sleeve, B2 (Inner)	1	04-Up	288984	N.L.
514E	Piston, B2 (5.700" Wide)	1	04-Up	288964	N.L.
516E	B2	1	04-Up	288554	N.L.
516E	Piston, BR (B2 Drum)	1	04-Up	288554	N.L.

ILL.		Qty.	Year	Part #	Ref. #
PLANETS & COMPONENTS					
218B	Ring Gear, Front (110T)	1	04-Up	288592	N.L.
224B	Planet, Front (Compound) (4 Gear / 4 Gear)	1	04-Up	288582	N.L.
316C	Ring Gear, Rear (114T)	1	04-Up	288594	N.L.
320C	Planet, Center w/ Output Shaft (13 1/2" Long)	1	04-Up	288580	N.L.
326C	Ring Gear, Center (76T)	1	04-Up	288590	N.L.
332C	Planet, Rear (4 gear) (w/ Flat Internal Bearing Race)	1	04-E10	288584	N.L.
332C	Planet, Rear (4 gear) (w/ Lipped Internal Bearing Race)	1	L10-Up	288584A	N.L.
SUN GEARS					
334C	Sun Gear, Center (28T) (w/ Short Extended Step)	1	04-E10	288610	N.L.
334C	Sun Gear, Center (28T) (w/ Long Extended Step)	1	L10-Up	288610A	N.L.
338C	Sun Gear, Rear (46T) (No Inner Recess)	1	04-E10	288614	N.L.
338C	Sun Gear, Rear (46T) (w/ Inner Recess)	1	L10-Up	288614A	N.L.
SHELLS & SUPPORTS					
202B	Support, B3 Piston	1	04-Up	288959	N.L.
234B	Drive Shell	1	04-Up	288620	N.L.
518E	Support, BR Piston	1	04-Up	288954	N.L.
VALVE BODIES & GOVERNORS					
542E	Valve Body w/ TCM (8 Solenoids)	1	04-Up	288740	N.L.
CASES/HOUSINGS & COMPONENTS					
110A	Bell Housing	1	04-Up	288750	N.L.
422D	Case	1	04-Up	288760	N.L.
454D	Extension Housing (4wd)	1	04-Up	288770	N.L.
536E	Pan	1	04-Up	288765	N.L.
MISCELLANEOUS COMPONENTS					
520E	Park Gear w/ Tone Ring (36 Hole)	1	04-Up	288690	N.L.

Notes

TK TOLEDO TRANS-KIT · SEAL AFTERMARKET PRODUCTS your source for engineered solutions · BRYCO · ProSELECT · RoadMaster

PRODUCT ANNOUNCEMENT

F1C1 (CVT) 2001-Up

Seal Aftermarket Products now has the Overhaul Kit for the F1C1 transmission series covering 2001-Up. **Please call your Sales Representative for pricing and availability**

Innovative Engineered Solutions

- Rear Cover to Pully Shaft Plastic Sealing Rings
- Main Body & Secondary Separator Plates
- Valve Body Screen Filters Included



Vehicle Coverage

Mitsubishi
►Lancer 2008-Up [I4 2.0L & 2.4L]
►Colt / Colt Plus 2002-09 [I4 1.3L & 1.5L]

Rebuild Kits

Available Now
T312002X - Overhaul Kit F1C1 (W/Out Pistons) 2001-Up

Available with 5 day lead-time
T312004X - Master L/Steels Kit F1C1 (W/Out Pistons) 2001-Up



B00009

Components



70058
Seal F1C1 Converter 2001-Up



70355
F1C1 Axle (both sides) 2001-Up



31265137
Screen Filter F1C1 Valve Body (Round) 2001-Up



31265138
Screen Filter F1C1 Valve Body (Cylindrical) 2001-Up



31265139
Screen Filter F1C1 Valve Body (Rectangular) 2001-Up

Release Date 1/17/2014

Sales Policy: All shipments are FCA Pembroke Park. Price and Availability subject to change
© 2014 Seal Aftermarket Products LLC. ALL RIGHTS RESERVED. Possession of price list does not constitute offer to sell
Disclaimer - All information has been checked for accuracy, however no liability can be assumed for errors and omissions

Seal Aftermarket Products LLC · 2315 SW 32nd Avenue · Pembroke Park FL 33023 · [P] (800) 582-2760 · [F] 954-364-2401 · www.sealaftermarketproducts.com

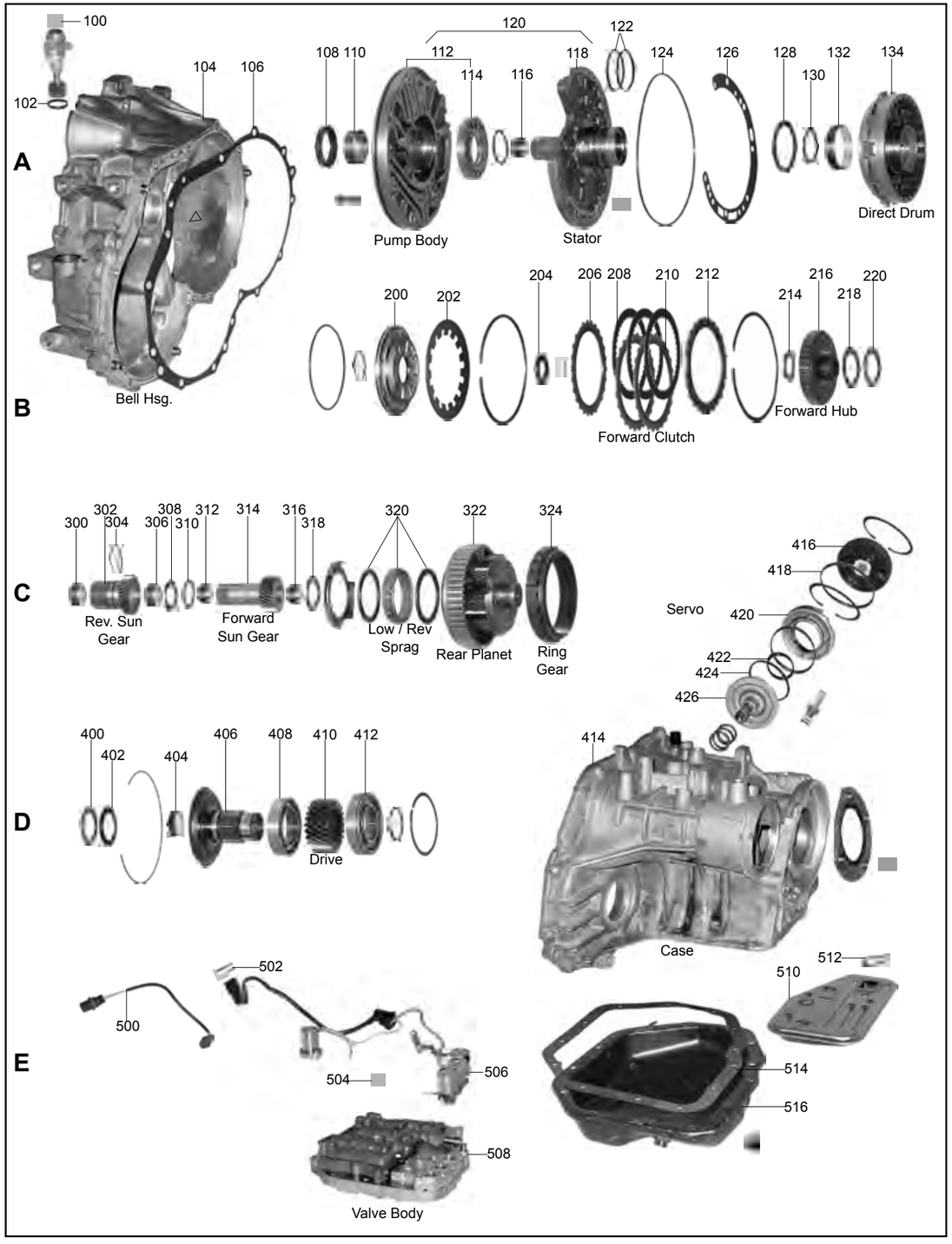
100
102
104
106
A
B
Bell Hsg.
108 110
112
114
116
118
120
122
124
126
128
130
132
134
Pump Body
Stator
Direct Drum
200
202
204
206 208
210
212
214
216
218
220
Forward Clutch
Forward Hub
C
300
302
304
306
308
310
312
314
316
318
320
322
324
Rev. Sun Gear
Forward Sun Gear
Low / Rev Sprag
Rear Planet
Ring Gear
416
418
Servo
420
422
424
426
414
Case
D
400
402
404
406
408
410
412
Drive
E
500
502
504
506
508
Valve Body
510
512
514
516

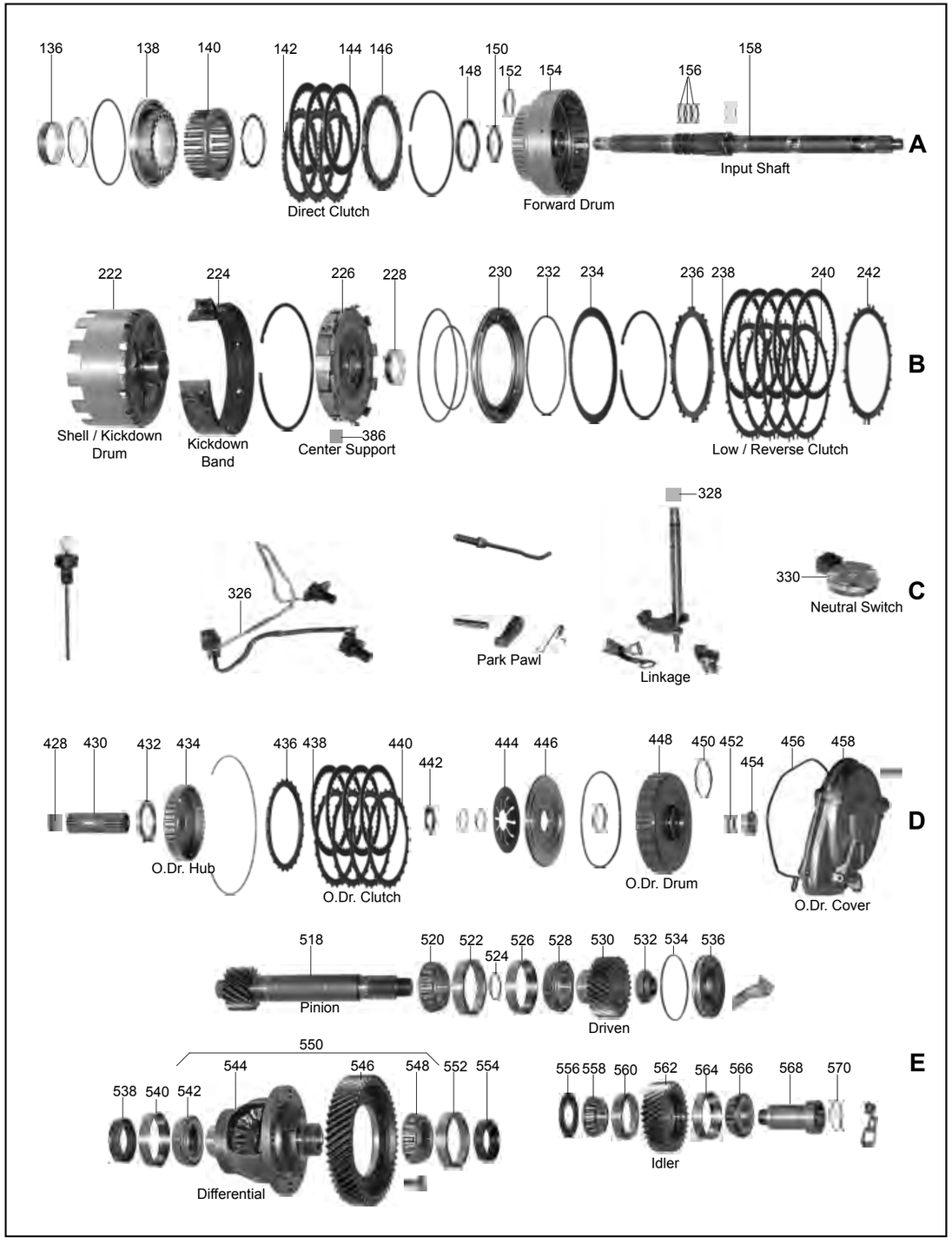
136
138
140
142
144
146
148
150
152
154
156
158
Direct Clutch
Forward Drum
Input Shaft
A
222
224
226
228
230
232
234
236
238
240
242
Shell / Kickdown Drum
Kickdown Band
386
Center Support
Low / Reverse Clutch
B
328
326
Park Pawl
Linkage
330
Neutral Switch
C
428
430
432
434
436
438
440
442
444
446
448
450
452
454
456
458
O.Dr. Hub
O.Dr. Clutch
O.Dr. Drum
O.Dr. Cover
D
518
520
522
524
526
528
530
532
534
536
Pinion
Driven
550
538
540
542
544
546
548
552
554
556
558
560
562
564
566
568
570
Differential
Idler
E

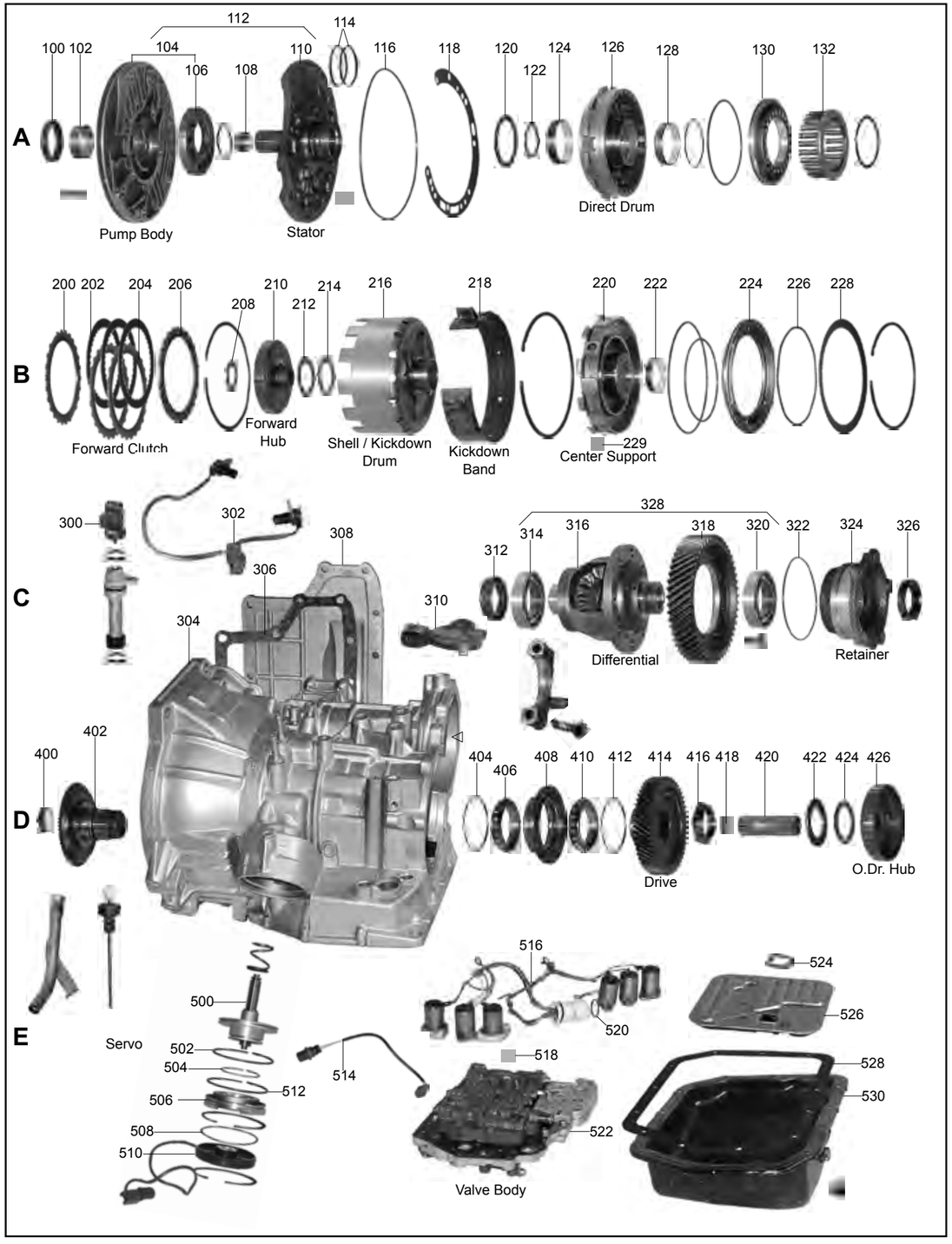
A
B
C
D
E
100 102 104 106 108 110 112 114 116 118 120 122 124 126 128 130 132
Pump Body
Stator
Direct Drum
200 202 204 206 208 210 212 214 216 218 220 222 224 226 228
Forward Clutch
Forward Hub
Shell / Kickdown Drum
Kickdown Band
229
Center Support
300 302 304 306 308 310 312 314 316 318 320 322 324 326 328
Differential
Retainer
400 402 404 406 408 410 412 414 416 418 420 422 424 426
Drive
O.Dr. Hub
500 502 504 506 508 510 512 514 516 518 520 522 524 526 528 530
Servo
Valve Body

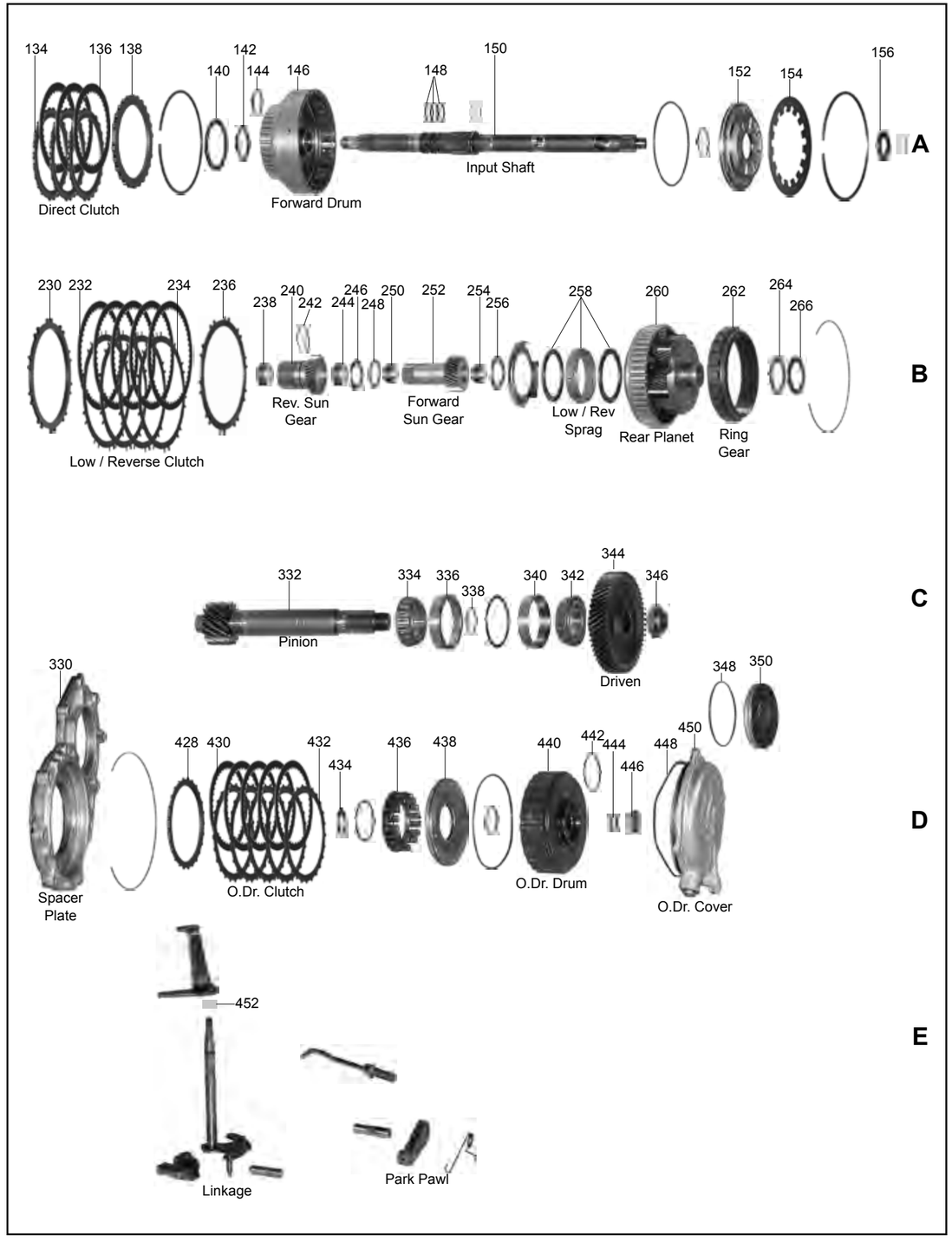
A
B
C
D
E
134 136 138 140 142 144 146 148 150 152 154 156
Direct Clutch
Forward Drum
Input Shaft
230 232 234 236 238 240 242 244 246 248 250 252 254 256 258 260 262 264 266
Low / Reverse Clutch
Rev. Sun Gear
Forward Sun Gear
Low / Rev Sprag
Rear Planet
Ring Gear
332 334 336 338 340 342 344 346
Pinion
Driven
330 348 350 428 430 432 434 436 438 440 442 444 446 448 450
Spacer Plate
O.Dr. Clutch
O.Dr. Drum
O.Dr. Cover
452
Linkage
Park Pawl

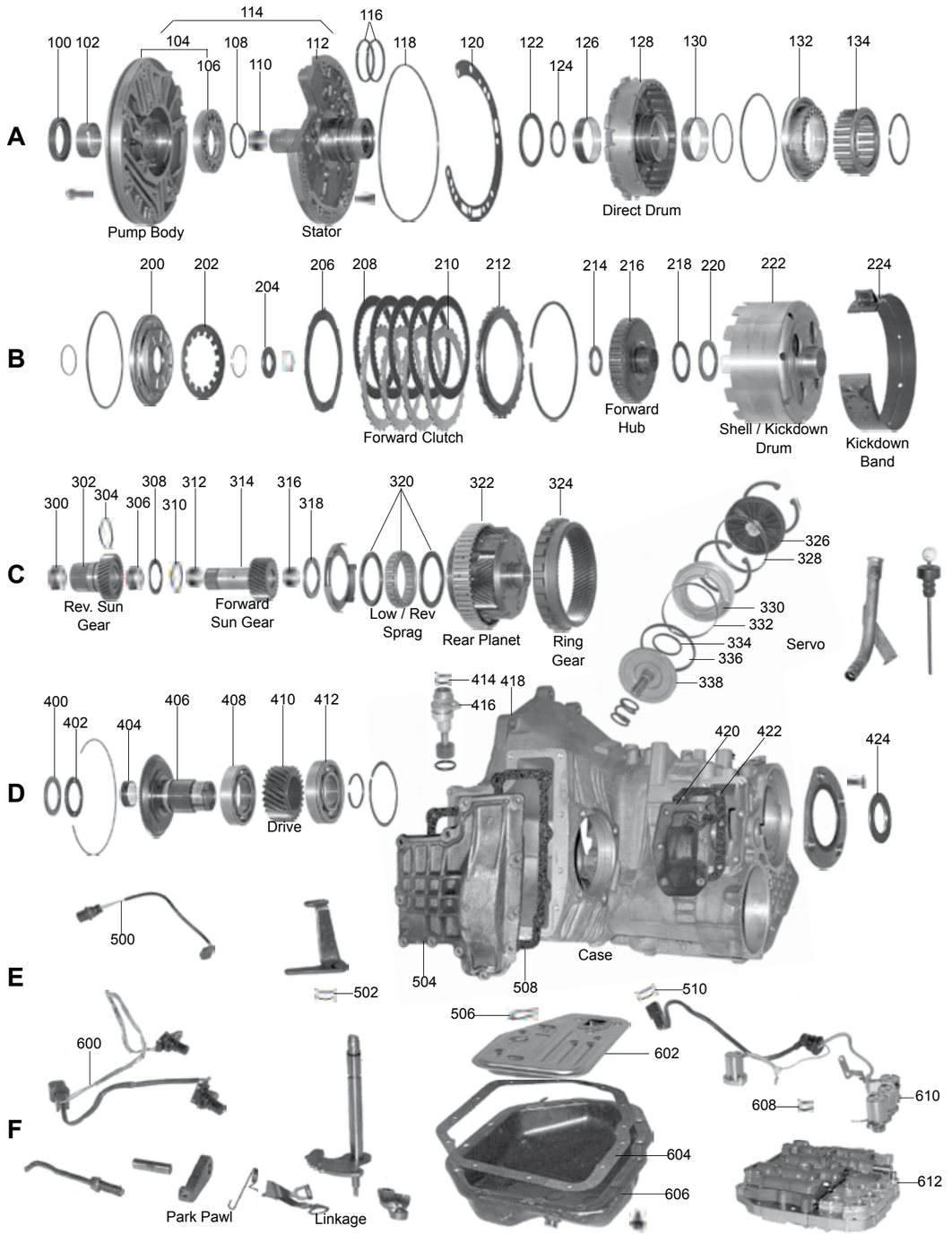
A
100 102 104 106 108 110 112 114 116 118 120 122 124 126 128 130 132 134
Pump Body
Stator
Direct Drum
B
200 202 204 206 208 210 212 214 216 218 220 222 224
Forward Clutch
Forward Hub
Shell / Kickdown Drum
Kickdown Band
C
300 302 304 306 308 310 312 314 316 318 320 322 324 326 328 330 332 334 336 338
Rev. Sun Gear
Forward Sun Gear
Low / Rev Sprag
Rear Planet
Ring Gear
Servo
D
400 402 404 406 408 410 412 414 416 418 420 422 424
Drive
Case
E
500 502 504 506 508 510
F
600 602 604 606 608 610 612
Park Pawl
Linkage

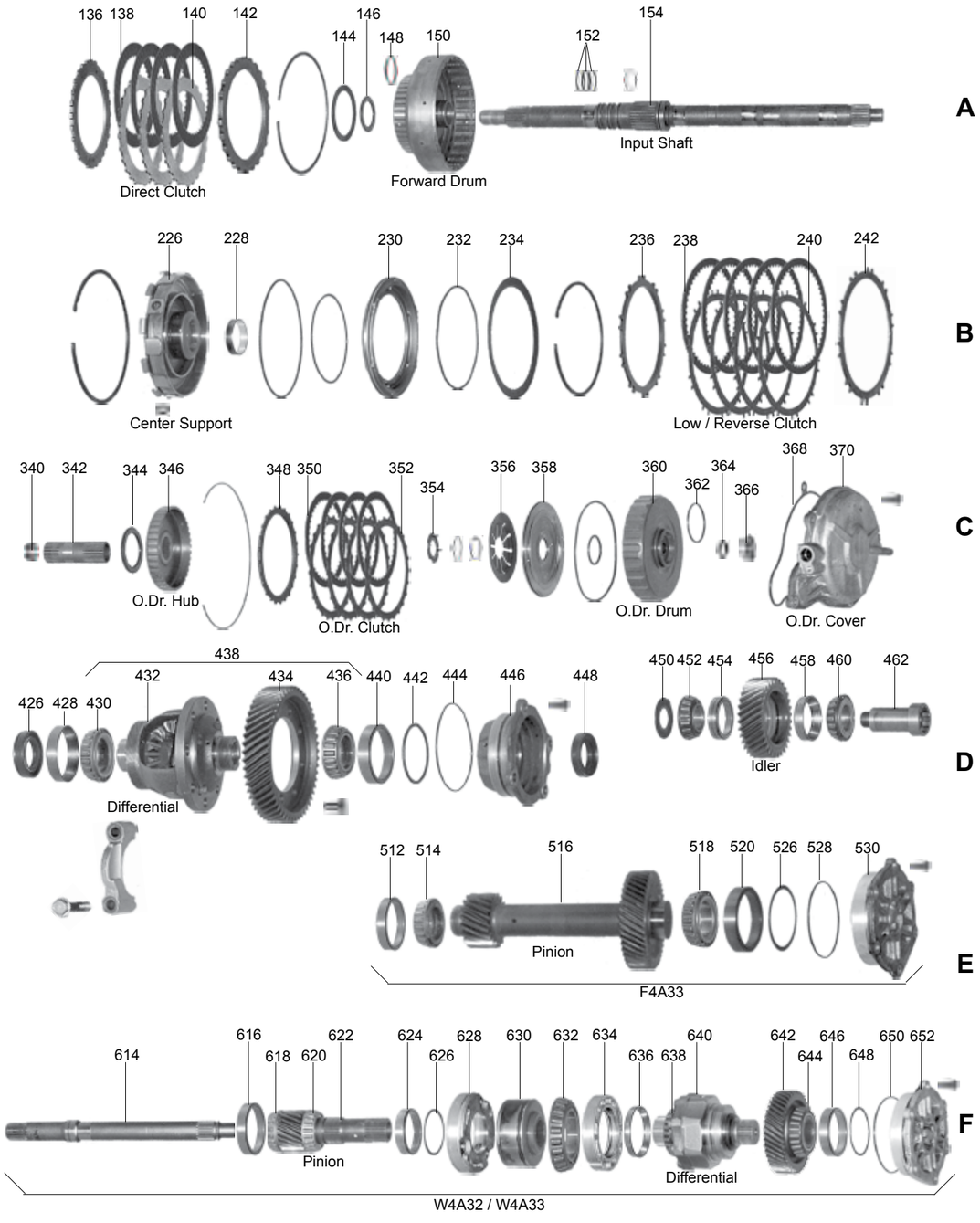
A
136 138 140 142 144 146 148 150 152 154
Direct Clutch
Forward Drum
Input Shaft
B
226 228 230 232 234 236 238 240 242
Center Support
Low / Reverse Clutch
C
340 342 344 346 348 350 352 354 356 358 360 362 364 366 368 370
O.Dr. Hub
O.Dr. Clutch
O.Dr. Drum
O.Dr. Cover
D
426 428 430 432 434 436 438 440 442 444 446 448 450 452 454 456 458 460 462
Differential
Idler
E
512 514 516 518 520 526 528 530
Pinion
F4A33
F
614 616 618 620 622 624 626 628 630 632 634 636 638 640 642 644 646 648 650 652
Pinion
Differential
W4A32 / W4A33

ILL.		Qty.	Year	Part #	Ref. #
MASTER OVERHAUL KITS (WITH STEELS)					
N.I.	KM170, 171, 172 (3 Speed)	1	79-88	42006	N.L.
N.I.	KM171-5, 172-5, F3A21, F3A22 (3 Speed)	1	89-Up	42006H	N.L.
N.I.	KM175, 175-1, 175-2 (4 Speed)	1	85-88	42006C	N.L.
N.I.	KM175-5, 176-5, 177-8 (F4A21, F4A22, F4A23) (4 Speed)	1	89-Up	42006E	N.L.
N.I.	A4AF-1, A4AF-2 (Accent, Scoupe) (F4A32)	1	93-99	42006K	N.L.
N.I.	A4BF-1 (Elantra & Tiburon) (F4A32)	1	96-99	42006L	N.L.
N.I.	A4BF-3 (Accent)	1	00-Up	42006KA	N.L.
N.I.	A4BF-3 (Elantra, Tiburon)	1	00-01	42006LA	N.L.
N.I.	F4A33-1, W4A33-1	1	91-Up	42006M	N.L.
N.I.	W4A32-1	1	91-97	42006N	N.L.
MASTER OVERHAUL KITS (LESS STEELS)					
N.I.	KM170, 171, 172 (3 Speed)	1	79-88	42004A	N.L.
N.I.	KM171-5, 172-5, F3A21, F3A22 (3 Speed)	1	89-Up	42004H	N.L.
N.I.	KM175, 175-1, 175-2 (4 Speed)	1	85-88	42004C	N.L.
N.I.	KM175-5, 176-5, 177-8 (F4A21, F4A22, F4A23) (4 Speed)	1	89-Up	42004E	N.L.
N.I.	A4AF-1, A4AF-2 (Accent, Scoupe) (F4A32)	1	93-99	42004K	N.L.
N.I.	A4BF-1 (Elantra & Tiburon) (F4A32)	1	96-99	42004L	N.L.
N.I.	A4BF-3 (Accent)	1	00-Up	42004KA	N.L.
N.I.	A4BF-3 (Elantra, Tiburon)	1	00-01	42004LA	N.L.
N.I.	F4A33-1, W4A33-1	1	91-Up	42004M	N.L.
N.I.	W4A32-1	1	91-97	42004N	N.L.
OVERHAUL KITS (WITH RINGS AND SEALS)					
N.I.	KM170, 171, 172 (3 Speed)	1	79-88	42002A	N.L.
N.I.	KM171-5, 172-5, F3A21, F3A22 (3 Speed)	1	89-Up	42002H	N.L.
N.I.	KM175, 175-1, 175-2, KM177 (4 Speed)	1	85-88	42002C	N.L.
N.I.	KM175-5, 176-5, 177-8, F4A21, F4A22, F4A23 (4 Speed)	1	89-Up	42002E	N.L.
N.I.	A4AF-1, A4AF-2, A4BF-1 (F4A32)	1	93-99	42002L	N.L.
N.I.	A4BF-3	1	00-Up	42002LA	N.L.
N.I.	F4A33-1, W4A33-1, W4A32-1	1	91-Up	42002M	N.L.
N.I.	W4A32-1, W4A33-1 Transfer Case Parts	1	91-Up	42001MA	N.L.
GASKETS & O-RINGS					
106A	Gasket, Case to Bell Housing Gasket (18 Hole Metal)	1	89-Up	42318E	MD730804
124A	O-Ring, Pump	1	79-Up	42311A	MD707636
126A	Gasket, Pump (KM's 82-Up)	1-2	82-Up	42310B	MD722385
126A	Gasket, Pump (F4A33, W4A32, W4A33)	1	91-Up	42310M	MD752978
126A	Gasket, Pump (A4AF-1, A4AF-2, A4BF-1, A4BF-3)	1	93-Up	42310L	46156-22040
514E	Gasket, Bottom Pan (12 Bolt) (Exc. KM177, 177-8)	1	79-Up	42300A	MD739235
514E	Gasket, Bottom Pan (13 Bolt) (KM177, 177-8)	1	87-Up	42300P	MD722527
514E	Gasket, Bottom Pan (13 Bolt) (A4AF-1, A4AF-2)	1	93-Up	42300L	N.L.
514E	Gasket, Bottom Pan (13 Bolt) (A4BF-1, A4BF-3)	1	96-Up	42300LA	45285-28010
514E	Gasket, Bottom Pan (14 Bolt)	1	91-Up	42300M	MD738078
METAL CLAD SEALS					
108A	Front	1	79-Up	42070A	MD707575
452D	Overdrive Drum (6/92-Up	1	L92-Up	42083EA	MD736847
538E	Axle, Left & Right (All KM Series)	2	79-Up	42076A	N.L.
538E	Axle, Left & Right (F4A33) (91-5/92)	2	91-E92	42076A	N.L.
538E	Axle, Left & Right (F4A33) (6/92-Up	2	L92-Up	42076M	MD742053
538E	Axle, Right (Awd W4A32, W4A33)	1	92-Up	42076A	N.L.
538E	Axle, Left & Right (All Hyundai A4AF, A4BF)	2	93-Up	42076L	43119-28001
SEALING RINGS & KITS					
N.I.	Ring Kit, KM175-5, 176-5, 177-8, A4AF, A4BF	1	89-Up	42175EK	N.L.
N.I.	Ring Kit, F4A33, W4A33-1	1	91-Up	42175MK	N.L.
FRICTION PLATES					
144A	Direct (F4A33, W4A33)	4	91-Up	42106M	MD73-5828
144A	Direct (3.76" ID)	2-3	79-88	42106B	MD713655
144A	Direct (3.90" ID)	1-3	89-Up	42106E	MD73-7892
144A	Forward (KM's) (38T) (3.76" ID)	2-3	79-88	42106B	MD713655
144A	Forward (KM's) (38T) (3.90" ID)	1-3	89-Up	42106E	MD73-7892
208B	Forward (KM's) (10T)	2	79-88	42106A	MD714345
208B	Forward (A4AF, A4BF) (.067") (3.90" ID) (1/98-Up)	2-5	E98-Up	42108	45449-22770

ILL.		Qty.	Year	Part #	Ref. #
FRICTION PLATES (Cont.)					
208B	Forward (F4A33, W4A33)	5	91-Up	42106MC	MD73-1582
238B	Low/ Reverse (48T)	4-6	79-88	42114B	MD728108
238B	Low/ Reverse (51T)	4-6	89-Up	42114E	MD71-9833
238B	Low/ Reverse (54T) (F4A33, W4A33)	6	91-Up	42114M	MD73-1586
438D	Overdrive (40T)	3-4	85-Up	42100C	MD73-9092
438D	Overdrive (36T) (A4BF-3)	3-5	00-Up	42100D	45560-22761
N.I.	Friction & Steel Kit, KM End Clutch "Power Pack" & Seal Kit	1	85-Up	42100APK	059935PWR
STEEL PLATES					
142A	Direct (.150") (All 79-88)	3	79-88	42126B	MD707256
142A	Direct (.146") (All 89-Up Exc. F4A33, W4A33-1)	1-3	89-Up	42146E	MD722559
142A	Direct (.120") (KM177)	1-2	92-Up	42126G	MD739509
142A	Direct (.088") (F4A33, W4A33-1)	3	91-Up	42126M	MD739384
142A	Direct (.150") (F4A33, W4A33-1)	1	91-Up	42126MB	MD739385
210B	Forward (4.000" ID) (KM's)	2	79-88	42128A	MD707255
210B	Forward (4.100" ID) (KM's)	2-3	89-Up	42128E	MD722556
210B	Forward (.071") (A4AF-1, A4AF-2, A4BF-1)	1-2	93-E98	42128E	MD722556
210B	Forward (.071") (W4A32-1)	2	91-Up	42128E	MD722556
210B	Forward (.087") (A4AF-1, A4AF-2, A4BF-1)	1-2	93-99	42128	45451-28000
210B	Forward (.079") (A4BF-3)	4-5	00-Up	42128G	45451-22700
210B	Forward (.063") (F4A33, W4A33-1)	5	91-Up	42128M	MD731604
240B	Low/ Reverse (.039") (20T) (5.300" ID)	5	89-Up	42134E	MD727798
240B	Low/ Reverse (.071") (20T) (5.300" ID)	3	89-Up	42134H	MD727799
240B	Low/ Reverse (.039") (20T) (5.540"ID) (F4A33, W4A33-1)	5	91-Up	42134M	MD731587
440D	Overdrive (.032") (Exc. Below)	3-4	85-Up	42120C	MD712528
440D	Overdrive (.039") (A4AF-1, A4AF-2)	3	L97-99	42120D	45561-37001
440D	Overdrive (.098") (A4BF-3 Elantra, Tiburon)	5	00-01	42120	45561-28801
440D	Overdrive (.157") (A4BF-3 Accent)	3	00-Up	42120E	45451-28000
PRESSURE PLATES					
146A	Direct .146" (24T) 4.10" ID	1	89-Up	42146E	MD722559
146A	Direct .195" (26T) 4.120" ID	1	89-Up	42146M	MD739386
212B	Forward .146" (24T) 4.10" ID	1	89-Up	42146E	MD722559
212B	Forward .195" (24T) 4.10" ID Beveled	1	89-Up	42149E	MD732408
436D	Overdrive (25T) 4.170" ID	1	85-Up	42140C	N.L.
FILTERS					
510E	KM's 1979-81	1	79-81	42010A	MD707786
510E	KM's 1982-87 (Also Fits 1988 KM172)	1	82-87	42010EA	MD729955
510E	KM's 1988-1/92 (Exc. 1988 KM172)	1	88-92	42010P	MD673110
510E	KM's 1/92-Up	1	92-Up	42010E	MD573110
510E	A4AF-1, A4AF-2, A4BF-1 (F4A32)	1	93-99	42010L	46321-22050
510E	A4BF-3	1	00-Up	42010LA	46321-22731
510E	F4A33-1, W4A33-1, W4A32-1	1	91-Up	42010M	MD-735572
FILTER KITS					
N.I.	KM's (88-Up)	1	88-Up	42011E	N.L.
N.I.	A4AF-1, A4AF-2 (F4A32)	1	93-99	42011L	N.L.
N.I.	A4BF-3	1	00-Up	42011LA	N.L.
N.I.	A4BF-1	1	96-99	42011K	N.L.
N.I.	F4A33-1, W4A33-1, W4A32-1	1	91-Up	42011M	N.L.
BANDS					
224B	Kickdown, KM170, 171, 172, 175, 176 (1.562" Wide)	1	79-Up	42022A	MD713179
224B	Kickdown, KM177, F4A32, W4A32, A4AF (1.732" Wide)	1	87-Up	42022G	MD719933
224B	Kickdown, F4A33, W4A33 (2.362" Wide)	1	91-Up	42022M	MD736920
BUSHINGS					
N.I.	Bushing Kit, All KM's (Combo)	1	79-Up	42030AC	N.L.
N.I.	Bushing Kit, KM171-5, 175-5, 176-5, 177-8	1	89-Up	42030E	N.L.
N.I.	Bushing Kit, F4A33-1	1	91-Up	42030G	N.L.
110A	Bushing Kit, All KM (Pump Body & Stator Bushing Only)	1	79-Up	42034AK	N.L.
110A	Pump Body (All)	1	79-Up	42034A	N.L.

ILL.		Qty.	Year	Part #	Ref. #
ELECTRICAL COMPONENTS					
326C	Pulse Generator, Input/Output w/ Harness (KM177) (Gray Tape)	1	88-98	42436P	N.L.
326C	Pulse Generator, Input/Output w/ Harness (KM178) (Blue Tape)	1	93-99	42436G	N.L.
326C	Pulse Generator, Input/Output w/ Harness (F4A32) (Blue Tape)	1	93-99	42436G	N.L.
326C	Pulse Generator, Input/Output w/ Harness (F4A33) (Orange Tape)	1	91-99	42436M	N.L.
326C	Pulse Generator, Input/Output w/ Harness (A4BF-3) (Red Tape)	1	99-Up	42436LB	N.L.
500E	Sensor, Transmission Oil Temperature (TOT)	1	92-Up	86437	N.L.
506E	Solenoid Master Kits (Low OHM TCC)	1	85-92	42420CK	MB725037
506E	Solenoid Master Kits (High OHM TCC)	1	93-Up	42420EK	MB754832
506E	Solenoid Master Kits (A4BF3) (6 Solenoids)	1	00-Up	42420LB	N.L.
N.I.	Solenoid, Shift A & B	1	85-Up	42421E	N.L.
N.I.	Solenoid, TCC (Low OHM)	1	85-92	42425E	N.L.
N.I.	Solenoid, TCC (High OHM)	1	93-Up	42425EA	N.L.
N.I.	Solenoid, EPC 1st Design w/ Flat Nose	1	85-88	42431A	N.L.
N.I.	Solenoid, EPC 2nd Design w/ Extended Nose	1	89-Up	42431	N.L.
VALVE BODY RECALIBRATION KITS					
N.I.	Shift Kit®, KM175, 177, 175-5, 176-5, 177-8 (4 Speeds) (Transgo®)	1	88-Up	T42165C	SK® KM175/77
N.I.	Valve Body Kit, A4BF3	1	00-Up	42165L	N.L.
N.I.	Shift Enhance Kit, KM175-KM177 (Superior)	1	88-Up	42165C	N.L.
PUMPS					
120A	Pump, KM171-5	1	89-Up	42500H	N.L.
120A	Pump, KM175-5	1	89-Up	42500E	N.L.
120A	Pump, KM177-8	1	89-Up	42500G	N.L.
120A	Pump, Elantra	1	96-99	42500JB	4611035000
120A	Pump, Elantra	1	2000	42500JC	4611028813
120A	Pump, Elantra	1	01-Up	42500JD	4611039000
120A	Pump, Accent	1	95-99	42500JA	4611022000
120A	Pump, Accent (00-L04)	1	00-04	42500LA	46110-22730
120A	Pump, Accent (L04-Up)	1	04-Up	42500LA	46110-22730
120A	Pump, F4A33, W4A33-1 (w/ 1 Ring on Input Shaft)	1	91-Up	42500M	N.L.
120A	Pump, F4A33, W4A32-1, W4A33-1 (w/ 3 Rings on Input Shaft)	1	91-Up	42500MA	N.L.
DRUMS & COMPONENTS					
134A	Direct, KM171-5, KM176-5, F4A32	1	89-Up	42555H	N.L.
134A	Direct, KM175	1	85-88	42555C	N.L.
134A	Direct, KM175-5, 177-8	1	89-Up	42555E	N.L.
134A	Direct, A4AF3	1	00-04	42555GC	4548022800
134A	Direct, A4BF3 (L04-Up)	1	04-Up	42555GC	4548022800
134A	Direct, W4A32-1 (3 Clutch) (2 Bushings In Drum)	1	91-Up	42555E	N.L.
134A	Direct, F4A33, W4A33-1 (4 Clutch) (2 Bushing In Drum)	1	91-Up	42555M	N.L.
434D	Clutch Hub, Overdrive KM177-8	1	89-Up	42570G	N.L.
PLANETS & COMPONENTS					
N.I.	PLANET KIT KM175-5	1	89-Up	42583E	N.L.
N.I.	PLANET KIT KM176-5	1	89-Up	42583J	N.L.
N.I.	PLANET KIT KM177-8 (No Groove)	1	89-Up	42583G	N.L.
N.I.	PLANET KIT KM177-8 (w/ 1 Groove)	1	89-Up	42583GA	N.L.
N.I.	PLANET KIT F4A32	1	91-Up	42583J	N.L.
N.I.	PLANET KIT F4A33, W4A33-1	1	91-Up	42583M	N.L.
N.I.	PLANET KIT W4A32-1	1	91-Up	42583GA	N.L.
ONE WAY CLUTCHES					
320C	Sprag, .570" Wide KM170, 171	1	79-88	42654B	MD955380
320C	Sprag, .620" Wide KM175, 177	1	90-Up	42654D	45783-36061
320C	Sprag, .700" Wide w/ 26 Lugs (2.930" Diameter)	1	89-Up	74658	MD711342
320C	Sprag, .700" Wide w/ 28 Lugs (3.130" Diameter)	1	91-Up	42654M	MD731785
SHELLS & SUPPORTS					
222B	Shell (12 Lugs, .500" Long) (89-Up Exc. F4A33, W4A33-1)	1	89-Up	42622H	45641-22810
222B	Shell (12 Lugs, .750" Long) (89-Up Exc. F4A33, W4A33-1)	1	89-Up	42622E	45641-28810
222B	Shell, F4A33, W4A33-1	1	91-Up	42622M	N.L.
226B	Center Support, KM171-5, 176-5 (Steel)	1	89-Up	42630H	N.L.
226B	Center Support, KM172-5, 175-5, 177-8 (Steel)	1	89-Up	42630E	N.L.
226B	Center Support, F4A32 (Steel, 1.460" Wide)	1	91-Up	42630H	N.L.

ILL.		Qty.	Year	Part #	Ref. #
SHELLS & SUPPORTS (Cont.)					
226B	Center Support, F4A33, W4A33-1 (Steel, 1.535" Wide)	1	91-Up	42630M	N.L.
226B	Center Support, W4A32-1 (Steel, 1.585" Wide)	1	91-Up	42630E	N.L.
VALVE BODIES & GOVERNORS					
508E	Valve Body Low OHM (KM Series)	1	89-Up	42740-3	N.L.
508E	Valve Body High OHM (KM Series)	1	93-Up	42740-2	N.L.
N.I.	Manual Valve, Increases Converter Charge Pressure (4 Speeds)	1	85-Up	42741M	N.L.
MISCELLANEOUS COMPONENTS					
232B	Wave Ring, Low/Reverse (5 3/16" OD) KM171, 172, 175	1	83-88	42857B	MD707399
232B	Wave Ring, Low/Reverse (5 7/16" OD) KM171-5/KM177-8	1	89-Up	42857G	MD719830
232B	Wave Ring, Low/Reverse W4A32-1	1	91-Up	42857G	MD719830
432D	Bearing & Race Package, Output Clutch to End Clutch (.160"Thick) (Hyundai)	1	00-05	42203K	45525-22800
432D	Bearing & Race Package, Output Clutch to End Clutch (.190"Thick) (Hyundai)	1	05-Up	42203AK	45525-22810
TECHNICAL MANUALS					
N.I.	Tech Manual, KM171, 172	1	79-Up	42400B	N.L.
N.I.	Tech Manual, KM175	1	85-Up	42400C	N.L.
N.I.	Tech Manual, KM177	1	87-Up	42400P	N.L.
N.I.	Tech Manual, F4A33, W4A33-1	1	91-Up	42400M	N.L.
N.I.	Tech Manual, Those Darn KM's Book 1 (ATRA)	1	91-Up	42400D	N.L.
N.I.	Tech Manual, Those Darn KM's Book 2 (ATRA)	1	91-Up	42400E	N.L.

Notes

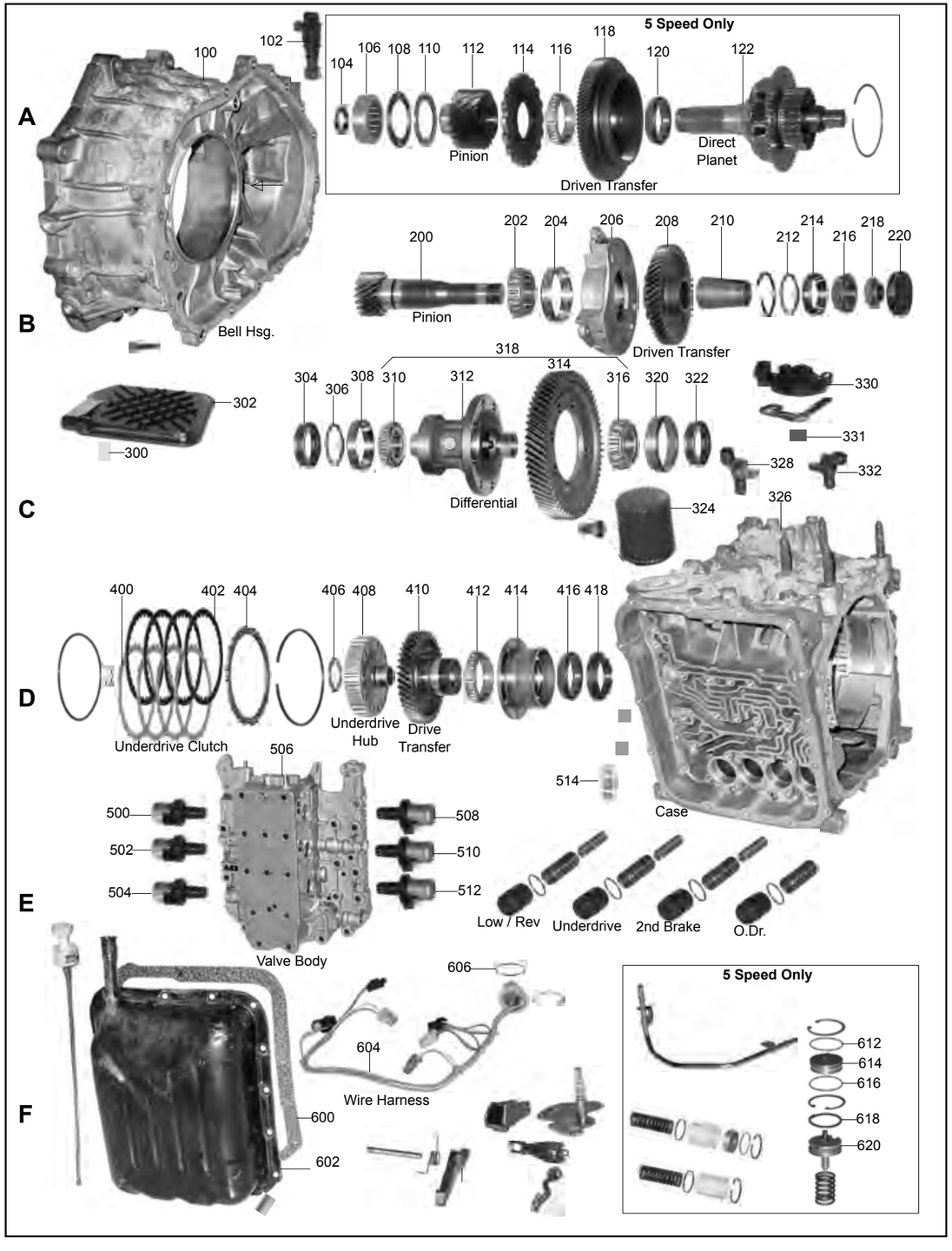
A
B
C
D
E
F
100
102
104
106
108
110
112
114
116
118
120
122
5 Speed Only
Pinion
Direct Planet
Driven Transfer
Bell Hsg.
200
202
204
206
208
210
212
214
216
218
220
Pinion
Driven Transfer
300
302
304
306
308
310
312
314
316
318
320
322
330
331
328
332
Differential
324
326
400
402
404
406
408
410
412
414
416
418
Underdrive Clutch
Underdrive Hub
Drive Transfer
514
Case
500
502
504
506
508
510
512
Valve Body
Low / Rev
Underdrive
2nd Brake
O.Dr.
600
602
604
606
Wire Harness
5 Speed Only
612
614
616
618
620

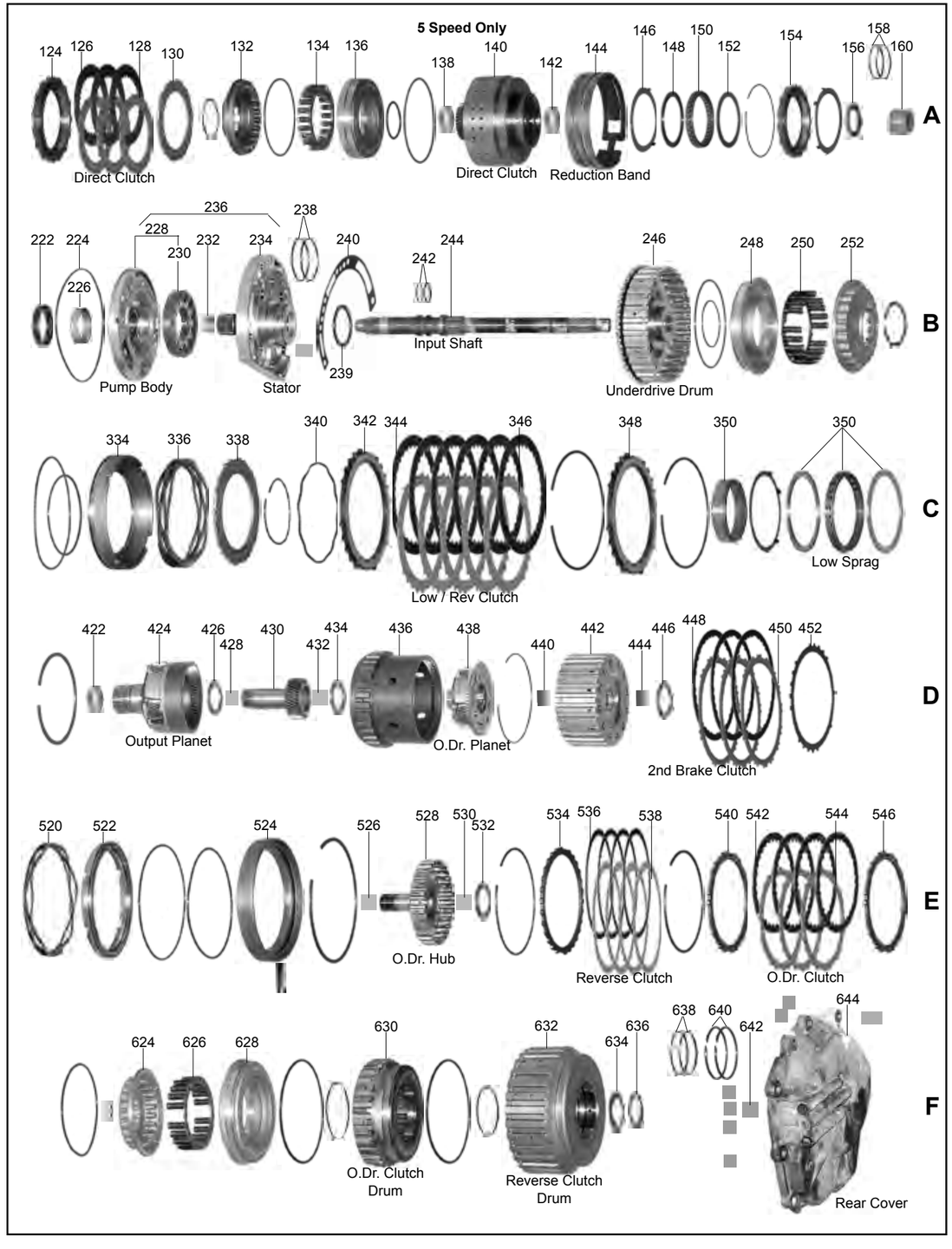
A
B
C
D
E
F
5 Speed Only
124
126
128
130
132
134
136
138
140
142
144
146
148
150
152
154
156
158
160
Direct Clutch
Direct Clutch
Reduction Band
222
224
226
228
230
232
234
236
238
240
239
242
244
246
248
250
252
Pump Body
Stator
Input Shaft
Underdrive Drum
334
336
338
340
342
344
346
348
350
Low / Rev Clutch
Low Sprag
422
424
426
428
430
432
434
436
438
440
442
444
446
448
450
452
Output Planet
O.Dr. Planet
2nd Brake Clutch
520
522
524
526
528
530
532
534
536
538
540
542
544
546
O.Dr. Hub
Reverse Clutch
O.Dr. Clutch
624
626
628
630
632
634
636
638
640
642
644
O.Dr. Clutch Drum
Reverse Clutch Drum
Rear Cover

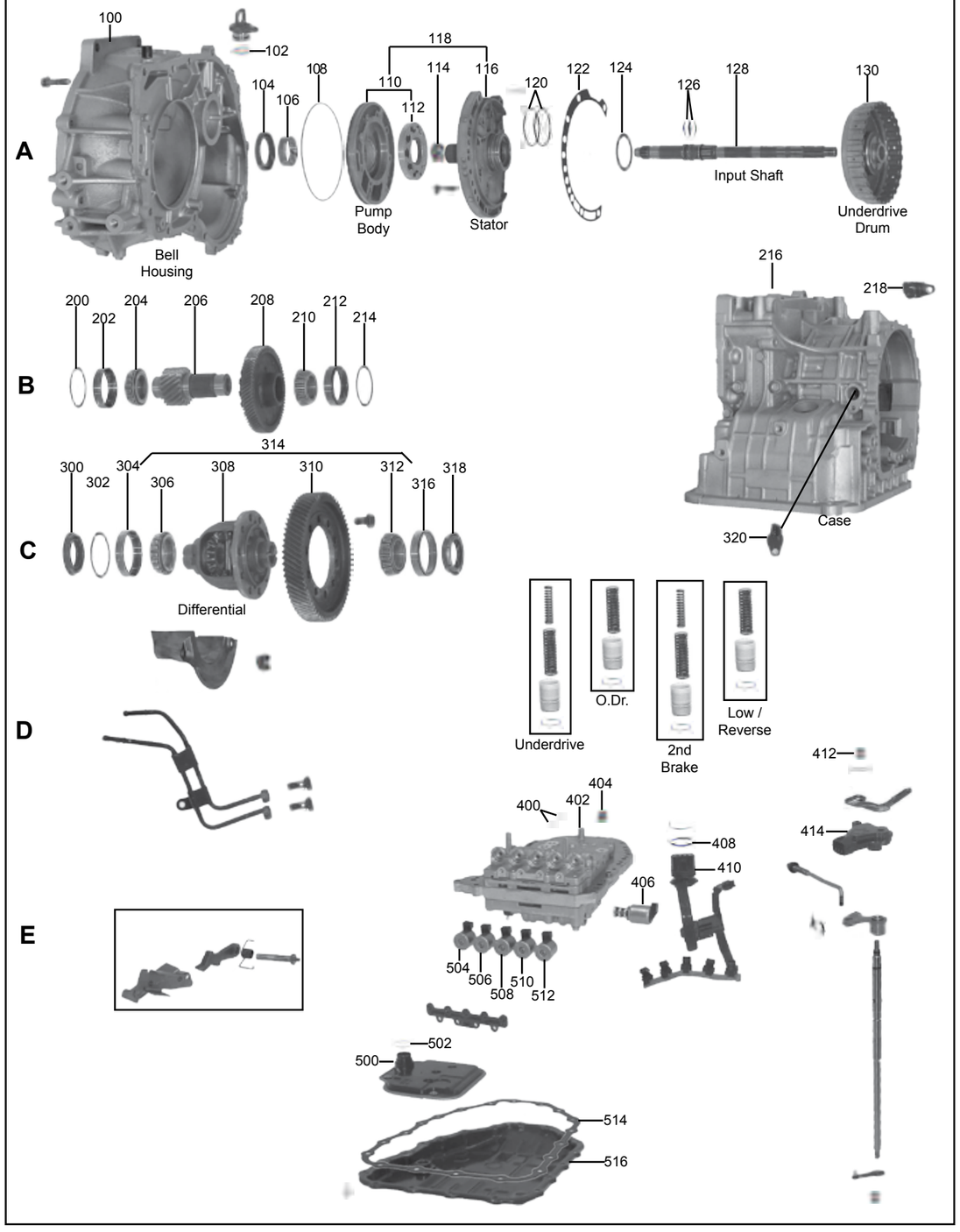
A
100
102
104
106
108
110
112
114
116
118
120
122
124
126
128
130
Bell Housing
Pump Body
Stator
Input Shaft
Underdrive Drum
B
200
202
204
206
208
210
212
214
216
218
Case
320
C
300
302
304
306
308
310
312
314
316
318
Differential
D
Underdrive
O.Dr.
2nd Brake
Low / Reverse
E
400
402
404
406
408
410
412
414
504
506
508
510
512
500
502
514
516

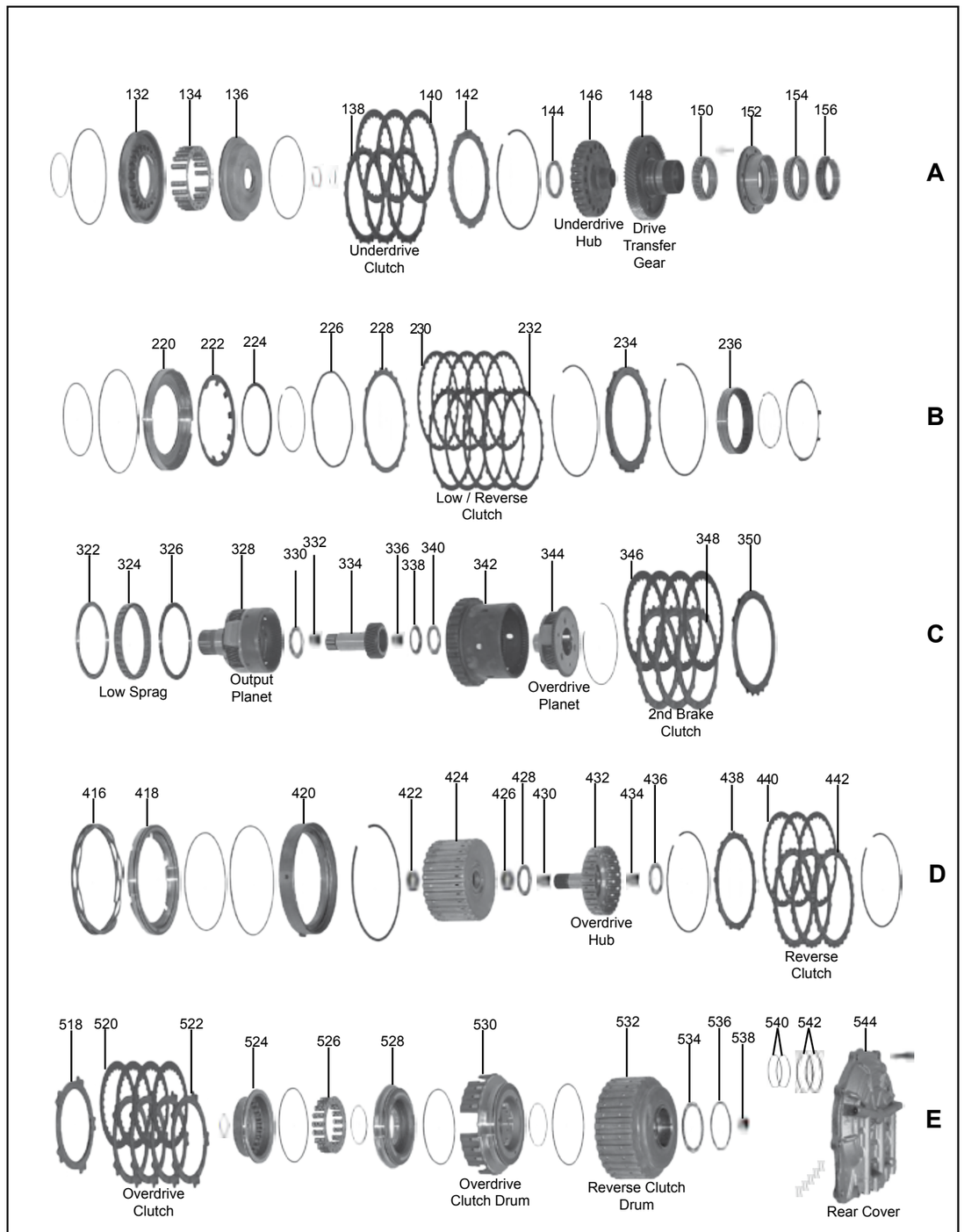
A
132
134
136
138
140
142
144
146
148
150
152
154
156
Underdrive Clutch
Underdrive Hub
Drive Transfer Gear
B
220
222
224
226
228
230
232
234
236
Low / Reverse Clutch
C
322
324
326
328
330
332
334
336
338
340
342
344
346
348
350
Low Sprag
Output Planet
Overdrive Planet
2nd Brake Clutch
D
416
418
420
422
424
426
428
430
432
434
436
438
440
442
Overdrive Hub
Reverse Clutch
E
518
520
522
524
526
528
530
532
534
536
538
540
542
544
Overdrive Clutch
Overdrive Clutch Drum
Reverse Clutch Drum
Rear Cover

F4A41, F4A51, F5A51, A4CF2, A5GF1, A5HF1

FWD
4, 5 SPEED

ILL.		Qty.	Year	Part #	Ref. #
MASTER OVERHAUL KITS (WITH STEELS)					
N.I.	F4A41, F4A42, F4A4B	1	96-Up	41006	N.L.
N.I.	F4A51, F4A5A, W4A5A	1	96-Up	41006A	N.L.
N.I.	F5A51, F5A5A	1	01-Up	41006B	N.L.
N.I.	A4CF1, A4CF2	1	06-Up	41006D	N.L.
N.I.	A5GF1	1	05-Up	51006G	N.L.
N.I.	A5HF1	1	05-Up	51006H	N.L.
MASTER OVERHAUL KITS (LESS STEELS)					
N.I.	F4A41, F4A42, F4A4B	1	96-Up	41004	N.L.
N.I.	F4A51, F4A5A, W4A5A	1	96-Up	41004A	N.L.
N.I.	F5A51, F5A5A	1	01-Up	41004B	N.L.
N.I.	A4CF1, A4CF2	1	06-Up	41004D	N.L.
N.I.	A5GF1	1	05-Up	51004G	N.L.
N.I.	A5HF1	1	05-Up	51004H	N.L.
OVERHAUL KITS (WITH RINGS AND SEALS)					
N.I.	F4A41, F4A42, F4A4B	1	96-Up	41002	N.L.
N.I.	F4A51, F4A5A, W4A5A	1	96-Up	41002A	N.L.
N.I.	F5A42	1	99-Up	41002C	N.L.
N.I.	F5A51, F5A5A	1	01-Up	41002B	N.L.
N.I.	A4CF1, A4CF2	1	06-Up	41002D	N.L.
N.I.	A5GF1	1	05-Up	51002G	N.L.
N.I.	A5HF1	1	05-Up	51002H	N.L.
GASKETS & O-RINGS					
224B	O-Ring, Pump (All)	1	96-Up	41311A	MD755373
240B	Gasket, Pump (F4A41, F4A42, F4A4B, A5GF1)	1	96-Up	41310B	MD758461
240B	Gasket, Pump (F4A51, F5A51, F5A5A, A5HF1)	1	97-Up	41310A	MD752800
240B	Gasket, Pump (A4CF1, F4AF2)	1	06-Up	41310D	N.L.
600F	Gasket, VB Cover (F4A41, F4A42)	1	96-Up	41300	N.L.
600F	Gasket, VB Cover (F4A51, F5A51, F5A5A, A5GF1, A5HF1)	1	97-Up	41300A	N.L.
N.I.	Gasket, Pan (A4CF1, A4CF2)	1	06-Up	41300D	N.L.
METAL CLAD SEALS					
222B	Front (F4A41, F4A42, F4A51, F5A51)	1	96-Up	42070A	MD707575
322C	Axle, Left (F4A41, F4A42, F4A51, F5A51)	1	96-Up	41076	MD758904
304C	Axle, Right (Exc Awd) (F4A41, F4A42, F4A51, F5A51)	1	96-Up	41076	MD758904
304C	Axle, Right (Awd) (F4A41, F4A42, F4A51, F5A51)	1	96-Up	41076A	MD758904
SEALING RINGS & KITS					
N.I.	Sealing Ring Kit (F4A41, F4A42, F4A4B, F4A51, F4A5A)	1	96-Up	41175K	N.L.
N.I.	Sealing Ring Kit (F5A51, F5A5A)	1	01-Up	41175BK	N.L.
FRICTION PLATES					
126A	Direct (F5A51)	3-5	01-Up	41106	N.L.
344C	Low/ Reverse (6.18" OD) (F4A41, F4A42)	6	96-Up	41114	45625-39000
344C	Low/ Reverse (7.03" OD) (F4A51, F5A51)	4-6	96-Up	41114A	45632-39500
402D	Underdrive (5.35" OD) (F4A41, F4A42)	3-4	96-Up	41100	45422-39000
402D	Underdrive (5.82" OD) (F4A51, F5A51)	3-4	96-Up	41100A	45525-39501
450D	2nd Brake (6.18" OD) (F4A41, F4A42)	2-3	96-Up	41104	45625-39000
450D	2nd Brake (7.03" OD) (F4A51, F5A51)	2-4	96-Up	41104A	45625-39500
536E	Reverse (5.87" OD) (F4A41, F4A42)	2	96-Up	41110	45445-39000
536E	Reverse (6.53" OD) (F4A51, F5A51)	2	96-Up	41110A	45445-39500
542E	Overdrive (5.35" OD) (F4A41, F4A42)	3-4	96-Up	41100	45422-39000
542E	Overdrive (5.82" OD) (F4A51, F5A51)	3-4	96-Up	41100A	45525-39501
N.I.	Friction Pack (A4CF1)	1	06-Up	41119D	N.L.
N.I.	Friction Pack (A5GF1)	1	05-Up	51119G	N.L.
N.I.	Friction Pack (A5HF1)	1	05-Up	51119H	N.L.
STEEL PLATES					
128A	Direct (F5A51)	3-4	01-Up	41126	N.L.
346C	Low/ Reverse (16T) (6.29" ID) (F4A51, F5A51)	3-5	96-Up	41134A	N.L.
346C	Low/ Reverse (17T) (5.54" ID) (F4A41, F4A42)	3-5	96-Up	41134	N.L.
400D	Underdrive (F4A41, F4A42)	3-4	96-Up	41122	N.L.
400D	Underdrive (F4A51, F5A51)	3-4	96-Up	41122A	N.L.
448D	2nd Brake (.079") (17T) (F4A41, F4A42)	AR	96-Up	41124C	N.L.

ILL.		Qty.	Year	Part #	Ref. #
STEEL PLATES (Cont.)					
448D	2nd Brake (.099") (16T) (F4A51, F5A51)	2	96-Up	41124A	N.L.
448D	2nd Brake (.099") (17T) (F4A41, F4A42)	1	96-Up	41124	N.L.
538E	Reverse (5.25" ID) (F4A41, F4A42)	2	96-Up	41130	N.L.
538E	Reverse (6.00" ID) (F4A51, F5A51)	2	96-Up	41130A	N.L.
544E	Overdrive (4.65" ID) (F4A41, F4A42)	3-4	96-Up	41120	N.L.
544E	Overdrive (4.85" ID) (.099") (F4A51, F5A51)	3	96-Up	41120A	N.L.
544E	Overdrive (4.85" ID) (.118") (F4A51, F5A51) (Selective)	AR	96-Up	41120B	N.L.
N.I.	Steel Pack (A4CF1)	1	06-Up	41139D	N.L.
N.I.	Steel Pack (A5GF1)	1	05-Up	51139G	N.L.
N.I.	Steel Pack (A5HF1)	1	05-Up	51139H	N.L.
PRESSURE PLATES					
348C	Low/ Reverse (F4A41, F4A42)	1	96-Up	41148	MD763673
348C	Low/ Reverse (F5A41, F5A51)	1	01-Up	41148A	MD760331
348C	Low/ Reverse (A4CF1, A4CF2)	1	06-Up	41148C	N.L.
404D	Underdrive (F4A41, F4A42)	1	96-Up	41142	N.L.
404D	Underdrive (F5A41, F5A51)	1	01-Up	41142B	N.L.
404D	Underdrive (A4CF1, A4CF2)	1	06-Up	41142C	N.L.
452D	2nd Brake (Apply) (F4A41, F4A42)	1	96-Up	41144	N.L.
452D	2nd Brake (Apply) (F5A41, F5A51)	1	01-Up	41144B	N.L.
452D	2nd Brake (Apply) (A4CF1, A4CF2)	1	06-Up	41144C	N.L.
534E	Reverse (F4A41, F4A42)	1	96-Up	41150	N.L.
534E	Reverse (F5A41, F5A51)	1	01-Up	41150B	N.L.
534E	Reverse (A4CF1, A4CF2)	1	06-Up	41150C	N.L.
540E	Overdrive (F4A41, F4A42)	1	96-Up	41140	N.L.
540E	Overdrive (F4A51, F5A51) (.235" Thick)	1	96-Up	41140B	N.L.
540E	Overdrive (A4CF1, A4CF2)	1	06-Up	41140C	N.L.
FILTERS					
302C	Hyundai (F4A41, F4A42, F4A51, F4A52), (A5GF1, A5HF1)	1	99-Up	41010B	46321-39010
302C	Chrysler, Mitsubishi (F4A41, F4A42)	1	96-Up	41010	MD758691
302C	Chrysler, Mitsubishi (F4A51, F5A51) (96-4/99)	1	96-E99	41010A	MD758684
302C	Chrysler, Mitsubishi (F4A51, F5A51) (5/99-Up)	1	L99-Up	41010C	MR350441
302C	A4CF1, A4CF2	1	06-Up	41010D	N.L.
324C	Filter, Spin On (F4A41, F4A42, F4A51)	1	99-Up	41013	MD752072
BANDS					
144A	Reduction Band (F5A51 Only)	1	01-Up	142026	MD762016
BUSHINGS					
N.I.	Bushing Kit (F4A41, F4A42)	1	96-Up	41030	N.L.
N.I.	Bushing Kit (F4A51)	1	96-Up	41030A	N.L.
226B	Pump Bushing (F4A41, F4A42, F4A51, F5A51)	1	96-Up	41034	N.L.
THRUST WASHERS/BEARINGS					
WASHERS					
239B	Pump (F4A41, F4A42)	1	96-Up	41211	N.L.
BEARINGS					
N.I.	Bearing Kit (F4A41, F4A42)	1	96-Up	41201	N.L.
N.I.	Bearing Kit (F4A51, F5A51)	1	96-Up	41201A	N.L.
ELECTRICAL COMPONENTS					
328C	Sensor, Input Speed (TSS) (F4A41, F4A42, F4A51, F5A51)	1	96-Up	41438	42620-39200
332C	Sensor, Output Speed (VSS) (Hyundai) (F4A41, F4A42, F4A51, F5A51)	1	96-Up	41436	42621-39200
500E	Solenoid, Shift (F4A41, F4A42, F4A51, F5A51)	5-6	96-Up	41421	MD758981
604F	Harness, Internal (F4A41, F4A42) (Units w/o VFS)	1	96-05	41446A	MD759284
604F	Harness, Internal (F4A41, F4A42) (Units w/ VFS)	1	05-Up	41446B	MN171613
604F	Harness, Internal (F5A51) (Units w/o VFS)	1	01-E05	41446C	46308-39550
604F	Harness, Internal (F5A51) (Units w/ VFS)	1	05-Up	41446D	T41446CA
N.I.	Solenoid, VFS (EPC) (F4A41, F4A42, F4A51, F5A51)	1	05-Up	41431	N.L.
N.I.	Sensor, Transmission Oil Temperature (TOT) (F4A41, F4A42, F4A51, F5A51)	1	96-Up	41437	MD755848

ILL.		Qty.	Year	Part #	Ref. #
PUMPS					
236B	Pump Assembly (F4A41, F4A42)	1	96-Up	41500A	MR593521
236B	Pump Assembly (F4A51, F5A51)	1	96-Up	41500B	MD763202
236B	Pump Assembly (A4CF1, A4CF2)	1	06-Up	41500C	N.L.
PUMP COMPONENTS					
230B	Pump Gears (A4CF1, A4CF2)	1	06-Up	41530C	N.L.
230B	Pump Gears (F4A41, F4A51, F5A42, F5A51)	1	96-Up	41530A	N.L.
DRUMS & COMPONENTS					
140A	Drum, Direct (F5A51)	1	01-Up	41555	N.L.
246B	Drum, Underdrive (3 Clutch) (F4A41, F4A42)	1	96-Up	41551	N.L.
246B	Drum, Underdrive (4 Clutch) (F4A41, F4A42)	1	96-Up	41551AA	N.L.
246B	Drum, Underdrive (4 Clutch) (F4A51, F5A51)	1	96-Up	41551A	N.L.
246B	Drum, Underdrive (A4CF1, A4CF2)	1	06-Up	41551C	N.L.
248B	Piston, Underdrive (F4A41, F4A42) (5.355" OD)	1	96-Up	41961	N.L.
248B	Piston, Underdrive (F5A41, F5A51) (5.670" OD)	1	01-Up	41961A	N.L.
248B	Piston, Underdrive (A4CF1, A4CF2)	1	06-Up	41961C	N.L.
250B	Return Spring, Underdrive (F4A41, F4A42)	1	96-Up	41971	N.L.
250B	Return Spring, Underdrive (F5A41, F5A51)	1	01-Up	41971A	N.L.
250B	Return Spring, Underdrive (A4CF1, A4CF2)	1	06-Up	41971C	N.L.
252B	Retainer, Underdrive (F4A41, F4A42)	1	96-Up	41981	N.L.
252B	Retainer, Underdrive (F5A41, F5A51)	1	01-Up	41981A	N.L.
252B	Retainer, Underdrive (A4CF1, A4CF2)	1	06-Up	41981C	N.L.
334C	Piston, Low/ Reverse (F4A41, F4A42) (.655")	1	96-Up	41967B	N.L.
334C	Piston, Low/ Reverse (F4A41, F4A42) (.845")	1	96-Up	41967A	N.L.
334C	Piston, Low/ Reverse (F4A41, F4A42) (.925")	1	96-Up	41967	N.L.
334C	Piston, Low/ Reverse (F4A51) (.655")	1	96-Up	41967B	N.L.
334C	Piston, Low/ Reverse (F5A41, F5A51) (.850")	1	01-Up	41967D	N.L.
334C	Piston, Low/ Reverse (F5A41, F5A51) (.970")	1	01-Up	41967C	N.L.
334C	Piston, Low/ Reverse (A4CF1, A4CF2)	1	06-Up	41967E	N.L.
336C	Return Spring, Low/ Reverse (F4A41, F4A42) (5.500" OD)	1	96-Up	41977	N.L.
336C	Return Spring, Low/ Reverse (F5A41, F5A51) (6.500" OD)	1	01-Up	41977A	N.L.
336C	Return Spring, Low/ Reverse (A4CF1, A4CF2)	1	06-Up	41977C	N.L.
338C	Retainer, Low/ Reverse (F4A41, F4A42)	1	96-Up	41987	N.L.
408D	Hub, Underdrive (4.515" OD) (F4A41, F4A42)	1	96-Up	41571	N.L.
408D	Hub, Underdrive (4.715" OD) (F4A51, F5A51)	1	96-Up	41571A	N.L.
408D	Hub, Underdrive (A4CF1, A4CF2)	1	06-Up	41571C	N.L.
442D	Hub, 2nd (4.995" OD) (F4A41, F4A42)	1	96-Up	41572	N.L.
442D	Hub, 2nd (5.900" OD) (F4A51, F5A51)	1	96-Up	41572A	N.L.
442D	Hub, 2nd (A4CF1, A4CF2)	1	06-Up	41572C	N.L.
520E	Return Spring, 2nd (F4A41, F4A42) (6.800" OD)	1	96-Up	41972	N.L.
520E	Return Spring, 2nd (F5A41, F5A51) (7.650" OD)	1	01-Up	41972A	N.L.
520E	Return Spring, 2nd (A4CF1, A4CF2)	1	06-Up	41972C	N.L.
522E	Piston, 2nd (F4A41, F4A42) (.690") (6.650" OD)	1	96-Up	41962	N.L.
522E	Piston, 2nd (F5A41, F5A51) (.655") (7.500" OD)	1	01-Up	41962A	N.L.
522E	Piston, 2nd (F5A41, F5A51) (.735") (7.500" OD)	1	01-Up	41962B	N.L.
522E	Piston, 2nd (A4CF1, A4CF2)	1	06-Up	41962C	N.L.
528E	Hub, Overdrive (4.650" OD) (F4A41, F4A42)	1	96-Up	41570	N.L.
528E	Hub, Overdrive (4.760" OD) (F4A51, F5A51)	1	96-Up	41570A	N.L.
528E	Hub, Overdrive (A4CF1, A4CF2)	1	06-Up	41570C	N.L.
624F	Retainer, Overdrive (F4A41, F4A42) (4.950" OD)	1	96-Up	41980	N.L.
624F	Retainer, Overdrive (F5A41, F5A51) (5.500" OD)	1	01-Up	41980A	N.L.
624F	Retainer, Overdrive (A4CF1, A4CF2)	1	06-Up	41980C	N.L.
626F	Return Spring, Overdrive (F4A41, F4A42)	1	96-Up	41970	N.L.
626F	Return Spring, Overdrive (F5A41, F5A51)	1	01-Up	41970A	N.L.
626F	Return Spring, Overdrive (A4CF1, A4CF2)	1	06-Up	41970C	N.L.
628F	Piston, Overdrive (F4A41, F4A42) (Cast 500747)	1	96-Up	41960	N.L.
628F	Piston, Overdrive (F5A41, F5A51) (Cast 500754)	1	01-Up	41960A	N.L.
628F	Piston, Overdrive (A4CF1, A4CF2)	1	06-Up	41960C	N.L.
630F	Drum, Overdrive (3 Clutch) (F4A41, F4A42)	1	96-00	41550	N.L.
630F	Drum, Overdrive (4 Clutch) (F4A41, F4A42)	1	01-Up	41550A	N.L.
630F	Drum, Overdrive (4 Clutch) (F4A51, F5A51)	1	96-Up	41550B	N.L.
630F	Drum, Overdrive (A4CF1, A4CF2)	1	06-Up	41550C	N.L.
632F	Drum, Reverse (6.25" OD) (F4A41, F4A42)	1	96-Up	41556	N.L.
632F	Drum, Reverse (7.00" OD) (F4A51, F5A51)	1	96-Up	41556A	N.L.
632F	Drum, Reverse (A4CF1, A4CF2)	1	06-Up	41556C	N.L.

ILL.		Qty.	Year	Part #	Ref. #
PLANETS & COMPONENTS					
122A	Planet, Direct (F5A51)	1	01-Up	41586	N.L.
424D	Planet, Reaction (F4A41, F4A42)	1	96-Up	41584	N.L.
424D	Planet, Reaction (F4A51)	1	96-Up	41584A	N.L.
424D	Planet, Reaction (F5A51)	1	01-Up	41584B	N.L.
424D	Planet, Reaction (A4CF1, A4CF2)	1	06-Up	41584C	N.L.
436D	Ring Gear, Rear (Non Sprag Type) (F4A41, F4A42)	1	96-Up	41594	N.L.
436D	Ring Gear, Rear (Non Sprag Type) (F4A51)	1	96-Up	41594B	N.L.
436D	Ring Gear, Rear (Sprag Type) (F4A41, F4A42)	1	96-Up	41594A	N.L.
436D	Ring Gear, Rear (Sprag Type) (F4A51, F5A51)	1	96-Up	41594C	N.L.
436D	Ring Gear, Rear (A4CF1, A4CF2)	1	06-Up	41594D	N.L.
438D	Planet, Input (F4A41, F4A42) (18T Pinion Gears)	1	96-Up	41582	N.L.
438D	Planet, Input (F4A51, F5A51) (21T Pinion Gears)	1	96-Up	41582A	N.L.
438D	Planet, Input (A4CF1, A4CF2)	1	06-Up	41582C	N.L.
SUN GEARS					
430D	Sun Gear, Front (F4A41, F4A42)	1	96-Up	41614	N.L.
430D	Sun Gear, Front (F4A51)	1	96-Up	41614A	N.L.
430D	Sun Gear, Front (F5A51)	1	01-Up	41614B	N.L.
430D	Sun Gear, Front (A4CF1, A4CF2)	1	06-Up	41614C	N.L.
ONE WAY CLUTCHES					
150A	Sprag Assembly, Underdrive (F5A51)	1	01-Up	41644	N.L.
350C	Sprag Assembly, Low (F4A41, F4A42)	1	96-Up	41642	N.L.
350C	Sprag Assembly, Low (F4A51, F5A51)	1	96-Up	41642B	N.L.
350C	Sprag Assembly, Low (A4CF1, A4CF2)	1	06-Up	41642C	N.L.
SHAFTS					
244B	Input (13 1/4") (F4A41, F4A42)	1	96-Up	41670	N.L.
244B	Input (15 1/8") (3 Holes) (F4A51)	1	96-Up	41670A	N.L.
244B	Input (15 1/8") (4 Holes) (F5A51)	1	01-Up	41670B	N.L.
244B	Input (A4CF1, A4CF2)	1	06-Up	41670C	N.L.
VALVE BODIES & GOVERNORS					
506E	Valve Body (5 Solenoids) (F4A41, F4A42, F4A51)	1	96-Up	41740-1	N.L.
506E	Valve Body (6 Solenoids) (F5A51)	1	01-Up	41740-2	N.L.
506E	Valve Body (A4CF1, A4CF2)	1	06-Up	41740-5	N.L.
DIFFERENTIALS					
200B	Pinion Gear w/ Shaft (F4A41, F4A42) (18T)	1	96-Up	41730	N.L.
200B	Pinion Gear w/ Shaft (F4A41, F4A42) (19T)	1	96-Up	41730A	N.L.
200B	Pinion Gear w/ Shaft (F5A41) (20T)	1	01-Up	41730C	N.L.
200B	Pinion Gear w/ Shaft (F5A41) (21T, 1 groove)	1	01-Up	41730B	N.L.
200B	Pinion Gear w/ Shaft (F5A51) (21T, No groove)	1	01-Up	41730D	N.L.
200B	Pinion Gear w/ Shaft (A4CF1, A4CF2)	1	06-Up	41730E	N.L.
318C	Differential (F4A42)	1	96-Up	41715K	N.L.
CASES/HOUSINGS & COMPONENTS					
602F	Side Cover (F4A41, F4A42) (1.875" Dipstick Tube)	1	96-Up	41766	N.L.
602F	Side Cover (F4A41, F4A42) (3.500" Dipstick Tube)	1	96-Up	41766A	N.L.
602F	Side Cover (F4A51) (1.000" Dipstick Tube)	1	96-Up	41766B	N.L.
602F	Side Cover (F4A51) (3.500" Dipstick Tube)	1	96-Up	41766BA	N.L.
602F	Side Cover (F5A51) (2.125" Dipstick Tube)	1	01-Up	41766C	N.L.
644F	Rear Cover (10 Bolt) (F4A41 (F4A42)	1	96-Up	41759AA	N.L.
644F	Rear Cover (10 Bolt) (F4A51)	1	96-Up	41759A	N.L.
644F	Rear Cover (12 Bolt) (F4A41 (F4A42)	1	96-Up	41759	N.L.
644F	Rear Cover (12 Bolt) (F4A51)	1	96-Up	41759AC	N.L.
644F	Rear Cover (14 Bolt) (F5A51)	1	01-Up	41759B	N.L.
644F	Rear Cover (A4CF1, A4CF2)	1	06-Up	41759C	N.L.
N.I.	Pan (A4CF1, A4CF2)	1	06-Up	41765D	N.L.
MISCELLANEOUS COMPONENTS					
208B	Transfer Gear, Driven (F4A41, F4A42) (47T)	1	96-Up	41712	N.L.
208B	Transfer Gear, Driven (F4A41, F4A42) (75T) (No groove)	1	96-Up	41712A	N.L.
208B	Transfer Gear, Driven (F4A41, F4A42) (75T) (1 Groove)	1	96-Up	41712B	N.L.
208B	Transfer Gear, Driven (F4A51) (83T)	1	96-Up	41712C	N.L.
208B	Transfer Gear, Driven (F5A51) (89T)	1	01-Up	41712D	N.L.

F4A41, F4A51, F5A51, A4CF2, A5GF1, A5HF1

ILL.		Qty.	Year	Part #	Ref. #
MISCELLANEOUS COMPONENTS (Cont.)					
208B	Transfer Gear, Driven (A4CF1, A4CF2)	1	06-Up	41712E	N.L.
340C	Wave Ring, Low/ Reverse (F4A42)	1	98-05	41857	MD761393
340C	Wave Ring, Low/ Reverse (F4A51, F5A51) (HD Update)	1	96-Up	41857A	2741A007
410D	Output Gear, Drive (F4A41, F4A42) (42T)	1	96-Up	41710	N.L.
410D	Output Gear, Drive (F4A41, F4A42) (49T)	1	96-Up	41710A	N.L.
410D	Output Gear, Drive (F4A41, F4A42) (67T)	1	96-Up	41710B	N.L.
410D	Output Gear, Drive (F4A51) (70T)	1	96-Up	41710C	N.L.
410D	Output Gear, Drive (F5A51) (75T)	1	01-Up	41710D	N.L.
410D	Output Gear, Drive (A4CF1, A4CF2)	1	06-Up	41710E	N.L.
414D	Support, Output Gear (F4A41, F4A42)	1	96-Up	41711	N.L.
414D	Support, Output Gear (F5A41, F5A51)	1	01-Up	41711A	N.L.
414D	Support, Output Gear (A4CF1, A4CF2)	1	06-Up	41711C	N.L.
SERVOS & ACCUMULATORS					
620F	Servo Assembly, Underdrive (F5A51)	1	01-Up	41905	N.L.
N.I.	Accumulator Assembly, 2nd (F4A51, F5A51)	1	96-Up	41925	N.L.
N.I.	Accumulator Assembly, Direct (F5A51)	1	01-Up	41930	N.L.
N.I.	Accumulator Assembly, Overdrive (F4A51, F5A51)	1	96-Up	41935	N.L.
TECHNICAL MANUALS					
N.I.	Technical Manual (F4A41, F4A42, F4A51) (ATSG)	1	96-Up	41400	N.L.
N.I.	Diagnostic Guide (Kia, Hyundai) (A4CF2) (ATSG)	1	96-Up	41400DT	N.L.

Notes

TK TOLEDO TRANS-KIT · BRYCO · ProSELECT · RoadMaster

SEAL AFTERMARKET PRODUCTS
your source for engineered solutions

PRODUCT ANNOUNCEMENT

A4CF1/2 (4 Speed FWD) 2006-Up

Seal Aftermarket Products now has the complete Overhaul Kit for the A4CF1/2 transmission series covering 2006-Up.
Please call your Sales Representative for pricing and availability

Innovative Engineered Solutions

- Plastic & PTFE Sealing Rings
- Valve Body Screen Filter included



Vehicle Coverage

Hyundai
- ►Accent 2006-11
- ►Avante HD/MD 2006-11
- ►Avega 2011
- ►Elantra 2006-11

Kia
- ►Forte 2008-10
- ►Spectra 2006-09
- ►Soul 2010-11

Rebuild Kits

Available September 13th
41002DX - Overhaul Kit A4CF1/2 2006-Up

Available with 5 day lead-time
41004DX - Master L/Steels Kit A4CF1/2 2006-Up
41006DX - Master W/Steels Kit A4CF1/2 2006-Up
41119D - Friction Module A4CF1/2 2006-Up
31139D - Steel Module A4CF1/2 2006-Up

Available November
41030D - Bushing Kit A4CF1/2 2006-Up (8 Bushings)



Components



41031
Bushing A4CF1/2 Converter 2006-Up



41032
Bushing A4CF1/2 Input Shaft 2006-Up



41034
Bushing A4CF1/2 Reverse Clutch Hub 2006-Up



28366
Bushing A4CF1/2 Overdrive & Underdrive Sungear 2006-Up

Release Date 9/12/2013

Sales Policy: All shipments are FCA Pembroke Park. Price and Availability subject to change
© 2013 Seal Aftermarket Products LLC. ALL RIGHTS RESERVED. Possession of price list does not constitute offer to sell
Disclaimer - All information has been checked for accuracy, however no liability can be assumed for errors and omissions

Seal Aftermarket Products LLC · 2315 SW 32nd Avenue · Pembroke Park FL 33023 · [P] (800) 582-2760 · [F] 954-364-2401 · www.sealaftermarketproducts.com

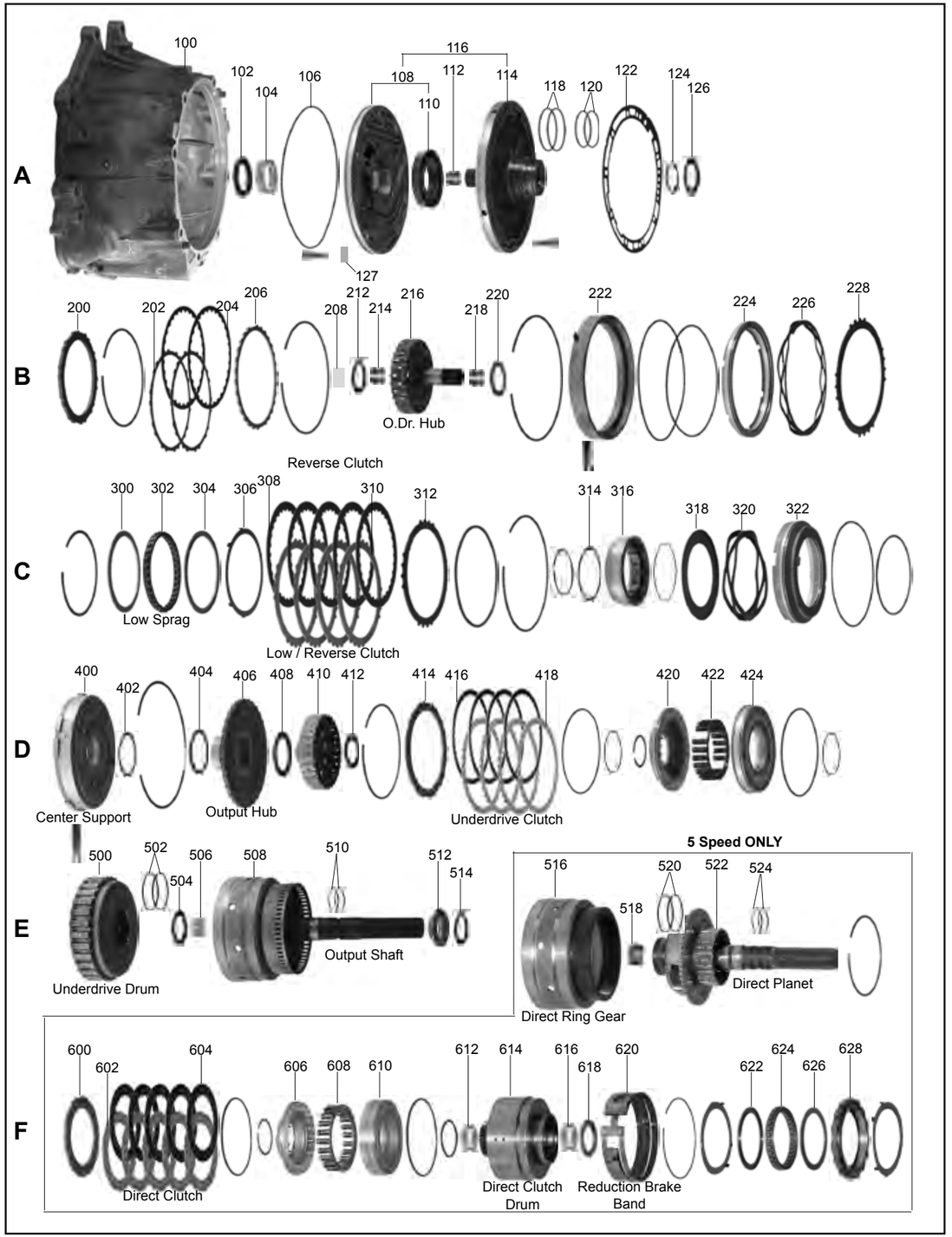
A
B
C
D
E
F
100
102
104
106
108
110
112
114
116
118
120
122
124
126
127
200
202
204
206
208
210
212
214
216
218
220
222
224
226
228
O.Dr. Hub
Reverse Clutch
300
302
304
306
308
310
312
314
316
318
320
322
Low Sprag
Low / Reverse Clutch
400
402
404
406
408
410
412
414
416
418
420
422
424
Center Support
Output Hub
Underdrive Clutch
500
502
504
506
508
510
512
514
Underdrive Drum
Output Shaft
5 Speed ONLY
516
518
520
522
524
Direct Ring Gear
Direct Planet
600
602
604
606
608
610
612
614
616
618
620
622
624
626
628
Direct Clutch
Direct Clutch Drum
Reduction Brake Band

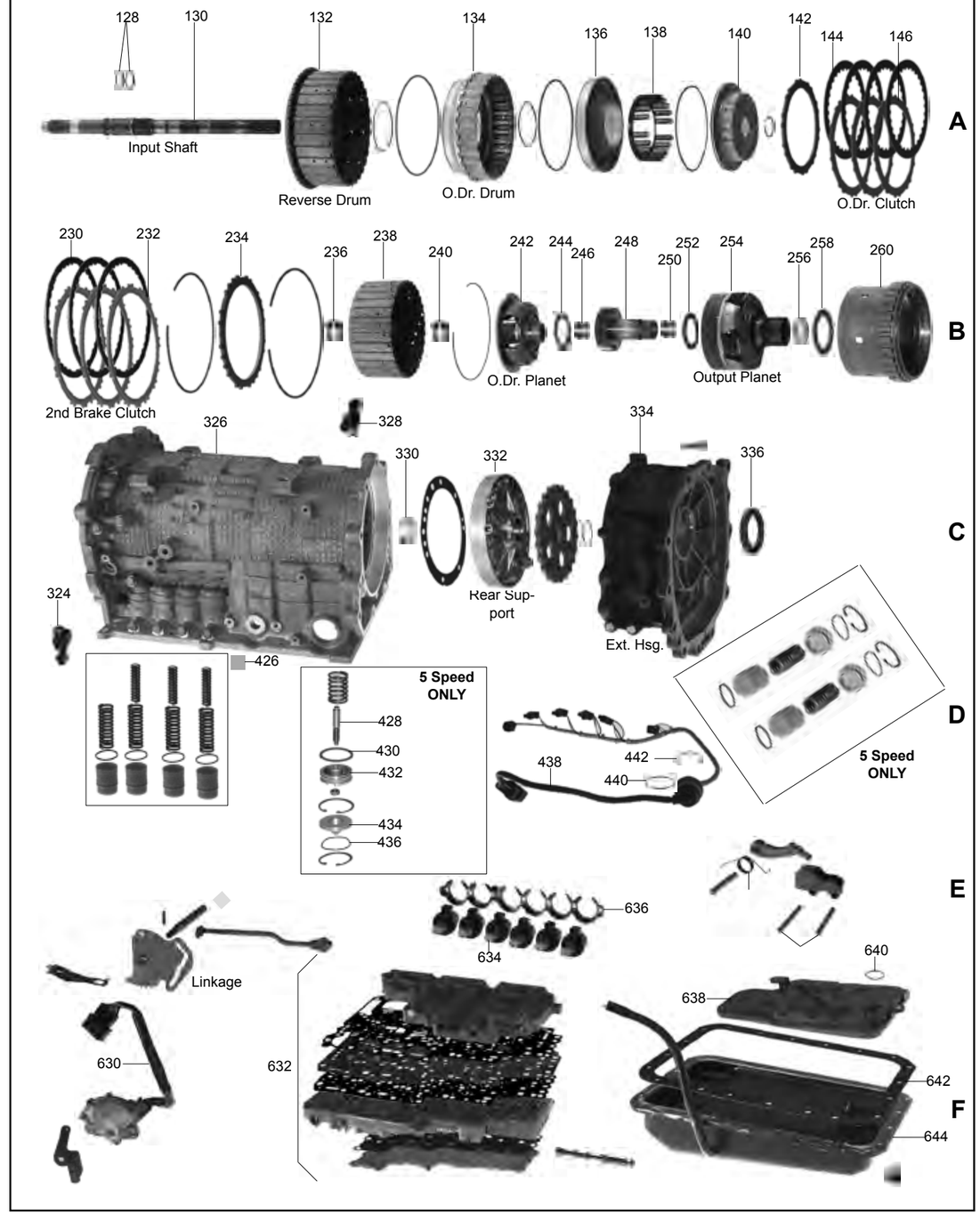
A
B
C
D
E
F
128
130
132
134
136
138
140
142
144
146
Input Shaft
Reverse Drum
O.Dr. Drum
O.Dr. Clutch
230
232
234
236
238
240
242
244
246
248
250
252
254
256
258
260
2nd Brake Clutch
O.Dr. Planet
Output Planet
326
328
330
332
334
336
324
Rear Support
Ext. Hsg.
426
5 Speed ONLY
428
430
432
434
436
438
440
442
5 Speed ONLY
Linkage
630
632
634
636
638
640
642
644

ILL.		Qty.	Year	Part #	Ref. #
MASTER OVERHAUL KITS (WITH STEELS)					
N.I.	R4A51, V4A51	1	99-Up	142006	N.L.
N.I.	R5A51, V5A51	1	01-Up	142006A	N.L.
MASTER OVERHAUL KITS (LESS STEELS)					
N.I.	R4A51, V4A51	1	99-Up	142004	N.L.
N.I.	R5A51, V5A51	1	01-Up	142004A	N.L.
OVERHAUL KITS (WITH RINGS AND SEALS)					
N.I.	R4A51, V4A51, R5A51, V5A51	1	99-Up	142002	N.L.
GASKETS & O-RINGS					
106A	O-Ring, Pump	1	99-Up	142311A	MR176814
122A	Gasket, Pump	1	99-Up	142310A	MR195630
642F	Gasket, Pan	1	99-Up	142300	N.L.
METAL CLAD SEALS					
102A	Front	1	99-Up	42070A	MD707575
336C	Extension Housing (2wd)	1	99-Up	57074J	MD951482
336C	Adapter Housing (4wd)	1	99-Up	142074	MR350599
FRICTION PLATES					
144A	Overdrive	4	99-Up	41100A	45525-39501
204B	Reverse	2	99-Up	41110A	45445-39500
230B	2nd Brake	4	99-Up	41104A	45625-39500
308C	Low/ Reverse	5-6	99-Up	41114A	45632-39500
416D	Underdrive	4	99-Up	41100A	45525-39501
604F	Direct (5 Speed)	3-5	01-Up	41106	N.L.
STEEL PLATES					
146A	Overdrive	3	99-Up	41120A	N.L.
202B	Reverse	2	99-Up	41130A	N.L.
232B	2nd Brake	3	99-Up	142124	N.L.
310C	Low/ Reverse	4-5	99-Up	41134A	N.L.
418D	Underdrive	4	99-Up	41122A	N.L.
602F	Direct (5 Speed)	3-4	01-Up	41126	N.L.
FILTERS					
638F	Filter (Flat Pickup Tube)	1	99-Up	142010	MR357710
638F	Filter (.500" Pickup Tube)	1	01-Up	142010A	MR528836
FILTER KITS					
N.I.	Filter (Flat Pickup Tube)	1	99-Up	142011	N.L.
N.I.	Filter (.500" Pickup Tube)	1	01-Up	142011A	N.L.
BANDS					
620F	Band, Reduction	1	99-Up	142026	MD762016
BUSHINGS					
N.I.	Bushing Kit	1	99-Up	142030	N.L.
104A	Pump Bushing	1	99-Up	41034	N.L.
ELECTRICAL COMPONENTS					
324C	Sensor, Input Speed (TSS)	1	99-Up	41438	42620-39051
328C	Sensor, Output Speed (VSS) (R4A41, R5A51) (99-6/01)	1	99-01	41436	42621-39200
328C	Sensor, Output Speed (VSS) (R4A41, R5A51) (6/01-Up)	1	01-Up	142436	MR518300
328C	Sensor, Output Speed (VSS) (V4A51)	1	00-Up	142436A	N.L.
328C	Sensor, Output Speed (VSS) (V5A51)	1	00-Up	142436B	N.L.
438D	Harness, Internal (w/o TOT Sensor) (R4A51)	1	99-01	142446A	N.L.
438D	Harness, Internal (w/ TOT Sensor) (R4A51)	1	01-Up	142446B	N.L.
438D	Harness, Internal (w/o TOT Sensor) R5A51)	1	99-01	142446C	MR222922
438D	Harness, Internal (w/ TOT Sensor) (R5A51)	1	01-Up	142446D	MR528945
634F	Solenoid, All (req 5-6)	5-6	99-Up	41421	MD758981
N.I.	Sensor, Transmission Oil Temperature (TOT)	1	99-01	41437	MD755848

ILL.		Qty.	Year	Part #	Ref. #
PUMPS					
116A	Pump (R4A51, V4A51)	1	99-Up	142500A	N.L.
116A	Pump (R5A51, V5A51)	1	01-Up	142500	N.L.
DRUMS & COMPONENTS					
132A	Reverse w/ Input Shaft (R4A51)	1	99-Up	142556K	N.L.
132A	Reverse w/ Input Shaft (R5A51, V5A51)	1	01-Up	142556A	N.L.
216B	Hub, Overdrive	1	99-Up	142570	N.L.
238B	Hub, 2nd (with Sun Gear)	1	99-Up	142572	N.L.
406D	Hub, Output	1	99-Up	142578	N.L.
410D	Hub, Underdrive	1	99-Up	142571	N.L.
500E	Underdrive	1	99-Up	142551	N.L.
614F	Direct (R5A51, V5A51)	1	01-Up	142555	N.L.
PLANETS & COMPONENTS					
242B	Planet, Overdrive	1	99-Up	142580	N.L.
254B	Planet, Rear (17T Gears)	1	99-Up	142584	N.L.
254B	Planet, Rear (15T Gears)	1	99-Up	142584A	N.L.
260B	Ring Gear, Rear	1	99-Up	142594	N.L.
516E	Ring Gear, Direct (R5A51, V5A51)	1	99-Up	142596	N.L.
522E	Planet, Direct (R5A51, V5A51)	1	99-Up	142586	N.L.
SUN GEARS					
248B	Sun Gear, Rear (38T)	1	99-Up	142614	N.L.
248B	Sun Gear, Rear (42T)	1	99-Up	142614A	N.L.
ONE WAY CLUTCHES					
302C	Sprag, Low	1	99-Up	82654	MD763676
624F	Sprag, Direct	1	99-Up	142656	MR176716
SHELLS & SUPPORTS					
332C	Support, Rear (w/ Bushing)	1	99-Up	142634	N.L.
332C	Support, Rear (No Bushing)	1	99-Up	142634A	N.L.
400D	Support, Center	1	99-Up	142632	N.L.
SHAFTS					
130A	Input Shaft	1	99-Up	142670	N.L.
508E	Output Shaft (2wd)	1	99-Up	142678	N.L.
508E	Output Shaft (4wd)	1	99-Up	142678A	N.L.
VALVE BODIES & GOVERNORS					
632F	Valve Body (5 Solenoid) (Cast 991228)	1	99-Up	142740A	N.L.
632F	Valve Body (6 Solenoid) (Cast 991222)	1	99-Up	142740	N.L.
CASES/HOUSINGS & COMPONENTS					
100A	Bell Housing	1	99-Up	142750	N.L.
326C	Case (Cast R4A51, V4A51)	1	99-02	142760	N.L.
326C	Case (Cast R5A51, V5A51)	1	01-Up	142760A	N.L.
334C	Extension Housing (4wd) (Cast 500 949)	1	99-Up	142770	N.L.
644F	Pan, Bottom	1	99-Up	142765	N.L.
TECHNICAL MANUALS					
N.I.	Technical Manual (ATSG)	1	99-Up	142400	N.L.

RL3F01A

FWD
3 SPEED

ILL.		Qty.	Year	Part #	Ref. #
MASTER OVERHAUL KITS (WITH STEELS)					
N.I.	RN3F01A, RL3F01A (w/ .071 Fwd and Direct Frictions)	1	81-92	43006	N.L.
N.I.	RN3F01A, RL3F01A (w/ .063 Fwd and Direct Frictions)	1	81-92	43006A	N.L.
MASTER OVERHAUL KITS (LESS STEELS)					
N.I.	RN3F01A, RL3F01A (w/ .071 Fwd and Direct Frictions)	1	81-92	43004	N.L.
N.I.	RN3F01A, RL3F01A (w/ .063 Fwd and Direct Frictions)	1	81-92	43004A	N.L.
OVERHAUL KITS (WITH RINGS AND SEALS)					
N.I.	RN3F01A, RL3F01A	1	81-92	43002	N.L.
GASKETS & O-RINGS					
N.I.	Pan Gasket	1	81-92	43300	N.L.
METAL CLAD SEALS					
N.I.	Front	1	81-92	43070	N.L.
N.I.	Axle (Both Sides)	2	81-92	43076	N.L.
N.I.	Speedo Gear Shaft	1	81-92	43078	N.L.
SEALING RINGS & KITS					
N.I.	Ring Kit	1	81-92	43175K	N.L.
FRICTION PLATES					
N.I.	Forward & Direct (.071) (Non Turbo)	6	81-92	43106	N.L.
N.I.	Forward & Direct (.061) (Turbo)	7	81-92	43106A	N.L.
N.I.	Low/Reverse	3-5	81-92	43114	N.L.
STEEL PLATES					
N.I.	Forward & Direct (12 T)	5-7	81-92	43126	N.L.
N.I.	Forward & Direct (24T)	AR	81-92	93126AA	N.L.
N.I.	Low/Reverse	3-5	81-92	43134	N.L.
FILTERS					
N.I.	Shallow (1/4" Pick Up)	1	81-86	43010	N.L.
N.I.	Deep (3/4" Pick Up)	1	87-92	43010A	N.L.
FILTER KITS					
N.I.	Shallow (1/4" Pick Up)	1	81-86	43011	N.L.
N.I.	Deep (3/4" Pick Up)	1	87-92	43011A	N.L.
BANDS					
N.I.	Brake	1	81-92	43022	N.L.
BUSHINGS					
N.I.	Bushing Kit	1	81-92	43030	N.L.
ONE WAY CLUTCHES					
N.I.	Sprag Assembly, One Way Clutch w/Race	1	81-92	43644	N.L.
MISCELLANEOUS COMPONENTS					
N.I.	Gear, Governor (1 1/4" Long)	1	81-92	43684	N.L.
N.I.	Gear, Governor (1 3/4" Long)	1	81-92	43684A	N.L.
N.I.	Piston, Low/Reverse Clutch	1	81-92	43967	N.L.

TK TOLEDO TRANS-KIT · BRYCO · ProSELECT · RoadMaster

SEAL AFTERMARKET PRODUCTS
your source for engineered solutions

PRODUCT ANNOUNCEMENT

Piston Kit RE5R05A 2002-Up (3 Pistons)

Seal Aftermarket Products now has the complete Piston Kit for the RE5R05A covering 2002-Up.
Availability 12/6/13. Please call your Sales Representative for pricing.

17375582
Piston RE5R05A Input Clutch 2002-Up

17375583
Piston RE5R05A Balance High/Low Clutch 2002-Up



17375584
Piston RE5R05A Balance Direct Clutch 2002-Up

17388
Piston Kit RE5R05A 2002-Up [3 Pistons]



B00006

Rebuild Kits Available

TF173002AP - Overhaul RE5R05A (With Pistons) 2002-Up
TF173006AP - Master W/Steels RE5R05A (With Pistons) 2002-Up (Except V8)
TF173006BP - Master W/Steels RE5R05A (With Pistons) 2002-Up (V8 Engines)

Release Date 11/27/2013

Sales Policy: All shipments are FCA Pembroke Park. Price and Availability subject to change
© 2013 Seal Aftermarket Products LLC. ALL RIGHTS RESERVED. Possession of price list does not constitute offer to sell
Disclaimer - All information has been checked for accuracy, however no liability can be assumed for errors and omissions

Seal Aftermarket Products LLC · 2315 SW 32nd Avenue · Pembroke Park FL 33023 · [P] (800) 582-2760 · [F] 954-364-2401 · www.sealaftermarketproducts.com

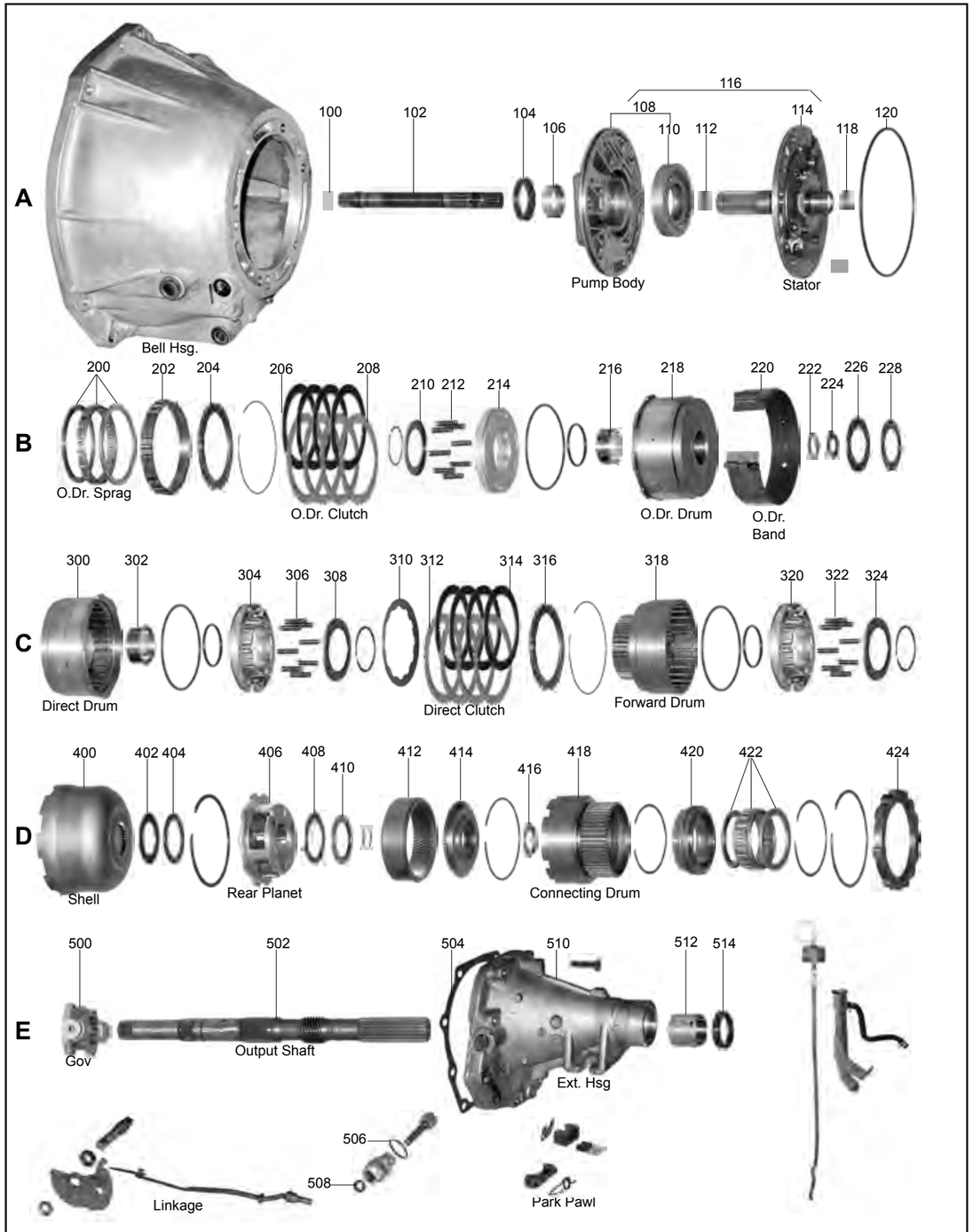
A
B
C
D
E
100
102
104
106
108
110
112
114
116
118
120
Bell Hsg.
Pump Body
Stator
200
202
204
206
208
210
212
214
216
218
220
222
224
226
228
O.Dr. Sprag
O.Dr. Clutch
O.Dr. Drum
O.Dr. Band
300
302
304
306
308
310
312
314
316
318
320
322
324
Direct Drum
Direct Clutch
Forward Drum
400
402
404
406
408
410
412
414
416
418
420
422
424
Shell
Rear Planet
Connecting Drum
500
502
504
506
508
510
512
514
Gov
Output Shaft
Ext. Hsg
Linkage
Park Pawl

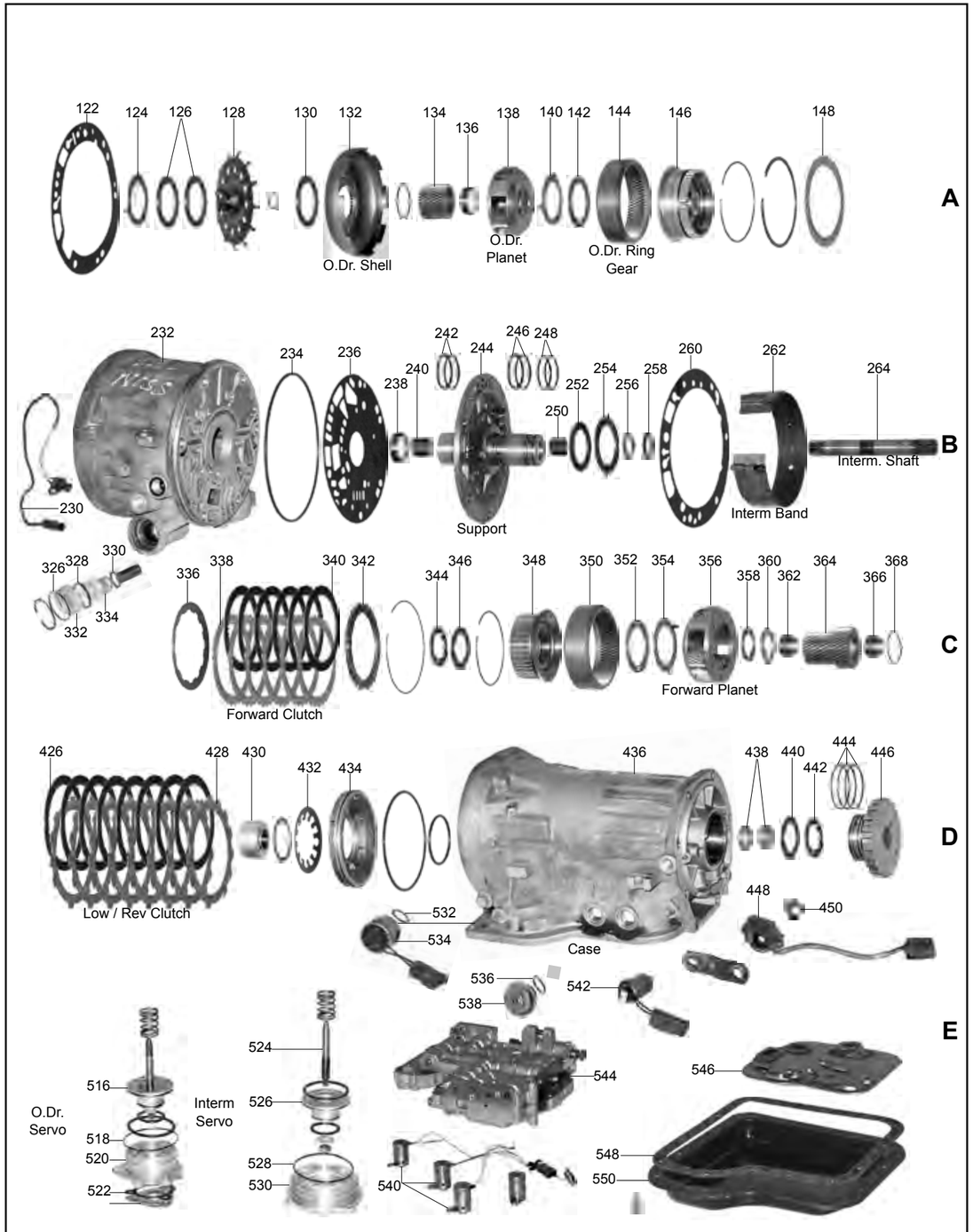
A
B
C
D
E
122
124
126
128
130
132
134
136
138
140
142
144
146
148
O.Dr. Shell
O.Dr. Planet
O.Dr. Ring Gear
230
232
234
236
238
240
242
244
246
248
250
252
254
256
258
260
262
264
Support
Interm Band
Interm. Shaft
326
328
330
332
334
336
338
340
342
344
346
348
350
352
354
356
358
360
362
364
366
368
Forward Clutch
Forward Planet
426
428
430
432
434
436
438
440
442
444
446
448
450
532
534
Low / Rev Clutch
Case
536
538
542
544
546
548
550
O.Dr.
Servo
516
518
520
522
Interm
Servo
524
526
528
530
540

ILL.		Qty.	Year	Part #	Ref. #
MASTER OVERHAUL KITS (WITH STEELS)					
N.I.	L3N71B (Combo Internal/External Servo)	1	71-87	53006	N.L.
N.I.	L4N71B, E4N71B	1	83-97	53006B	N.L.
N.I.	N4A-EL	1	88-92	53006E	N.L.
MASTER OVERHAUL KITS (LESS STEELS)					
N.I.	L3N71B (Combo Internal/External Servo)	1	71-87	53004	N.L.
N.I.	L4N71B, E4N71B	1	83-97	53004B	N.L.
N.I.	N4A-EL	1	88-92	53004E	N.L.
OVERHAUL KITS (WITH RINGS AND SEALS)					
N.I.	L3N71B (Combo Internal/External Servo)	1	71-87	53002	N.L.
N.I.	L4N71B, E4N71B	1	83-97	53002B	N.L.
N.I.	N4A-EL	1	88-92	53002E	N.L.
GASKETS & O-RINGS					
120A	O-Ring, Front Pump & Overdrive Case	1-2	71-93	53311	31363-X0100
122A	Gasket, Front Pump (Non Lock-Up) L3N71B	1	71-87	53310	31366-X0101
122A	Gasket, Front Pump (Lock-Up) L3N71B	1-2	71-87	53310A	31387-X8600
122A	Gasket, Pump To Overdrive Case	1	83-93	53310B	31366-X8600
504E	Gasket, Extension Housing	1	71-93	53305	31335-X0100
548E	Gasket, Bottom Pan (Nissan)	1	71-93	53300	31397-X0102
548E	Gasket, Bottom Pan (Ford)	1	71-93	53300A	D7DZ-7A191A
METAL CLAD SEALS					
104A	Front	1	71-93	53070	31344-X0102
514E	Rear, 1.375" ID L3N71B	1	71-87	53074	31336-X0101
514E	Rear, 1.495" ID L4N71B, E4N71B, N4A-EL	1	83-93	53074B	31336-X8000
514E	Adapter Housing 4wd (Mazda MPV Van)	1	83-93	73074C	M504-13-335
SEALING RINGS & KITS					
N.I.	Ring Kit, L3N71B	1	71-93	53175K	N.L.
N.I.	Ring Kit, L4N71B, E4N71B	1	83-93	53175BK	N.L.
N.I.	Ring Kit, N4A-EL	1	88-93	53175CK	N.L.
FRICTION PLATES					
206B	Overdrive .063" (44T)	2-4	83-93	53100	31532-X0102
314C	Forward & Direct .063" (44T)	6-11	71-93	53100	31532-X0102
426D	Low/ Reverse .078" (51T)	4-8	71-93	53114	31662-X0102
STEEL PLATES					
208B	Overdrive .078" (28T)	2-4	83-93	53120	31536-X0100
208B	Overdrive .063" (28T)	AR	87-93	18126	FT01-19-499
208B	Overdrive .100" (28T)	3	71-93	53120EA	BV01-19-499
312C	Forward & Direct .078" (28T)	6-10	71-93	53120	31536-X0100
312C	Forward & Direct .032" (28T)	AR	71-93	53120A	N.L.
312C	Forward & Direct .063" (28T)	AR	71-93	18126	FT01-19-499
428D	Low/ Reverse .079" (13T)	4-8	71-93	53134	31666-X0100
FILTERS					
546E	L3N71B (Nissan)	1	71-87	53010	31728-X0F00
546E	L3N71B (Ford)	1	71-87	53010A	31728-X0F00
546E	L3N71B (Mazda B2600) 4wd	1	86-89	53010D	N.L.
546E	L4N71B, E4N71B	1	83-97	53010B	31728-X8600
546E	N4A-EL (10 Bolt)	1	88-92	53010E	BV01-19-815
FILTER KITS					
N.I.	L3N71B (Nissan)	1	71-87	53011	N.L.
N.I.	L4N71B, E4N71B	1	83-97	53011B	N.L.
N.I.	N4A-EL (10 Bolt)	1	88-92	53011E	N.L.
BANDS					
220B	Overdrive & Intermediate (Flex Type)	1-2	71-93	53022	31630-X0104

ILL.		Qty.	Year	Part #	Ref. #
BUSHINGS					
N.I.	Bushing Kit, L3N71B	1	71-87	53030	N.L.
N.I.	Bushing Kit, L4N71B, E4N71B, N4A-EL	1	83-93	53030B	N.L.
106A	Pump Body	1	71-93	53034	31343-X0100
512E	Extension Housing (1.495" ID) L4N71B, E4N71B, N4A-EL	1	83-93	73066	31332-X8000R
THRUST WASHERS/BEARINGS					
WASHERS					
N.I.	Washer Kit, Selective Washers Only	1	71-93	53200A	N.L.
226B	Overdrive Drum	1	83-93	53211B	31528-X0100
252B	Direct Drum 1.70mm (.067")	1	71-93	53211A	31528-X0105
252B	Direct Drum 1.90mm (.075")	1	71-93	53211B	31528-X0100
252B	Direct Drum 2.10mm (.083")	1	71-93	53211C	31528-X0101
252B	Direct Drum 2.30mm (.091")	1	71-93	53211D	31528-X0102
252B	Direct Drum 2.50mm (.098")	1	71-93	53211E	31528-X0103
ELECTRICAL COMPONENTS					
540E	Solenoid Assembly, N4A-EL (w/ 4 Solenoids)	1	88-93	53420	BV01-21-280A
542E	Solenoid, Downshift 4N71B	1	83-93	53434	31941-X0106
VALVE BODY RECALIBRATION KITS					
N.I.	Shift Kit®, N4A-EL (Transgo®)	1	88-93	T53165	SK® N4AEL
DRUMS & COMPONENTS					
300C	Drum, Direct (4 Clutch) (4.572" OD Piston)	1	71-93	53555A	N.L.
300C	Drum, Direct (4 Clutch) (4.283" OD Piston)	1	71-93	53555B	N.L.
432D	Diaphragm Spring, Low/ Reverse Clutch Return	1	71-93	53977	31651-X0101
ONE WAY CLUTCHES					
200B	Sprag, Overdrive (In Overdrive Drum)	1	83-93	53650	31605-X8500
422D	Sprag, Rear	1	71-93	53654	31473-20301
SHELLS & SUPPORTS					
244B	Center Support (w/ 2 Small Bushings) (Washer Type)	1	83-93	53630A	N.L.
244B	Center Support (w/ 1 Large & 1 Small Bushing) (Washer Type)	1	83-93	53630B	N.L.
MISCELLANEOUS COMPONENTS					
538E	Modulator, Screw-In .840" Diaphragm	1	71-93	13160	BT07-19-823
538E	Modulator, Screw-In .910" Diaphragm	1	71-93	13160A	31931-X0110
538E	Modulator, L4N71B (Mazda MPV Van)	1	83-93	13160D	N.L.
538E	Modulator, Push In (N4A-EL)	1	88-93	53160A	BV01-19-823A
TECHNICAL MANUALS					
N.I.	Tech Manual, L4N71B, E4N71B (CD Rom Only)	1	83-93	53400B	N.L.
N.I.	Tech Manual, N4A-EL	1	88-93	53400C	N.L.

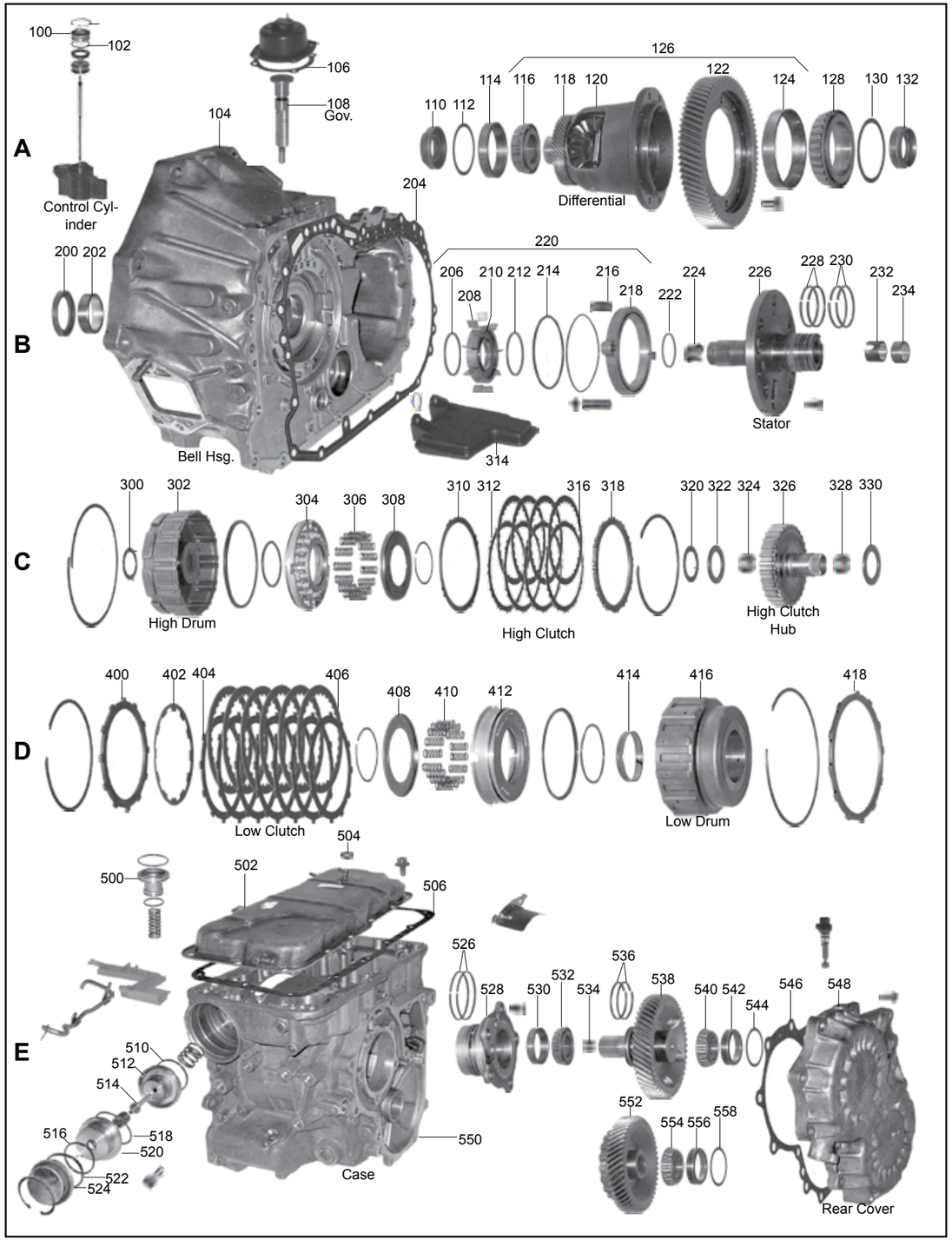
100
102
106
108
Gov.
104
Control Cylinder
126
114
116
118
120
122
124
128
130
132
110
112
Differential
204
220
200
202
206
210
212
214
216
218
222
224
226
228
230
232
234
208
Stator
Bell Hsg.
314
300
302
304
306
308
310
312
316
318
320
322
324
326
328
330
High Drum
High Clutch
High Clutch Hub
400
402
404
406
408
410
412
414
416
418
Low Clutch
Low Drum
504
500
502
506
526
528
530
532
534
536
538
540
542
544
546
548
510
512
514
516
518
520
522
524
550
552
554
556
558
Case
Rear Cover
A
B
C
D
E

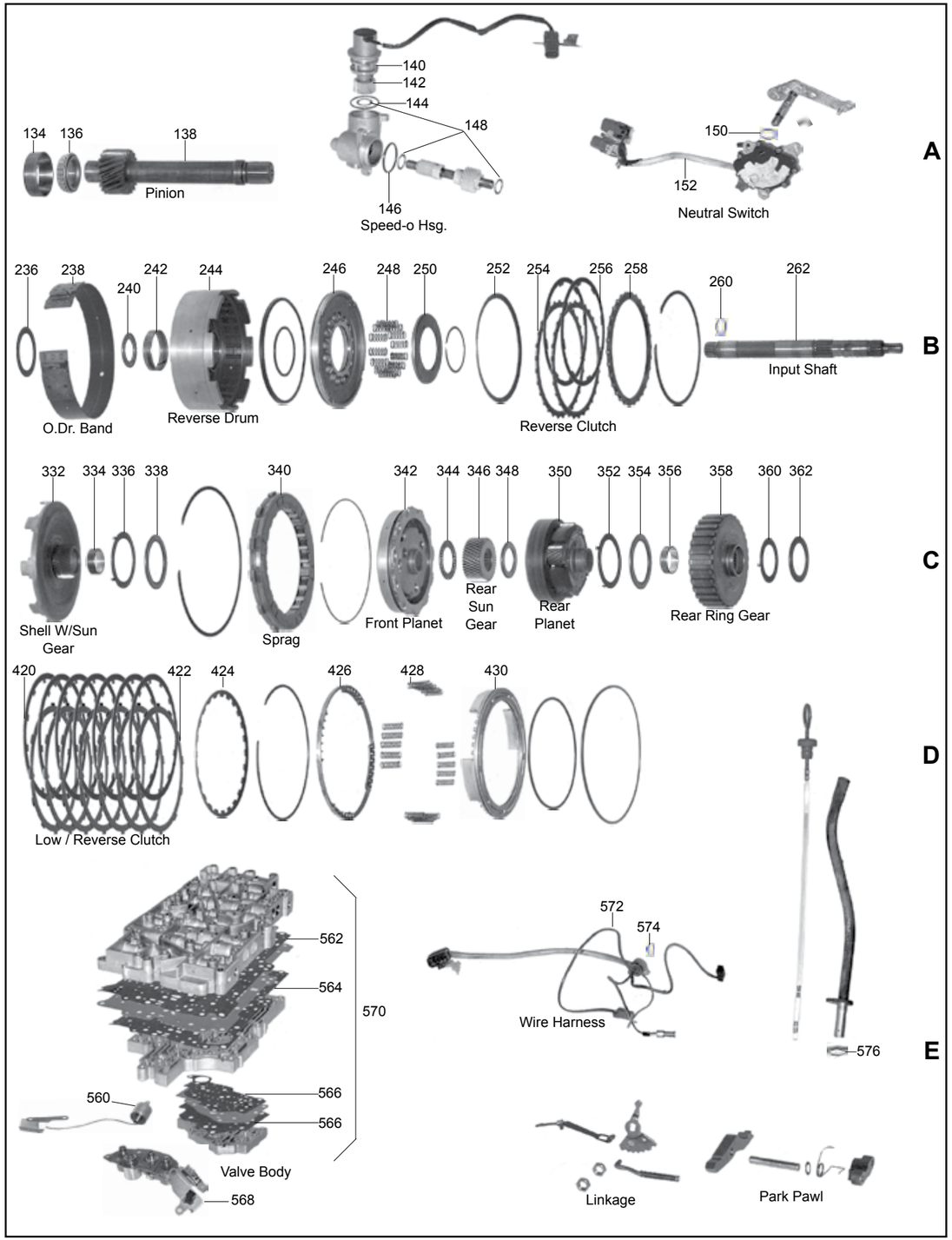
134
136
138
Pinion
140
142
144
148
146
Speed-o Hsg.
150
152
Neutral Switch
236
238
240
242
244
246
248
250
252
254
256
258
260
262
O.Dr. Band
Reverse Drum
Reverse Clutch
Input Shaft
332
334
336
338
340
342
344
346
348
350
352
354
356
358
360
362
Shell W/Sun Gear
Sprag
Front Planet
Rear Sun Gear
Rear Planet
Rear Ring Gear
420
422
424
426
428
430
Low / Reverse Clutch
562
564
570
572
574
Wire Harness
560
566
566
Valve Body
568
576
Linkage
Park Pawl
A
B
C
D
E

ILL.		Qty.	Year	Part #	Ref. #
MASTER OVERHAUL KITS (WITH STEELS)					
N.I.	RL4F02A (Hydraulic) Maxima (8/85-88)	1	85-88	93006	N.L.
N.I.	RL4F02A (Hydraulic) Stanza	1	86-89	93006A	N.L.
N.I.	RL4F02A (Hydraulic) Pulsar	1	88-90	93006B	N.L.
N.I.	RL4F02A (Hydraulic) Axxess, Pintara	1	90-93	93006D	N.L.
N.I.	RE4F02A (Electronic) Maxima	1	89-94	93006C	N.L.
N.I.	RE4F02A (Electronic) Stanza	1	89-94	93006E	N.L.
MASTER OVERHAUL KITS (LESS STEELS)					
N.I.	RL4F02A (Hydraulic) Maxima (8/85-88)	1	85-88	93004	N.L.
N.I.	RL4F02A (Hydraulic) Stanza	1	86-89	93004A	N.L.
N.I.	RL4F02A (Hydraulic) Pulsar	1	88-90	93004B	N.L.
N.I.	RL4F02A (Hydraulic) Axxess, Pintara	1	90-93	93004D	N.L.
N.I.	RE4F02A (Electronic) Maxima	1	89-94	93004C	N.L.
N.I.	RE4F02A (Electronic) Stanza	1	89-94	93004E	N.L.
OVERHAUL KITS (WITH RINGS AND SEALS)					
N.I.	RL4F02A (Hydraulic)	1	85-89	93002	N.L.
N.I.	RL4F02A (Hydraulic) Axxess, Pintara	1	90-93	93002H	N.L.
N.I.	RE4F02A (Electronic)	1	89-94	93002C	N.L.
GASKETS & O-RINGS					
204B	Gasket, Bell Housing to Case	1	84-94	93318	31309-21X04
506E	Gasket, Top Pan Gasket	1	84-94	93302	31396-21X01
522E	O-Ring, Servo Cover	1	84-94	93362	N.L.
546E	Gasket, Transfer Gear Cover	1	84-94	93304	31397-21X00
562E	Gasket, Valve Body to Spacer Plate	1	84-94	93321C	31717-27X60
564E	Gasket, Valve Body to Case	1	84-94	93320C	31716-27X60
564E	Gasket Set, Valve Body (Axxess, Pintara)	1	84-94	93320K	N.L.
566E	Gasket, Valve Body (Lock-Up) (Upper)	1	84-94	93322CA	31827-27X60
566E	Gasket, Valve Body (Lock-Up) (Lower)	1	84-94	93322CB	31828-27X60
METAL CLAD SEALS					
110A	Right Axle (33 x 59 x 17mm) (All 2wd)	1	84-94	93076	38342-03E01
132A	Left Axle (39 x 57 x 17mm) (All Maximas)	1	84-94	93077	38342-21X01
132A	Left Axle (39 x 57 x 17mm) (Stanza RL 2wd - Some)	1	84-94	93077	38342-21X01
132A	Left Axle (39 x 57 x 21mm) (Stanza RL 2wd - RE 2wd, RL 4wd)	1	84-94	93077A	38342-21X00
132A	Left Axle (39 x 57 x 21mm) (Axxess RL 2wd, Pulsar RL)	1	84-94	93077A	38342-21X00
132A	Left Axle (46 x 90 x 11mm)	1	84-94	93077B	38342-80X00
200B	Front (Converter Housing)	1	84-94	93070	31344-21X00
SEALING RINGS & KITS					
N.I.	Ring Kit	1	84-94	93175K	N.L.
FRICTION PLATES					
256B	Reverse (8T)	2	85-89	93110	31532-21X00
256B	Reverse (34T)	2	90-94	93110A	31532-AA030
316C	High (.062") (30 Wide T) 5.235" OD	4	84-94	93106B	31532-AA050
316C	High (.062") (30 Wide T) 5.045" OD	4	84-94	93106A	31532-21X10
316C	High (.079") (30 Wide T) 5.045" OD	3	84-94	93106	31532-21X03
406D	Low (30T)	4-6	84-94	93108	31592-21X00
420D	Low/ Reverse (12T)	5-7	84-94	93114	31662-21X01
N.I.	Friction Module, RE4F02A (Maxima 89-94)	1	84-94	93119C	N.L.
STEEL PLATES					
254B	Reverse (30 Round Teeth)	2	84-94	93130	31536-21X01
254B	Reverse (30 Square Teeth)	2	84-94	93130A	31536-AA000
312C	High (24T) (.055")	7	84-94	93126	31536-21X03
312C	High (24T) (.067")	7	84-94	93126A	31536-21X02
312C	High (24T) (.079")	1-5	84-94	93126AA	31566-21X00
312C	High (24T) (.108")	3-6	84-94	93126AB	31526-21X02
312C	High (27T) (.079")	1	84-94	93126BA	31536-41X03
312C	High (27T) (.095")	4	84-94	93126C	31536-21X04
404D	Low	5-7	84-94	93128	31596-21X00
422D	Low/ Reverse	5-7	84-94	93134	31666-23X00
FILTERS					
314C	RL4F02A, RE4F02A	1	84-94	93010	31728-21X02

ILL.		Qty.	Year	Part #	Ref. #
BANDS					
238B	Overdrive	1	84-94	93020	31630-21X00
BUSHINGS					
N.I.	Bushing Kit, RL4F02A, RE4F02A	1	84-94	93030	N.L.
202B	Bell Housing	1	84-94	93034	31343-21X01
THRUST WASHERS/BEARINGS					
WASHERS					
N.I.	Washer Kit	1	84-94	93200C	N.L.
236B	Stator to Reverse Drum .035" (Plastic)	1	84-94	93211A	31528-21X01
236B	Stator to Reverse Drum .051" (Plastic)	1	84-94	93211C	31528-21X03
236B	Stator to Reverse Drum .075" (Plastic)	1	84-94	93211	31528-21X06
ELECTRICAL COMPONENTS					
560E	Solenoid, Lock-Up (RL4F02A)	1	84-94	93425A	31940-21X04
560E	Solenoid, Lock-Up (RE4F02A)	1	89-94	93425B	31940-27X63
568E	Solenoid Assembly (4 Solenoids w/ Mounting Plate) (RE4F02A)	1	89-94	93420	31940-27X66
N.I.	Solenoid, Overdrive (RL4F02A)	1	84-94	93427A	31940-21X05
VALVE BODY RECALIBRATION KITS					
N.I.	Shift Kit®, RE4F02A & RL4F02A (Transgo®)	1	84-94	T93165	SK® RE4F02A
PUMPS					
226B	Stator (3.00" Shaft) (Stepped)	1	84-94	93520B	N.L.
226B	Stator (3.25" Shaft) (Stepped)	1	84-94	93520CA	N.L.
226B	Stator (3.25" Shaft) (Non Stepped)	1	84-94	93520CC	N.L.
PUMP COMPONENTS					
220B	Rotor Kit, Pump (w/ Vanes, Slide & Rotor)	1	84-94	93531	N.L.
DRUMS & COMPONENTS					
244B	Reverse (Cast Iron, Most Maximas)	1	84-94	93556	N.L.
244B	Reverse (Steel, Most Stanza's)	1	84-94	93556A	N.L.
302C	High (24T Steels)	1	84-94	93555A	31541-21X02
302C	High (27T Steels)	1	84-94	93555	31541-21X01
326C	Clutch Hub, High Clutch (Cast Iron Clutch Hub)	1	84-94	93575A	31550-21X06
PLANETS & COMPONENTS					
342C	Front	1	84-94	93582C	N.L.
SUN GEARS					
346C	Sun Gear, Rear (No Groove)	1	84-94	93614	31469-21X01
ONE WAY CLUTCHES					
340C	Sprag Assembly, One Way Clutch w/ Race	1	84-94	93642	N.L.
SHELLS & SUPPORTS					
332C	Shell, w/ Sun Gear (No Grooves)	1	84-94	93622	31460-21X03
332C	Shell, w/ Sun Gear (1 Groove)	1	84-94	93622A	N.L.
VALVE BODIES & GOVERNORS					
570E	Valve Body Hydraulic	1	84-94	93740-3	N.L.
570E	Valve Body Electronic	1	88-94	93740-1	N.L.
N.I.	Sleeve, Boost Valve (Pressure Regulator)	1	84-94	93741P	N.L.
CASES/HOUSINGS & COMPONENTS					
104A	Bell Housing, Square Starter Hole (RE4F02A) (VG Code)	1	84-94	93750BB	N.L.
MISCELLANEOUS COMPONENTS					
252B	Reverse Cushion Kit (Cast Drum Saver Kit)	1	84-94	93854K	68758
252B	Reverse Cushion Kit (Steel Drum Saver Kit)	1	84-94	73854K	N.L.
252B	Reverse Cushion Plate w/ Tangs	1	84-94	93854A	31535-21X05
TECHNICAL MANUALS					
N.I.	RL4F02A (Hydraulic)	1	84-94	93400A	N.L.
N.I.	RE4F02A (Electronic)	1	84-94	93400B	N.L.

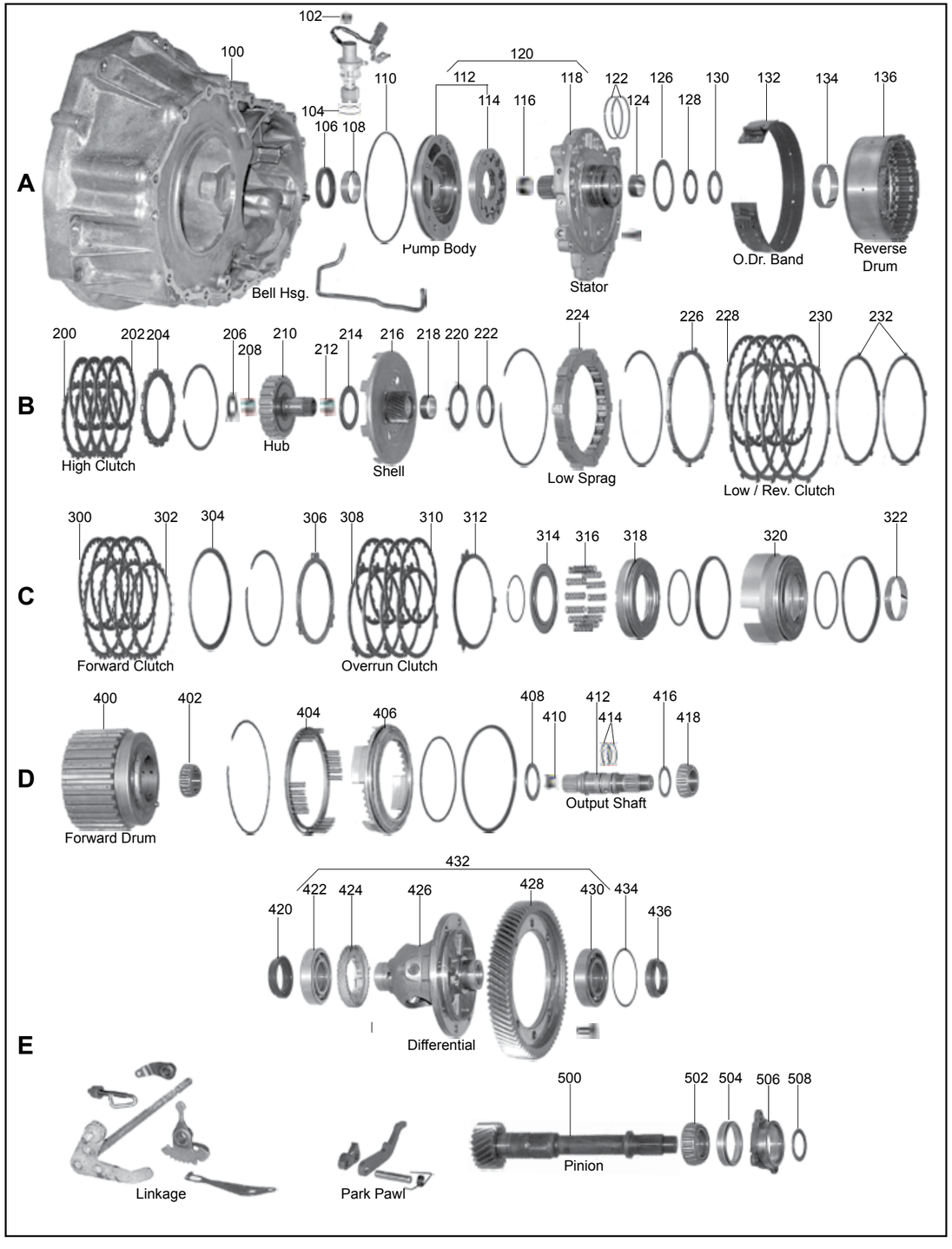
A
B
C
D
E
Bell Hsg.
Pump Body
Stator
O.Dr. Band
Reverse Drum
High Clutch
Hub
Shell
Low Sprag
Low / Rev. Clutch
Forward Clutch
Overrun Clutch
Forward Drum
Output Shaft
Differential
Linkage
Park Pawl
Pinion

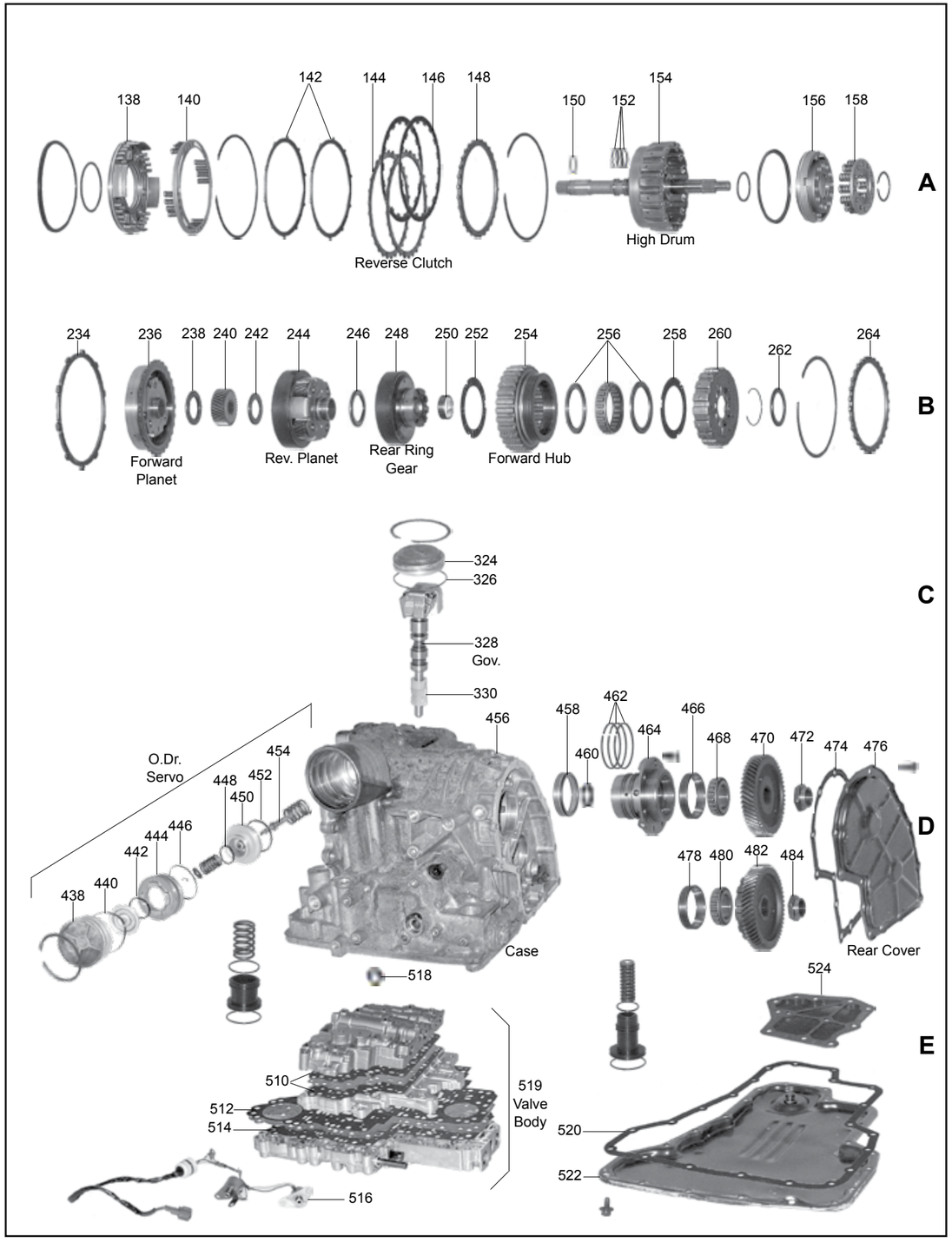
A
B
C
D
E
Reverse Clutch
High Drum
Forward Planet
Rev. Planet
Rear Ring Gear
Forward Hub
O.Dr. Servo
Case
Rear Cover
519 Valve Body

ILL.		Qty.	Year	Part #	Ref. #
MASTER OVERHAUL KITS (WITH STEELS)					
N.I.	RL4F03A, RE4F03A, RE4F03B, RE4F03V (1.6L)	1	91-97	83006A	N.L.
N.I.	RL4F03A, RE4F03A, RE4F03B, RE4F03V (1.6L)	1	98-Up	83006D	N.L.
N.I.	RL4F03A, RE4F03A, RE4F03B, RE4F03V (Exc 1.6L)	1	91-97	83006C	N.L.
N.I.	RL4F03A, RE4F03A, RE4F03B, RE4F03V (Exc 1.6L)	1	98-Up	83006E	N.L.
MASTER OVERHAUL KITS (LESS STEELS)					
N.I.	RL4F03A, RE4F03A, RE4F03B, RE4F03V	1	91-97	83004A	N.L.
N.I.	RL4F03A, RE4F03A, RE4F03B, RE4F03V	1	98-Up	83004D	N.L.
OVERHAUL KITS (WITH RINGS AND SEALS)					
N.I.	RL4F03A, RE4F03A, RE4F03B, RE4F03V	1	91-Up	83002A	N.L.
N.I.	RE4F03A (Micra)	1	04-Up	83002H	N.L.
BONDED PISTONS					
156A	High Piston (Bonded)	1	07-Up	83965A	N.L.
N.I.	High Retainer (Bonded)	1	07-Up	83985A	N.L.
GASKETS & O-RINGS					
110A	O-Ring, Pump to Case	1	91-Up	83311A	31526-31X02
474D	Gasket, Side Cover	1	91-Up	83304A	31398-31X02
520E	Gasket, Bottom Pan	1	91-Up	83300A	31397-21X26
520E	Gasket, Bottom Pan	1	07-Up	83300E	N.L.
METAL CLAD SEALS					
106A	Converter Housing	1	91-Up	83070A	BH3937-F0
420D	Left Axle (w/o Viscous Coupling)	1	91-Up	83076AA	AE2365-G0
420D	Left Axle (w/ Viscous Coupling)	1	91-Up	83077AA	38342-31X02
436D	Right Axle (1.6L)	1	91-Up	83076AA	AE2365-G0
436D	Right Axle (Exc 1.6L)	1	91-Up	83076A	38342-31X01
518E	Manual Lever	1	91-Up	60072	91209-612-003
SEALING RINGS & KITS					
N.I.	Ring Kit	1	91-Up	83175AK	N.L.
FRICTION PLATES					
146A	Reverse	2	91-Up	83110A	31532-31X00
202B	High .063" (.265" Wide T) (Exc. 1.6L)	4	91-Up	83106AB	31532-31X08
202B	High .079" (.170" Wide T) (1.6L)	3	91-Up	83106AA	31532-31X01
228B	Low/ Reverse (5.89" OD)	5	91-97	83114A	31532-31X04
228B	Low/ Reverse (5.94" OD)	5	98-Up	83114AA	31532-31X10
300C	Forward	5	91-Up	83108A	31532-31X02
310C	Overrun	3	91-Up	83116A	31532-31X03
STEEL PLATES					
144A	Reverse	2	91-Up	83130A	31536-31X05
200B	High (.059")	6	91-Up	83126AA	31536-31X07
200B	High (.079")	1-5	91-Up	83126A	31536-31X01
230B	Low/ Reverse	5	91-Up	83134A	31666-31X01
302C	Forward	5	91-Up	83128A	31536-31X02
308C	Overrun	4	91-Up	83136A	31536-31X03
FILTERS					
524E	RL4F03A, RE4F03A, RE4F03B, RE4F03V	1	91-Up	83010AA	31728-31X01
FILTER KITS					
N.I.	RL4F03A, RE4F03A, RE4F03B, RE4F03V	1	91-Up	83011AA	N.L.
N.I.	RL4F03A, RE4F03A, RE4F03B, RE4F03V	1	07-Up	83011E	N.L.
BANDS					
132A	Overdrive (RL4F03A, RE4F03A) (w/o Tab)	1	91-Up	83020A	31630-31X01
132A	Overdrive (RL4F03A, RE4F03A) (w/ Tab)	1	00-Up	83020AA	31630-31X03
BUSHINGS					
N.I.	Bushing Kit	1	91-Up	83030A	N.L.
108A	Pump Housing	1	91-Up	83034A	31405-31X13

ILL.		Qty.	Year	Part #	Ref. #
THRUST WASHERS/BEARINGS					
WASHERS					
126A	Washer Kit, Stator Selectives Only (6 Pieces)	1	91-Up	83211K	N.L.
ELECTRICAL COMPONENTS					
516E	Solenoid Assembly (1.6L) (2 Solenoids)	1	91-94	83420AC	31940-31X01
516E	Solenoid Assembly (1.6L) (2 Solenoids)	1	95-Up	83420AG	31940-31X03
516E	Solenoid Assembly (2.0L) (2 Solenoids)	1	91-92	83420AC	31940-31X01
516E	Solenoid Assembly (2.0L) (5 Solenoids) (Long Wire)	1	93-98	83420AE	31940-33X00
516E	Solenoid Assembly (2.0L & 1.8L) (5 Solenoids) (Short Wire)	1	99-Up	83420AF	N.L.
VALVE BODY RECALIBRATION KITS					
N.I.	Shift Kit®, RL4F03A (Transgo®)	1	91-Up	T83165A	SK® RL4F03A
N.I.	Shift Kit®, RE4F03A (Transgo®)	1	93-Up	T83165D	SK® RE4F03A
N.I.	Shift Kit®, RE4F03B (Transgo®)	1	00-Up	T83165E	SK® RE4F03B
N.I.	Reprogramming Kit™, RL4F03A (Transgo®)	1	91-Up	T83169A	RL4F03A-HD2
N.I.	Reprogramming Kit™, RE4F03A (Transgo®)	1	93-Up	T83169D	RE4F03A-HD2
N.I.	Reprogramming Kit™, RE4F03B (Transgo®)	1	00-Up	T83169E	RE4F03B-HD2
PUMPS					
120A	Pump Complete (11T Inner Gear)	1	91-Up	83500A	N.L.
DRUMS & COMPONENTS					
154A	Drum, High w/ 5 3/16" Input Shaft	1	91-Up	83555AB	N.L.
156A	High Piston (Bonded)	1	07-Up	83965A	N.L.
400D	Drum, Forward & Overrun	1	91-Up	83554A	N.L.
N.I.	High Retainer (Bonded)	1	07-Up	83985A	N.L.
ONE WAY CLUTCHES					
224B	Sprag, Low Clutch (15 Rollers)	1	91-Up	83642A	31473-31X00
224B	Sprag, Low Clutch (19 Elements)	1	91-Up	83642AB	31473-31X02
256B	Sprag, Forward (24 Lug, .387" Wide Lugs)	1	91-Up	83658AA	31484-31X00
256B	Sprag, Forward (24 Lug, .465" Wide Lugs)	1	91-Up	83658AB	31484-31X01
VALVE BODIES & GOVERNORS					
328C	Governor, Assembly (16T)	1	91-Up	83680A	N.L.
330C	Governor Gear (16T)	1	91-Up	83684A	N.L.
519E	Valve Body (2 Solenoid) RL4F03A	1	91-Up	83740-5	38440-M3000
519E	Valve Body (5 Solenoid) RE4F03A	1	91-Up	83740-6	N.L.
MISCELLANEOUS COMPONENTS					
324C	Cover, Governor (Tin)	1	91-Up	83686A	N.L.
TECHNICAL MANUALS					
N.I.	Technical Manual	1	91-Up	83400A	N.L.

RE4F04A, RE4F04B, (4F20E), JF403E, LJ4A-EL

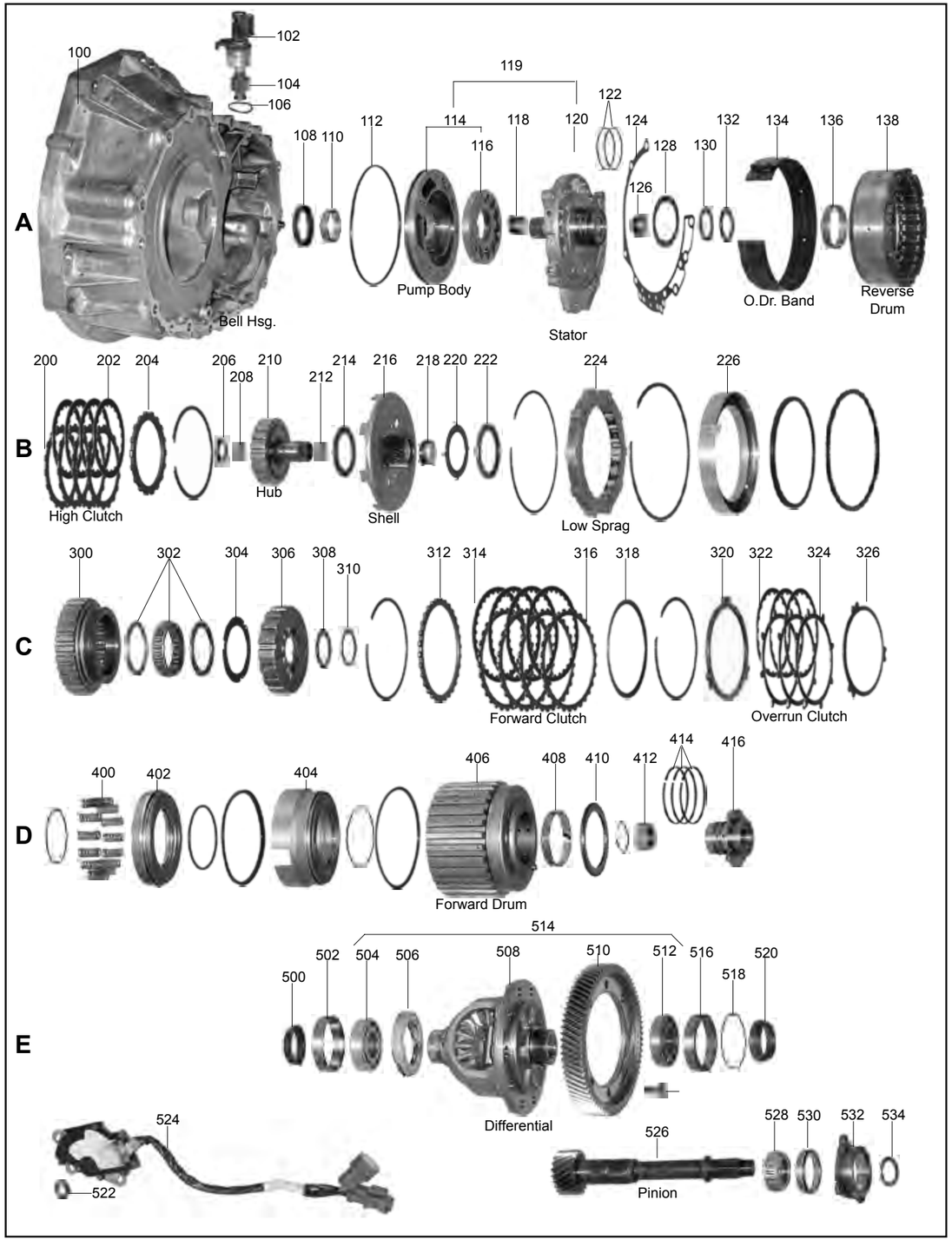

RE4F04A, RE4F04B, (4F20E), JF403E, LJ4A-EL

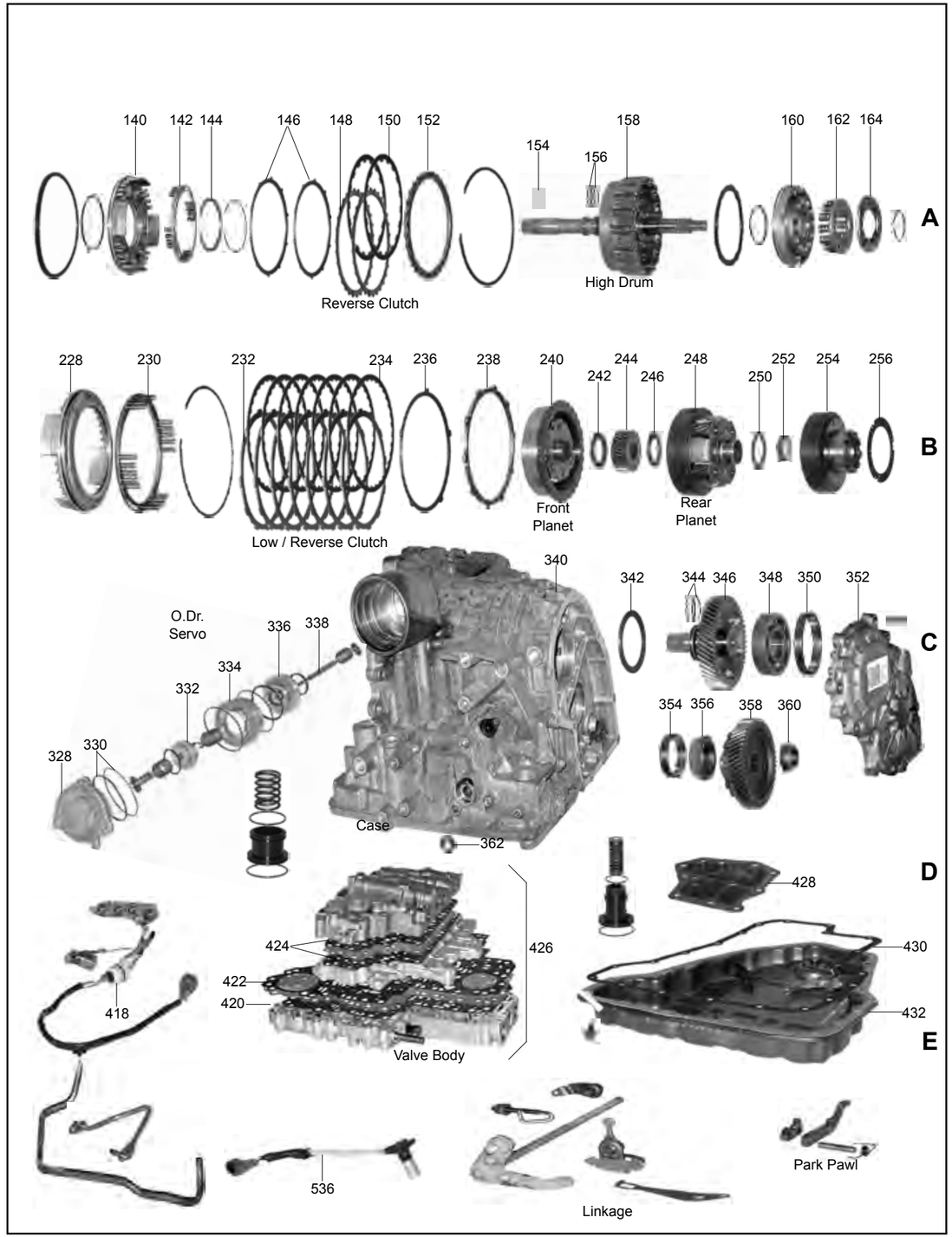

RE4F04A, RE4F04B, (4F20E), JF403E, LJ4A-EL

FWD
4 SPEED

ILL.		Qty.	Year	Part #	Ref. #
MASTER OVERHAUL KITS (WITH STEELS)					
N.I.	JF403E (GEO, Isuzu)	1	90-93	83006AA	N.L.
N.I.	LJ4A-EL (Mazda Millenia)	1	95-02	83006AB	N.L.
N.I.	RE4F04A, RE4F04B, 4F20E (Nissan, Ford, Infiniti) (Exc Below)	1	92-06	83006B	N.L.
N.I.	RE4F04B (Maxima 01/03-Up, Quest 05/03-Up, Altima 01/04-Up)	1	03-06	83006K	N.L.
MASTER OVERHAUL KITS (LESS STEELS)					
N.I.	JF403E (GEO, Isuzu)	1	90-93	83004AA	N.L.
N.I.	LJ4A-EL (Mazda Millenia)	1	95-02	83004AB	N.L.
N.I.	RE4F04A, RE4F04B, 4F20E (Nissan, Ford, Infiniti) (Exc Below)	1	92-06	83004B	N.L.
N.I.	RE4F04B (Maxima 01/03-06, Quest 05/03-06, Altima 01/04-06)	1	03-06	83004K	N.L.
OVERHAUL KITS (WITH RINGS AND SEALS)					
N.I.	JF403E, LJ4A-EL (Mazda, GEO, Isuzu)	1	90-02	83002AA	N.L.
N.I.	RE4F04A, RE4F04B, 4F20E (Nissan, Ford, Infiniti)	1	92-06	83002BF	N.L.
BONDED PISTONS					
160A	Piston, High Clutch (Bonded) (RE4F04B)	1	03-06	83965BA	N.L.
N.I.	Piston, High Clutch Balance (Bonded) (RE4F04B)	1	03-06	83965BB	N.L.
GASKETS & O-RINGS					
112A	O-Ring, Pump to Case	1	90-06	83311B	94385709
430D	Gasket, Bottom Pan (21 Bolts) (JF403E)	1	90-93	83300C	94385731
430D	Gasket, Bottom Pan (21 Bolts) (RE4F04A, RE4F04B, 4F20E)	1	92-06	83300B	31397-80X01
430D	Gasket, Bottom Pan (22 Bolts) (LJ4A-EL)	1	95-02	83300D	N.L.
METAL CLAD SEALS					
108A	Front (JF403E, LJ4A-EL)	1	90-02	98070	97031954
108A	Front (RE4F04A, RE4F04B, 4F20E)	1	92-06	83070B	31375-80X00
500E	Left Axle (RE4F04A, RE4F04B, 4F20E) (w/o Viscous Coupling)	1	92-06	83077B	38342-03E00
500E	Left Axle (RE4F04V) (w/ Viscous Coupling)	1	92-06	93077B	38342-80X00
520E	Axle (Both Sides) (JF403E)	2	90-93	83076C	9707-01-82
520E	Axle (Both Sides) (LJ4A-EL)	2	95-02	42076A	E6GZ-11-77D
520E	Right Axle (RE4F04A, RE4F04B, 4F20E)	1	92-06	93076	38342-03E01
SEALING RINGS & KITS					
N.I.	Ring Kit (RE4F04A, RE4F04B, 4F20E)	1	92-06	83175BK	N.L.
N.I.	Ring Kit (JF403E, LJ4A-EL)	1	90-02	83175CK	N.L.
FRICTION PLATES					
150A	Reverse (5.500"OD) (Exc Below)	2	90-06	83110B	94385871
150A	Reverse (5.799"OD) (Maxima 1/03-06, Quest 5/03-06, Altima 1/04-06)	2	03-06	83110BA	31532-89X00
202B	High (20T) (JF403E)	4	90-93	83106BB	94385851
202B	High (21T) (Exc. JF403E) (92-5/94)	4	92-E94	83106B	31532-80X05
202B	High (24T) (.063") (6/94-Up) (Exc Below)	4	L94-06	83106BA	31532-80X10
202B	High (24T) (.059") (Maxima 1/03-06, Quest 5/03-06, Altima 1/04-06)	4-5	03-06	83106BC	DAN03961
234B	Low/ Reverse .063" (32T) (JF403E, LJ4A-EL)	7	90-02	83114B	97069350
234B	Low/ Reverse .071" (32T) (RE4F04A, RE4F04B, 4F20E)	6-7	92-06	83114BA	31662-80X02
314C	Forward .055" (32T) (LJ4A-EL)	6	95-02	83108BB	FX01-19-590A
314C	Forward .063" (32T) (Exc LJ4A-EL)	5-6	90-02	83108B	94385824
322C	Overrun .063" (20T)	3-4	90-06	83116B	94385834
STEEL PLATES					
148A	Reverse (5.756" OD) (30T) (Exc Below)	2-3	90-06	83130B	94385872
148A	Reverse (5.984" OD) (32T) (Maxima 1/03-06, Quest 5/03-06, Altima 1/04-06)	2	03-06	83130BA	N.L.
200B	High (.055", 3.615" ID) (Exc. JF403E)	6-8	92-06	83126BA	31536-80X05
200B	High (.079", 3.615" ID) (Exc. JF403E)	1	92-06	83126BB	31536-80X04
200B	High (.079", 4.686" ID) (JF403E)	6	90-93	83126BD	97043655
200B	High (.087", 4.686" ID) (JF403E)	6	90-93	83126BC	94385852
232B	Low/ Reverse (10 Narrow T) (Exc. JF403E)	6-8	90-06	83134B	31666-80X00
232B	Low/ Reverse (10 Wide T) (JF403E)	6	90-93	83134C	94385691
316C	Forward (.071") (Exc. LJ4A-EL)	6	92-06	83128B	94385825
316C	Forward (.055") (L4JA-EL)	6	95-02	83128BB	FX01-19-561
324C	Overrun	3-5	90-06	83136B	94387815
PRESSURE PLATES					
204B	High (.134", 3.615" ID) Top	1	90-06	83146BC	N.L.

RE4F04A, RE4F04B, (4F20E), JF403E, LJ4A-EL

ILL.		Qty.	Year	Part #	Ref. #
FILTERS					
428D	JF403E (GEO, Isuzu)	1	90-93	83010AE	94385937
428D	LJ4A-EL (Mazda)	1	95-02	83010AG	FX01-19-815
428D	RE4F04A, RE4F04B, 4F20E (0.400" Pickup Tube) (Nissan, Ford, Infiniti)	1	92-06	83010BB	31728-80X03
428D	RE4F04A, RE4F04B, 4F20E (1.300" Pickup Tube) (Nissan)	1	02-06	83010BC	FX01-19-815
FILTER KITS					
N.I.	LJ4A-EL (Mazda)	1	95-02	83011AG	N.L.
N.I.	RE4F04A, RE4F04B, 4F20E (0.400" Pickup Tube) (Nissan, Ford, Infiniti)	1	92-06	83011BB	N.L.
N.I.	RE4F04A, RE4F04B, 4F20E (1.300" Pickup Tube) (Nissan)	1	02-06	83011BC	N.L.
BANDS					
134A	Overdrive (1 9/16" Wide) (JF403E, LJ4A-EL)	1	90-02	83020C	94385793
134A	Overdrive (1.625" Wide) (RE4F04A, RE4F04B, 4F20E)	1	92-06	83020B	31630-80X02
BUSHINGS					
N.I.	Bushing Kit (RE4F04A)	1	90-06	83030B	N.L.
110A	Pump Housing	1	90-06	83034B	31405-80X08
ELECTRICAL COMPONENTS					
418D	Solenoid Assembly (JF403E)	1	90-02	83420A	94385935
418D	Solenoid Assembly (LJ4A-EL)	1	95-02	83420C	FX01-21-1D1A
418D	Solenoid Assembly (RE4F04A, 4F20E) (Long Wire Design)	1	92-06	83420B	31940-80X25
418D	Solenoid Assembly (RE4F04B) (Short Wire Design)	1	00-06	83420BA	31940-85X01
VALVE BODY RECALIBRATION KITS					
N.I.	Shift Kit® (RE4F04A, RE4F04B, 4F20E) (Transgo®)	1	92-06	T83165B	SK® RE4F04A
N.I.	Shift Kit® (RE4F04B) (Transgo®)	1	00-06	T83165C	SK® RE4F04B
N.I.	Shift Kit® (LJ4A-EL) (Transgo®)	1	95-02	T83165F	SK® LJ4AEL
N.I.	Reprogramming Kit™ (RE4F04A, RE4F04B, 4F20E) (Transgo®)	1	92-06	T83169B	RE4F04A-HD2
N.I.	Reprogramming Kit™ (RE4F04B) (Transgo®)	1	00-06	T83169C	RE4F04B-HD2
N.I.	Reprogramming Kit™ (JF403E, LJ4A-EL) (Transgo®)	1	95-02	T83169F	LJ4AEL-HD2
VALVE BODY COMPONENTS					
N.I.	Valve, Pressure Regulator (Oversized) (req T-63940-TL Reamer)	1	92-06	83741PK	N.L.
N.I.	Valve Kit, 1-2 Accumulator (req T-63940-BST Sizing Tool)	1	92-06	83741EK	N.L.
N.I.	Valve, Accumulator Shift	1	92-06	83741EAK	N.L.
PUMPS					
119A	Pump Complete (9T Inner Gear) (Cast Iron Stator) (JF403E)	1	90-02	83500AE	N.L.
119A	Pump Complete (11T Inner Gear) (Aluminum Stator) (RE4F04A)	1	92-06	83500BA	N.L.
DRUMS & COMPONENTS					
138A	Reverse (30 Drive Lugs) (JF403E, LJ4A-EL)	1	90-02	83556AE	N.L.
138A	Reverse (16 Drive Lugs) (RE4F04A, RE4F04B, 4F20E) (Exc 3.5L)	1	92-06	83556BA	N.L.
158A	High w/ Input Shaft (28T Steels) (JF403E, LJ4A-EL)	1	90-02	83555AE	N.L.
158A	High w/ Input Shaft (8T Steels) (RE4F04A, RE4F04B, 4F20E)	1	92-06	83555BA	N.L.
160A	Piston, High Clutch (Bonded) (RE4F04B)	1	03-06	83965BA	N.L.
210B	Hub, High Clutch (21T 3.500" OD) (4F20E)	1	92-06	83575D	N.L.
210B	Hub, High Clutch (24T 3.500" OD) (RE4F04A, RE4F04B) (Exc 3.5L)	1	92-06	83575BA	N.L.
406D	Forward (JF403E, LJ4A-EL)	1	90-02	83554AE	N.L.
406D	Forward (RE4F04A, RE4F04B, 4F20E)	1	92-06	83554BA	N.L.
N.I.	Piston, High Clutch Balance (Bonded) (RE4F04B)	1	03-06	83965BB	N.L.
N.I.	Drum Saver Kit, Reverse	1	90-06	83854K	N.L.
PLANETS AND COMPONENTS					
240B	Front (33T) (RE4F04A, RE4F04B, 4F20E)	1	90-06	83582BA	N.L.
248B	Rear (42T Sun Gear) (RE4F04A, RE4F04B, 4F20E)	1	92-06	83584BA	N.L.
254B	Ring Gear, Rear (.990" Tall Sprag Race) (RE4F04A, RE4F04B, 4F20E)	1	92-06	83594BA	N.L.
N.I.	Geartrain (Fits 37T Sun Gear) (JF403E, LJ4A-EL)	1	92-02	83583B	N.L.
N.I.	Geartrain (Fits 42T Sun Gear) (RE4F04A, 4F20E)	1	92-06	83583AA	N.L.
ONE WAY CLUTCHES					
224B	Sprag Assembly, Low (18 Roller)	1	90-06	83642B	N.L.
302C	Sprag, Forward (.530" Wide Lugs) (RE4F04A, RE4F04B, 4F20E)	1	92-06	83658BA	31484-80X00

RE4F04A, RE4F04B, (4F20E), JF403E, LJ4A-EL

ILL.		Qty.	Year	Part #	Ref. #
VALVE BODIES & GOVERNORS					
426D	Valve Body (LJ4A-EL)	1	95-02	83740-1	N.L.
426D	Valve Body (RE4F04A) (Long Wire)	1	92-06	83740-2	N.L.
426D	Valve Body (RE4F04B) (Short Wire)	1	00-06	83740-4	N.L.
DIFFERENTIALS					
514E	Differential Assembly, Viscous (4F20E)	1	92-06	83715BF	N.L.
514E	Differential Assembly, Viscous (RE4F04V)	1	92-06	83715C	N.L.
MISCELLANEOUS COMPONENTS					
236B	Cushion Spring, Low/ Rev Clutch (No Lug, 5.965" ID)	1	90-06	83857B	F3XZ7B070AA
TECHNICAL MANUALS					
N.I.	Tech Manual (RE4F04A)	1	92-06	83400B	N.L.
N.I.	Tech Manual (4F20E)	1	92-06	83400D	N.L.

Notes

FWD
4 SPEED

RE4F04A, RE4F04B, (4F20E), JF403E, LJ4A-EL

Notes

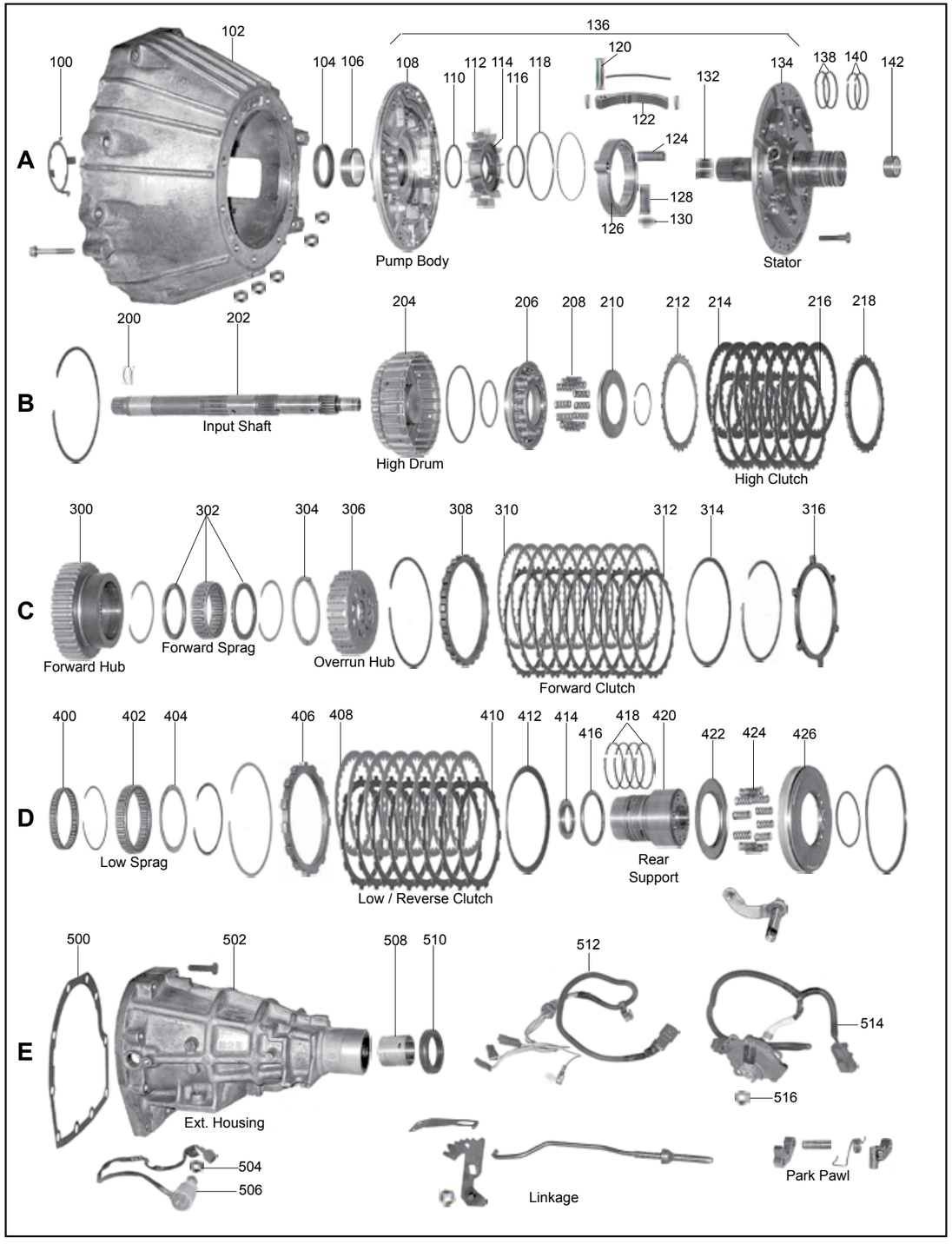
A
B
C
D
E
100
102
104
106
108
110
112
114
116
118
120
122
124
126
128
130
132
134
136
138
140
142
Pump Body
Stator
200
202
204
206
208
210
212
214
216
218
Input Shaft
High Drum
High Clutch
300
302
304
306
308
310
312
314
316
Forward Hub
Forward Sprag
Overrun Hub
Forward Clutch
400
402
404
406
408
410
412
414
416
418
420
422
424
426
Low Sprag
Low / Reverse Clutch
Rear
Support
500
502
504
506
508
510
512
514
516
Ext. Housing
Linkage
Park Pawl

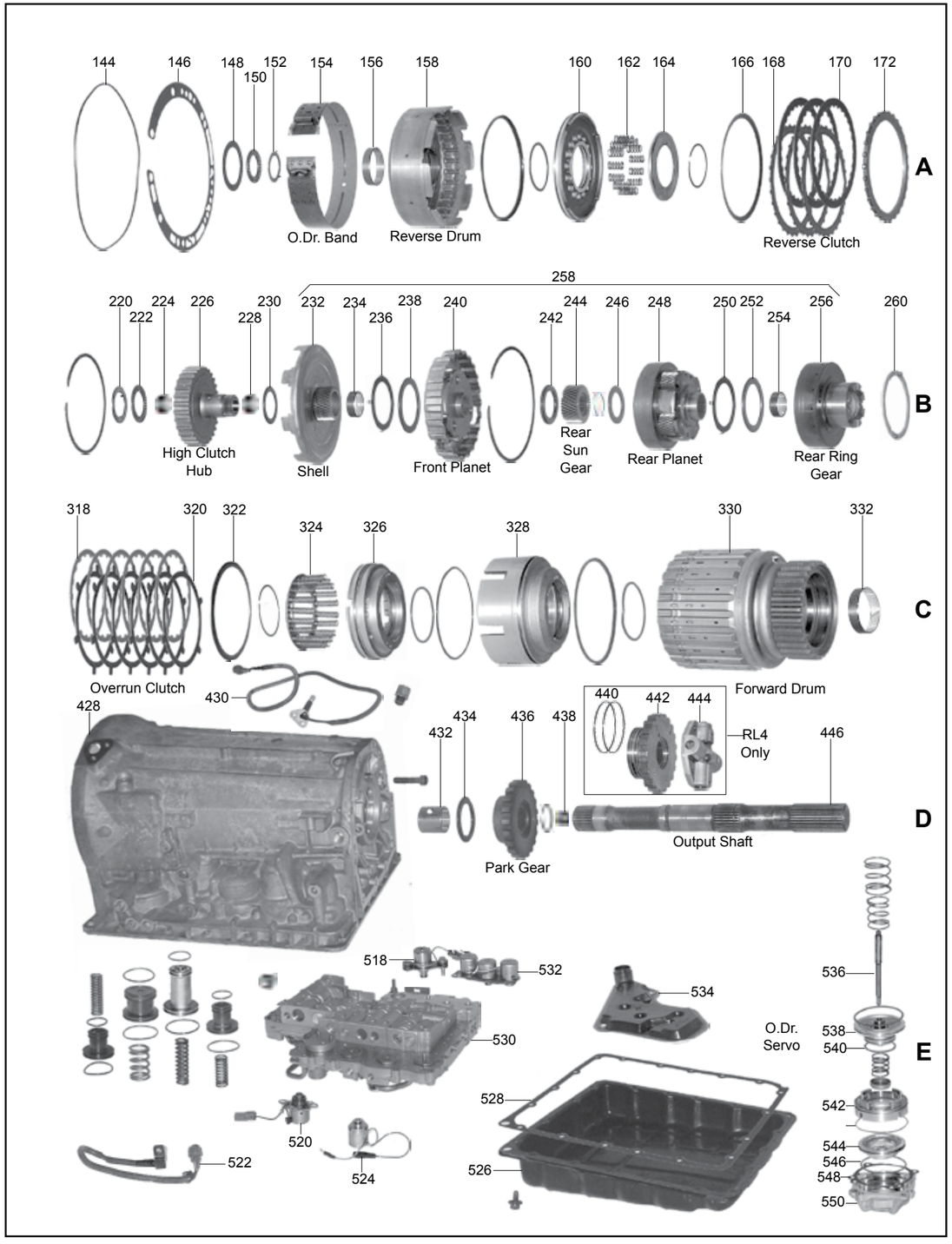
A
B
C
D
E
144
146
148
150
152
154
156
158
160
162
164
166
168
170
172
O.Dr. Band
Reverse Drum
Reverse Clutch
220
222
224
226
228
230
232
234
236
238
240
242
244
246
248
250
252
254
256
258
260
High Clutch
Hub
Shell
Front Planet
Rear
Sun
Gear
Rear Planet
Rear Ring
Gear
318
320
322
324
326
328
330
332
Overrun Clutch
Forward Drum
428
430
432
434
436
438
440
442
444
446
RL4
Only
Park Gear
Output Shaft
518
530
532
534
536
538
540
542
544
546
548
550
O.Dr.
Servo
520
522
524
526
528

ILL.		Qty.	Year	Part #	Ref. #
MASTER OVERHAUL KITS (WITH STEELS)					
N.I.	Nissan (2wd Exc 300ZX Non Turbo, Infiniti J30) (All Mazda)	1	89-92	73006A	N.L.
N.I.	Nissan (2wd Exc 300ZX Non Turbo, Infiniti J30) (All Mazda 93-1/95)	1	93-E96	73006AB	N.L.
N.I.	Nissan (4wd, Also 300ZX Non Turbo, Infiniti J30)	1	87-92	73006B	N.L.
N.I.	Nissan (4wd, Also 300ZX Non Turbo, Infiniti J30) (All Mazda 1/95-98)	1	93-E96	73006BB	N.L.
N.I.	Nissan (Exc 1/00-04 Pathfinder& QX4, 01-04 Supercharged Frontier, Xterra)	1	L96-Up	73006D	N.L.
N.I.	Nissan (1/00-04 Pathfinder & QX4, 01-04 Supercharged Frontier & Xterra)	1	E00-04	73006H	N.L.
N.I.	Nissan (RE5R01A) (5 Speed) (Non USA)	1	91-Up	73006R	N.L.
MASTER OVERHAUL KITS (LESS STEELS)					
N.I.	Nissan (2wd Exc 300ZX Non Turbo, Infiniti J30) (All Mazda)	1	89-92	73004A	N.L.
N.I.	Nissan (2wd Exc 300ZX Non Turbo, Infiniti J30) (All Mazda 93-1/95)	1	93-E96	73004AB	N.L.
N.I.	Nissan (4wd, Also 300ZX Non Turbo, Infiniti J30)	1	87-92	73004BF	N.L.
N.I.	Nissan (4wd, Also 300ZX Non Turbo, Infiniti J30) (All Mazda 1/95-98)	1	93-E96	73004BB	N.L.
N.I.	Nissan (Exc 1/00-04 Pathfinder& QX4, 01-04 Supercharged Frontier, Xterra)	1	L96-Up	73004D	N.L.
N.I.	Nissan (1/00-04 Pathfinder & QX4, 01-04 Supercharged Frontier & Xterra)	1	E00-04	73004H	N.L.
N.I.	Nissan (RE5R01A) (5 Speed) (Non USA)	1	91-Up	73004R	N.L.
OVERHAUL KITS (WITH RINGS AND SEALS)					
N.I.	RL4R01A, RE4R01A, R4A-EL (4 Speed)	1	87-Up	73002A	N.L.
N.I.	RE5R01A (5 Speed) (Non USA)	1	91-Up	73002R	N.L.
GASKETS & O-RINGS					
144A	O-Ring, Pump	1	87-Up	73311	31526-41X01
146A	Gasket, Pump	1	87-Up	73310A	31366-51X00
500E	Gasket, Extension Housing	1	87-Up	73305A	31338-41X00
528E	Gasket, Bottom Pan	1	87-Up	73300	31397-41X01
N.I.	Gasket Kit, Valve Body (RE4R01A, R4A-EL)	1	87-Up	73320K	N.L.
N.I.	O-Ring, Filter	1	87-Up	73379	N.L.
METAL CLAD SEALS					
100A	Seal Retainer, Front Seal Lock	1	87-Up	73089	N.L.
104A	Front	1	87-Up	93070	31344-21X00
510E	Extension Housing (Nissan, Infiniti)	1	87-Up	53074B	31336-X8000
510E	Extension Housing (Mazda Exc. 93-Up RX7)	1	87-Up	53074D	M502-17-335A
510E	Extension Housing (Mazda 93-Up RX7)	1	93-Up	73074B	BV65-19-437
510E	Adapter Housing (Mazda 4wd)	1	87-Up	73074C	M504-13-335
510E	Adapter Housing (Nissan 4wd)	1	87-Up	73074D	31336-X6901
516E	Manual Lever	1	87-Up	73072	31375-41X00
SEALING RINGS & KITS					
N.I.	Ring Kit	1	87-Up	73175K	N.L.
FRICTION PLATES					
170A	Reverse (.079") (30T)	2	93-Up	73110AA	31532-41X19
170A	Reverse (.079") (34T)	2	87-92	93110A	31532-AA030
214B	High (.063") (30T)	4-5	87-Up	93106B	31532-AA050
310C	Forward (.063") (36T)	5-8	87-Up	73108A	31532-AA110
310C	Forward (.079") (36T)	5-6	89-Up	73108	31532-AA060
318C	Overrun (.079") (18T)	3	87-Up	73116	31532-AA070
408D	Low/ Reverse (.079") (30T)	6-8	87-Up	73114	31662-AA050
408D	Low/ Reverse (.063")	5-7	L96-Up	23114A	31532-41X69
N.I.	Reduction Brake (RE5R01A Only)	3	91-Up	73102M	31532-60X02
N.I.	Reduction Direct (RE5R01A Only)	3	91-Up	73106M	31532-60X03
STEEL PLATES					
168A	Reverse (.079") (5.080" ID)	2	93-Up	73130B	31536-AA100
168A	Reverse (.079") (5.350" ID)	2	87-92	93130A	31536-AA000
168A	Reverse (.110") (5.080" ID) (V-Tooth)	2	00-Up	73130C	31536-41X20
216B	High (.067")	4-7	87-Up	73126	31536-41X04
216B	High (.079")	3-5	87-Up	93126BA	31536-41X03
216B	High (.118")	AR	87-Up	93126B	31536-AA030
312C	Forward (.071") (24T)	6-8	87-Up	73128	31536-41X13
312C	Forward (.079") (24T)	6	89-Up	73128A	31536-AA080
320C	Overrun (.079") (4.700" ID) (6T)	3-5	87-Up	73136	31536-AA090
410D	Low/ Reverse (.079") (14T)	6-8	87-Up	73134	31666-AA020
N.I.	Reduction Brake (.079") (RE5R01A Only)	1	91-Up	73120	31536-60X03

ILL.		Qty.	Year	Part #	Ref. #
STEEL PLATES (Cont.)					
N.I.	Reduction Brake (.102") (RE5R01A Only)	2	91-Up	73120A	31536-60X02
N.I.	Reduction Direct (RE5R01A Only)	5	91-Up	73122	31536-60X00
PRESSURE PLATES					
172A	Reverse Clutch (5.0mm) (30T)	1	87-Up	73150AB	N.L.
218B	High Clutch (3.6mm) (27T)	1	87-Up	73146A	31537-41X61
218B	High Clutch (4.0mm) (27T)	1	87-Up	73146AB	31567-41X63
218B	High Clutch (4.2mm) (27T)	1	87-Up	73146AC	N.L.
218B	High Clutch (4.4mm) (27T)	1	87-Up	73146AD	31537-41X65
FILTERS					
534E	Nissan 4 Cyl 2wd (.125" Pick-Up Tube)	1	90-Up	73010AA	31728-48X00
534E	Nissan (6 Cyl 2wd) (.300" Pick-Up Tube)	1	89-Up	73010A	31728-41X00
534E	Nissan 4wd (.750" Pick-Up Tube)	1	87-Up	73010B	31728-41X03
534E	Nissan 4wd (.900" Pick-Up Tube)	1	87-Up	73010D	31728-41X01
534E	Mazda (Exc. RX7) (.900" Pick-Up Tube)	1	89-Up	73010D	BV92-19-815
534E	Mazda RX7 (1.875" Pick-Up Tube)	1	93-96	73010C	BV65-19-815
FILTER KITS					
N.I.	Nissan (4 Cyl 2wd) (.125" Pick-Up Tube)	1	90-Up	73011AA	N.L.
N.I.	Nissan (6 Cyl 2wd) (.300" Pick-Up Tube)	1	89-Up	73011A	N.L.
N.I.	Nissan (6 Cyl 2wd) (.900" Pick-Up Tube) (2) (12/98-Up)	1	L98-Up	73011BA	N.L.
N.I.	Nissan (4wd) (.900" Pick-Up Tube)	1	87-Up	73011BA	N.L.
N.I.	Mazda (Exc. RX7 (.900" Pick-Up Tube)	1	89-Up	73011BA	N.L.
N.I.	Mazda (RX7) (1.875" Pick-Up Tube)	1	93-96	73011C	N.L.
BANDS					
154A	Overdrive (1.500" Wide) (Dissimilar Ends)	1	87-Up	73020	31630-AA010
154A	Overdrive (1.500" Wide) (Similar Ends)	1	99-Up	93020	31630-21X00
154A	Overdrive (2.362" Wide) (Similar Ends) (1/00-04)	1	L00-04	73020A	31630-4AX00
BUSHINGS					
N.I.	Bushing Kit	1	87-Up	73030	N.L.
106A	Pump Body	1	87-Up	93034	31343-21X01
132A	Stator (Front) (.845" ID)	1	87-Up	73036	N.L.
132A	Stator (Front) (.945" ID)	1	87-Up	73036A	31405-41X02
142A	Stator (Rear)	1	87-Up	93037	31363-21X01
156A	Reverse Drum	1	87-Up	93046	31513-21X00
234B	Front Sun Gear (Shell)	1	87-Up	93052	31462-21X04
254B	Rear Ring Gear	1	87-Up	73060	N.L.
332C	Forward Drum	1	87-Up	73048	N.L.
432D	Case (1.266" ID)	2	87-Up	73064	31405-41X00
432D	Case (Bronze 1 Piece)	1	87-Up	73064B	N.L.
438D	Output Shaft (Front)	1	87-Up	73062	N.L.
508E	Extension Housing	1	87-Up	73066	31332-X8000R
N.I.	High Clutch Hub	2	87-Up	73054	31548-21X01
THRUST WASHERS/BEARINGS					
WASHERS					
148A	Stator to Reverse Drum .035" (Plastic)	1	87-Up	93211A	31528-21X01
148A	Stator to Reverse Drum .043" (Plastic)	1	87-Up	93211B	31528-21X02
148A	Stator to Reverse Drum .067" (Plastic)	1	87-Up	93211E	31528-21X05
304C	Rear Planet Ring Gear to Clutch Hub 3 13/16" OD (Plastic)	2	87-Up	73254	31508-41X01
BEARINGS					
N.I.	Bearing Kit, w/ Washers	1	87-Up	73201A	N.L.
N.I.	Bearing Kit, Planet Assembly	1	87-Up	73201	N.L.
150A	Bearing w/ Race, Stator to High Drum	1	87-Up	73220	31407-41X07
152A	Race, Stator to High Drum .055" (Metal w/ 3 Outer Tabs)	1	87-Up	93221AB	31429-21X03
152A	Race, Stator to High Drum .063" (Metal w/ 3 Outer Tabs)	1	87-Up	93221AC	31429-21X04
152A	Race, Stator to High Drum .079" (Metal w/ 3 Outer Tabs)	1	87-Up	93221AE	31429-21X06
220B	Race, High Drum to Hub (Metal w/ 3 Inner Tabs)	1	87-Up	73228	31439-21X00
222B	Bearing w/ Race, High Drum to Hub (Also High Hub to Sun Shell)	2	87-Up	53232	31436-X0100
236B	Race, Shell to Front Planet & Rear Planet to Ring Gear	2	87-Up	73243	31464-21X00
238B	Bearing w/ Race, Shell to Front Planet & Rear Planet to Rear Ring Gear	2	87-Up	73244	31435-21X00

ILL.		Qty.	Year	Part #	Ref. #
BEARINGS (Cont.)					
242B	Bearing w/ Race, Front Planet to Rear Sun Gear	1	87-Up	73238	31407-41X08
246B	Bearing w/ Race, Rear Sun Gear to Rear Planet	1	87-Up	73247	31455-21X00
414D	Bearing w/ Race, Overrun Hub to Rear Support	1	87-Up	73260	31407-41X04
414D	Bearing w/ 2 Races, Overrun Hub to Rear Support	1	87-Up	73260A	31407-41X11
416D	Bearing, Forward Drum to Hub (Update Replaces Bearing w/ Race)	2	87-Up	73232B	31407-41X05
434D	Bearing w/ Race, Case to Park Gear	1	87-Up	73263	31407-41X06
ELECTRICAL COMPONENTS					
520E	Solenoid, Lock-Up (RE4, JR403A) (Non PWM)	1	87-Up	73425	31940-41X10
520E	Solenoid, Lock-Up (R4A-EL) (PWM) (Some Mazda) (2 Piece)	1	92-Up	73425B	BV65-21-1D1
520E	Solenoid, Lock-Up (RL4)	1	90-Up	73425A	31940-48X02
520E	Solenoid, Overdrive Cancel (RL)	1	90-Up	73425A	31940-48X02
532E	Solenoid Assembly (4 Solenoids)	1	L88-Up	73420A	31940-41X09
VALVE BODY RECALIBRATION KITS					
N.I.	Shift Kit® (Transgo®)	1	88-Up	T73165A	SK® RE4R01A
PUMPS					
136A	Pump Complete (Front Stator Bushing Input OD .845") (RL4R01A w/ Lugs)	1	87-Up	73500A	N.L.
136A	Pump Complete (Front Stator Bushing Input OD .845") (RL4R01A w/ Flats)	1	87-Up	73500AE	N.L.
136A	Pump Complete (Front Stator Bushing Input OD .945") (w/ Sensor)	1	87-Up	73500AB	N.L.
136A	Pump Complete (Front Stator Bushing Input OD .945") (w/o Sensor)	1	87-Up	73500AA	N.L.
136A	Pump Complete (Milled Flats on Rotor) (w/ Sensor)	1	87-Up	73500AC	N.L.
136A	Pump Complete (Milled Flats on Rotor) (w/o Sensor)	1	87-Up	73500AD	N.L.
DRUMS & COMPONENTS					
158A	Reverse (1.575" Band)	1	87-Up	73556	31511-41X04
158A	Reverse (2.360" Band) (3.5L)	1	02-Up	73556B	31511-41X06
166A	Reverse Drum Saver Kit (Waved Cushion Plate Fix by Alto)	1	87-92	73854K	N.L.
166A	Reverse Drum Saver Kit (Waved Cushion Plate Fix by Alto)	1	93-Up	73854AK	N.L.
166A	Reverse Drum Saver Kit	1	87-92	73854K	N.L.
166A	Reverse Drum Saver Kit	1	93-Up	73854AK	N.L.
204B	High (w/ 34T Reverse Hub) (can use 93555)	1	87-92	73555	N.L.
204B	High (w/ 30T Reverse Hub) (1.575" Band)	1	93-Up	73555A	N.L.
226B	Clutch Hub, High (All 87-89) (4WD 90-Up)	1	87-Up	73575	269165E
226B	Clutch Hub, High (90-Up 2wd)	1	90-Up	73575A	N.L.
300C	Clutch Hub, Forward (1.330" Tall At Clutch Splines)	1	87-Up	73574	N.L.
306C	Clutch Hub, Overrun	1	87-Up	73579	31591-41X01
330C	Forward (Low/ Reverse Spline Length 1.645")	1	87-Up	73554A	31571-41X26
330C	Forward (Low/ Reverse Spline Length 1.765")	1	87-Up	73554	N.L.
PLANETS AND COMPONENTS					
240B	Front (No Groove)	1	87-Up	73582A	31420-41X08
N.I.	Planet Kit (5 Piece) (37T Rear Sun Gear)	1	87-Up	73583	N.L.
N.I.	Planet Kit (5 Piece) (42T Rear Sun Gear)	1	87-Up	73583B	N.L.
SHELLS & SUPPORTS					
420D	Rear Support (2nd Design)	1	87-Up	73668A	N.L.
ONE WAY CLUTCHES					
302C	Sprag, Forward	1	87-Up	73656	31484-41X00
402D	Sprag, Low Sprag (30 Elements)	1	87-92	73658	31571-41X26
402D	Sprag, Low Sprag (34 Elements)	1	87-Up	73658A	31473-41X02
SHAFTS					
202B	Input Shaft (12.375" Long, w/ 18 Spline on Converter End)	1	87-Up	73670AE	N.L.
202B	Input Shaft (12.375" Long, w/ 20 Spline on Converter End)	1	87-Up	73670	N.L.
446D	Output Shaft, 4wd (13" Long, w/ 30 Splines)	1	87-Up	73678AA	N.L.
446D	Output Shaft, 4wd (13.625" Long, w/ 30 Splines)	1	87-Up	73678	N.L.
VALVE BODIES & GOVERNORS					
444D	Governor, RL4R01A	1	87-Up	73680A	N.L.
530E	Valve Body RL4R01A (2 Solenoids)	1	87-Up	73740-3	N.L.
530E	Valve Body RE4R01A (5 Solenoids)	1	87-Up	73740-2	N.L.
530E	Valve Body R4A-EL (Mazda) (5 Solenoid)	1	89-98	73740-1	N.L.
530E	Valve Body R4A-EL (Mazda) (6 Solenoid)	1	92-Up	73740-4	N.L.

ILL.		Qty.	Year	Part #	Ref. #
MISCELLANEOUS COMPONENTS					
N.I.	Sleeve, Governor Bore (Non Electronic Units Only)	1	87-89	73761A-2	69835
TECHNICAL MANUALS					
N.I.	Tech Manual, RE4R01A	1	87-Up	73400	N.L.
N.I.	Tech Manual, RL4R01A	1	87-Up	73400A	N.L.

Notes

ILL.		Qty.	Year	Part #	Ref. #
MASTER OVERHAUL KITS (WITH STEELS)					
N.I.	RE4R03A (300ZX w/ Twin Turbo)	1	90-Up	73006QC	N.L.
N.I.	RE4R03A (Infiniti Q45 V8)	1	90-Up	73006QD	N.L.
N.I.	RG4R01A, JR403E	1	88-Up	73006G	N.L.
MASTER OVERHAUL KITS (LESS STEELS)					
N.I.	RE4R03A (300ZX w/ Twin Turbo)	1	90-Up	73004QC	N.L.
N.I.	RE4R03A (Infiniti Q45 V8)	1	90-Up	73004QD	N.L.
N.I.	RG4R01A, JR403E	1	88-Up	73004G	N.L.
OVERHAUL KITS (WITH RINGS AND SEALS)					
N.I.	RE4R03A	1	90-Up	73002Q	N.L.
N.I.	RG4R01A, JR403E	1	88-Up	73002G	N.L.
GASKETS & O-RINGS					
144A	O-Ring, Pump	1	88-Up	73311	31526-41X01
146A	Gasket, Pump (RE4R03A)	1	90-Up	73310A	31366-51X00
146A	Gasket, Pump (RG4R01A, JR403E)	1	88-Up	73310G	N.L.
500E	Gasket, Extension Housing (RE4R03A)	1	88-96	73305A	31338-41X00
528E	Gasket, Bottom Pan	1	88-Up	73300G	31397-51X00
N.I.	Seal, Center Support to Case (RG4R01A, JR403E)	4	88-Up	73344	94483324
METAL CLAD SEALS					
100A	Front Seal Retainer	1	90-Up	73089	N.L.
104A	Front	1	88-Up	93070	31344-21X00
510E	Extension Housing (RE4R03A)	1	90-Up	73074Q	31375-51X01
510E	Extension Housing (RG4R01A, JR403E) (Nissan) (2.920")	1	88-Up	73074G	N.L.
510E	Extension Housing (RG4R01A, JR403E) (Isuzu, GM) (2.450")	1	88-Up	73074H	94483329
510E	Adapter Housing (4wd) (RG4R01A, JR403E) (Nissan)	1	88-Up	73074D	31336-X6901
516E	Manual Lever	1	88-Up	73072	31375-41X00
SEALING RINGS & KITS					
N.I.	Ring Kit (RE4R03A)	1	88-Up	73175K	N.L.
N.I.	Ring Kit (RG4R01A, JR403E)	1	88-Up	73175GK	N.L.
FRICTION PLATES					
170A	Reverse (.075") (64T)	3	88-Up	73110G	31532-51X05
214B	High (.063") (64T)	6-7	88-Up	73106G	31532-51X04
310C	Forward (.079") (50T)	7-9	88-Up	73108G	31532-51X01
318C	Overrun (.063") (RE4R03A 300ZX Turbo)	5	88-Up	73116Q	31532-51X02
318C	Overrun (.079") (RE4R03A Infiniti) (JR403E)	5	88-Up	73116G	31532-51X06
408D	Low/ Reverse (.063") (33T)	7-8	88-Up	73114G	31532-51X09
STEEL PLATES					
168A	Reverse (.079") (40T)	3	88-Up	73126Q	31536-51X00
216B	High (.079") (40T)	7-10	88-Up	73126Q	31536-51X00
216B	High (.118") (40T)	7	88-Up	73126G	31536-51X04
312C	Forward (.079") (36T)	7-14	88-Up	73128G	31536-51X07
320C	Overrun (.079") (6T)	5-7	88-Up	73136G	31536-51X02
410D	Low/ Reverse (.079") (11T)	6-9	88-Up	73134G	31666-51X00
PRESSURE PLATES					
172A	Reverse (4.4mm) (40T)	1	88-Up	73146G	N.L.
218B	High (4.4mm) (40T)	1	88-Up	73146G	N.L.
FILTERS					
534E	RE4R03A (No Pick-Up Tube)	1	89-Up	73010Q	31728-51X02
534E	RG4R01A, JR403E (w/ Pick-up Tube)	1	88-Up	73010B	31728-41X03
FILTER KITS					
N.I.	RE4R03A (No Pick-Up Tube)	1	89-Up	73011Q	N.L.
N.I.	RG4R01A, JR403E (w/ Pick-up Tube)	1	88-Up	73011BG	N.L.
BANDS					
154A	Overdrive	1	88-Up	73020G	31630-51X02

ILL.		Qty.	Year	Part #	Ref. #
BUSHINGS					
N.I.	Bushing Kit	1	88-Up	73030G	N.L.
106A	Pump Body	1	88-Up	93034	31343-21X01
THRUST WASHERS/BEARINGS					
WASHERS					
148A	Stator to Reverse Drum .035" (Plastic)	1	88-Up	93211A	31528-21X01
148A	Stator to Reverse Drum .043" (Plastic)	1	88-Up	93211B	31528-21X02
148A	Stator to Reverse Drum .067" (Plastic)	1	88-Up	93211E	31528-21X05
260B	Rear Planet Ring Gear to Clutch Hub	1	88-Up	73254G	31508-51X08
BEARINGS					
N.I.	Bearing Kit (RE4R03A)	1	88-Up	73201Q	N.L.
N.I.	Bearing Kit (RG4R01A, JR403E)	1	88-Up	73201GB	N.L.
ELECTRICAL COMPONENTS					
520E	Solenoid, Lock-Up (Non PWM)	1	88-Up	73425	31940-41X10
532E	Solenoid Assy (4 Solenoids, 2 Insulated Connectors, 1 Ground Wire)	1	88-Up	73420A	31940-41X09
VALVE BODY RECALIBRATION KITS					
N.I.	Shift Kit® (RE4R03A, RG4R01A, JR403E) (Transgo®)	1	88-Up	T73165A	SK® RE4R01A
PUMPS					
136A	Pump Complete (RE4R03A) (w/ Sensor)	1	90-Up	73500Q	N.L.
136A	Pump Complete (RE4R03A) (w/o Sensor)	1	90-Up	73500QA	N.L.
136A	Pump Complete (RG4R01A, JR403E)	1	88-Up	73500G	N.L.
DRUMS & COMPONENTS					
158A	Reverse	1	88-Up	73556G	N.L.
204B	High (6 Clutch) (RG4R01A, JR403E)	1	88-Up	73555G	N.L.
330C	Forward w/o Sprag (9.125" Tall) (RG4R01A, JR403E)	1	88-Up	73554G	N.L.
PLANETS AND COMPONENTS					
N.I.	Planet Kit (5 Piece) (44T Rear Sun Gear) (RG4R01A, JR403E)	1	88-Up	73583G	N.L.
N.I.	Planet Kit (5 Piece) (51T Rear Sun Gear) (RE4R03A)	1	88-Up	73583Q	N.L.
N.I.	Planet Kit (5 Piece) (58T Rear Sun Gear) (RE4R03A)	1	88-Up	73583QD	N.L.
SHELLS & SUPPORTS					
N.I.	Front Support (Reverse Clutch Drum Support) (RG4R01A, JR403E)	1	88-Up	73630G	N.L.
ONE WAY CLUTCHES					
302C	Forward Sprag	1	88-Up	73656G	31484-51X00
402D	Low Sprag	1	88-Up	73658Q	31473-51X00
VALVE BODIES & GOVERNORS					
530E	Valve Body (JR403E)	1	90-Up	73740-5	N.L.
530E	Valve Body (5 Solenoids, 3 Connectors) RE4R03A	1	90-Up	73740-6	N.L.
TECHNICAL MANUALS					
N.I.	Tech Manual, RG4R01A, JR403E Electromatic	1	88-Up	73400G	N.L.

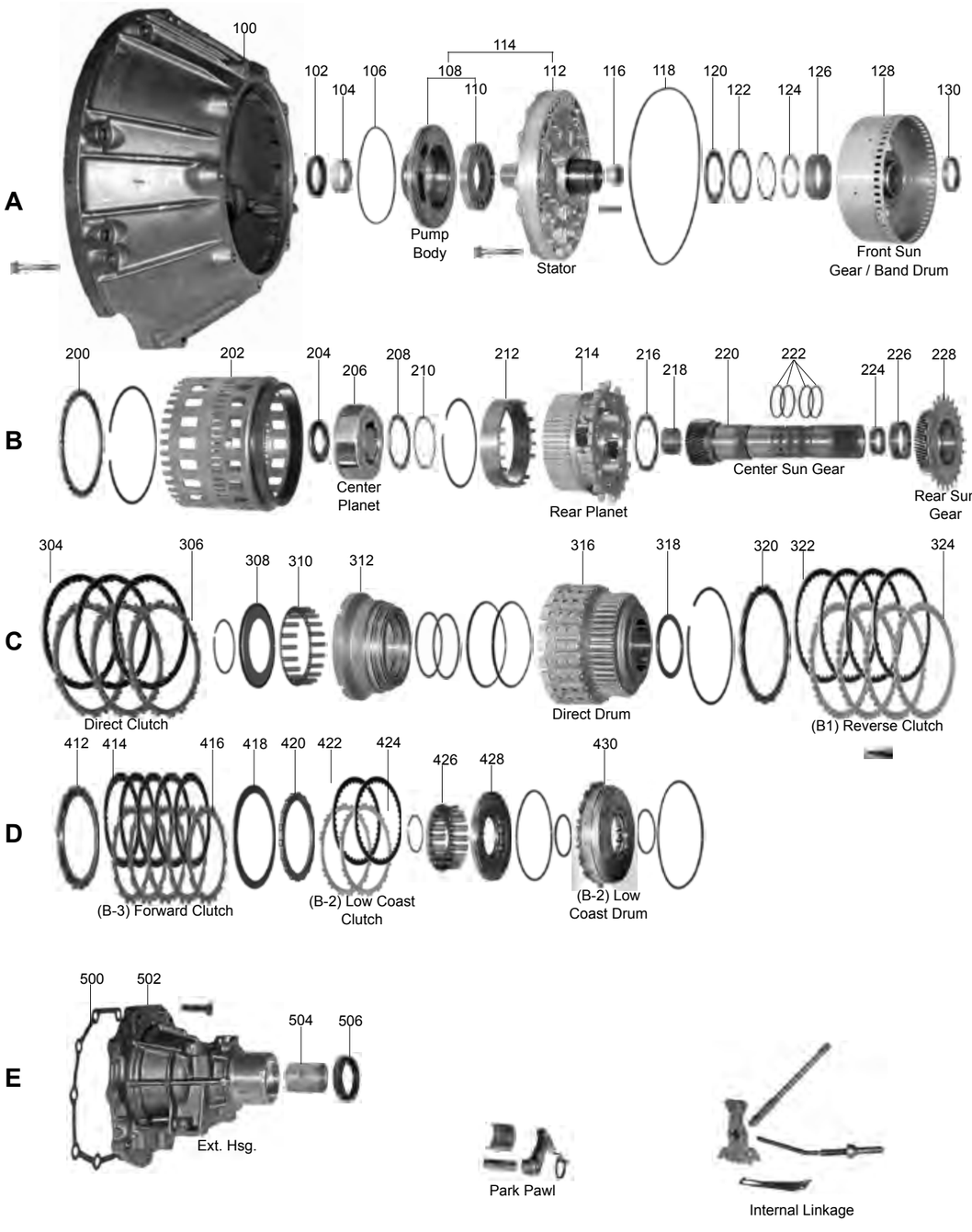
A
100
102
104
106
108
110
112
114
116
118
120
122
124
126
128
130
Pump Body
Stator
Front Sun Gear / Band Drum
B
200
202
204
206
208
210
212
214
216
218
220
222
224
226
228
Center Planet
Rear Planet
Center Sun Gear
Rear Sun Gear
C
304
306
308
310
312
316
318
320
322
324
Direct Clutch
Direct Drum
(B1) Reverse Clutch
D
412
414
416
418
420
422
424
426
428
430
(B-3) Forward Clutch
(B-2) Low Coast Clutch
(B-2) Low Coast Drum
E
500
502
504
506
Ext. Hsg.
Park Pawl
Internal Linkage

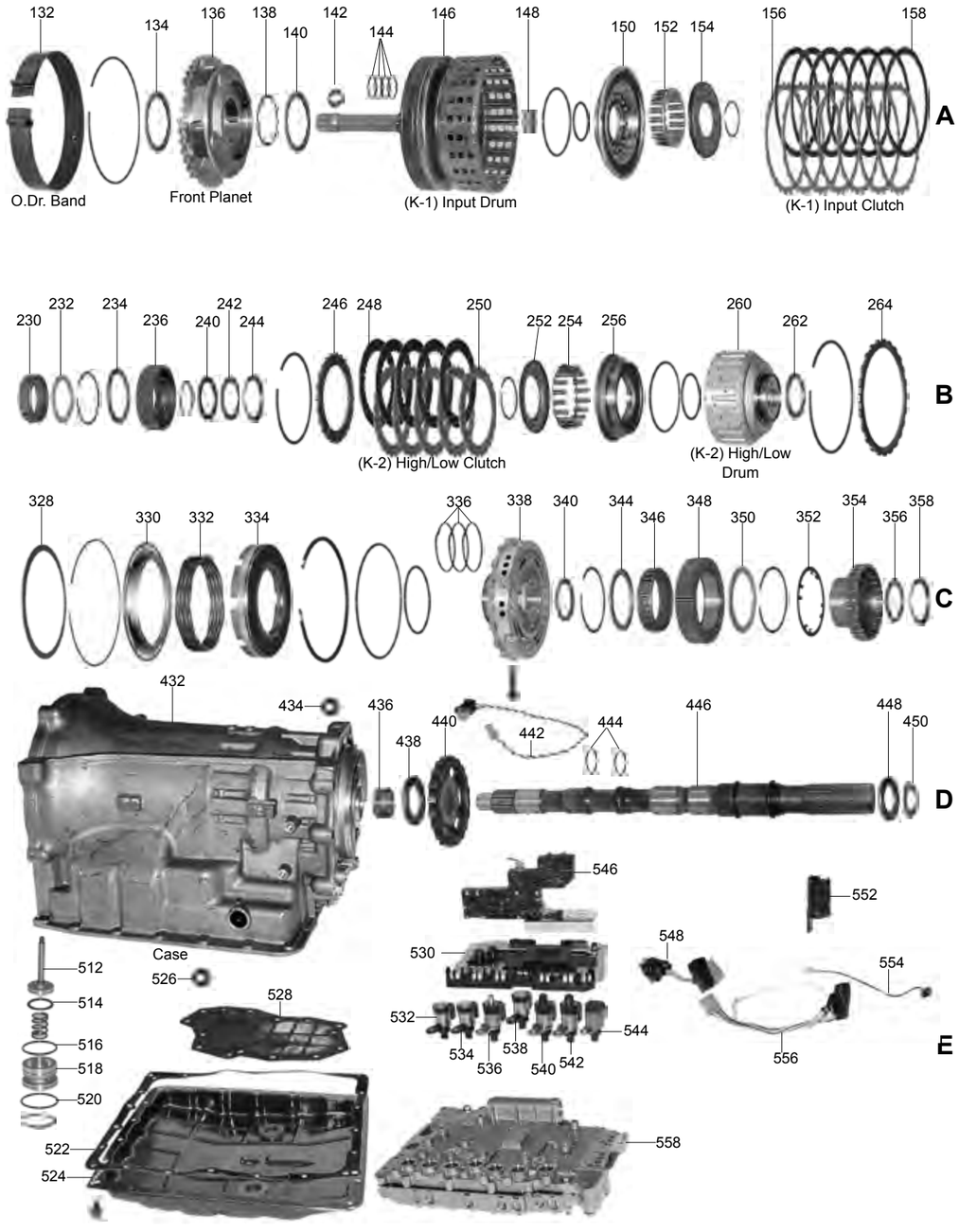
A
132
134
136
138
140
142
144
146
148
150
152
154
156
158
O.Dr. Band
Front Planet
(K-1) Input Drum
(K-1) Input Clutch
B
230
232
234
236
240
242
244
246
248
250
252
254
256
260
262
264
(K-2) High/Low Clutch
(K-2) High/Low Drum
C
328
330
332
334
336
338
340
344
346
348
350
352
354
356
358
D
432
434
436
438
440
442
444
446
448
450
Case
E
512
514
516
518
520
522
524
526
528
530
532
534
536
538
540
542
544
546
548
552
554
556
558

ILL.		Qty.	Year	Part #	Ref. #
MASTER OVERHAUL KITS (WITH STEELS)					
N.I.	RE5R05A (Exc. Titan, Armada, QX56) (w/ 50T Reverse Friction)	1	02-Up	173006	N.L.
N.I.	RE5R05A (Titan, Armada, QX56) (w/ 40T Reverse Friction)	1	04-Up	173006A	N.L.
N.I.	RE5R05A (Pathfinder)	1	05-Up	173006C	N.L.
MASTER OVERHAUL KITS (LESS STEELS)					
N.I.	RE5R05A (Exc. Titan, Armada, QX56) (w/ 50T Reverse Friction)	1	02-Up	173004	N.L.
N.I.	RE5R05A (Titan, Armada, QX56) (w/ 40T Reverse Friction)	1	04-Up	173004A	N.L.
N.I.	RE5R05A (Pathfinder)	1	05-Up	173004C	N.L.
OVERHAUL KITS (WITH RINGS AND SEALS)					
N.I.	RE5R05A	1	02-Up	173002	N.L.
BONDED PISTONS					
154A	Retainer, Input Clutch Balance (Bonded)	1	02-Up	173984	N.L.
252B	Retainer, Hi-Low/Rev Clutch Balance (Bonded)	1	02-Up	173987	N.L.
308C	Retainer, Direct Clutch Balance (Bonded)	1	02-Up	173985	N.L.
GASKETS & O-RINGS					
522E	Gasket, Pan (Fiber) (Exc 05-Up Kia)	1	02-Up	173300	N.L.
522E	Gasket, Pan (Fiber) (05-Up Kia)	1	05-Up	173300A	N.L.
N.I.	Valve Body Gasket Kit	1	02-Up	173320K	N.L.
METAL CLAD SEALS					
102A	Converter (Front)	1	02-Up	93070	31344-21X00
506E	Rear (2wd)	1	02-Up	73074D	31336-X6901
506E	Rear (4wd)	1	02-Up	173074	N.L.
526E	Shift Lever	2	02-Up	173072	91209-612-003
FRICTION PLATES					
158A	Input	7	02-Up	173100	N.L.
248B	High & Low/ Reverse	5	02-Up	173114	N.L.
304C	Direct	5-6	02-Up	173106	N.L.
322C	Reverse (40T) (Titan, Armada, QX56)	7	04-Up	173110A	N.L.
322C	Reverse (50T) (Exc Titan, Armada, QX56)	6	02-Up	173110	N.L.
414D	Forward	5	02-Up	173108	N.L.
422D	Low Coast	3	02-Up	173112	N.L.
STEEL PLATES					
156A	Input	7	02-Up	173120	N.L.
250B	High & Low/ Reverse (Narrow Teeth) (Exc Titan, Armada, Q56)	5	02-Up	173134	N.L.
250B	High & Low/ Reverse (Wide Teeth) (Titan, Armada, Q56)	5	04-Up	173134A	N.L.
306C	Direct	5-6	02-Up	173126	N.L.
324C	Reverse (.063") (Titan, Armada, QX56)	7	02-Up	173130A	N.L.
324C	Reverse (.079") (Exc Titan, Armada, QX56)	6	02-Up	173130	N.L.
416D	Forward (18 Wide Teeth) (Exc Titan, Armada, QX56, Pathfinder)	5	02-Up	173128	N.L.
416D	Forward (16 Narrow Teeth) (Titan, Armada, QX56, Pathfinder)	5	04-Up	173128A	N.L.
424D	Low Coast (18 Wide Teeth) (Exc Titan, Armada, QX56, Pathfinder)	3	02-Up	173132	N.L.
424D	Low Coast (15 Narrow Teeth) (Titan, Armada, QX56, Pathfinder)	3	04-Up	173132A	N.L.
FILTERS					
528E	Filter, RE5R05A	1	02-Up	173010	N.L.
FILTER KITS					
N.I.	Filter Kit, RE5R05A	1	02-Up	173011	N.L.
BANDS					
132A	Band, 3-5	1	02-Up	173020	31630-90X00
BUSHINGS					
N.I.	Bushing Kit	1	02-Up	173030	N.L.
N.I.	Pump	1	02-Up	173034	N.L.
ELECTRICAL COMPONENTS					
442D	Sensor, Output Speed	1	02-Up	173436	N.L.
532E	Solenoid, PWM (# 260 130 031) (Line Pressure, TCC, Front Brake Band)	3	02-Up	173421	N.L.
536E	Solenoid, PWM w/ Cap (# 260 130 030) (High-Low/Rev, Input, Direct)	3	02-Up	173425	N.L.

ILL.		Qty.	Year	Part #	Ref. #
ELECTRICAL COMPONENTS (Cont.)					
544E	Solenoid, Low Coast Clutch (12 OHM)	1	02-Up	173431B	N.L.
544E	Solenoid, Low Coast Clutch (28 OHM) (# 260 120 042)	1	02-Up	173431A	N.L.
546E	Switch, MLPS	1	02-Up	173410	N.L.
548E	Connector, Case (w/ Harness) (3 External Plugs)	1	02-Up	173445	N.L.
N.I.	Sensor, TOT	1	02-Up	173437	N.L.
N.I.	Sensor, Input Speed (w/ Press Manifold Switch)	1	02-Up	173438	N.L.
VALVE BODY RECALIBRATION KITS					
N.I.	Reprogramming Kit™ (RE5R05A) (Transgo®)	1	02-08	T173169	N.L.
PUMPS					
114A	Pump Assembly (13 Lug Inner Gear)	1	02-Up	173500	N.L.
PUMP COMPONENTS					
108A	Pump Body w/ Gears	1	02-Up	173510	N.L.
110A	Pump Gears	1	02-Up	173530	N.L.
112A	Pump Cover (5.880" Long Stator Tube)	1	02-Up	173520	N.L.
112A	Pump Cover (6.250" Long Stator Tube)	1	02-Up	173520A	N.L.
DRUMS & COMPONENTS					
146A	Drum, Input (7.400" Tall, 102T Ring Gear)	1	02-Up	173554C	N.L.
146A	Drum, Input (7.400" Tall, 106T Ring Gear)	1	02-Up	173554B	N.L.
146A	Drum, Input (7.750" Tall, 102T Ring Gear)	1	02-Up	173554A	N.L.
146A	Drum, Input (7.750" Tall, 106T Ring Gear)	1	02-Up	173554	N.L.
150A	Piston, Input (Aluminum) (1.180" Thick)	1	02-Up	173964	N.L.
150A	Piston, Input (Aluminum) (1.260" Thick)	1	02-Up	173964A	N.L.
150A	Piston, Input (Aluminum) (1.970" Thick)	1	02-Up	173964B	N.L.
152A	Spring & Retainer, Input	1	02-Up	173974	N.L.
154A	Retainer, Input Clutch Balance (Bonded)	1	02-Up	173984	N.L.
236B	Hub, Hi/Lo (46 Splines)	1	02-Up	173577	N.L.
252B	Retainer, Hi-Low/Rev Clutch Balance (Bonded)	1	02-Up	173987	N.L.
254B	Spring & Retainer, Hi/Lo	1	02-Up	173977	N.L.
256B	Piston, Hi/Lo (Aluminum) (1.050" Thick)	1	02-Up	173967	N.L.
256B	Piston, Hi/Lo (Aluminum) (1.230" Thick)	1	02-Up	173967A	N.L.
260B	Drum, Hi/Lo (2.700" Tall, Aluminum)	1	02-Up	173557B	N.L.
260B	Drum, Hi/Lo (3.150" Tall, Aluminum)	1	02-Up	173557	N.L.
260B	Drum, Hi/Lo (3.150" Tall, Steel)	1	02-Up	173557A	N.L.
308C	Retainer, Direct Clutch Balance (Bonded)	1	02-Up	173985	N.L.
310C	Spring & Retainer, Direct	1	02-Up	173975	N.L.
312C	Piston, Direct (Aluminum) (2.415" Thick)	1	02-Up	173965	N.L.
312C	Piston, Direct (Aluminum) (2.600" Thick)	1	02-Up	173965A	N.L.
316C	Drum, Direct (40T Clutch Hub)	1	02-Up	173555A	N.L.
316C	Drum, Direct (50T Clutch Hub)	1	02-Up	173555	N.L.
332C	Spring & Retainer, Reverse	1	02-Up	173976	N.L.
334C	Piston, Reverse (Aluminum) (1.020" Thick, D Type Seal)	1	02-Up	173966A	N.L.
334C	Piston, Reverse (Aluminum) (1.020" Thick, Lip Seal)	1	02-Up	173966	N.L.
334C	Piston, Reverse (Aluminum) (1.200" Thick, Lip Seal)	1	02-Up	173966B	N.L.
354C	Hub, Low Coast (42 Splines)	1	02-Up	173579	N.L.
426D	Spring & Retainer, Low/Coast	1	02-Up	173979	N.L.
428D	Piston, Low/Coast	1	02-Up	173969	N.L.
430D	Piston, Forward	1	02-Up	173962	N.L.
PLANETS AND COMPONENTS					
136A	Planet, Front (4 Gear) (42T Sun Gear Type)	1	02-Up	173582	N.L.
136A	Planet, Front (4 Gear) (43T Sun Gear Type)	1	02-Up	173582A	N.L.
202B	Ring Gear, Rear w/ Connecting Shell (98T)	1	02-Up	173594A	N.L.
202B	Ring Gear, Rear w/ Connecting Shell (99T)	1	02-Up	173594B	N.L.
202B	Ring Gear, Rear w/ Connecting Shell (110T)	1	02-Up	173594	N.L.
206B	Planet, Center (4 Gear, 24T Pinion Gear) (54T Sun Gear Type)	1	02-Up	173580A	N.L.
206B	Planet, Center (4 Gear, 28T Pinion Gear) (50T Sun Gear Type)	1	02-Up	173580	N.L.
206B	Planet, Center (5 Gear) (53T Sun Gear Type)	1	02-Up	173580B	N.L.
212B	Ring Gear, Center Planet (16 Lugs, 78T)	1	02-Up	173590	N.L.
214B	Planet, Rear (4 Gear, Aluminum) (62T Sun Gear, 110T Ring Gear Type)	1	02-Up	173584	N.L.
214B	Planet, Rear (4 Gear, Aluminum) (62T Sun Gear, 98T Ring Gear Type)	1	02-Up	173584B	N.L.
214B	Planet, Rear (4 Gear, Steel) (62T Sun Gear, 110T Ring Gear Type)	1	02-Up	173584A	N.L.
214B	Planet, Rear (5 Gear, Steel) (61T Sun Gear, 99T Ring Gear Type)	1	02-Up	173584C	N.L.

ILL.		Qty.	Year	Part #	Ref. #
SUN GEARS					
128A	Sun Gear Drum, Front w/ 3rd Clu Sprag Assy (50T S.G., Bearing Type)	1	02-Up	173612A	N.L.
128A	Sun Gear Drum, Front w/ 3rd Clu Sprag Assy (50T S.G., Bushing Type)	1	02-Up	173612	N.L.
128A	Sun Gear Drum, Front w/ 3rd Clu Sprag Assy (53T Sun Gear)	1	02-Up	173612C	N.L.
128A	Sun Gear Drum, Front w/ 3rd Clu Sprag Assy (54T Sun Gear)	1	02-Up	173612B	N.L.
220B	Sun Gear, Center (42T, 9.200" Long)	1	02-Up	173610	N.L.
220B	Sun Gear, Center (42T, 9.500" Long)	1	02-Up	173610A	N.L.
220B	Sun Gear, Center (43T, 9.500" Long)	1	02-Up	173610B	N.L.
228B	Sun Gear, Rear w/ High Clutch Sprag Assembly (61T Sun Gear)	1	02-Up	173614A	N.L.
228B	Sun Gear, Rear w/ High Clutch Sprag Assembly (62T Sun Gear)	1	02-Up	173614	N.L.
SHELLS & SUPPORTS					
338C	Support, Rear (2.540" Tall Center Hub)	1	02-Up	173632	N.L.
338C	Support, Rear (3.250" Tall Center Hub)	1	02-Up	173632A	N.L.
ONE WAY CLUTCHES					
126A	Sprag Assembly, 3rd (26 Element)	1	02-Up	173656	N.L.
126A	Sprag Assembly, 3rd (28 Element)	1	02-Up	173656A	N.L.
230B	Sprag, Forward (26 Element)	1	02-Up	173658	N.L.
230B	Sprag, Forward (28 Element)	1	02-Up	173658A	N.L.
346C	Sprag, 1st (28 Element) (.560" thick)	1	02-Up	173654	N.L.
346C	Sprag, 1st (28 Element) (.840" thick)	1	02-Up	173654A	N.L.
SHAFTS					
446D	Output (2wd) (19.900") (5.500" From End to Ring Groove)	1	02-Up	173678AA	N.L.
446D	Output (2wd) (19.900") (6.200" From End to Ring Groove)	1	02-Up	173678	N.L.
446D	Output (4wd) (18.000")	1	02-Up	173678A	N.L.
446D	Output (4wd) (18.500")	1	02-Up	17378C	N.L.
446D	Output (4wd) (19.900")	1	02-Up	173678AA	N.L.
VALVE BODIES & GOVERNORS					
558E	Low OHM Solenoid (10-15) (Non TCM)	1	02-05	173740-1	N.L.
558E	Low OHM Solenoid (10-15) (TCM Not Included)	1	02-05	173740-3	N.L.
558E	High OHM Solenoid (20-40) (Non TCM)	1	02-05	173740-2	N.L.
558E	High OHM Solenoid (20-40) (Early TCM Not Included)	1	02-05	173740-4	N.L.
558E	High OHM Solenoid (20-40) (Late TCM Not Included)	1	06-Up	173740-5	N.L.
CASES/HOUSINGS & COMPONENTS					
432D	Case (2wd) (Cast MCO)	1	02-Up	173760	N.L.
432D	Case (4wd) (Cast LK)	1	02-Up	173760D	N.L.
432D	Case (4wd) (Cast MCO)	1	02-Up	173760C	N.L.
432D	Case (Cast RXO 2W #5)	1	02-Up	173760B	N.L.
432D	Case (Cast RXO 4W #1)	1	02-Up	173760A	N.L.
502E	Extension Housing (6.875" Long) (Cast GKC-T #1)	1	02-Up	173770A	N.L.
502E	Extension Housing (7.750" Long) (Cast 97X06)	1	02-Up	173770	N.L.
524E	Pan, Bottom (2wd & 4wd)	1	02-Up	173765	N.L.
MISCELLANEOUS COMPONENTS					
440D	Park Gear (20 Lug)	1	02-Up	173690	N.L.
SERVOS AND ACCUMULATORS					
512E	Servo Assembly (Cast 31695)	1	02-Up	173900	N.L.
TECHNICAL MANUALS					
N.I.	Tech Manual (ATSG)	1	02-Up	173400	N.L
N.I.	Diagnostic Guide (Nissan, Infinity) (ATSG)	1	02-Up	173400T	N.L

Notes

ILL.		Qty.	Year	Part #	Ref. #
MASTER OVERHAUL KITS (WITH STEELS)					
N.I.	JF405E w/ Bonded Clutch Piston	1	03-Up	83006J	N.L.
MASTER OVERHAUL KITS (LESS STEELS)					
N.I.	JF405E w/ Bonded Clutch Piston	1	03-Up	83004J	N.L.
OVERHAUL KITS (WITH RINGS AND SEALS)					
N.I.	JF405E	1	03-Up	83002J	N.L.
BONDED PISTONS					
N.I.	Retainer, Low Clutch Balance (Bonded)	1	03-Up	83984J	45432-02700
N.I.	Retainer, High Clutch Balance (Bonded)	1	03-Up	83985J	N.L.
GASKETS & O-RINGS					
N.I.	Pan Gasket	1	03-Up	83300J	N.L.
METAL CLAD SEALS					
N.I.	Pump	1	03-Up	83070J	N.L.
N.I.	Axle, Right	1	03-Up	83076J	N.L.
N.I.	Axle, Left	1	03-Up	83077J	N.L.
FRICTION PLATES					
N.I.	Low	7	03-Up	83104J	N.L.
N.I.	Reverse	3	03-Up	83106J	N.L.
N.I.	High	2	03-Up	83108J	N.L.
N.I.	Low/ Reverse	5 7	03-Up	83114J	N.L.
STEEL PLATES					
N.I.	Low	7	03-Up	83124J	N.L.
N.I.	Reverse	3	03-Up	83126J	N.L.
N.I.	High	2	03-Up	83128J	N.L.
N.I.	Low/ Reverse	5 7	03-Up	83134J	N.L.
PRESSURE PLATES					
N.I.	Low	1	03-Up	83144J	N.L.
N.I.	Reverse	1	03-Up	83146J	N.L.
N.I.	High	1	03-Up	83148J	N.L.
N.I.	Low/ Reverse	1	03-Up	83154J	N.L.
FILTERS					
N.I.	JF405E	1		83010J	45611-02700
FILTER KITS					
N.I.	JF405E	1	03-Up	83011J	N.L.
BANDS					
N.I.	2-4 Band	1	03-Up	83022J	45460-02700
BUSHINGS					
N.I.	Bushing Kit	1	03-Up	83030J	N.L.
ELECTRICAL COMPONENTS					
N.I.	Switch, MLPS	1	03-Up	83410J	N.L.
N.I.	Sensor, OSS	1	03-Up	83436J	N.L.
N.I.	Solenoid (Green Connector)	1	03-Up	83421JA	N.L.
N.I.	Solenoid (White Connector)	1	03-Up	83421JB	N.L.
N.I.	Solenoid (Black Connector)	1	03-Up	83421JC	N.L.
N.I.	Solenoid (Brown Connector)	1	03-Up	83421JD	N.L.
N.I.	Harness w/ Connectors	1	03-Up	83446J	N.L.
PUMPS					
N.I.	Pump	1	03-Up	83500J	N.L.
N.I.	Pump Body	1	03-Up	83510J	N.L.
PUMP COMPONENTS					
N.I.	Pump Cover	1	03-Up	83520J	N.L.
N.I.	Pump Gears	1	03-Up	83530J	N.L.

ILL.		Qty.	Year	Part #	Ref. #
DRUMS & COMPONENTS					
N.I.	Drum, Low	1	03-Up	83554J	N.L.
N.I.	Drum, High	1	03-Up	83555J	N.L.
N.I.	Drum, Reverse	1	03-Up	83556J	N.L.
N.I.	Hub, High	1	03-Up	83575J	N.L.
N.I.	Piston, Low Clutch	1	03-Up	83964J	N.L.
N.I.	Piston, High Clutch	1	03-Up	83965J	N.L.
N.I.	Piston, Reverse Clutch	1	03-Up	83966J	N.L.
N.I.	Piston, Low/ Reverse	1	03-Up	83967J	45432-02700
N.I.	Return Spring, Low Clutch	1	03-Up	83974J	N.L.
N.I.	Return Spring, High Clutch	1	03-Up	83975J	N.L.
N.I.	Return Spring, Reverse Clutch	1	03-Up	83976J	N.L.
N.I.	Return Spring, Low/ Reverse	1	03-Up	83977J	N.L.
N.I.	Retainer, Low Clutch Balance (Bonded)	1	03-Up	83984J	45432-02700
N.I.	Retainer, High Clutch Balance (Bonded)	1	03-Up	83985J	N.L.
PLANETS & COMPONENTS					
N.I.	Planet, Front	1	03-Up	83582J	N.L.
N.I.	Planet, Rear	1	03-Up	83584J	N.L.
N.I.	Ring Gear	1	03-Up	83594J	N.L.
SUN GEARS					
N.I.	Sun Gear, Rear	1	03-Up	83614J	N.L.
N.I.	Sun Gear, Front w/ Flange	1	03-Up	83622J	N.L.
ONE WAY CLUTCHES					
N.I.	Roller Clutch, Low	1	03-Up	83654J	N.L.
SHAFTS					
N.I.	Shaft, Input	1	03-Up	83670J	N.L.
VALVE BODIES & GOVERNORS					
N.I.	Valve Body	1	03-Up	83740J	N.L.
DIFFERENTIALS					
N.I.	Differential	1	03-Up	83715J	N.L.
CASES/HOUSINGS & COMPONENTS					
N.I.	Bell Housing	1	03-Up	83750J	N.L.
N.I.	End Cover	1	03-Up	83759J	N.L.
N.I.	Case	1	03-Up	83760J	N.L.
N.I.	Pan	1	03-Up	83765J	N.L.
MISCELLANEOUS COMPONENTS					
N.I.	Output Gear	1	03-Up	83710J	N.L.
N.I.	Transfer Gear	1	03-Up	83712J	N.L.
N.I.	Cooler	1	03-Up	83998J	N.L.
SERVOS AND ACCUMULATORS					
N.I.	Servo	1	03-Up	83902J	N.L.
N.I.	Servo Cover	1	03-Up	83904J	N.L.

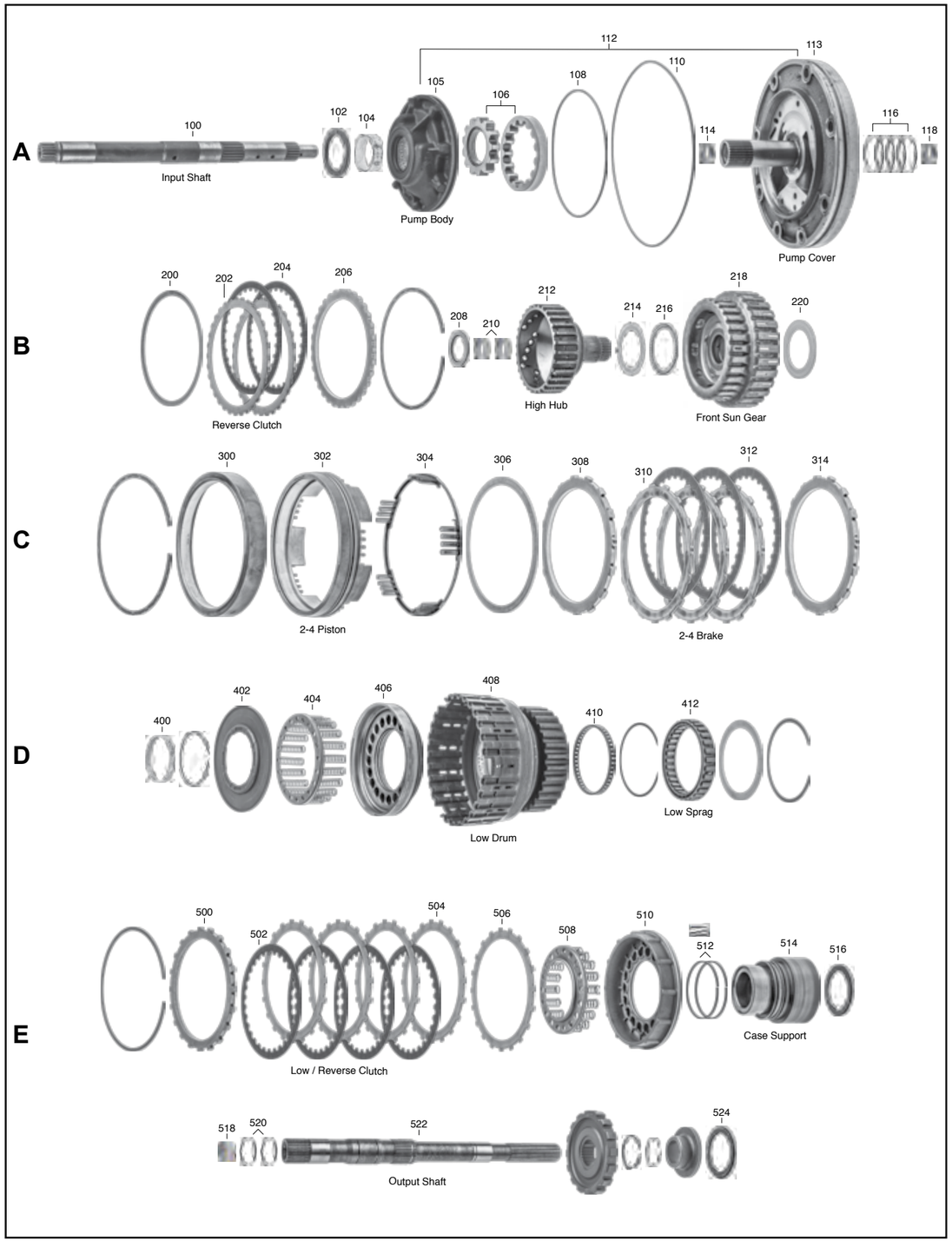
A
100
Input Shaft
102
104
105
Pump Body
106
108
110
112
113
114
Pump Cover
116
118
B
200
202
204
206
Reverse Clutch
208
210
212
High Hub
214
216
218
Front Sun Gear
220
C
300
302
2-4 Piston
304
306
308
310
312
2-4 Brake
314
D
400
402
404
406
408
Low Drum
410
412
Low Sprag
E
500
502
Low / Reverse Clutch
504
506
508
510
512
Case Support
514
516
518
520
522
Output Shaft
524

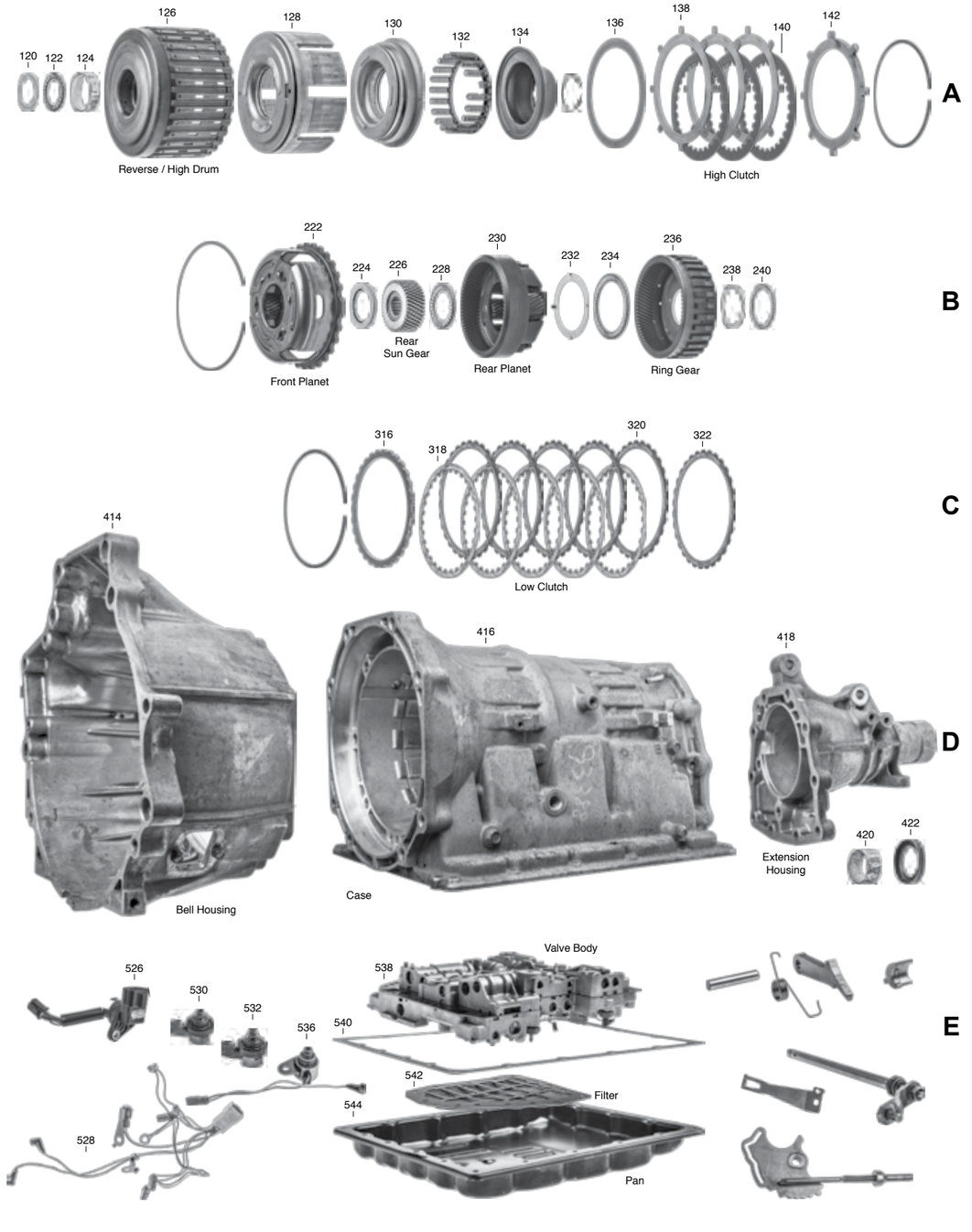
A
120
122
124
126
Reverse / High Drum
128
130
132
134
136
138
High Clutch
140
142
B
222
Front Planet
224
226
Rear
Sun Gear
228
230
Rear Planet
232
234
236
Ring Gear
238
240
C
316
318
320
322
Low Clutch
414
D
416
Case
418
Extension
Housing
420
422
Bell Housing
E
526
530
532
536
528
538
Valve Body
540
542
Filter
544
Pan

ILL.		Qty.	Year	Part #	Ref. #
MASTER OVERHAUL KITS (WITH STEELS)					
N.I.	JR405E (Nissan)	1	00-Up	193006	N.L.
N.I.	RC4A-EL (Mazda)	1	00-Up	193006B	N.L.
MASTER OVERHAUL KITS (LESS STEELS)					
N.I.	JR405E (Nissan)	1	00-Up	193004	N.L.
N.I.	RC4A-EL (Mazda)	1	00-Up	193004B	N.L.
OVERHAUL KITS (WITH RINGS AND SEALS)					
N.I.	JR405E, RC4A-EL	1	00-Up	193002	N.L.
BONDED PISTONS					
134A	Retainer, Reverse/High Clutch (Bonded)	1	00-Up	193985	N.L.
402D	Retainer, Low Clutch (Bonded)	1	00-Up	193984	N.L.
GASKETS & O-RINGS					
108A	Pump O Ring	1	00-Up	193311	N.L.
110A	Pump Cover O Ring	1	00-Up	193312	N.L.
540E	Pan Gasket (Nissan)	1	00-Up	193300	N.L.
540E	Pan Gasket (Mazda)	1	00-Up	193300B	N.L.
METAL CLAD SEALS					
102A	Pump	1	00-Up	193070	N.L.
422D	Ext Housing 2WD (Nissan)	1	00-Up	193074	N.L.
422D	Ext Housing 2WD (Mazda)	1	00-Up	53074C	N.L.
422D	Adapt 4WD	1	00-Up	193074D	N.L.
N.I.	Manual Lever	1	00-Up	193072	N.L.
SEALING RINGS & KITS					
N.I.	Ring Kit	1	00-Up	193175K	N.L.
116A	Pump Cover	4	00-Up	193178	N.L.
512E	Low Drum Support	2	00-Up	193188	N.L.
520E	Output Shaft	2	00-Up	193180	N.L.
FRICTION PLATES					
140A	High	4-6	00-Up	193106	N.L.
204B	Reverse	2	00-Up	193110	N.L.
312C	2-4 Brake	4-6	00-Up	23104	N.L.
318C	Low Clutch	5-7	00-Up	23108	N.L.
502E	Low/Reverse Brake	4	00-Up	23114A	N.L.
STEEL PLATES					
138A	High (.079)	4-6	00-Up	193126	N.L.
138A	High (.114)	4-6	00-Up	193126A	N.L.
202B	Reverse	2	00-Up	193130	N.L.
310C	2-4 Brake (Nissan) (.142)	3	00-Up	193124	N.L.
310C	2-4 Brake (Mazda) (.071)	5	00-Up	193124A	N.L.
320C	Low Clutch (Nissan) (.055)	7	00-Up	193128A	N.L.
320C	Low Clutch (Mazda) (.079)	5	00-Up	193128	N.L.
504E	Low/Reverse Brake	4	00-Up	193134	N.L.
PRESSURE PLATES					
142A	High	1	00-Up	193146	N.L.
206B	Reverse	1	00-Up	193150	N.L.
308C	2-4 Brake Apply	1	00-Up	193145	N.L.
314C	2-4 Brake Backing	1	00-Up	193144	N.L.
316C	Low Clutch	1	00-Up	193148	N.L.
500E	Low/Reverse Brake Backing	1	00-Up	193154	N.L.
506E	Low/Reverse Brake Apply	1	00-Up	193155	N.L.
FILTERS					
542E	Main	1	00-Up	193010	N.L.
FILTER KITS					
N.I	Filter Kit (Nissan)	1	00-Up	193011	N.L.
N.I	Filter kit (Mazda)	1	00-Up	193011B	N.L.

ILL.		Qty.	Year	Part #	Ref. #
BUSHINGS					
104A	Pump Body	1	00-Up	193034	N.L.
114A	Stator (Front)	1	00-Up	193036	N.L.
118A	Stator (Rear)	1	00-Up	193037	N.L.
124A	Drum (Rev/High)	1	00-Up	193046	N.L.
210B	High Hub	2	00-Up	193054	N.L.
400D	Low Clutch Drum	1	00-Up	193048	N.L.
420D	Ext. Housing 2WD	1	00-Up	193066	N.L.
518E	Output Shaft	1	00-Up	193062	N.L.
THRUST WASHERS/BEARINGS					
BEARINGS					
120A	Race, Pump Cover	1	00-Up	193210	N.L.
122A	Bearing, Pump Cover	1	00-Up	193209	N.L.
208B	Bearing, Reverse/High Drum	1	00-Up	193213	N.L.
214B	Race, Front Sun Gear	1	00-Up	193240	N.L.
218B	Bearing, Front Sun Gear	1	00-Up	193241	N.L.
220B	Race, Front Planet	1	00-Up	193237	N.L.
220B	Bearing, Front Planet	1	00-Up	193238	N.L.
224B	Bearing, Rear Sun Gear	1	00-Up	193247	N.L.
228B	Bearing, Rear Planet	1	00-Up	193251	N.L.
232B	Race, Rear Ring Gear	1	00-Up	193236	N.L.
234B	Bearing, Rear Ring Gear	1	00-Up	193235	N.L.
238B	Race, Low Drum Support	1	00-Up	193231	N.L.
240B	Bearing, Low Drum Support	1	00-Up	193232	N.L.
410D	Bearing, Low Clutch Drum (Caged)	1	00-Up	193296	N.L.
516E	Bearing, Case	1	00-Up	193263	N.L.
524E	Bearing, Extension Housing	1	00-Up	193263	N.L.
N.I	Bearing, Low Drum Support (Caged)	1	00-Up	193295	N.L.
N.I	Output Shaft Spacer	1	00-Up	193205	N.L.
ELECTRICAL COMPONENTS					
526E	Harness, w/connector	1	00-Up	193444	N.L.
528E	Harness, Internal	1	00-Up	193436	N.L.
530E	Solenoid, Brown Connector	4	00-Up	193421	N.L.
532E	Solenoid, Gray Connector	1	00-Up	193422	N.L.
536E	Solenoid w/wires	1	00-Up	193423	N.L.
N.I	Sensor, ISS	1	00-Up	193438	N.L.
N.I	Sensor, OSS	1	00-Up	193436	N.L.
N.I	Switch, MLPS	1	00-Up	193410	N.L.
N.I	Switch, Pressure	3	00-Up	193411	N.L.
PUMPS					
112A	Pump	1	00-Up	193500	N.L.
PUMP COMPONENTS					
106A	Pump Gears	1	00-Up	193530	N.L.
113A	Pump Cover	1	00-Up	193520	N.L.
DRUMS & COMPONENTS					
126A	Drum, Reverse/High Clutch	1	00-Up	193556	N.L.
128A	Piston, Reverse Clutch	1	00-Up	193965	N.L.
130A	Piston, High Clutch	1	00-Up	193966	N.L.
132A	Return Spring, Reverse/High Clutch	1	00-Up	193976	N.L.
134A	Retainer, Reverse/High Clutch (Bonded)	1	00-Up	193985	N.L.
136A	Cushion, High Clutch	1	00-Up	193852	N.L.
200B	Cushion, Reverse Clutch	1	00-Up	193854	N.L.
212B	Hub, High Clutch	1	00-Up	193575	N.L.
302C	Piston, 2-4 Brake	1	00-Up	193962	N.L.
304C	Return Spring, 2-4 Brake	1	00-Up	193972	N.L.
306C	Cushion, 2-4 Brake	1	00-Up	193851	N.L.
322C	Cushion, Low Clutch	1	00-Up	193853	N.L.
402D	Retainer, Low Clutch (Bonded)	1	00-Up	193984	N.L.
404D	Return Spring, Low Clutch	1	00-Up	193974	N.L.
406D	Piston, Low Clutch	1	00-Up	193964	N.L.
408D	Drum, Low Clutch	1	00-Up	193554	N.L.

ILL.		Qty.	Year	Part #	Ref. #
DRUMS & COMPONENTS (Cont.)					
506E	Cushion, Low/Reverse Brake	1	00-Up	193857	N.L.
508E	Return Spring, Low/Reverse Brake	1	00-Up	193977	N.L.
510E	Piston, Low/Reverse Brake	1	00-Up	193967	N.L.
PLANETS AND COMPONENTS					
222B	Front	1	00-Up	193582	N.L.
230B	Rear	1	00-Up	193584	N.L.
236B	Rear Ring Gear	1	00-Up	193594	N.L.
SUN GEARS					
218B	Front with Shell	1	00-Up	193622	N.L.
226B	Rear	1	00-Up	193614	N.L.
ONE WAY CLUTCHES					
412D	Low Sprag	1	00-Up	193658	N.L.
SHELLS & SUPPORTS					
300C	Support, 2-4 Piston	1	00-Up	193956	N.L.
514E	Support, Low Clutch Drum	1	00-Up	193668	N.L.
SHAFTS					
100A	Input	1	00-Up	193670	N.L.
522E	Output (2WD)	1	00-Up	193678	N.L.
522E	Output (4WD)	1	00-Up	193678D	N.L.
VALVE BODIES & GOVERNORS					
538E	Valve Body	1	00-Up	193740	N.L.
CASES/HOUSINGS & COMPONENTS					
416D	Case	1	00-Up	193760	N.L.
414D	Bell Housing	1	00-Up	193750	N.L.
418D	Extension Housing (2WD)	1	00-Up	193770	N.L.
418D	Extension Housing (4WD)	1	00-Up	193770D	N.L.
544E	Pan, Bottom	1	00-Up	193765	N.L.
MISCELLANEOUS COMPONENTS					
N.I	Park Gear	1	00-Up	193690	N.L.

Notes

Notes

A

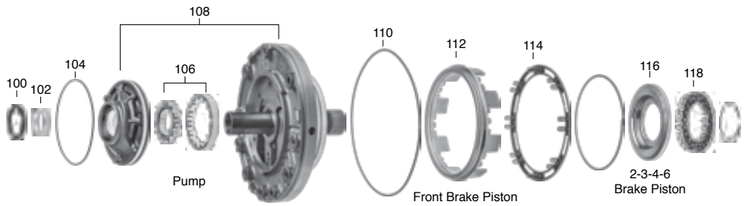

B

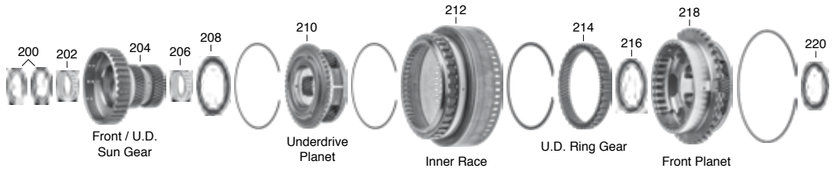

C

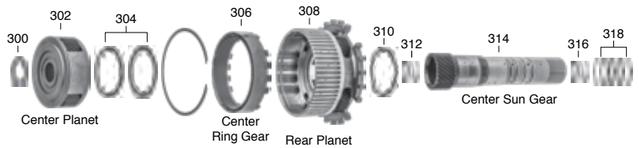

D

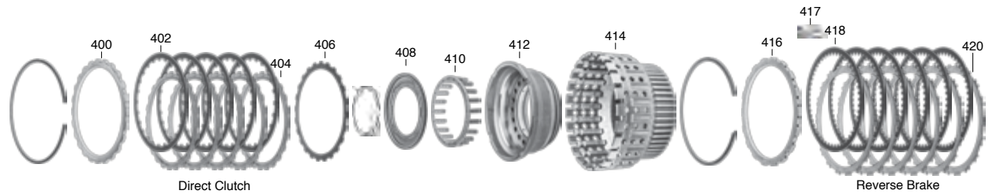

E

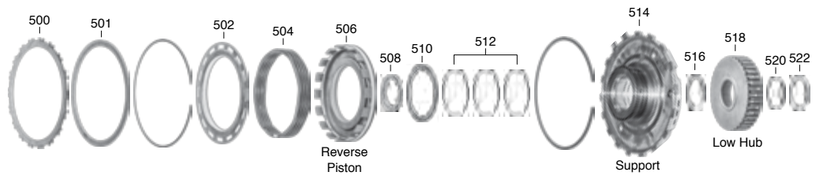

F

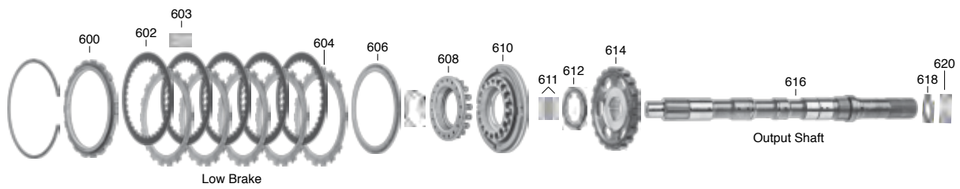

A

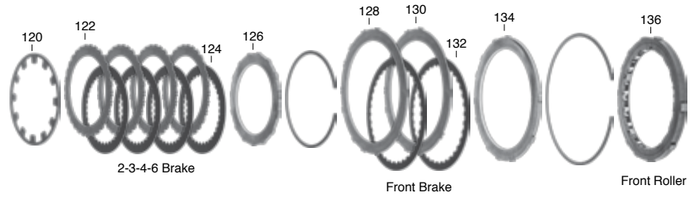

B

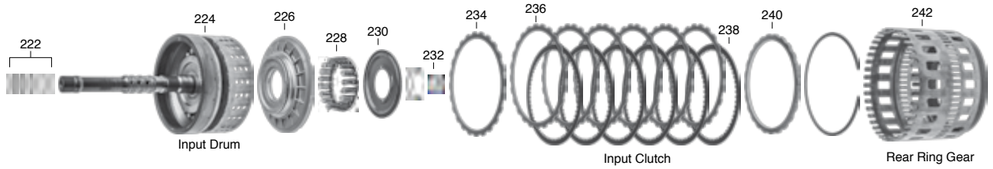

C

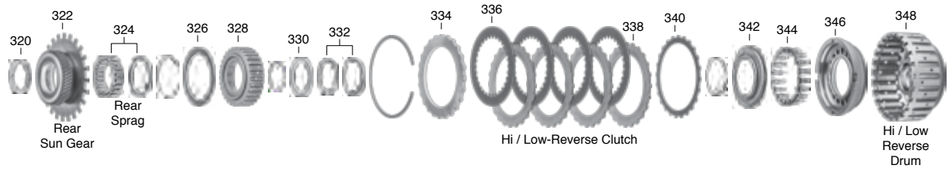

D

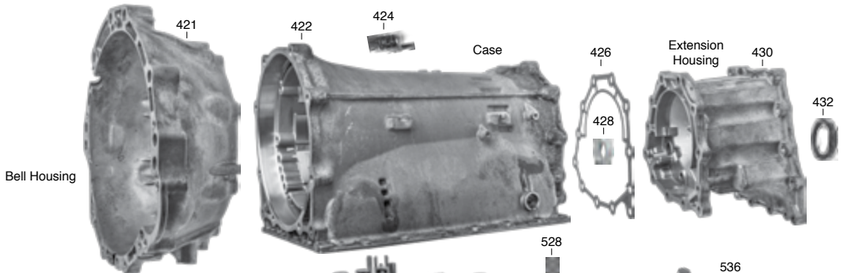

E

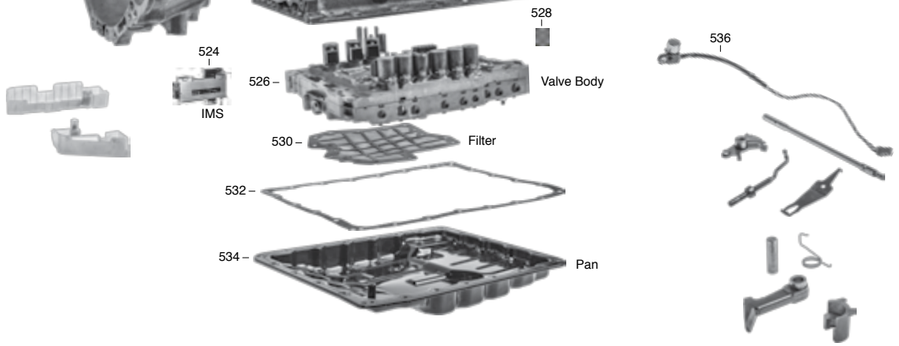

ILL.		Qty.	Year	Part #	Ref. #
MASTER OVERHAUL KITS (WITH STEELS)					
N.I.	JR710E	1	09-Up	283006	N.L.
MASTER OVERHAUL KITS (LESS STEELS)					
N.I.	JR710E	1	09-Up	283004	N.L.
OVERHAUL KITS (WITH RINGS AND SEALS)					
N.I.	JR710E	1	09-Up	283002	N.L.
BONDED PISTONS					
N.I.	Piston Kit	1	09-Up	283960K	N.L.
230B	Retainer, Input Clutch (Bonded)	1	09-Up	283984	N.L.
342C	Retainer, Hi/Low Reverse (Bonded)	1	09-Up	283987	N.L.
408D	Retainer, Direct (Bonded)	1	09-Up	283985	N.L.
GASKETS & O-RINGS					
104A	O-Ring, Pump	1	09-Up	283311	N.L.
110A	O-Ring, Pump Cover	1	09-Up	283312	N.L.
426D	Gasket, Extension Housing	1	09-Up	283305	N.L.
532E	Gasket, Pan	1	09-Up	283300	N.L.
METAL CLAD SEALS					
100A	Pump	1	09-Up	173070	N.L.
432D	AWD Adapter	1	09-Up	283074	N.L.
528E	Manual	2	09-Up	283072	N.L.
SEALING RINGS & KITS					
N.I.	Ring Kit	1	09-Up	283175K	N.L.
222B	Input	5	09-Up	283177	N.L.
318C	Center Sun Gear	4	09-Up	283182	N.L.
512E	Center Support	3	09-Up	283183	N.L.
611F	Output Shaft	2	09-Up	283180	N.L.
FRICTION PLATES					
124A	2-3-4-6 Brake	4	09-Up	283102	N.L.
132A	Front Brake	2	09-Up	283104	N.L.
238B	Input Clutch (60T)	6	09-Up	173100	N.L.
238B	Input Clutch (40T)	6	09-Up	283100	N.L.
336C	Hi/Low Reverse	4	09-Up	173114	N.L.
402D	Direct	5	09-Up	173106	N.L.
418D	Reverse (40T)	7	09-Up	173110A	N.L.
418D	Reverse (50T)	6	09-Up	173110	N.L.
602F	Low	5	09-Up	283108	N.L.
STEEL PLATES					
122A	2-3-4-6 Brake	4	09-Up	283122	N.L.
128A	Front Brake	2	09-Up	283124	N.L.
236B	Input Clutch	6	09-Up	283120	N.L.
338C	Hi/Low Reverse	4	09-Up	173134	N.L.
404D	Direct	5	09-Up	173126	N.L.
420D	Reverse (.079)	6	09-Up	173130	N.L.
420D	Reverse (.063)	7	09-Up	283130	N.L.
604F	Low	5	09-Up	173128	N.L.
PRESSURE PLATES					
126A	2-3-4-6 Brake	1	09-Up	283142	N.L.
134A	Front Brake	1	09-Up	283144	N.L.
240B	Input Clutch	1	09-Up	283140	N.L.
334C	Hi/Low Reverse	1	09-Up	173154	N.L.
400D	Direct	1	09-Up	173156	N.L.
416D	Reverse	1	09-Up	173150	N.L.
600F	Low	1	09-Up	173158	N.L.
FILTERS					
530E	Main	1	09-Up	283010	N.L.

ILL.		Qty.	Year	Part #	Ref. #
FILTER KITS					
N.I.	Main	1	09-Up	283011	N.L.
BUSHINGS					
102A	Pump Body	1	09-Up	173034	N.L.
202B	Underdrive Sun Gear	2	09-Up	283040	N.L.
232B	Input Drum	1	09-Up	283048	N.L.
312C	Center Sun Gear (Front)	1	09-Up	283052	N.L.
316C	Center Sun Gear (Rear)	1	09-Up	283053	N.L.
320C	Rear Sun Gear	1	09-Up	283055	N.L.
428D	Case	1	09-Up	283064	N.L.
N.I.	Extension Housing (2WD)	1	09-Up	283066	N.L.
THRUST WASHERS/BEARINGS					
WASHERS					
516E	Center Support (Rear)	1	09-Up	283260	N.L.
520E	Low Clutch Hub (Rear)	1	09-Up	283235	N.L.
BEARINGS					
200B	Race, Underdrive Sun Gear	1	09-Up	283241	N.L.
200B	Bearing, Underdrive Sun Gear	1	09-Up	283241	N.L.
208B	Bearing, Underdrive Planet	1	09-Up	283240	N.L.
216B	Bearing, Front Planet	1	09-Up	283238	N.L.
220B	Bearing Input Drum	1	09-Up	283243	N.L.
300C	Bearing, Center Planet	1	09-Up	283245	N.L.
304C	Bearing, Rear Planet	1	09-Up	283251	N.L.
304C	Race, Rear Planet	1	09-Up	283251	N.L.
310C	Bearing, Rear Sun Gear	1	09-Up	283247	N.L.
326C	Bearing, Hi/Low Reverse Hub	1	09-Up	283252	N.L.
330C	Race, Hi/Low Reverse Drum (Thick)	1	09-Up	283220	N.L.
332C	Bearing, Hi/Low Reverse Drum (Thick)	1	09-Up	283220	N.L.
332C	Race, Hi/Low Reverse Drum (Cupped)	1	09-Up	283220	N.L.
508E	Bearing, Center Support (Small)	1	09-Up	283225	N.L.
510E	Bearing, Center Support (Large)	1	09-Up	283226	N.L.
522E	Race, Low Clutch Hub/Case	1	09-Up	283236	N.L.
612F	Bearing, Park Gear/Case	1	09-Up	283263	N.L.
618F	Bearing, Output Shaft/Extension Housing	1	09-Up	283268	N.L.
620F	Race, Output Shaft/Extension Housing	1	09-Up	283268	N.L.
N.I.	Bearing, Pump Cover (Caged)	1	09-Up	283256	N.L.
ELECTRICAL COMPONENTS					
424D	Harness, Case Connector	1	09-Up	283444	N.L.
524E	Switch, Internal Mode	1	09-Up	283410	N.L.
536E	Sensor, Output Shaft	1	09-Up	283436	N.L.
N.I.	Solenoid, Code 11520 - 3- M	5	09-Up	283421	N.L.
N.I.	Solenoid, Code 11520-2-M	3	09-Up	283422	N.L.
N.I.	Solenoid, Code G7T23082	1	09-Up	283425	N.L.
PUMPS					
108A	Pump	1	09-Up	283500	N.L.
PUMP COMPONENTS					
106A	Pump Gears	1	09-Up	283530	N.L.
N.I.	Pump Body	1	09-Up	283510	N.L.
N.I.	Pump Cover	1	09-Up	283520	N.L.
DRUMS & COMPONENTS					
112A	Piston, Front Brake	1	09-Up	283963	N.L.
114A	Return Spring, Front Brake	1	09-Up	283973	N.L.
116A	Piston, 2-3-4-6 Brake	1	09-Up	283961	N.L.
118A	Return Spring, 2-3-4-6 Brake	1	09-Up	283971	N.L.
120A	Cushion, 2-3-4-6 Brake	1	09-Up	283125	N.L.
224B	Drum, Input w/Ring Gear	1	09-Up	283554	N.L.
226B	Piston, Input Clutch	1	09-Up	283964	N.L.
228B	Return Spring, Input Clutch	1	09-Up	283974	N.L.
230B	Retainer, Input Clutch (Bonded)	1	09-Up	283984	N.L.

ILL.		Qty.	Year	Part #	Ref. #
DRUMS & COMPONENTS (Cont.)					
234B	Cushion, Input Clutch	1	09-Up	283121	N.L.
328C	Hub, Hi/Low Reverse	1	09-Up	283577	N.L.
340C	Cushion, Hi/Low Reverse	1	09-Up	283135	N.L.
342C	Retainer, Hi/Low Reverse (Bonded)	1	09-Up	283987	N.L.
344C	Return Spring, Hi/Low Reverse	1	09-Up	283977	N.L.
346C	Piston, Hi/Low Reverse	1	09-Up	283967	N.L.
348C	Drum, Hi/Low Reverse	1	09-Up	283557	N.L.
406D	Cushion, Direct	1	09-Up	283127	N.L.
408D	Retainer, Direct (Bonded)	1	09-Up	283985	N.L.
410D	Return Spring, Direct	1	09-Up	283975	N.L.
412D	Piston, Direct	1	09-Up	283965	N.L.
414D	Drum, Direct	1	09-Up	283555	N.L.
500E	Cushion, Reverse (w/tangs)	1	09-Up	283131B	N.L.
501E	Cushion, Reverse	1	09-Up	283131	N.L.
502E	Retainer, Reverse	1	09-Up	283986	N.L.
504E	Return Spring, Reverse	1	09-Up	283976	N.L.
506E	Piston, Reverse	1	09-Up	283966	N.L.
518E	Hub, Low Clutch	1	09-Up	283579	N.L.
606F	Cushion, Low	1	09-Up	283129	N.L.
608F	Return Spring, Low Clutch	1	09-Up	283979	N.L.
610F	Piston, Low Clutch	1	09-Up	283962	N.L.
PLANETS AND COMPONENTS					
210B	Planet, Underdrive	1	09-Up	283586	N.L.
214B	Ring Gear, Underdrive	1	09-Up	283596	N.L.
218B	Planet, Front	1	09-Up	283582	N.L.
242B	Ring Gear, Rear	1	09-Up	283594	N.L.
302C	Planet, Center	1	09-Up	283580	N.L.
306C	Ring Gear, Center	1	09-Up	283592	N.L.
308C	Planet, Rear	1	09-Up	283584	N.L.
SUN GEARS					
204B	Underdrive	1	09-Up	283616	N.L.
314C	Center	1	09-Up	283612	N.L.
322C	Rear	1	09-Up	283614	N.L.
ONE WAY CLUTCHES					
136A	Roller, Front	1	09-Up	283652	N.L.
212B	Roller, Front Inner Race w/Shell	1	09-Up	283662	N.L.
324C	Sprag, Rear	1	09-Up	283654	N.L.
SHELLS & SUPPORTS					
514E	Center Support	1	09-Up	283632	N.L.
SHAFTS					
616F	Output (AWD)	1	09-Up	283678	N.L.
616F	Output (2WD)	1	09-Up	283678B	N.L.
VALVE BODIES & GOVERNORS					
526E	Valve Body, w/o TCM	1	09-Up	283740	N.L.
CASES/HOUSINGS & COMPONENTS					
421D	Bell Housing	1	09-Up	283750	N.L.
422D	Case	1	09-Up	283760	N.L.
430D	Extension Housing (2WD)	1	09-Up	283770B	N.L.
430D	Extension Housing (AWD)	1	09-Up	283770	N.L.
534E	Pan, Bottom	1	09-Up	283765	N.L.
MISCELLANEOUS COMPONENTS					
417D	Anti Rattle Spring, Front Brake	1	09-Up	283639	N.L.
603F	Anti Rattle Spring, Reverse Brake	1	09-Up	283639B	N.L.
614F	Park Gear	1	09-Up	283690	N.L.

Notes

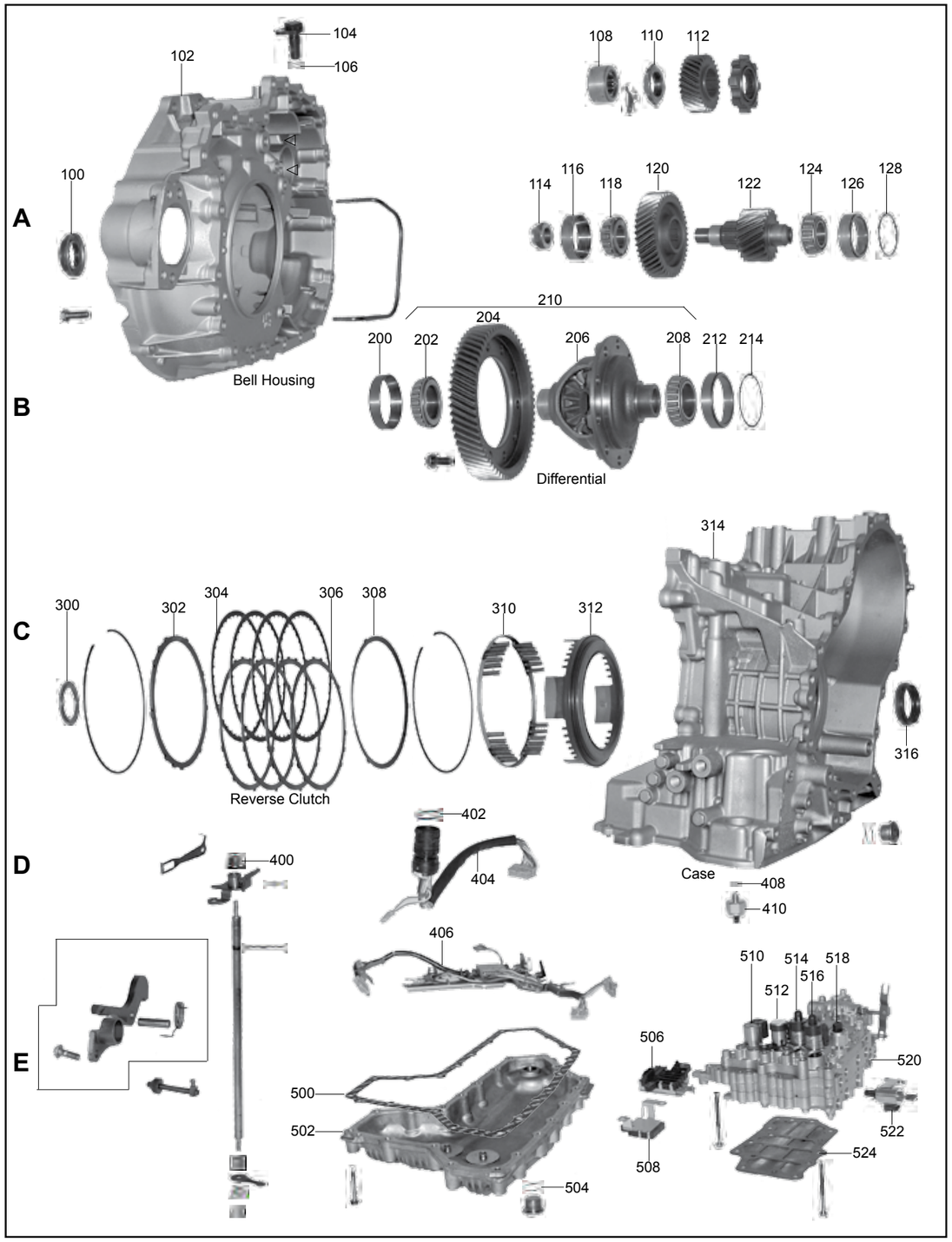
A
B
C
D
E
100
102
104
106
Bell Housing
108
110
112
114
116
118
120
122
124
126
128
200
202
204
206
208
210
212
214
Differential
300
302
304
306
308
310
312
Reverse Clutch
314
316
Case
400
402
404
406
408
410
500
502
504
506
508
510
512
514
516
518
520
522
524

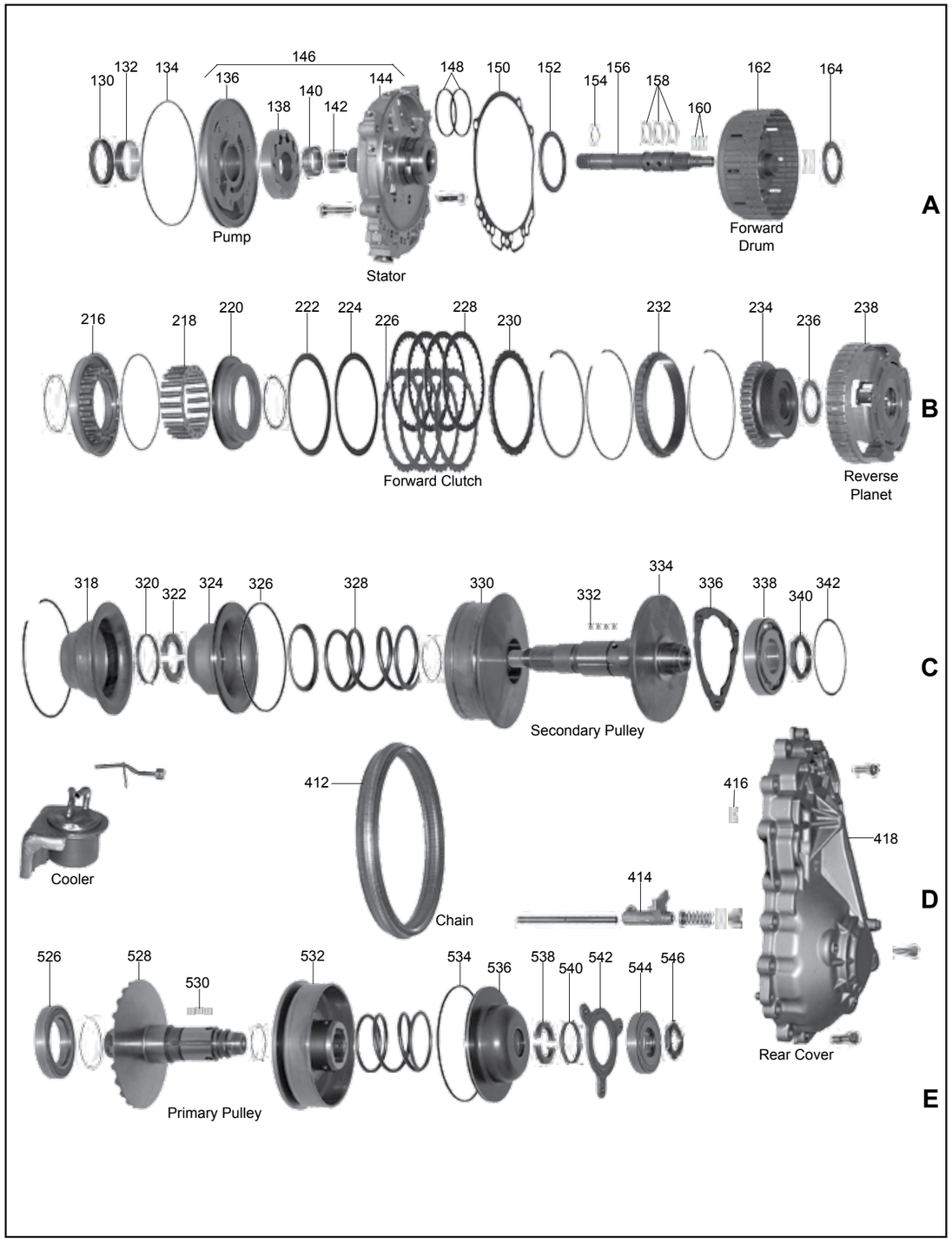
A
B
C
D
E
130
132
134
136
138
140
142
144
146
148
150
152
154
156
158
160
162
164
Pump
Stator
Forward Drum
216
218
220
222
224
226
228
230
232
234
236
238
Forward Clutch
Reverse Planet
318
320
322
324
326
328
330
332
334
336
338
340
342
Secondary Pulley
Cooler
412
Chain
414
416
418
Rear Cover
526
528
530
532
534
536
538
540
542
544
546
Primary Pulley

RE0F06A, RE0F08A, RE0F09A, RE0F10A

ILL.		Qty.	Year	Part #	Ref. #
MASTER OVERHAUL KITS (WITH STEELS)					
N.I.	RE0F06A	1	00-Up	203006H	N.L.
N.I.	RE0F08A	1	02-Up	203006K	N.L.
N.I.	RE0F09A, JF010E	1	03-Up	203006G	N.L.
N.I.	RE0F10A, JF011E	1	07-Up	203006N	N.L.
MASTER OVERHAUL KITS (LESS STEELS)					
N.I.	RE0F06A	1	00-Up	203004H	N.L.
N.I.	RE0F08A	1	02-Up	203004K	N.L.
N.I.	RE0F09A, JF010E	1	03-Up	203004G	N.L.
N.I.	RE0F10A, JF011E	1	07-Up	203004N	N.L.
OVERHAUL KITS (WITH RINGS AND SEALS)					
N.I.	RE0F06A	1	00-Up	203002H	N.L.
N.I.	RE0F08A	1	02-Up	203002K	N.L.
N.I.	RE0F09A, JF010E	1	03-Up	203002G	N.L.
N.I.	RE0F10A, JF011E	1	07-Up	203002N	N.L.
BONDED PISTONS					
N.I.	Piston Kit (RE0F09A)	1	03-Up	203960K	N.L.
N.I.	Piston Kit (RE0F10A)	1	07-Up	203960AK	N.L.
216B	Piston, Forward Clutch (Bonded) (F10A)	1	07-Up	203964N	N.L.
220B	Piston Retainer, Forward Clutch Balance (Bonded) (F09A)	1	03-Up	203984G	N.L.
220B	Piston Retainer, Forward Clutch Balance (Bonded) (F10A)	1	07-Up	203984N	N.L.
312C	Piston, Reverse Clutch (Bonded) (F06A)	1	00-Up	203966H	N.L.
312C	Piston, Reverse Clutch (Bonded) (F08A)	1	02-Up	203966K	N.L.
312C	Piston, Reverse Clutch (Bonded) (F09A)	1	03-Up	203966G	N.L.
312C	Piston, Reverse Clutch (Bonded) (F10A)	1	07-Up	203966N	N.L.
GASKETS & O-RINGS					
500E	Pan Gasket (F06A)	1	00-Up	203300H	N.L.
500E	Pan Gasket (F08A)	1	02-Up	203300K	N.L.
500E	Pan Gasket (F09A)	1	03-Up	203300G	N.L.
500E	Pan Gasket (F10A) (Chrysler, Mitsubishi)	1	07-Up	203300M	N.L.
500E	Pan Gasket (F10A) (Nissan)	1	07-Up	203300N	N.L.
METAL CLAD SEALS					
100A	Axle, Right (Bell) (Small I.D.) (F06A, F08A)	1	00-Up	203076H	N.L.
100A	Axle, Right (Bell) FWD (F09A)	1	03-Up	93076	N.L.
100A	Axle, Right (Bell) Awd (F09A)	1	03-Up	203076G	N.L.
100A	Axle, Right (Bell) Chrysler, Mitsubishi (F10A)	1	07-Up	183076	N.L.
100A	Axle, Right (Bell) Nissan (F10A)	1	07-Up	83076A	N.L.
130A	Pump (F06A, F08A)	1	00-Up	203070H	N.L.
130A	Pump (F09A)	1	03-Up	203070G	N.L.
130A	Pump (F10A)	1	07-Up	203070N	N.L.
316C	Axle, Left (Case) (Large I.D.) (F06A, F08A)	1	00-Up	203077H	N.L.
316C	Axle, Left (Case) (F09A)	1	03-Up	83077B	N.L.
316C	Axle, Left (Case) Chrysler, Mitsubishi (F10A)	1	07-Up	183076	N.L.
316C	Axle, Left (Case) Nissan (F10A)	1	07-Up	183076	N.L.
400D	Manual Lever (All)	1	03-Up	60072	N.L.
SEALING RINGS & KITS					
N.I.	Sealing Ring Kit (F09A)	1	03-Up	203175GK	N.L.
N.I.	Sealing Ring Kit (F10A)	1	07-Up	203175NK	N.L.
FRICTION PLATES					
228B	Forward (F06A)	4	00-Up	203108H	N.L.
228B	Forward (F08A)	3	02-Up	203108K	N.L.
228B	Forward (F09A)	4	03-Up	203108G	N.L.
228B	Forward (F10A)	3	07-Up	203108G	N.L.
304C	Reverse (F06A)	4	00-Up	203110H	N.L.
304C	Reverse (F08A)	3	02-Up	203110K	N.L.
304C	Reverse (F09A)	4	03-Up	203110G	N.L.
304C	Reverse (F10A)	3	07-Up	203110G	N.L.

RE0F06A, RE0F08A, RE0F09A, RE0F10A

ILL.		Qty.	Year	Part #	Ref. #
STEEL PLATES					
226B	Forward (F06A)	4	00-Up	203128H	N.L.
226B	Forward (F08A)	3	02-Up	203128K	N.L.
226B	Forward (F09A)	4	03-Up	203128G	N.L.
226B	Forward (F10A)	3	07-Up	203128G	N.L.
306C	Reverse (F06A)	4	00-Up	203130H	N.L.
306C	Reverse (F08A)	3	02-Up	203130K	N.L.
306C	Reverse (F09A)	4	03-Up	203130G	N.L.
306C	Reverse (F10A)	3	07-Up	203130N	N.L.
PRESSURE PLATES					
230B	Forward (F06A)	1	00-Up	203148H	N.L.
230B	Forward (F08A)	1	02-Up	203148K	N.L.
230B	Forward (F09A)	1	03-Up	203148G	N.L.
302C	Reverse (F06A)	1	00-Up	203150H	N.L.
302C	Reverse (F08A)	1	02-Up	203150K	N.L.
302C	Reverse (F09A)	1	03-Up	203150G	N.L.
302C	Reverse (F10A)	1	07-Up	203150N	N.L.
FILTERS					
524E	RE0F06A	1	00-Up	203010H	N.L.
524E	RE0F08A	1	02-Up	203010K	N.L.
524E	RE0F09A, JF010E	1	03-Up	203010G	N.L.
524E	RE0F10A, JF011E (Chrysler, Mitsubishi)	1	07-Up	203010M	N.L.
524E	RE0F10A (Nissan)	1	07-Up	203010N	N.L.
N.I.	Filter, Cooler Return (RE0F10A, JF011E)	1	07-Up	203013N	N.L.
FILTER KITS					
N.I.	RE0F06A	1	00-Up	203011H	N.L.
N.I.	RE0F08A	1	02-Up	203011K	N.L.
N.I.	RE0F09A, JF010E	1	03-Up	203011G	N.L.
N.I.	RE0F10A, JF011E (Chrysler, Mitsubishi)	1	07-Up	203011M	N.L.
N.I.	RE0F10A (Nissan)	1	07-Up	203011N	N.L.
BUSHINGS					
N.I.	Bushing Kit (F06A)	1	00-Up	203030H	N.L.
N.I.	Bushing Kit (F08A)	1	02-Up	203030K	N.L.
N.I.	Bushing Kit (F09A)	1	03-Up	203030G	N.L.
N.I.	Bushing Kit (F10A)	1	07-Up	203030N	N.L.
132A	Pump Body (F06A, F08A)	1	00-Up	203034H	N.L.
132A	Pump Body (F09A)	1	03-Up	203034G	N.L.
132A	Pump Body (F10A)	1	07-Up	203034N	N.L.
140A	Pump Drive Gear (F09A)	1	03-Up	203035G	N.L.
140A	Pump Drive Gear (F10A)	1	07-Up	203035N	N.L.
142A	Stator (F09A)	1	03-Up	203036G	N.L.
142A	Stator (F10A)	1	07-Up	203036N	N.L.
N.I.	Drive Pulley (RE0F09A)	1	03-Up	203065G	N.L.
N.I.	Drive Pulley (RE0F10A)	1	07-Up	203065N	N.L.
THRUST WASHERS/BEARINGS					
WASHERS					
152A	Washer, Stator (Front) (F10A)	1	07-Up	203211N	N.L.
N.I.	Washer, Pump Gear (Front) (F10A)	2	07-Up	203203N	N.L.
N.I.	Shim, Driven Pulley (F10A)	1	07-Up	203281N	N.L.
BEARINGS					
108A	Driven Pulley Bearing to Bell (F09A)	1	03-Up	203228G	N.L.
108A	Driven Pulley Bearing to Bell (F10A)	1	07-Up	203228N	N.L.
118A	Pinion Shaft Bearing & Race (F09A)	1	03-Up	203281GK	N.L.
118A	Pinion Shaft Bearing & Race (F10A)	1	07-Up	203281NK	N.L.
164A	Sun Gear (Front & Rear)	2	03-Up	203232G	N.L.
202B	Differential to Bell Bearing & Race (F09A)	1	03-Up	203291GK	N.L.
202B	Differential to Bell Bearing & Race (F10A)	1	07-Up	203291NK	N.L.
208B	Differential to Case Bearing & Race (F09A)	1	03-Up	203289GK	N.L.
208B	Differential to Case Bearing & Race (F10A)	1	07-Up	203289NK	N.L.
236B	Planet to Sun Gear (Same as Sun Gear)	1	03-Up	203232G	N.L.

ILL.		Qty.	Year	Part #	Ref. #
BEARINGS (Cont.)					
300C	Planet to Case (Same as Sun Gear)	1	03-Up	203232G	N.L.
338C	Driven Pulley Bearing to Rear Cover (F09A)	1	03-Up	203229G	N.L.
338C	Driven Pulley Bearing to Rear Cover (F10A)	1	07-Up	203229N	N.L.
526E	Drive Pulley Bearing to Case (F09A)	1	03-Up	203236G	N.L.
526E	Drive Pulley Bearing to Case (F10A)	1	07-Up	203236N	N.L.
544E	Drive Pulley Bearing to Rear Cover (F09A)	1	03-Up	203235G	N.L.
544E	Drive Pulley Bearing to Rear Cover (F10A)	1	07-Up	203235N	N.L.
N.I.	Pump Gear (F10A)	1	07-Up	203209N	N.L.
N.I.	Stator (F09A)	1	03-Up	203212G	N.L.
N.I.	Stator (F10A)	1	07-Up	203212N	N.L.
ELECTRICAL COMPONENTS					
104A	Sensor, OSS (F09A)	1	03-Up	203436G	N.L.
104A	Sensor, OSS (F10A)	1	07-Up	203436N	N.L.
404D	Harness, Case w/ Connector (F09A)	1	03-Up	203446GB	N.L.
404D	Harness, Case w/ Connector (F10A)	1	07-Up	203446NB	N.L.
406D	Harness, Solenoid (F09A)	1	03-Up	203446GC	N.L.
406D	Harness, Solenoid (F10A)	1	07-Up	203446NC	N.L.
506E	Switch, Neutral (F09A)	1	03-Up	203410G	N.L.
506E	Switch, Neutral (F10A)	1	07-Up	203410N	N.L.
N.I.	Switch, Pressure (Valve Body) (F09A)	1	03-Up	203417G	N.L.
N.I.	Switch, Pressure (Valve Body) (F10A)	1	07-Up	203417N	N.L.
N.I.	Switch, Pressure (Case) (F09A)	1	03-Up	203418G	N.L.
N.I.	Switch, Pressure (Case) (F10A)	1	07-Up	203418N	N.L.
N.I.	Solenoid, TCC (F09A)	1	03-Up	203425G	N.L.
N.I.	Solenoid, TCC (F10A)	1	07-Up	203425N	N.L.
N.I.	Solenoid, PWM (F09A)	2	03-Up	203431G	N.L.
N.I.	Solenoid, PWM (F10A)	2	07-Up	203431N	N.L.
N.I.	Solenoid, Ratio Control (F09A)	1	03-Up	203435G	N.L.
N.I.	Solenoid, Ratio Control (F10A)	1	07-Up	203435N	N.L.
N.I.	Sensor, ISS (F09A)	1	03-Up	203438G	N.L.
N.I.	Sensor, ISS (F10A)	1	07-Up	203438N	N.L.
N.I.	Harness, Internal (1 Piece Type) (F09A)	1	03-Up	203446G	N.L.
N.I.	Solenoid, Line Pressure (F09A)	1	03-Up	203428G	N.L.
N.I.	Solenoid, Line Pressure (F10A)	1	07-Up	203428N	N.L.
PUMPS					
136A	Pump Body (F09A)	1	03-Up	203510G	N.L.
146A	Pump Assembly (F09A)	1	03-Up	203500G	N.L.
N.I.	Pump Assembly (Remote) (F10A)	1	07-Up	203500N	N.L.
N.I.	Pump Body (Remote) (F10A)	1	07-Up	203510N	N.L.
PUMP COMPONENTS					
138A	Pump Gears (F09A)	1	03-Up	203530G	N.L.
144A	Pump Cover (F09A)	1	03-Up	203520G	N.L.
N.I.	Pump Cover (Remote) (F10A)	1	07-Up	203520N	N.L.
N.I.	Pump Rotor (F10A)	1	07-Up	203532N	N.L.
N.I.	Pump Vanes (F10A)	12	07-Up	203533N	N.L.
N.I.	Pump Slide (F10A)	1	07-Up	203534N	N.L.
N.I.	Pump End Plate (Rear) (F10A)	1	07-Up	203544N	N.L.
DRUMS & COMPONENTS					
162A	Drum, Forward (4 Clutch) (F09A)	1	03-Up	203554G	N.L.
162A	Drum, Forward (3 Clutch) (F10A)	1	07-Up	203554N	N.L.
216B	Piston, Forward Clutch (F09A)	1	03-Up	203964G	N.L.
216B	Piston, Forward Clutch (Bonded) (F10A)	1	07-Up	203964N	N.L.
218B	Return Spring, Forward (F09A)	1	03-Up	203974G	N.L.
218B	Return Spring, Forward (F10A)	1	07-Up	203974N	N.L.
220B	Piston Retainer, Forward Clutch Balance (Bonded) (F09A)	1	03-Up	203984G	N.L.
220B	Piston Retainer, Forward Clutch Balance (Bonded) (F10A)	1	07-Up	203984N	N.L.
222B	Cushion, Forward (F09A)	1	03-Up	203853G	N.L.
222B	Cushion, Forward (F10A)	1	07-Up	203853N	N.L.
308C	Cushion, Reverse (F09A)	1	03-Up	203854G	N.L.
308C	Cushion, Reverse (F10A)	1	07-Up	203854N	N.L.
310C	Return Spring, Reverse (F09A)	1	03-Up	203976G	N.L.
310C	Return Spring, Reverse (F10A)	1	07-Up	203976N	N.L.
312C	Piston, Reverse Clutch (Bonded) (F06A)	1	00-Up	203966H	N.L.

ILL.		Qty.	Year	Part #	Ref. #
DRUMS & COMPONENTS (Cont.)					
312C	Piston, Reverse Clutch (Bonded) (F08A)	1	02-Up	203966K	N.L.
312C	Piston, Reverse Clutch (Bonded) (F09A)	1	03-Up	203966G	N.L.
312C	Piston, Reverse Clutch (Bonded) (F10A)	1	07-Up	203966N	N.L.
N.I.	Return Spring, Reverse Spring Plate (F10A)	1	07-Up	203977N	N.L.
PLANETS & COMPONENTS					
232B	Ring Gear (.725" Thick) (F09A)	1	03-Up	203594G	N.L.
232B	Ring Gear (.570" Thick) (F10A)	1	07-Up	203594N	N.L.
238B	Planet (4 Gear) (F09A)	1	03-Up	203584G	N.L.
238B	Planet (5 Gear) (F09A)	1	03-Up	203584H	N.L.
238B	Planet (F10A)	1	07-Up	203584N	N.L.
SUN GEARS					
234B	Sun Gear (.680" Thick, 4 Clutch) (F09A)	1	03-Up	203614G	N.L.
234B	Sun Gear (.570" Thick, 3 Clutch) (F10A)	1	07-Up	203614N	N.L.
SHELLS & SUPPORTS					
N.I.	Support, Front Cover (F10A)	1	07-Up	203632N	N.L.
SHAFTS					
156A	Shaft, Input (3 Large, 1 Small Ring) (F09A)	1	03-Up	203670G	N.L.
156A	Shaft, Input (3 Large, 2 Small Ring) (F09A)	1	03-Up	203670H	N.L.
156A	Shaft, Input (6.75" Long) (F10A)	1	07-Up	203670N	N.L.
N.I.	Shaft, Pump (F10A)	1	07-Up	203671N	N.L.
VALVE BODIES & GOVERNORS					
520E	Valve Body, (F06A)	1	00-Up	203740B	N.L.
520E	Valve Body, (F08A)	1	02-Up	203740K	N.L.
520E	Valve Body, Cast FYO#2A (F09A)	1	03-Up	203740G	N.L.
520E	Valve Body, Cast FYO#1B (F09A)	1	03-Up	203740H	N.L.
520E	Valve Body (F10A)	1	07-Up	203740N	N.L.
DIFFERENTIALS					
122A	Transfer Gear w/ Pinion (F09A)	1	03-Up	203730G	N.L.
122A	Transfer Gear w/ Pinion (F10A)	1	07-Up	203730N	N.L.
204B	Differential Ring Gear (F09A)	1	03-Up	203720G	N.L.
204B	Differential Ring Gear (F10A)	1	07-Up	203720N	N.L.
206B	Differential Housing (F09A)	1	03-Up	203716G	N.L.
206B	Differential Housing (F10A)	1	07-Up	203716N	N.L.
210B	Differential, 2wd (F09A)	1	03-Up	203715G	N.L.
210B	Differential, 4wd (F09A)	1	03-Up	203715H	N.L.
210B	Differential (F10A)	1	07-Up	203715N	N.L.
CHAINS AND SPROCKETS					
N.I.	Chain, Pump Drive (F10A)	1	07-Up	203703N	N.L.
N.I.	Sprocket, Pump Drive (F10A)	1	07-Up	203805N	N.L.
N.I.	Sprocket, Pump Driven (F10A)	1	07-Up	203806N	N.L.
CASES/HOUSINGS & COMPONENTS					
102A	Bell Housing w/ 1 Bolt Bracket (F09A)	1	03-Up	203750G	N.L.
102A	Bell Housing w/ 2 Bolt Bracket (F09A)	1	03-Up	203750H	N.L.
102A	Bell Housing (F10A)	1	07-Up	203750N	N.L.
314C	Case, Cast AKO # 3 (F09A)	1	03-Up	203760G	N.L.
314C	Case, Cast ACO # 2 (F09A)	1	03-Up	203760H	N.L.
314C	Case (F10A) (Chrysler/Mitsubishi)	1	07-Up	203760M	N.L.
314C	Case (F10A) (Nissan)	1	07-Up	203760N	N.L.
418D	Cover, End (F09A)	1	03-Up	203759G	N.L.
418D	Cover, End (F10A)	1	07-Up	203759N	N.L.
502E	Pan, Lower (Steel) (F09A)	1	03-Up	203765G	N.L.
502E	Pan, Lower (Aluminum) (F09A)	1	03-Up	203765H	N.L.
502E	Pan, Lower (F10A) (Chrysler/Mitsubishi)	1	07-Up	203765M	N.L.
502E	Pan, Lower (F10A) (Nissan)	1	07-Up	203765N	N.L.
CVT COMPONENTS					
110A	Nut, Driven Pulley (Rear) (F10A)	1	07-Up	203799N	N.L.
112A	Output Gear, Driven Pulley (F09A)	1	03-Up	203708G	N.L.

ILL.		Qty.	Year	Part #	Ref. #
CVT COMPONENTS (Cont.)					
112A	Output Gear, Driven Pulley (F10A)	1	07-Up	203708N	N.L.
330C	Driven Pulley, Secondary (Complete) (F09A)	1	03-Up	203712G	N.L.
330C	Driven Pulley, Secondary (Complete) (F10A)	1	07-Up	203712N	N.L.
336C	Retainer, Driven Pulley Bearing (F09A)	1	03-Up	203843G	N.L.
336C	Retainer, Driven Pulley Bearing (F10A)	1	07-Up	203843N	N.L.
340C	Nut, Driven Pulley (Front) (F10A)	1	07-Up	203796N	N.L.
346C	Nut, Drive Pulley (F10A)	1	07-Up	203797N	N.L.
412D	Belt, Drive (F09A) (No Groove) (.960" Wide)	1	03-Up	203700G	N.L.
412D	Belt, Drive (RE0F09B) (Murano)	1	03-Up	203700H	N.L.
412D	Belt, Drive (F10A) (1 Groove) (1.180" Wide)	1	07-Up	203700N	N.L.
414D	Follower, Driven Pulley (F09A)	1	03-Up	203713G	N.L.
414D	Follower, Driven Pulley (F10A)	1	07-Up	203713N	N.L.
528E	Drive Pulley, Primary (Complete) (F09A)	1	03-Up	203711G	N.L.
528E	Drive Pulley, Primary (Complete) (F10A)	1	07-Up	203711N	N.L.
542E	Retainer, Drive Pulley Bearing (F09A)	1	03-Up	203842G	N.L.
542E	Retainer, Drive Pulley Bearing (F10A)	1	07-Up	203842N	N.L.
N.I.	CVT Kit, Drive & Driven Pulleys, Belt (F09A)	1	03-Up	203710GK	N.L.
N.I.	CVT Kit, Drive & Driven Pulleys, Belt (F10A)	1	07-Up	203710NK	N.L.
MISCELLANEOUS COMPONENTS					
N.I.	Cover, Cooler Filter (F10A)	1	07-Up	203769N	N.L.

Notes

Notes

A

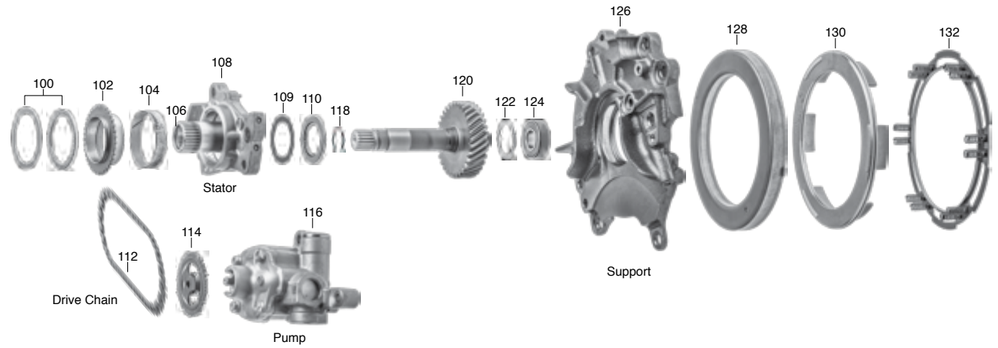
100
102
104
106
108
Stator
109
110
118
120
122
124
126
Support
128
130
132
112
Drive Chain
114
116
Pump

B

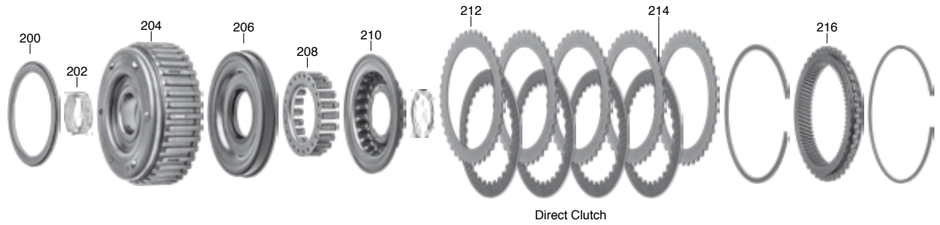
200
202
204
206
208
210
212
214
216
Direct Clutch

C

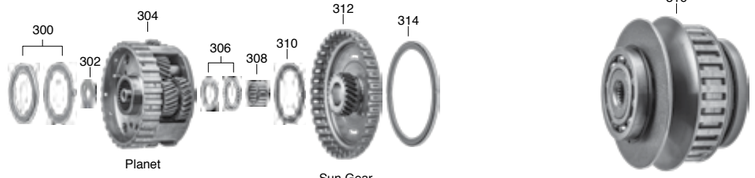
300
302
304
Planet
306
308
310
312
Sun Gear
314

Driven Pulley
316


318
Drive Belt

D

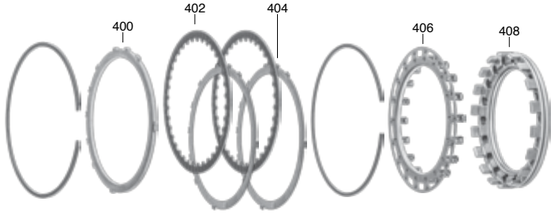
400
402
404
Low Clutch
406
408


410
Drive Pulley

A

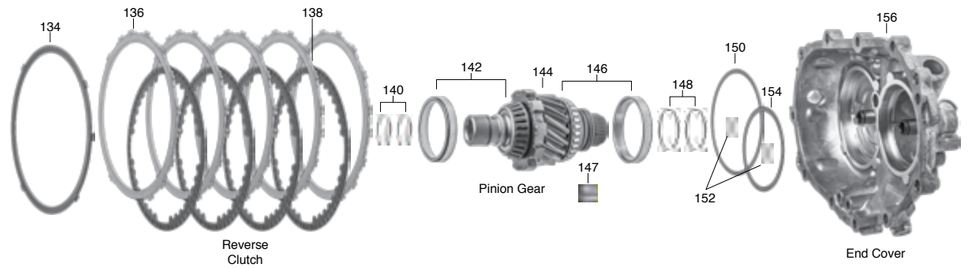
134
136
138
Reverse
Clutch
140
142
144
146
Pinion Gear
147
148
150
152
154
156
End Cover

B

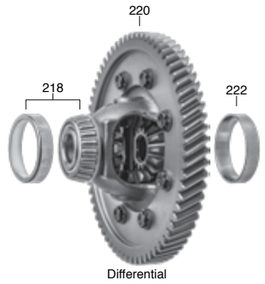
220
218
222
Differential


224
226

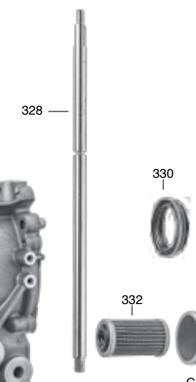
328
330
332
334
Cooler Filter


324
Bell Housing
322
320

326
Case

C




412
Valve Body

D








414
Filter
416
418
Pan

ILL.		Qty.	Year	Part #	Ref. #
MASTER OVERHAUL KITS (WITH STEELS)					
N.I.	JF015E	1	10-Up	323006	N.L.
MASTER OVERHAUL KITS (LESS STEELS)					
N.I.	JF015E	1	10-Up	323004	N.L.
OVERHAUL KITS (WITH RINGS AND SEALS)					
N.I.	JF015E	1	10-Up	323002	N.L.
BONDED PISTONS					
206B	Piston, Direct Clutch (Bonded)	1	10-Up	323964	N.L.
210B	Retainer, Direct Clutch (Bonded)	1	10-Up	323984	N.L.
GASKETS & O-RINGS					
416D	Pan Gasket	1	10-Up	323300	N.L.
METAL CLAD SEALS					
226B	Manual	1	10-Up	323072	N.L.
320C	Converter Hub	1	10-Up	323070	N.L.
322C	Axle (Left & Right)	2	10-Up	323076	N.L.
SEALING RINGS & KITS					
N.I.	Sealing ring kit	1	10-Up	323175K	N.L.
118A	Input Shaft	1	10-Up	323177	N.L.
140A	Pinion Gear Shaft, Front	2	10-Up	323183	N.L.
148A	Pinion Gear Shaft, Rear	2	10-Up	323184	N.L.
152A	End Cover	2	10-Up	323185	N.L.
FRICTION PLATES					
138A	Reverse	4	10-Up	323110	N.L.
214B	Direct	4	10-Up	323108	N.L.
402D	Low	2	10-Up	323104	N.L.
STEEL PLATES					
136A	Reverse	5	10-Up	323130	N.L.
212B	Direct	5	10-Up	323128	N.L.
404D	Low	2	10-Up	323124	N.L.
PRESSURE PLATES					
400D	Low	1	10-Up	323144	N.L.
FILTERS					
332C	Cooler	1	10-Up	323013	N.L.
412D	Main	1	10-Up	323010	N.L.
BUSHINGS					
104A	Pump Drive Gear	1	10-Up	323035	N.L.
106A	Stator Support	1	10-Up	323036	N.L.
147A	Pinion Gear	1	10-Up	323065	N.L.
202B	Direct Drum	1	10-Up	323046	N.L.
THRUST WASHERS/BEARINGS					
WASHERS					
302C	Sun Gear, Front	1	10-Up	323219	N.L.
310C	Reverse Sun Gear w/Hub	1	10-Up	323221	N.L.
BEARINGS					
100A	Race, Pump Drive Gear	1	10-Up	323209	N.L.
100A	Bearing, Pump Drive Gear	1	10-Up	323209	N.L.
110A	Bearing, Input Gear	1	10-Up	323212	N.L.
200B	Bearing, Direct Drum (Front)	1	10-Up	323214	N.L.
300C	Bearing, Planet (Front)	1	10-Up	323216	N.L.
300C	Race, Planet (Front)	1	10-Up	323216	N.L.
306C	Race, Sun Gear	1	10-Up	323218	N.L.
306C	Bearing, Sun Gear	1	10-Up	323218	N.L.
314C	Bearing, Reverse Sun Gear w/Hub	1	10-Up	323220	N.L.

ILL.		Qty.	Year	Part #	Ref. #
ELECTRICAL COMPONENTS					
N.I.	Solenoid, PWM (Large)	4	10-Up	323431	N.L.
N.I.	Solenoid, PWM (Small)	1	10-Up	323432	N.L.
N.I.	Switch, MLPS	1	10-Up	323410	N.L.
N.I.	Switch, Pressure (Large)	1	10-Up	323417	N.L.
N.I.	Switch, Pressure (Small)	1	10-Up	323418	N.L.
N.I.	Harness w/ Case Connector	1	10-Up	323446	N.L.
PUMPS					
124A	Remote	1	10-Up	323500	N.L.
PUMP COMPONENTS					
102A	Pump Drive Gear	1	10-Up	323530	N.L.
114A	Pump Driven Gear	1	10-Up	323531	N.L.
DRUMS & COMPONENTS					
130A	Piston, Reverse Clutch	1	10-Up	323966	N.L.
134A	Cushion, Reverse Clutch	1	10-Up	323854	N.L.
204B	Drum, Direct Clutch	1	10-Up	323554	N.L.
206B	Piston, Direct Clutch (Bonded)	1	10-Up	323964	N.L.
210B	Retainer, Direct Clutch (Bonded)	1	10-Up	323984	N.L.
408D	Piston, Low Clutch	1	10-Up	323962	N.L.
PLANETS AND COMPONENTS					
216B	Ring Gear, Reverse	1	10-Up	323594	N.L.
304C	Compound w/ Sun Gear	1	10-Up	323584	N.L.
SUN GEARS					
312C	Reverse w/Low Hub	1	10-Up	323614	N.L.
SHELLS & SUPPORTS					
108A	Stator Support	1	10-Up	323632	N.L.
126A	Support, Main Case	1	10-Up	323718	N.L.
128A	Support, Reverse Piston	1	10-Up	323952	N.L.
VALVE BODIES & GOVERNORS					
412D	Valve Body w / Solenoids	1	10-Up	323740	N.L.
CHAINS AND SPROCKETS					
112A	Chain Pump Drive	1	10-Up	323703	N.L.
DIFFERENTIALS					
220B	Differential Complete	1	10-Up	323715	N.L.
CASES/HOUSINGS & COMPONENTS					
324C	Bell Housing	1	10-Up	323750	N.L.
326C	Case	1	10-Up	323760	N.L.
418D	Bottom Pan	1	10-Up	323765	N.L.
CVT COMPONENTS					
316C	Driven Pulley w/ Reluctor	1	10-Up	323712	N.L.
318C	Drive Belt	1	10-Up	323700	N.L.
410D	Drive Pulley w/ Reluctor	1	10-Up	323711	N.L.
MISCELLANEOUS COMPONENTS					
109A	Shim, Input Gear (Front)	1	10-Up	323274	N.L.
122A	Shim, Input Gear (Rear)	1	10-Up	323275	N.L.
124A	Bearing, Input Gear	1	10-Up	323279	N.L.
142A	Race/Bearing, Pinion Gear (Front)	1	10-Up	323281	N.L.
144A	Pinion Gear w/ Park Gear	1	10-Up	323730	N.L.
146A	Race/Bearing, Pinion Gear (Rear)	1	10-Up	323282	N.L.
150A	Shim, Driven Pulley	1	10-Up	323293	N.L.
154A	Shim, Drive Pulley	1	10-Up	323276	N.L.
156A	Cover, End	1	10-Up	323759	N.L.
218B	Race/Bearing, Differential Carrier	2	10-Up	323291	N.L.
308C	Bearing, Sun Gear (Caged)	1	10-Up	323285	N.L.
334C	Cover, Cooler Filter	1	10-Up	323769	N.L.

ILL.		Qty.	Year	Part #	Ref. #
MISCELLANEOUS COMPONENTS (Cont.)					
N.I.	Gear, Drive Pulley	1	10-Up	323707	N.L.
N.I.	Bearing, Pump Driven Gear	1	10-Up	323278	N.L.
N.I.	Bearing, Drive Pulley (Front)	1	10-Up	323235	N.L.
N.I.	Bearing, Drive Pulley (Rear)	1	10-Up	323236	N.L.
N.I.	Bearing, Driven Pulley (Front)	1	10-Up	323228	N.L.
N.I.	Bearing, Driven Pulley (Rear)	1	10-Up	323229	N.L.

SEAL AFTERMARKET PRODUCTS
your source for engineered solutions

PRODUCT ANNOUNCEMENT

RE0F08A / JF009E 2002-Up

Seal Aftermarket Products now has the Overhaul Kit for the RE0F08A / JF009E series covering 2002-Up.
Please call your Sales Representative for pricing and availability

Innovative Engineered Solutions

- Includes OE Pan Gasket
- Plastic & PTFE Sealing Ring Kit
- Valve Body Screen Filters
- AWD Metal Clad Seal



Vehicle Coverage

Nissan
► Various Models 2002-Up [CVT 1.4L - 1.8L]

Rebuild Kits

Available Now
203002K - Overhaul Kit RE0F08A / JF009E 2002-Up

Available with 5 day lead-time
203004K - Master L/ Steels Kit RE0F08A / JF009E 2002-Up

Components



203070H
Seal RE0F08A JF009E
Converter 2002-Up
OE 31375-8E002



203077H
Seal RE0F08A JF009E Axle
Case Side 2002-Up
OE 38342-31X00



Release Date 9/2/2014

Sales Policy: All shipments are FCA Pembroke Park. Price and Availability subject to change
B00021 © 2014 Seal Aftermarket Products LLC. ALL RIGHTS RESERVED. Possession of price list does not constitute offer to sell
Disclaimer - All information has been checked for accuracy, however no liability can be assumed for errors and omissions

Seal Aftermarket Products LLC · 2315 SW 32nd Avenue · Pembroke Park FL 33023 · [P] (800) 582-2760 · [F] 954-364-2401 · www.sealaftermarketproducts.com

ILL.		Qty.	Year	Part #	Ref. #
OVERHAUL KITS (WITH RINGS AND SEALS)					
N.I.	AR4	1	88-Up	152002	N.L.
N.I.	AD4	1	91-Up	152002B	N.L.
N.I.	AD8	1	93-Up	152002D	N.L.
GASKETS & O-RINGS					
N.I.	Gasket, Pan (AR4)	1	88-Up	152300W	TO-733198
N.I.	Gasket, Pan (AD4)	1	91-Up	75300A	095-321-371
N.I.	Gasket, Pan (AD8)	1	93-Up	152300C	N.L.
N.I.	Gasket, End Cover (AD4)	1	91-Up	75304A	N.L.
N.I.	O-Ring, Pump	1	88-Up	75311A	095-321-386
METAL CLAD SEALS					
N.I.	Pump	1	88-Up	75070A	095-321-243D
N.I.	Axle (Right) (AD4)	1	91-Up	65076A	020-301-189M
N.I.	Axle (Right) (AR4)	1	88-Up	152076	N.L.
N.I.	Axle (Left) (AD4)	1	91-Up	65076A	020-301-189M
N.I.	Axle (Left) (AR4)	1	88-Up	152077	N.L.
FRICTION PLATES					
N.I.	K3 (3-4)	6-7	91-Up	75100B	N.L.
N.I.	K3 (3-4) (AR4 Only)	6-8	88-Up	75100AB	095-323-941C
N.I.	B2 (2-4)	4-6	88-Up	75104A	095-323-465D
N.I.	K2 (Direct/Reverse)	4-5	88-Up	75108A	095-323-241A
N.I.	K1 (Forward)	4-5	88-Up	75108A	095-323-241A
N.I.	B1 (Low/ Reverse)	4-6	88-Up	75114A	095-323-231A
STEEL PLATES					
N.I.	K3 (3-4) (.063")	5-7	91-Up	75120AB	N.L.
N.I.	K3 (3-4) (.079") (AR4 Only)	5-7	88-Up	75120AC	N.L.
N.I.	B2 (2-4)	5-7	88-Up	75124A	097-323-463
N.I.	K2 (Direct/Reverse)	4-5	88-Up	75128A	N.L.
N.I.	K1 (Forward) (.079")	4-5	88-95	75128A	N.L.
N.I.	K1 (Forward) (.057")	4-5	95-Up	75128AA	N.L.
N.I.	B1 (Low/ Reverse)	4-6	91-Up	75134A	095-323-227
FILTERS					
N.I.	AR4	1	88-Up	152010	77-00-746-294
N.I.	AD4	1	91-Up	152010B	77-00-858-922
N.I.	AD8	1	93-Up	152010C	77-00-866-793

Notes

A

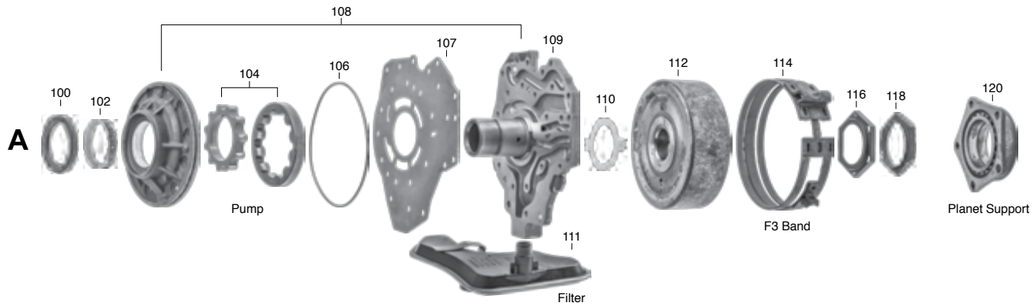
100
102
104
106
107
108
109
110
111
112
114
116
118
120
Pump
Filter
F3 Band
Planet Support

B

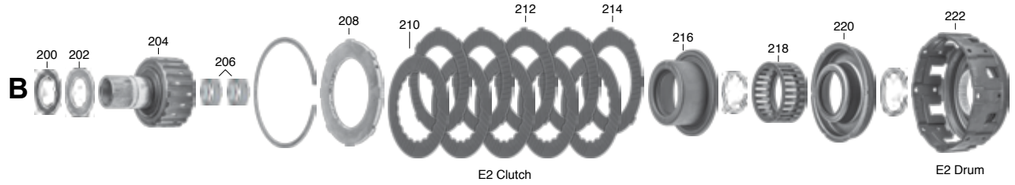
200
202
204
206
208
210
212
214
216
218
220
222
E2 Clutch
E2 Drum

C

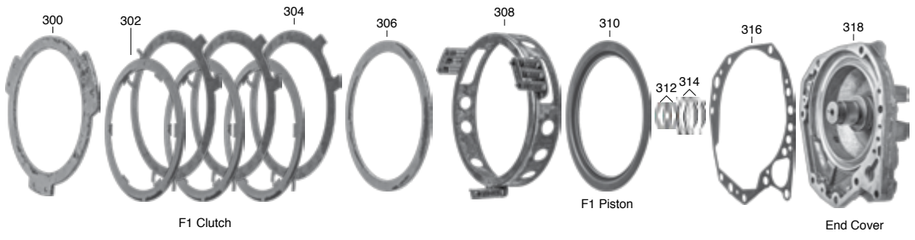
300
302
304
306
308
310
312
314
316
318
F1 Clutch
F1 Piston
End Cover

D

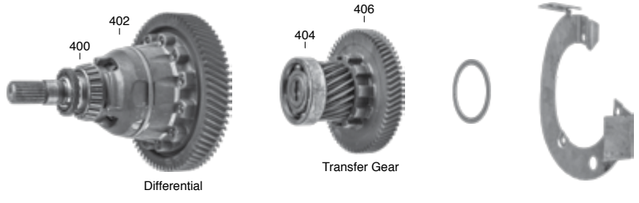
400
402
404
406
Differential
Transfer Gear

E

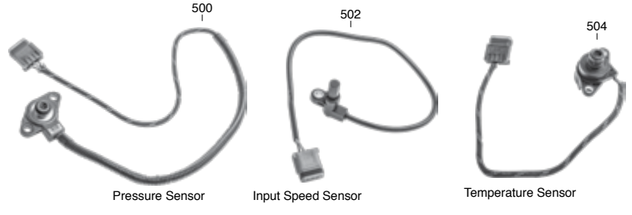
500
502
504
Pressure Sensor
Input Speed Sensor
Temperature Sensor

A

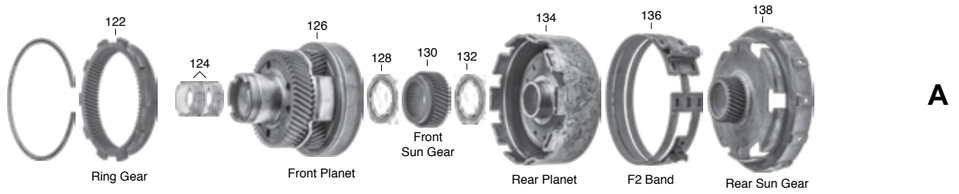
122
124
126
128
130
132
134
136
138
Ring Gear
Front Planet
Front
Sun Gear
Rear Planet
F2 Band
Rear Sun Gear

B

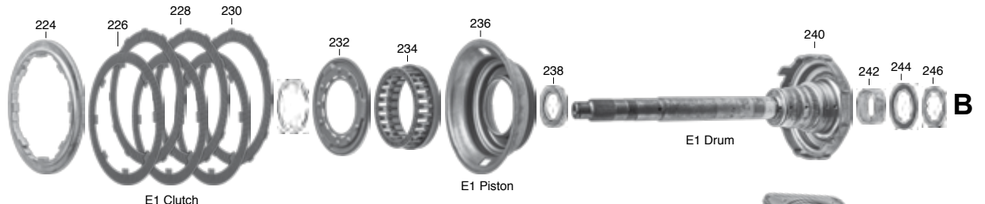
224
226
228
230
232
234
236
238
240
242
244
246
E1 Clutch
E1 Piston
E1 Drum

C

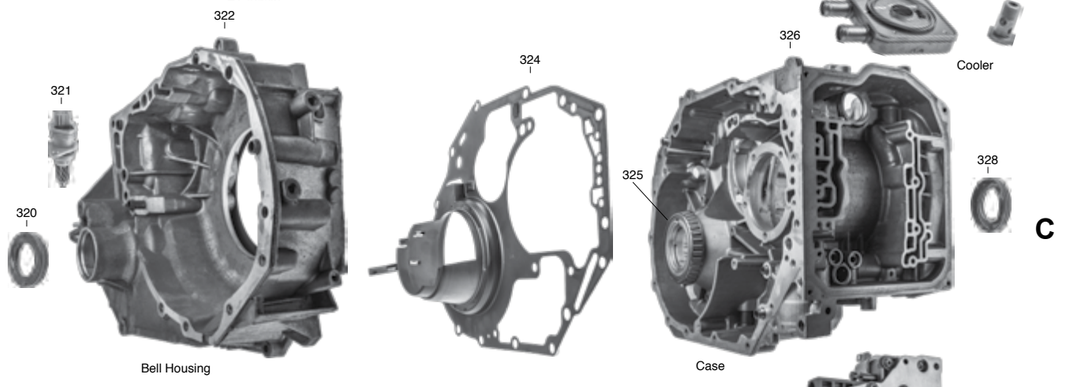
320
321
322
324
325
326
328
Bell Housing
Case
Cooler

D

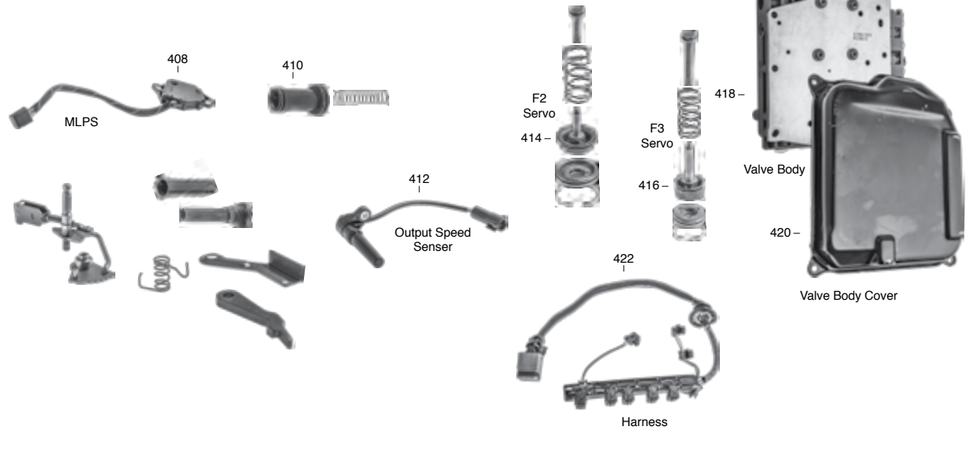
408
410
412
414
416
418
420
422
MLPS
F2
Servo
F3
Servo
Output Speed
Senser
Valve Body
Valve Body Cover
Harness

ILL.		Qty.	Year	Part #	Ref. #
MASTER OVERHAUL KITS (WITH STEELS)					
N.I.	DPO (AL4)	1	98-Up	252006	N.L.
MASTER OVERHAUL KITS (LESS STEELS)					
N.I.	DPO (AL4)	1	98-Up	252004	N.L.
OVERHAUL KITS (WITH RINGS AND SEALS)					
N.I.	DPO (AL4)	1	98-Up	252002	N.L.
BONDED PISTONS					
N.I.	Piston Kit	1	98-Up	252960K	N.L.
216B	Retainer, E2 Clutch (Bonded)	1	98-Up	252985	N.L.
220B	Piston, E2 Clutch (Bonded)	1	98-Up	252965	N.L.
232B	Retainer, E1 Clutch (Bonded)	1	98-Up	252984	N.L.
236B	Piston, E1 Clutch (Bonded)	1	98-Up	252964	N.L.
310C	Piston, F1 Brake (Bonded)	1	98-Up	252967	N.L.
GASKETS & O-RINGS					
106A	Pump O'Ring	1	98-Up	252311	N.L.
316C	End Cover Gasket	1	98-Up	252305	N.L.
324C	Bell Housing to Case Gasket	1	98-Up	252318	N.L.
N.I.	Side Cover Gasket	1	98-Up	252301	N.L.
METAL CLAD SEALS					
100A	Pump	1	98-Up	252070	N.L.
320C	Axle/Bell Housing	1	98-Up	252076	N.L.
328C	Axle/Case	1	98-Up	252077	N.L.
N.I.	Manual Shaft	1	98-Up	252072	N.L.
SEALING RINGS & KITS					
312C	End Cover (Small)	1	98-Up	252185	N.L.
314C	End Cover (Large)	2	98-Up	252187	N.L.
N.I.	Input Shaft	1	98-Up	252189	N.L.
FRICTION PLATES					
210B	E2, Internal	5	98-Up	252106	N.L.
226B	E1, Internal	2	98-Up	252104	N.L.
302C	F1, Internal	2	98-Up	252108	N.L.
STEEL PLATES					
214B	E2, External	5	98-Up	252126	N.L.
230B	E1, External	2	98-Up	252124	N.L.
304C	F1, External	2	98-Up	252128	N.L.
PRESSURE PLATES					
208B	E2 Clutch	1	98-Up	252146	N.L.
224B	E1 Clutch	1	98-Up	252148	N.L.
300C	F1 Brake Backing	1	98-Up	252154	N.L.
306C	F1 Brake Apply	1	98-Up	252155	N.L.
FILTERS					
111A	Main	1	98-Up	252010	N.L.
BANDS					
114A	F2/F3	2	98-Up	252020	N.L.
BUSHINGS					
102A	Pump Body	1	98-Up	252034	N.L.
124A	Output Planet	2	98-Up	252053	N.L.
206B	E2 Hub	2	98-Up	252054	N.L.
242B	E1 Drum	1	98-Up	252048	N.L.
N.I.	Pump Cover (Front)	1	98-Up	252036	N.L.
N.I.	Pump Cover (Rear)	1	98-Up	252037	N.L.

ILL.		Qty.	Year	Part #	Ref. #
THRUST WASHERS/BEARINGS					
WASHERS					
110A	Pump	1	98-Up	252211	N.L.
116A	Output Gear Nut	1	98-Up	252239	N.L.
BEARINGS					
128A	Output Planet	1	98-Up	252238	N.L.
132A	Front Sun Gear	1	98-Up	252241	N.L.
200B	Bearing Rear Sun Gear	1	98-Up	252244	N.L.
202B	Race, Rear Sun Gear	1	98-Up	252245	N.L.
238B	Bearing E2 Hub	1	98-Up	252248	N.L.
244B	Bearing E1 Drum	1	98-Up	252231	N.L.
246B	Race, E1 Drum	1	98-Up	252232	N.L.
N.I.	Front Planet	1	98-Up	252242	N.L.
ELECTRICAL COMPONENTS					
321C	Sensor, Speedo	1	98-Up	252436B	N.L.
408D	Switch, MLPS	1	98-Up	252410	N.L.
412D	Sensor, OSS	1	98-Up	252436	N.L.
422D	Harness w/Connector	1	98-Up	252446	N.L.
500E	Sensor, Pressure	1	98-Up	252442	N.L.
502E	Sensor, ISS	1	98-Up	252438	N.L.
504E	Sensor, Temp	1	98-Up	252437	N.L.
N.I.	Solenoid, Shift	6	98-Up	252421	N.L.
N.I.	Solenoid, EPC/Lockup	2	98-Up	252431	N.L.
PUMPS					
108A	Pump Assembly	1	98-Up	252500	N.L.
PUMP COMPONENTS					
104A	Rotor	1	98-Up	252530	N.L.
107A	Pump Plate	1	98-Up	252544	N.L.
109A	Pump Cover	1	98-Up	252520	N.L.
DRUMS & COMPONENTS					
112A	Drum, F3 Band	1	98-Up	252551	N.L.
204B	Hub, E2 Clutch	1	98-Up	252590	N.L.
216B	Retainer, E2 Clutch (Bonded)	1	98-Up	252985	N.L.
218B	Return Spring, E2 Clutch	1	98-Up	252975	N.L.
220B	Piston, E2 Clutch (Bonded)	1	98-Up	252965	N.L.
222B	Drum, E2 Clutch	1	98-Up	252555	N.L.
232B	Retainer, E1 Clutch (Bonded)	1	98-Up	252984	N.L.
234B	Return Spring, E1 Clutch	1	98-Up	252974	N.L.
236B	Piston, E1 Clutch (Bonded)	1	98-Up	252964	N.L.
240B	Drum E1 Clutch w/Input	1	98-Up	252554	N.L.
308C	Return Spring, F1 Brake	1	98-Up	252977	N.L.
310C	Piston, F1 Brake (Bonded)	1	98-Up	252967	N.L.
PLANETS AND COMPONENTS					
122A	Ring Gear, Rear	1	98-Up	252594	N.L.
126A	Planet, Output with Output Gear	1	98-Up	252582	N.L.
134A	Planet, Rear with F2 Drum	1	98-Up	252584	N.L.
SUN GEARS					
130A	Front	1	98-Up	252612	N.L.
138A	Rear w/Shell	1	98-Up	252614	N.L.
VALVE BODIES & GOVERNORS					
418D	Valve Body	1	98-Up	252740	N.L.
CASES/HOUSINGS & COMPONENTS					
322C	Bell Housing	1	98-Up	252750	N.L.
326C	Case	1	98-Up	252760	N.L.

ILL.		Qty.	Year	Part #	Ref. #
MISCELLANEOUS COMPONENTS					
118A	Output Gear Nut	1	98-Up	252795	N.L.
120A	Support, Output Gear	1	98-Up	252711	N.L.
318C	Cover, End	1	98-Up	252759	N.L.
325C	Bearing, Differential (Large)	1	98-Up	252289	N.L.
400D	Bearing, Differential (Small)	1	98-Up	252292	N.L.
402D	Final Drive, Differential	1	98-Up	252715	N.L.
404D	Bearing, Transfer Gear	1	98-Up	252263	N.L.
406D	Transfer Gear w/Pinion	1	98-Up	252714	N.L.
420D	Cover, Valve Body	1	98-Up	252765	N.L.
SERVOS AND ACCUMULATORS					
410D	Piston, Accumulator	1	98-Up	252927	N.L.
414D	Servo, F2 Piston (Large) (Bonded)	1	98-Up	252902	N.L.
416D	Servo, F3 Piston (Small) (Bonded)	1	98-Up	252904	N.L.

Notes

SEAL AFTERMARKET PRODUCTS
your source for engineered solutions

PRODUCT ANNOUNCEMENT

Bushing Kit DPO AL4 1998-Up

Seal Aftermarket Products now has the complete bushing kit for the DPO/AL4 Transmission covering 1998-Up.
Please call your Sales Representative for pricing & kit availability.

252030A
Bushing Kit DPO AL4 1998-Up [10 Bushings]



Individual bushings available

252032 DPO Stator (Front/Small) to Input Shaft 1998-Up
252031 DPO Pump Body to Coverter 1998-Up
252034 DPO F3 Brake Drum (Front) to Input Shaft 1998-Up
252035 DPO F3 Brake Drum (Rear) to Input Shaft 1998-Up
252036 DPO Planetary Carrier To F3 Brake Drum 1998-Up
252037 DPO E2 Clutch Hub to Input Shaft 1998-Up
252033 DPO Stator (Rear/Large) to Input Shaft 1998-Up
252038 DPO E2 Clutch Hub to Rear Cover 1998-Up

Release Date 8/20/2014

Sales Policy: All shipments are FCA Pembroke Park. Price and Availability subject to change

B000018

© 2014 Seal Aftermarket Products LLC. ALL RIGHTS RESERVED. Possession of price list does not constitute offer to sell
Disclaimer - All information has been checked for accuracy, however no liability can be assumed for errors and omissions

Seal Aftermarket Products LLC · 2315 SW 32nd Avenue · Pembroke Park FL 33023 · [P] (800) 582-2760 · [F] 954-364-2401 · www.sealaftermarketproducts.com

ILL.		Qty.	Year	Part #	Ref. #
MASTER OVERHAUL KITS (WITH STEELS)					
N.I.	M41 w/o Transfer Plates	1	75-82	13006	N.L.
N.I.	M41 w/o Transfer Plates	1	83-84	13006A	N.L.
N.I.	M41 w/o Transfer Plates	1	85-94	13006B	N.L.
MASTER OVERHAUL KITS (LESS STEELS)					
N.I.	M41 w/o Transfer Plates	1	75-82	13004	N.L.
N.I.	M41 w/o Transfer Plates	1	83-84	13004A	N.L.
N.I.	M41 w/o Transfer Plates	1	85-94	13004B	N.L.
OVERHAUL KITS (WITH RINGS AND SEALS)					
N.I.	M41	1	75-82	13002	N.L.
N.I.	M41	1	83-94	13002A	N.L.
GASKETS & O-RINGS					
N.I.	Gasket, Bottom Pan	1	75-82	13300	N.L.
N.I.	Gasket, Bottom Pan	1	83-89	13300A	N.L.
N.I.	Gasket, Bottom Pan	1	90-94	13300B	N.L.
METAL CLAD SEALS					
N.I.	Front	1	75-94	13070	N.L.
N.I.	Rear (Extension Housing) 4WD	1	75-94	13074	N.L.
N.I.	Right Axle (2" OD) Turbo 4WD	1	75-94	13076A	N.L.
N.I.	Left Axle (2" OD) Turbo 4WD	1	75-94	13077A	N.L.
N.I.	Speedo Shaft	1	75-94	13078	N.L.
N.I.	Governor to Case	1	75-94	13079	N.L.
SEALING RINGS & KITS					
N.I.	Ring Kit	1	75-94	13175K	N.L.
FRICTION PLATES					
N.I.	Direct & Forward	6-8	75-94	53100	N.L.
N.I.	Low & Reverse (.092") (51T)	3-4	75-82	13114	N.L.
N.I.	Low & Reverse (.095") (45T)	4-5	83-84	13114A	N.L.
N.I.	Low & Reverse (.091") (48T)	5	85-94	13114C	N.L.
N.I.	Transfer Case	3-4	83-94	13118	N.L.
STEEL PLATES					
N.I.	Direct	3-4	75-94	53120	N.L.
N.I.	Forward	3-4	75-94	53120	N.L.
N.I.	Low & Reverse (.079")	3-4	75-82	53134	N.L.
N.I.	Low & Reverse (.071")	4-5	83-84	13134A	N.L.
N.I.	Low & Reverse (.091")	5	85-94	13134B	N.L.
N.I.	Transfer Case	2-3	83-94	13138	N.L.
FILTERS					
N.I.	M41	1	75-94	53010	N.L.
FILTER KITS					
N.I.	M41	1	75-94	13011C	N.L.
BANDS					
N.I.	Intermediate	1	75-94	13022	N.L.
BUSHINGS					
N.I.	Bushing Kit	1	75-94	13030	N.L.
THRUST WASHERS/BEARINGS					
WASHERS					
N.I.	Direct Drum, 1.70mm (.067")	1	75-94	53211A	N.L.
N.I.	Direct Drum, 1.90mm (.075")	1	75-94	53211B	N.L.
N.I.	Direct Drum, 2.10mm (.083)	1	75-94	53211C	N.L.
ONE WAY CLUTCHES					
N.I.	Sprag, Low	1	81-94	13652B	N.L.

ILL.		Qty.	Year	Part #	Ref. #
MISCELLANEOUS COMPONENTS					
N.I.	Modulator, Adjustable (Non Turbo)	1	75-94	13160	N.L.
N.I.	Modulator, Adjustable (Turbo)	1	75-94	13160A	N.L.
TECHNICAL MANUALS					
N.I.	M41	1	75-94	13400	N.L.

Notes

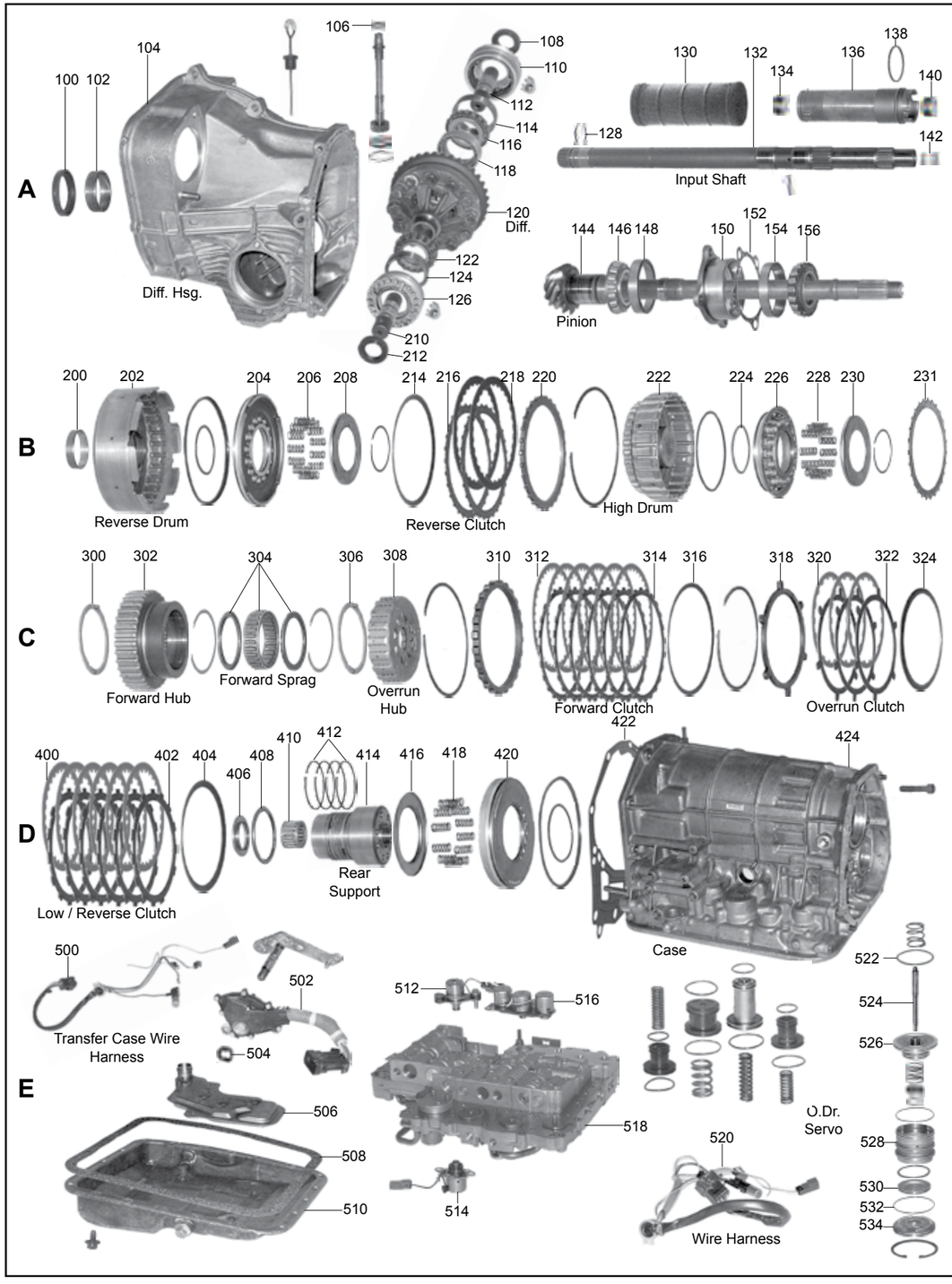
A
100 102
104
106
108
110
112
114
116
118
120
Diff.
Diff. Hsg.
122
124
126
210
212
128
130
132
134
136
138
140
142
Input Shaft
144 146 148
150
152
154 156
Pinion
B
200 202
204 206 208
214 216
218 220
222
224 226 228 230
231
Reverse Drum
Reverse Clutch
High Drum
C
300 302
304
306 308
310 312
314 316
318 320
322 324
Forward Hub
Forward Sprag
Overrun Hub
Forward Clutch
Overrun Clutch
D
400
402 404
406 408
410
412
414 416
418 420
422
424
Low / Reverse Clutch
Rear Support
Case
E
500
502
504
Transfer Case Wire Harness
506
508
510
512
516
518
514
520
Wire Harness
O.Dr. Servo
522
524
526
528
530
532
534

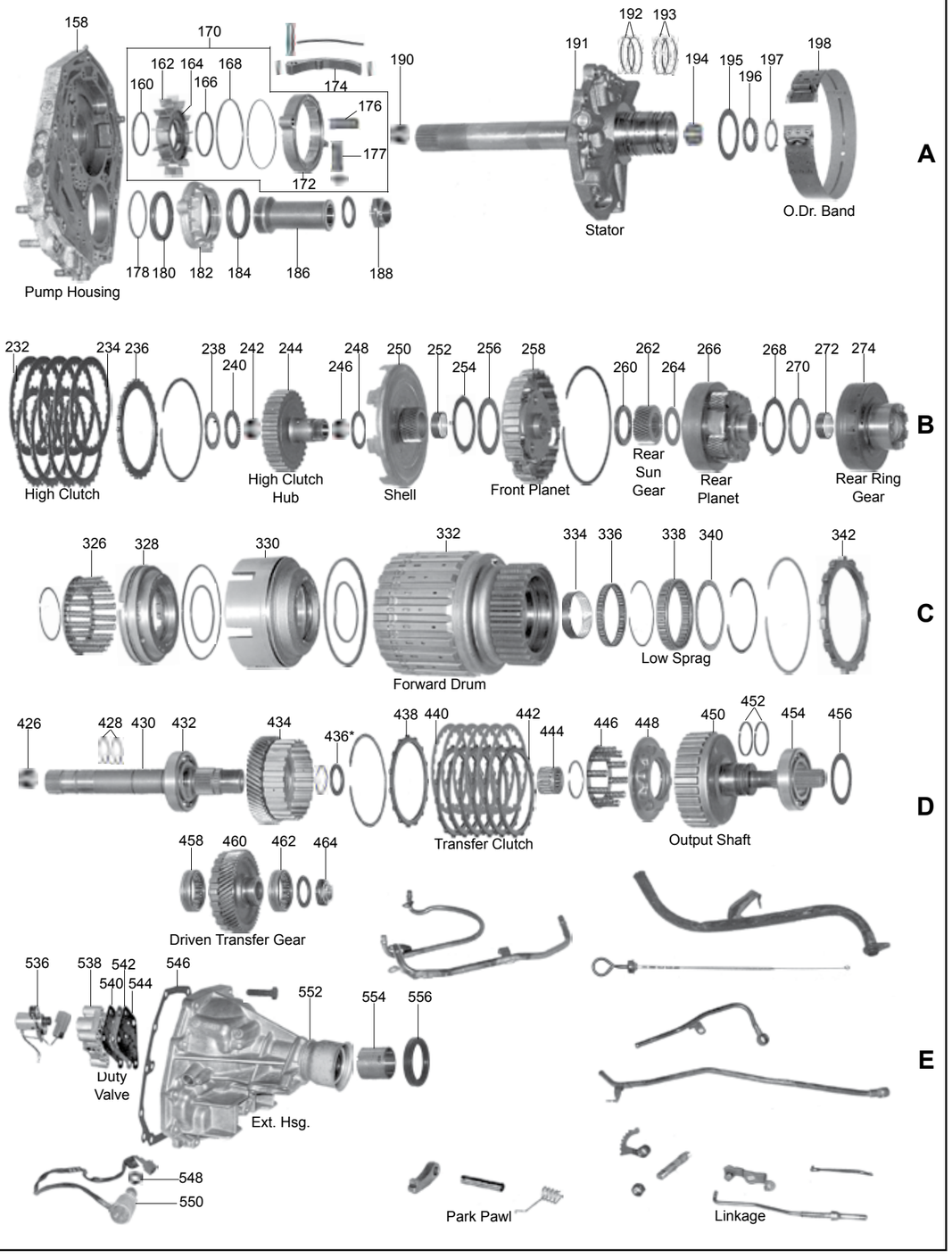
A
158
Pump Housing
160
162 164 166 168
170
172
174
176
177
178 180 182 184 186 188
190
191
192 193
194
195 196 197
198
Stator
O.Dr. Band
B
232
High Clutch
234 236
238 240 242 244
High Clutch Hub
246 248 250
Shell
252 254 256 258
Front Planet
260 262 264
Rear Sun Gear
266
Rear Planet
268 270 272 274
Rear Ring Gear
C
326 328
330
332
Forward Drum
334 336
338 340
Low Sprag
342
D
426
428 430 432
434
436*
438 440
442 444
Transfer Clutch
446 448
450 452
Output Shaft
454 456
458 460 462 464
Driven Transfer Gear
E
536
538 540 542 544
546
Duty Valve
Ext. Hsg.
548
550
552
554 556
Park Pawl
Linkage

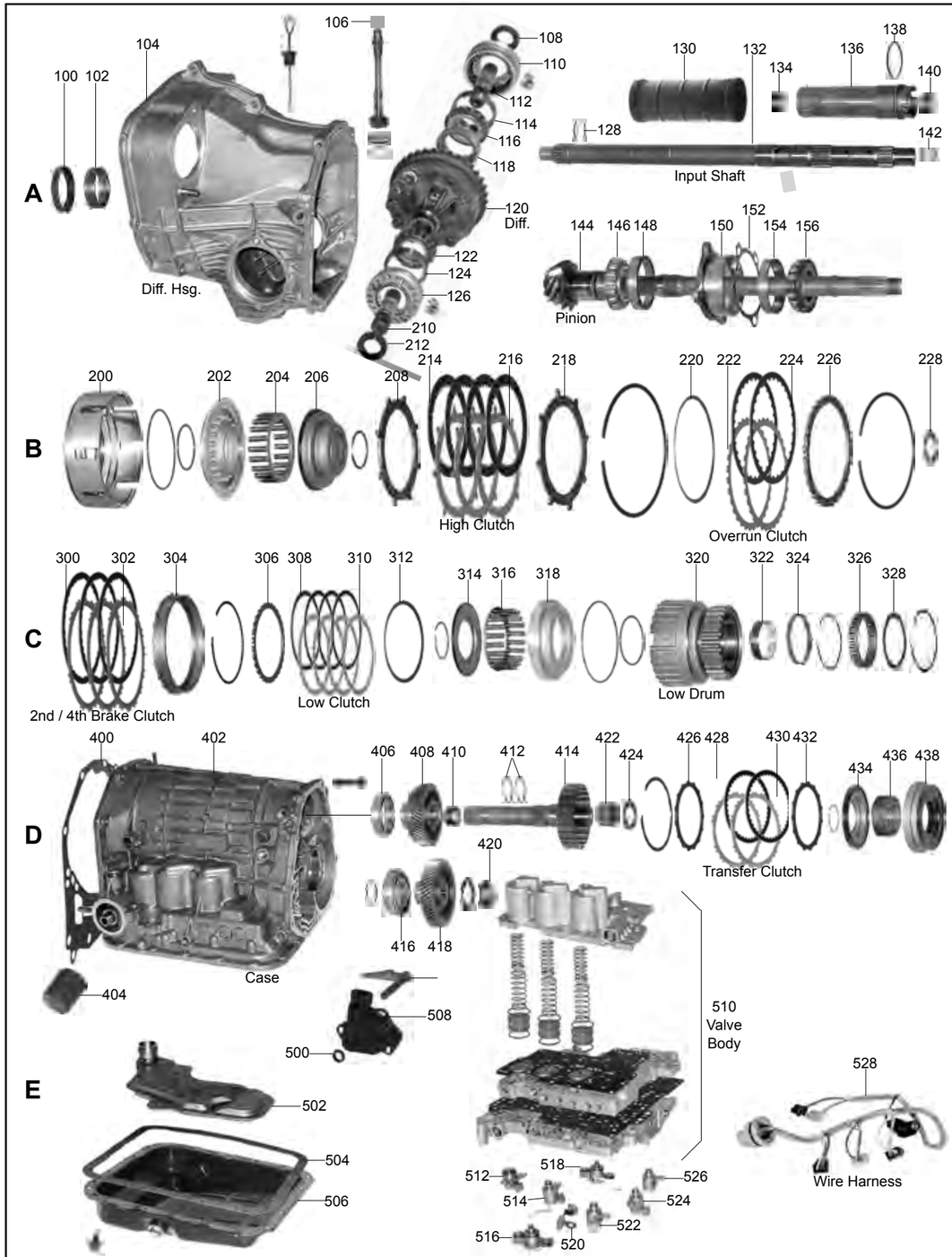
A
100 102
104
106
108
110
112
114
116
118
120
Diff.
Diff. Hsg.
122
124
126
128
130
132
134
136
138
140
142
Input Shaft
144 146 148
150
152
154 156
Pinion
210
212
B
200
202
204 206
208
214
216
218
High Clutch
220
222
224
226
228
Overrun Clutch
C
300 302
304
306 308
310
312
2nd / 4th Brake Clutch
Low Clutch
314 316
318
320
322
324
326
328
Low Drum
D
400
402
406 408 410
412
414
422
424
426 428
430 432
434
436 438
Transfer Clutch
Case
404
416 418
420
508
500
510
Valve
Body
E
502
504
506
512
514
516
518
520
522
524
526
528
Wire Harness

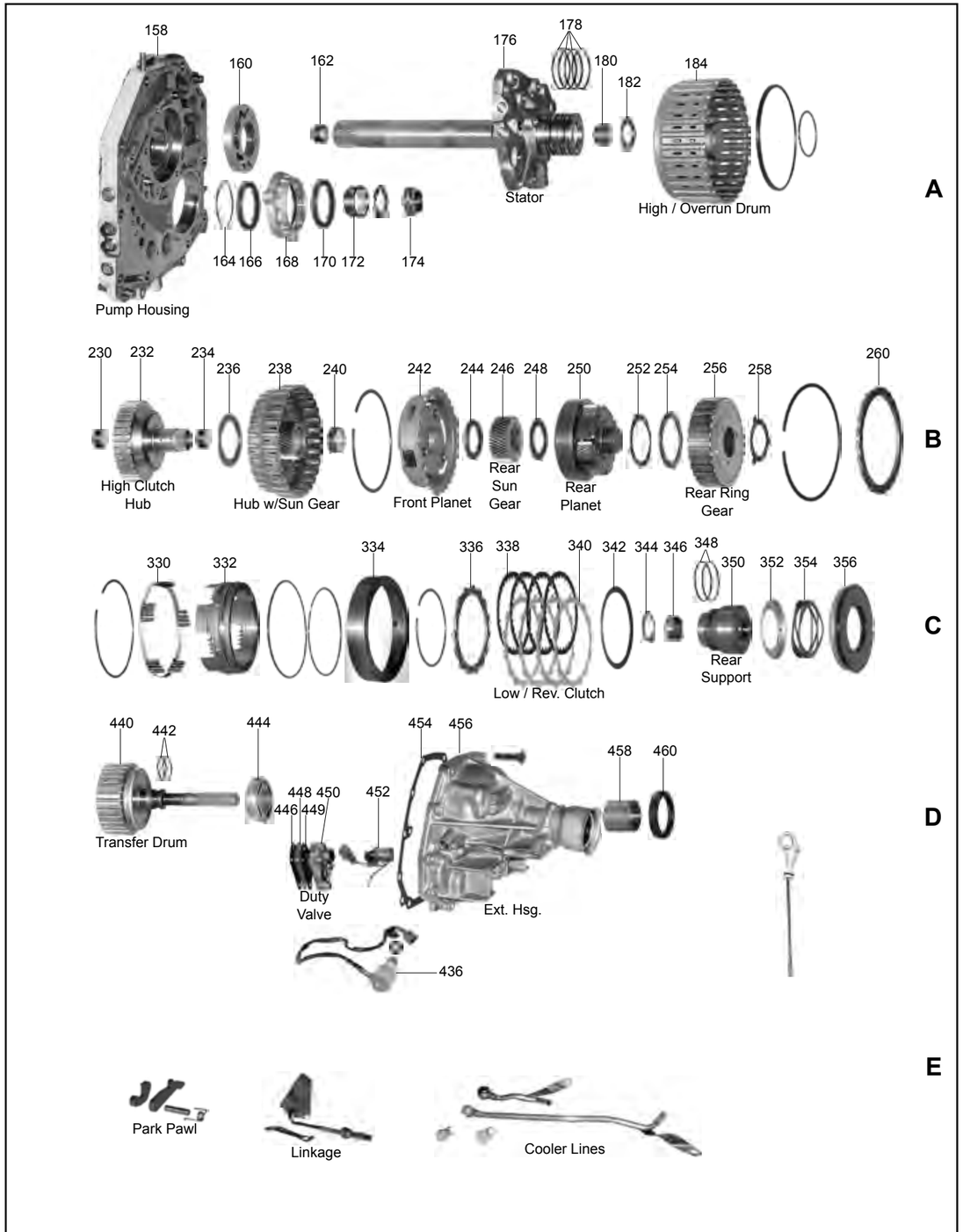
A
158
160
162
164 166
168
170 172
174
Pump Housing
176
178
180
182
Stator
184
High / Overrun Drum
B
230
232
234
236
238
240
High Clutch
Hub
Hub w/Sun Gear
242
244
246
248
250
Front Planet
Rear
Sun
Gear
Rear
Planet
252 254
256
258
260
Rear Ring
Gear
C
330
332
334
336
338
340
342
344
346
348
350
352
354
356
Low / Rev. Clutch
Rear
Support
D
440
442
444
446
448 449
450
452
454
456
458
460
Transfer Drum
Duty
Valve
Ext. Hsg.
436
E
Park Pawl
Linkage
Cooler Lines

ILL.		Qty.	Year	Part #	Ref. #
MASTER OVERHAUL KITS (WITH STEELS)					
N.I.	R4AX-EL, All 1987-5/95 Exc. Legacy, Legacy Turbo, Impreza & SVX	1	87-E95	23006	N.L.
N.I.	R4AX-EL, All 6/1995-98 Exc. Legacy, Legacy Turbo, Impreza & SVX	1	L95-98	23006D	N.L.
N.I.	R4AX-EL, Legacy (Turbo)	1	90-94	23006B	N.L.
N.I.	R4AX-EL, Legacy (1/90-92 Also Sell 5-23118A, 5-23138A)	1	87-92	23006	N.L.
N.I.	R4AX-EL, Legacy (93-5/95)	1	93-95	23006C	N.L.
N.I.	R4AX-EL, Legacy (6/95-98) (2.5L DOHC)	1	95-98	23006D	N.L.
N.I.	R4AX-EL, Impreza	1	93-97	23006C	N.L.
N.I.	R4AX-EL, SVX (1/95-97 Also Sell 6-73108A, 6-73128)	1	92-97	23006B	N.L.
N.I.	4EAT (Spin On Filter)	1	99-Up	23006E	N.L.
MASTER OVERHAUL KITS (LESS STEELS)					
N.I.	R4AX-EL, All 1987-5/95 Exc. Legacy, Legacy Turbo, Impreza & SVX	1	87-E95	23004	N.L.
N.I.	R4AX-EL, All 6/1995-98 Exc. Legacy, Legacy Turbo, Impreza & SVX	1	L95-98	23004D	N.L.
N.I.	R4AX-EL, Legacy (Turbo)	1	90-94	23004B	N.L.
N.I.	R4AX-EL, Legacy (1/90-92 Also Sell 5-23118A, 5-23138A)	1	87-92	23004	N.L.
N.I.	R4AX-EL, Legacy (93-5/95)	1	93-95	23004C	N.L.
N.I.	R4AX-EL, Legacy (6/95-98) (2.5L DOHC)	1	95-98	23004D	N.L.
N.I.	R4AX-EL, Impreza	1	93-97	23004C	N.L.
N.I.	R4AX-EL, SVX (1/95-97 Also Sell 6-73108A, 6-73128)	1	92-97	23004B	N.L.
N.I.	4EAT (Spin On Filter)	1	99-Up	23004E	N.L.
OVERHAUL KITS (WITH RINGS AND SEALS)					
N.I.	R4AX-EL	1	87-98	23002	N.L.
N.I.	4EAT	1	99-Up	23002A	N.L.
BONDED PISTONS					
N.I.	Piston Kit (excludes low/reverse piston)	1	99-Up	23960K	N.L.
420D	Piston, Low/Reverse (.600" Tall) (2.0L Turbo, 3.0) Bonded	1	00-Up	23967C	31643-AA190
420D	Piston, Low/Reverse (.725" Tall) (2.5L) Bonded	1	99-Up	23967B	31643-AA180
420D	Piston, Low/Reverse (.850" Tall) (2.5L) Bonded	1	99-Up	23967A	31643-AA170
448D	Piston, Transfer Clutch (Bonded)	1	99-Up	23968A	33143-AA080
N.I.	Retainer, Transfer Clutch (Bonded)	1	87-98	23968	33283-AA000
N.I.	Retainer, Transfer Clutch (Bonded)	1	99-Up	23968AB	33283-AA010
N.I.	Retainer, High Clutch (Bonded)	1	99-Up	23965	31544-AA000
N.I.	Retainer, Low Clutch (Bonded)	1	99-Up	23964	31544-AA010
GASKETS & O-RINGS					
508E	Gasket, Bottom Pan	1	87-98	23300	31397-AA040
508E	Gasket, Bottom Pan	1	99-Up	23300B	N.L.
METAL CLAD SEALS					
100A	Front	1	87-Up	23070A	8067-50050
108A	Axle, Right	1	87-03	13076A	8067-30031
108A	Axle, Right	1	04-Up	23076	8067-35230
130A	Tube Seal, Pump Plate to Differential Housing	1	87-Up	23095	31295-AA003
180A	Pinion	2	87-Up	23096	8067-52010
212B	Axle, Left	1	87-03	13077A	8067-30032
212B	Axle, Left	1	04-Up	23077	8067-35240
504E	Linkage	1	87-Up	23072	8067-16040
556E	Rear (4wd Extension Housing)	1	87-Up	53074	31336-X0101
SEALING RINGS & KITS					
N.I.	Ring Kit	1	87-98	23175K	N.L.
FRICTION PLATES					
218B	Reverse (.079") (34T)	2	87-91	93110A	31532-AA030
218B	Reverse (.079") (30T)	2	92-96	73110AA	31532-41X19
218B	Reverse (.079") (38T) (3/97-98)	2	97-98	23110	31532-AA140
218B	Reverse (.063") (30T)	2	99-Up	23110A	31532-AA180
232B	High (30T)	4-5	87-98	93106B	31532-AA050
232B	High (36T)	5	99-Up	23106	31532-AA150
312C	Low	6	99-Up	23108	31532-AA170
312C	Forward (.063")	5	96-98	73108A	31532-AA110
312C	Forward (.079")	5-6	87-95	73108	31532-AA060
320C	Overrun	3	87-98	73116	31532-AA070
400D	Low/ Reverse (.079")	6	87-94	73114	31662-AA050

ILL.		Qty.	Year	Part #	Ref. #
FRICTION PLATES (Cont.)					
400D	Low/ Reverse (.063")	7-8	89-Up	23114A	31662-AA060
400D	Low/ Reverse (.071")	5-6	92-98	23114B	31662-AA080
440D	Transfer Clutch (.079") (24T) (87-12/89)	5	87-L89	23118	31588-AA020
440D	Transfer Clutch (.071") (24T) (1/90-Up)	5-6	E90-Up	23118A	31588-AA060
440D	Transfer Clutch (.071") (50T) (Some)	AR	01-Up	23118B	N.L.
N.I.	2-4 Brake	3	99-Up	23104	31532-AA131
STEEL PLATES					
216B	Reverse (.063") (32T)	2	99-Up	23130	31536-AA190
216B	Reverse (.078") (30T) 5.050" ID	2	93-98	73130B	31536-AA100
216B	Reverse (.078") (30T) 5.355" ID	2	87-92	93130A	31536-AA000
234B	High (.078") (8T)	4	99-Up	23126E	31536-AA220
234B	High (.078") (24T)	1-5	97-98	23126C	31536-AA170
234B	High (.078") (27T)	1-5	89-98	93126BA	31536-41X03
234B	High (.108") (27T)	1-5	91-98	23126B	31536-AA070
234B	High (.118") (24T)	3	97-98	23126D	31536-AA160
234B	High (.118") (27T)	3	87-98	93126B	31536-AA030
314C	Low	5-6	99-Up	23128	31536-AA200
314C	Forward (.071")	5	95-98	73128	31536-41X13
314C	Forward (.078")	5-6	87-98	73128A	31536-AA080
322C	Overrun	3	87-98	73136	31536-AA090
402D	Low/ Reverse (.078")	6	87-98	73134	31666-AA020
402D	Low/ Reverse (.051")	AR	87-98	73134A	N.L.
402D	Low/ Reverse (.071")	6-8	91-98	23134B	31666-AA030
402D	Low/ Reverse (.063")	4-7	93-Up	23134C	31666-AA060
442D	Transfer Clutch (.071")	5	87-98	23138	31589-AA030
442D	Transfer Clutch (.063")	4-6	91-Up	23138A	31589-AA041
N.I.	2-4 Brake	2	99-Up	23124	31536-AA142
PRESSURE PLATES					
236B	High Clutch 3.6mm	1	87-98	73146A	31537-41X61
236B	High Clutch 4.0mm	1	87-98	73146AB	31567-41X63
FILTERS					
506E	R4AX-EL w/ 1/8" Pick-up Tube	1	87-91	23010	31728-AA000
506E	R4AX-EL w/ 1/2" Pick-up Tube	1	91-98	23010A	31728-AA010
506E	4EAT (19 Bolts)	1	99-Up	23010B	31728-AA050
506E	4EAT (3 Bolts)	1	05-Up	23010C	31728-AA130
N.I.	4EAT Cooler Return (Spin-On)	1	99-Up	23013	38325-KA000
FILTER KITS					
N.I.	R4AX-EL w/ 1/8" Pick-up Tube	1	87-91	23011	N.L.
N.I.	R4AX-EL w/ 1/2" Pick-up Tube	1	90-98	23011A	N.L.
N.I.	4EAT (19 Bolts)	1	99-Up	23011BF	N.L.
N.I.	4EAT (3 Bolts)	1	05-Up	23011C	N.L.
BANDS					
198A	Overdrive	1	87-98	73020	31630-AA010
BUSHINGS					
N.I.	Bushing Kit, R4AX-EL	1	87-98	23030	N.L.
N.I.	Bushing Kit, 4EAT	1	99-Up	23030B	N.L.
102A	Converter Housing (To Converter Hub)	1	87-98	23031	N.L.
THRUST WASHERS/BEARINGS					
WASHERS					
195A	Stator to Reverse Drum .035"	1	87-98	93211A	31528-21X01
195A	Stator to Reverse Drum .051"	1	87-98	93211C	31528-21X03
195A	Stator to Reverse Drum .067"	1	87-98	93211E	31528-21X05
300C	Rear Planet Ring Gear to Clutch Hub	1	87-98	73254	31508-41X01
ELECTRICAL COMPONENTS					
500E	Harness, Internal w/ TOT	1	05-Up	23446C	N.L.
514E	Solenoid, Lock-Up (TCC)	1	87-98	23425	31939-AA020
514E	Solenoid, Lock-up (TCC) (Blue Connector)	1	99-04	23425A	31939-AA080

ILL.		Qty.	Year	Part #	Ref. #
ELECTRICAL COMPONENTS (Cont.)					
514E	Solenoid, Lock-up Duty (TCC) (Gray Connector)	1	05-Up	23432D	N.L.
516E	Solenoid Assembly (4 Solenoids) (1st Design)	1	87-98	23420	31939-AA000
N.I.	Solenoid Assembly (7 Solenoids) (2nd Design)	1	99-04	23420B	N.L.
N.I.	Solenoid Assembly (7 Solenoids) (3rd Design)	1	05-Up	23420C	N.L.
N.I.	Solenoid, #1 Shift (Green Connector)	1	99-04	23421B	31939-AA110
N.I.	Solenoid, #2 Shift (Yellow Connector)	1	99-04	23422B	31939-AA180
N.I.	Solenoid, Linear (Line Pressure Control)	1	05-Up	23431C	N.L.
N.I.	Solenoid, EPC (Red/ Pink Connector)	1	99-04	23431A	31939-AA160
N.I.	Solenoid, 2-4 Brake Duty (Red/ Pink Connector)	1	99-04	23431A	31939-AA160
N.I.	Solenoid, 2-4 Brake Duty (Brown Connector)	1	05-Up	23432E	N.L.
N.I.	Solenoid, 2-4 Brake Timing (Black Connector)	1	99-04	23432B	31939-AA101
N.I.	Solenoid, High Clutch Duty (Gray Connector)	1	05-Up	23432D	N.L.
N.I.	Solenoid, Low Clutch Timing (Gray Connector)	1	99-04	23432C	31939-AA091
N.I.	Solenoid, Low Clutch Duty (Brown Connector)	1	05-Up	23432E	N.L.
N.I.	Solenoid, Low/ Reverse Duty (Gray Connector)	1	05-Up	23432D	N.L.
N.I.	Solenoid, Transfer Clutch Duty (2.160" Tall Body)	1	87-E95	23433	31942-AA061
N.I.	Solenoid, Transfer Clutch Duty (2.460" Tall Body)	1	L95-98	23433B	31942-AA090
N.I.	Solenoid, Transfer Clutch Duty & VB (10/98-6/03)	1	L98-03	23433A	31942-AA103
N.I.	Solenoid, Transfer Clutch Duty & VB (7/03-4/06)	1	03-E06	23433C	31942-AA130
N.I.	Solenoid, Transfer Clutch Duty (On VB) (05-Up)	1	05-Up	23433E	N.L.
VALVE BODY RECALIBRATION KITS					
N.I.	Valve Body Kit (4EAT)	1	99-07	23165E	N.L.
DRUMS & COMPONENTS					
202B	Reverse	1	99-Up	23556	N.L.
202B	Reverse	1	87-98	73556	31511-41X04
222B	High (30T Reverse Hub)	1	87-98	73555A	N.L.
222B	High (34T Reverse Hub)	1	87-98	93555	31541-21X01
332C	Forward Drum	1	87-98	73554A	31571-41X26
420D	Piston, Low/Reverse (.600" Tall) (2.0L Turbo, 3.0) Bonded	1	00-Up	23967C	31643-AA190
420D	Piston, Low/Reverse (.725" Tall) (2.5L) Bonded	1	99-Up	23967B	31643-AA180
420D	Piston, Low/Reverse (.850" Tall) (2.5L) Bonded	1	99-Up	23967A	31643-AA170
448D	Piston, Transfer Clutch (Bonded)	1	99-Up	23968A	33143-AA080
N.I.	Low Drum	1	99-Up	23554	N.L.
N.I.	Retainer, Transfer Clutch (Bonded)	1	87-98	23968	33283-AA000
N.I.	Retainer, Transfer Clutch (Bonded)	1	99-Up	23968AB	33283-AA010
N.I.	Retainer, High Clutch (Bonded)	1	99-Up	23965	31544-AA000
N.I.	Retainer, Low Clutch (Bonded)	1	99-Up	23964	31544-AA010
PLANETS AND COMPONENTS					
N.I.	Planet Kit (37T Rear Sun Gear)	1	87-98	73583	N.L.
N.I.	Planet Kit (42T Rear Sun Gear)	1	87-98	73583B	N.L.
N.I.	Planet Kit	1	99-Up	23583B	N.L.
ONE WAY CLUTCHES					
304C	Sprag, Input (28 Elements)	1	87-98	73656	31484-41X00
338C	Sprag, Low (30 Elements)	1	93-98	73658A	31473-41X02
VALVE BODIES & GOVERNORS					
518E	Valve Body (5 Solenoids)	1	87-98	23740-1	N.L.
518E	Valve Body (7 Solenoids, Plug Style TOT)	1	98-00	23740-5	N.L.
518E	Valve Body (7 Solenoids, Wire Style TOT)	1	01-Up	23740-6	N.L.
MISCELLANEOUS COMPONENTS					
214B	Reverse Dished Plate w/Tangs	1	87-98	93854A	N.L.
TECHNICAL MANUALS					
N.I.	Tech Manual	1	87-98	23400	N.L.
N.I.	Tech Manual, Diagnostic Guide Phase 2	1	99-Up	23400ET	N.L.

AWD
4 SPEED
ILL#'s refer to R4AX-EL

R4AX-EL, 4EAT

Notes

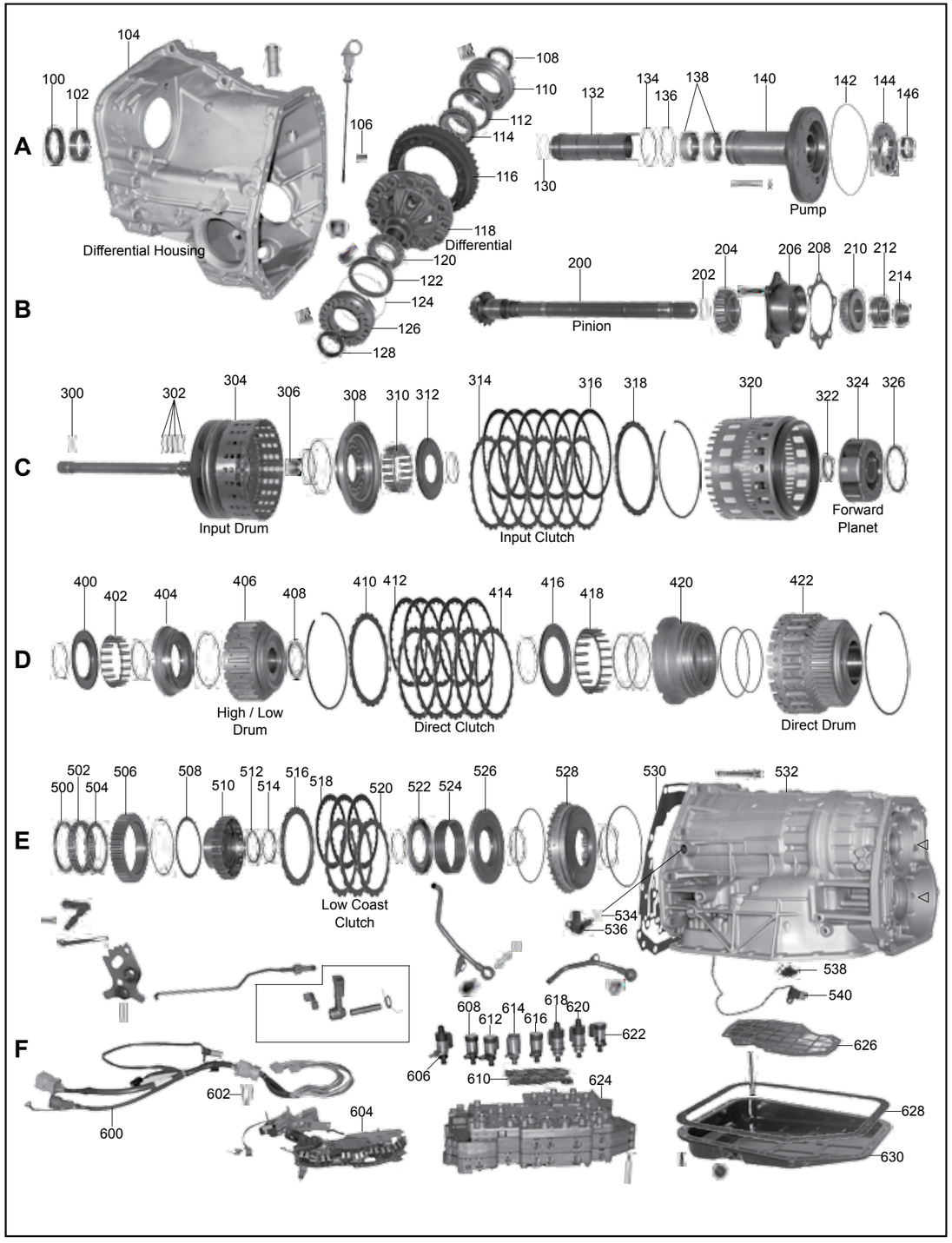
A
B
C
D
E
F
Differential Housing
Differential
Pump
Pinion
Input Drum
Input Clutch
Forward Planet
High / Low Drum
Direct Clutch
Direct Drum
Low Coast Clutch

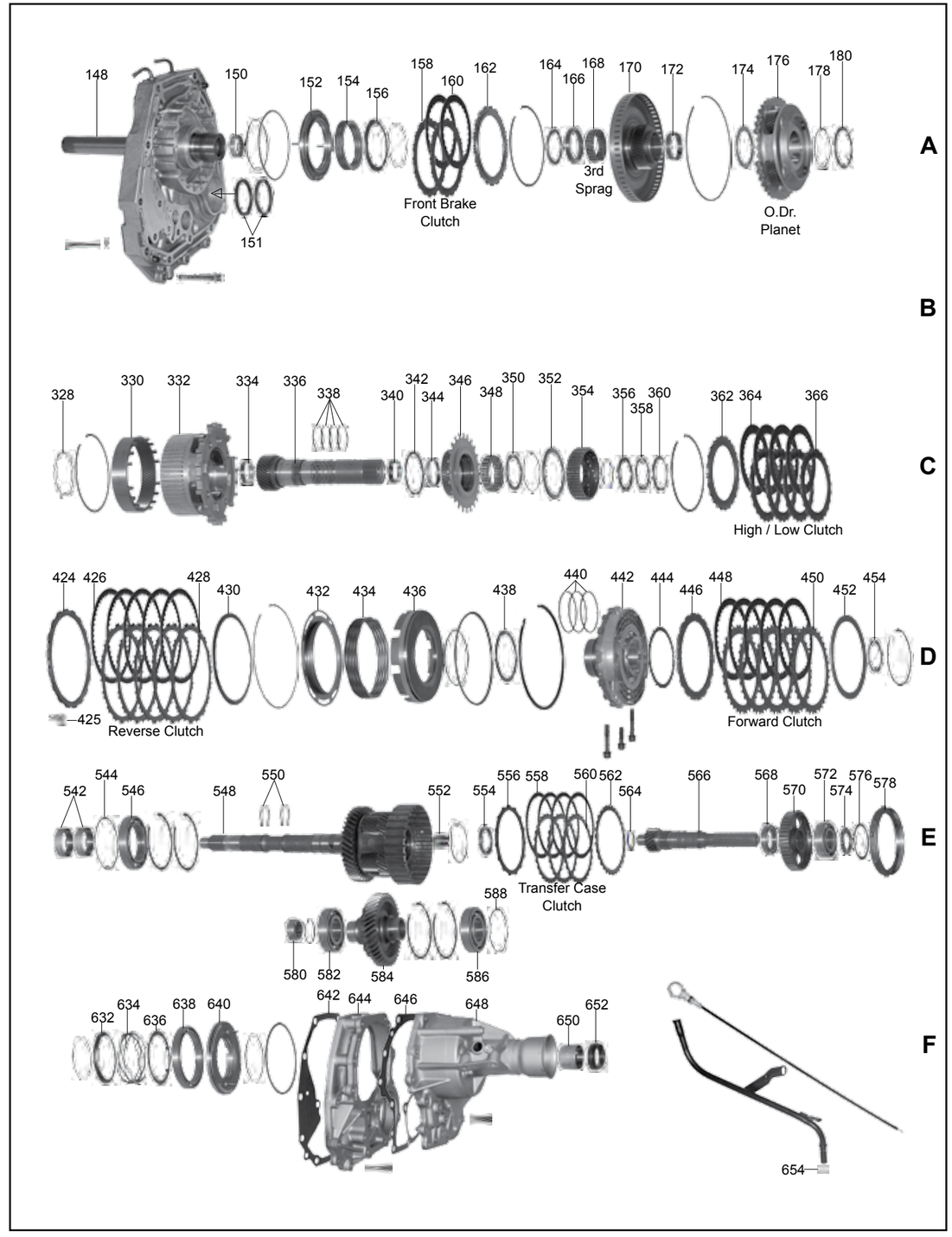
A
B
C
D
E
F
Front Brake Clutch
3rd Sprag
O.Dr. Planet
High / Low Clutch
Reverse Clutch
Forward Clutch
Transfer Case Clutch

ILL.		Qty.	Year	Part #	Ref. #
MASTER OVERHAUL KITS (WITH STEELS)					
N.I.	Subaru 5 Speed (5EAT) (w/ Pistons)	1	05-Up	123006B	N.L.
MASTER OVERHAUL KITS (LESS STEELS)					
N.I.	Subaru 5 Speed (5EAT) (w/ Pistons)	1	05-Up	123004B	N.L.
OVERHAUL KITS (WITH RINGS AND SEALS)					
N.I.	Subaru 5 Speed (5EAT) (w/ Pistons)	1	05-Up	123002B	N.L.
BONDED PISTONS					
312C	Retainer, Input Clutch Balance (Bonded)	1	05-Up	173984	N.L.
400D	Retainer, Hi-Low/ Reverse Clutch Balance (Bonded)	1	05-Up	173987	N.L.
416D	Retainer, Direct Clutch Balance (Bonded)	1	05-Up	173985	N.L.
GASKETS & O-RINGS					
628F	Gasket, Pan	1	05-Up	123300B	N.L.
METAL CLAD SEALS					
100A	Front	1	05-Up	23070A	N.L.
108A	Axle, Right	1	05-Up	23076	N.L.
128A	Axle, Left	1	05-Up	23077	N.L.
151A	Pinion	2	05-Up	23096	N.L.
652F	Rear (4wd Extension Housing)	1	05-Up	53074	N.L.
N.I.	Shift Lever	1	05-Up	23072	N.L.
SEALING RINGS & KITS					
N.I.	Ring Kit	1	05-Up	123175BK	N.L.
FRICTION PLATES					
160A	Front Brake	2	05-Up	123104	N.L.
316C	Input	5	05-Up	173100	N.L.
364C	High & Low/ Reverse	4	05-Up	173114	N.L.
412D	Direct	5	05-Up	173106	N.L.
426D	Reverse	5	05-Up	173110	N.L.
448D	Forward	4	05-Up	173108	N.L.
518E	Low Coast	3	05-Up	173112	N.L.
558E	Transfer	3	05-Up	173118B	N.L.
STEEL PLATES					
158A	Front Brake	2	05-Up	123124	N.L.
314C	Input	5	05-Up	173120	N.L.
366C	High & Low/ Reverse	4	05-Up	173134	N.L.
414D	Direct	5	05-Up	173126	N.L.
428D	Reverse	5	05-Up	173130	N.L.
450D	Forward	4	05-Up	173128	N.L.
520E	Low Coast	3	05-Up	173132	N.L.
560E	Transfer	3	05-Up	173138A	31589-AA041
FILTERS					
626F	Filter	1	05-Up	123010B	N.L.
FILTER KITS					
N.I.	Filter Kit	1	05-Up	123011B	N.L.
BUSHINGS					
N.I.	Bushing Kit	1	05-Up	123030B	N.L.
ELECTRICAL COMPONENTS					
606F	Solenoid w/ Cap (Direct, Input, High-L/R)	3	05-Up	173425C	N.L.
608F	Solenoid w/ Flat Top (Front Brake, Transfer Clutch, TCC, Line Pressure)	4	05-Up	173421C	N.L.
622F	Solenoid (Low Coast Brake)	1	05-Up	173431C	N.L.
PUMPS					
140A	Pump Body	1	05-Up	123510B	N.L.

ILL.		Qty.	Year	Part #	Ref. #
PUMP COMPONENTS					
144A	Pump Gears (4 Slots) (9T Inner Gear)	1	05-Up	123530B	N.L.
148A	Pump Cover	1	05-Up	123520B	N.L.
DRUMS & COMPONENTS					
304C	Drum, Input w/ Shaft (14.400" Long)	1	05-Up	123554B	N.L.
312C	Retainer, Input Clutch Balance (Bonded)	1	05-Up	173984	N.L.
354C	Hub, Hi/Lo	1	05-Up	123577B	N.L.
400D	Retainer, Hi-Low/ Reverse Clutch Balance (Bonded)	1	05-Up	173987	N.L.
406D	Drum, Hi/Lo	1	05-Up	123557B	N.L.
416D	Retainer, Direct Clutch Balance (Bonded)	1	05-Up	173985	N.L.
422D	Drum, Direct	1	05-Up	123555B	N.L.
510E	Hub, Low Coast	1	05-Up	123579B	N.L.
PLANETS AND COMPONENTS					
176A	Planet, Front	1	05-Up	123582B	N.L.
320C	Ring Gear, Rear	1	05-Up	123594B	N.L.
324C	Planet, Center	1	05-Up	123580B	N.L.
330C	Ring Gear, Center Planet	1	05-Up	123590B	N.L.
332C	Planet, Rear	1	05-Up	123584B	N.L.
548E	Planet, Transfer	1	05-Up	123586B	N.L.
SUN GEARS					
170A	Sun Gear Drum, Overdrive	1	05-Up	123616B	N.L.
336C	Sun Gear, Center	1	05-Up	123610B	N.L.
346C	Sun Gear, Rear	1	05-Up	123614B	N.L.
ONE WAY CLUTCHES					
168A	Sprag, 3rd	1	05-Up	123656B	N.L.
348C	Sprag, 1st	1	05-Up	173654B	N.L.
502E	Sprag, Forward	1	05-Up	173658B	N.L.
SHELLS & SUPPORTS					
442D	Center Support	1	05-Up	123630B	N.L.
SHAFTS					
566E	Output Shaft	1	05-Up	123678B	N.L.
VALVE BODIES & GOVERNORS					
624F	Valve Body (8 Solenoids)	1	05-Up	123740B	N.L.
CASES/HOUSINGS & COMPONENTS					
104A	Bell Housing	1	05-Up	123750B	N.L.
532E	Case	1	05-Up	123760B	N.L.
630F	Pan, Bottom	1	05-Up	123765B	N.L.
648F	Extension Housing	1	05-Up	123770B	N.L.

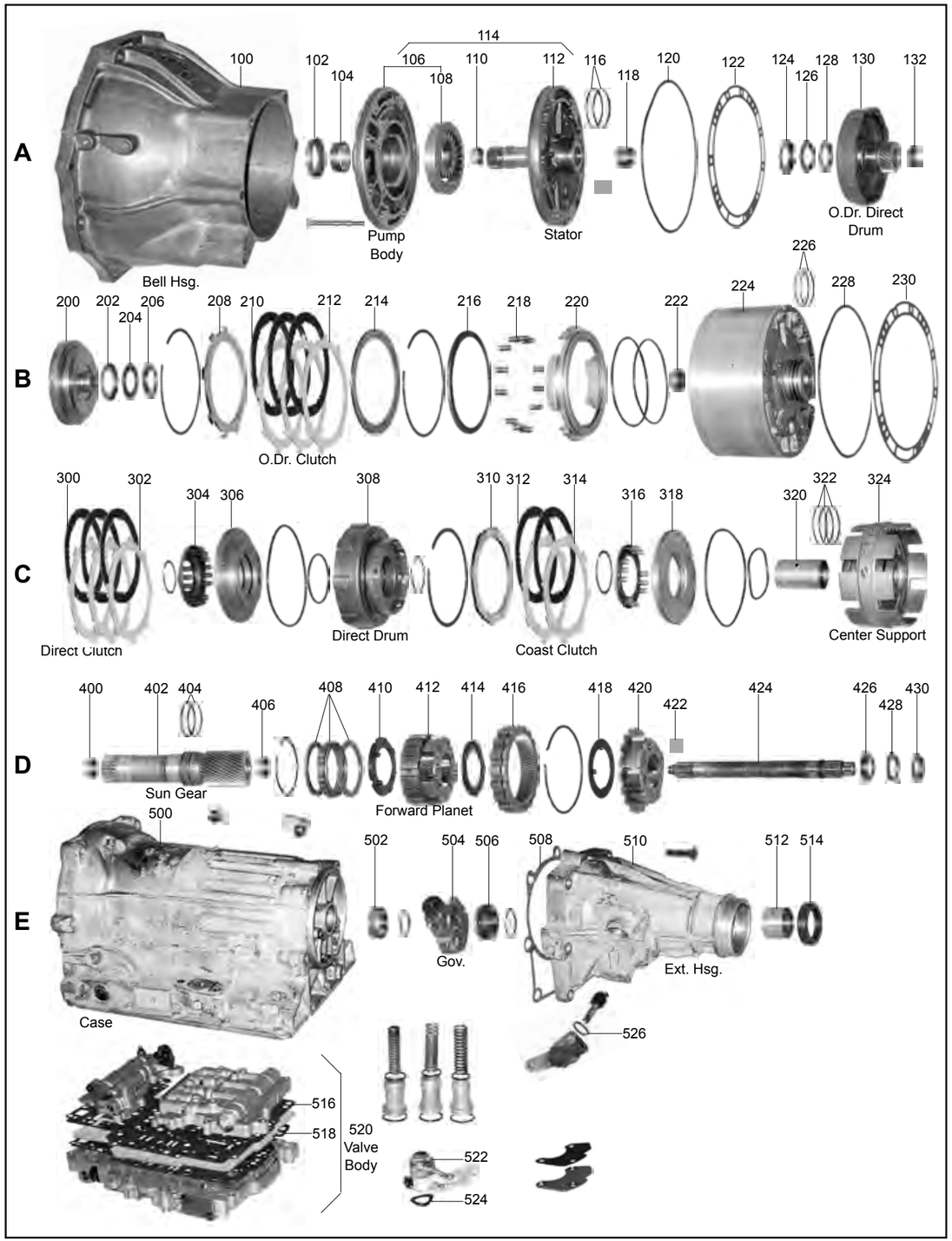
A
100
102
104
106
108
110
112
114
116
118
120
122
124
126
128
130
132
Bell Hsg.
Pump Body
Stator
O.Dr. Direct Drum
B
200
202
204
206
208
210
212
214
216
218
220
222
224
226
228
230
O.Dr. Clutch
C
300
302
304
306
308
310
312
314
316
318
320
322
324
Direct Clutch
Direct Drum
Coast Clutch
Center Support
D
400
402
404
406
408
410
412
414
416
418
420
422
424
426
428
430
Sun Gear
Forward Planet
E
500
502
504
506
508
510
512
514
Case
Gov.
Ext. Hsg.
526
516
518
520
Valve Body
522
524

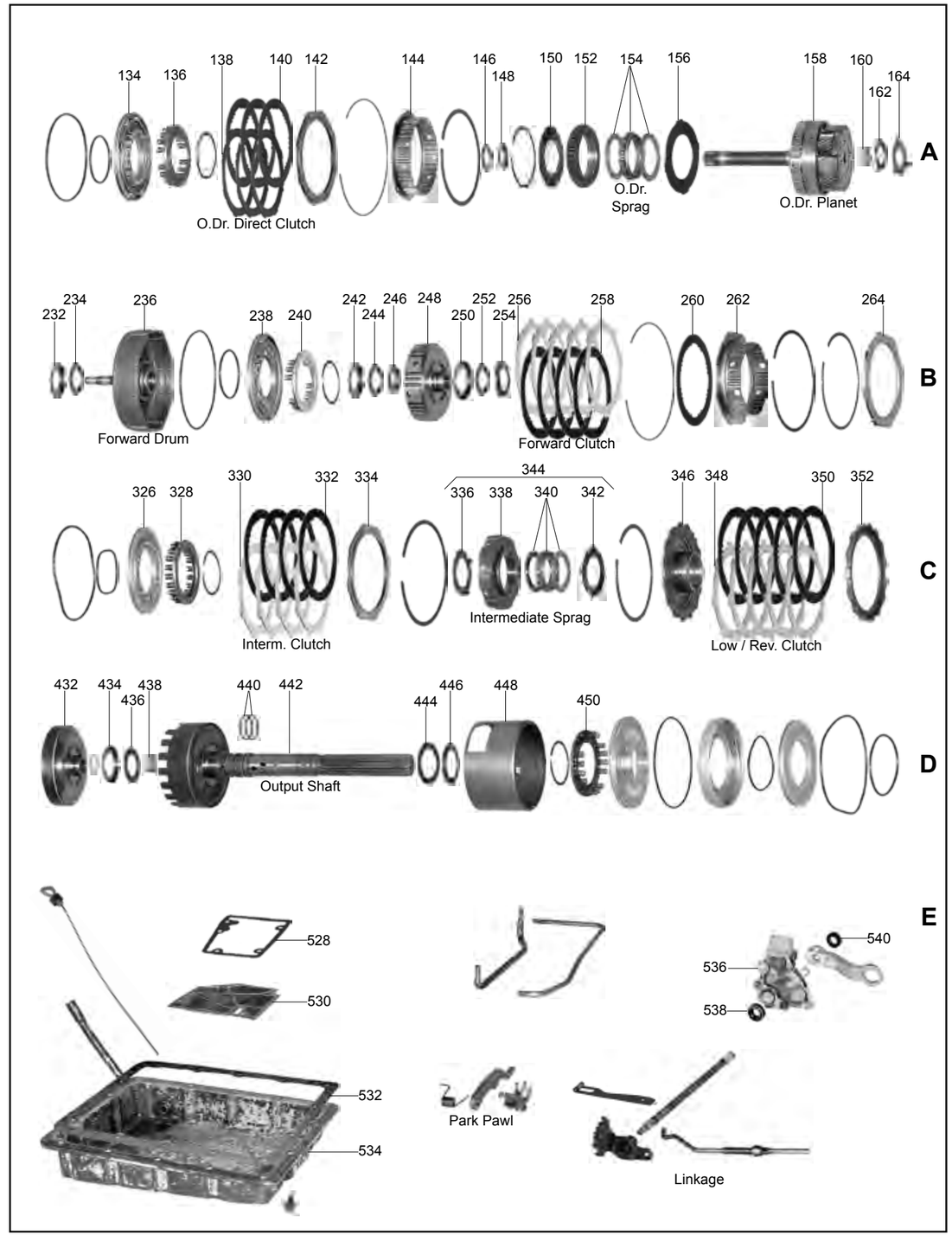
A
134
136
138
140
142
144
146
148
150
152
154
156
158
160
162
164
O.Dr. Direct Clutch
O.Dr. Sprag
O.Dr. Planet
B
232
234
236
238
240
242
244
246
248
250
252
254
256
258
260
262
264
Forward Drum
Forward Clutch
C
326
328
330
332
334
336
338
340
342
344
346
348
350
352
Interm. Clutch
Intermediate Sprag
Low / Rev. Clutch
D
432
434
436
438
440
442
444
446
448
450
Output Shaft
E
528
530
532
534
536
538
540
Park Pawl
Linkage

ILL.		Qty.	Year	Part #	Ref. #
MASTER OVERHAUL KITS (WITH STEELS)					
N.I.	A40, A41, A43	1	73-Up	57006A	N.L.
N.I.	A40D, A42D, A43D, A44D	1	76-Up	57006CC	N.L.
N.I.	A42DE, A42DL, A43DE, A43DL, A44DE, A44DL, A45DL	1	L81-Up	57006HC	N.L.
N.I.	A46DE, A46DF	1	90-95	57006P	N.L.
N.I.	AW55	1	73-Up	57006A	N.L.
N.I.	AW70, AW71, AW72 (Non Lock-up)	1	76-Up	57006CC	N.L.
N.I.	AW70L, AW71L, AW72L (Lock-up) (8/81-Up)	1	L81-Up	57006HC	N.L.
N.I.	BW55 (Volvo)	1	74-81	57006Y	N.L.
MASTER OVERHAUL KITS (LESS STEELS)					
N.I.	A40, A41, A43	1	73-Up	57004A	N.L.
N.I.	A40D, A42D, A43D, A44D	1	76-Up	57004CC	N.L.
N.I.	A42DE, A42DL, A43DE, A43DL, A44DE, A44DL, A45DL	1	L81-Up	57004HC	N.L.
N.I.	A46DE, A46DF	1	90-95	57004P	N.L.
N.I.	AW55	1	73-Up	57004A	N.L.
N.I.	AW70, AW71, AW72 (Non Lock-up)	1	76-Up	57004CC	N.L.
N.I.	AW70L, AW71L, AW72L (Lock-up) (8/81-Up)	1	L81-Up	57004HC	N.L.
N.I.	BW55 (Volvo)	1	74-81	57004Y	N.L.
OVERHAUL KITS (WITH RINGS AND SEALS)					
N.I.	A40, A41, A43	1	73-Up	57002A	N.L.
N.I.	A40D, A42D, A43D, A44D	1	76-Up	57002CC	N.L.
N.I.	A42DE, A42DL, A43DE, A43DL, A44DE, A44DL, A45DL (8/81-Up)	1	L81-Up	57002EC	N.L.
N.I.	A46DE, A46DF	1	90-95	57002EC	N.L.
N.I.	AW55	1	73-Up	57002A	N.L.
N.I.	AW70, AW71, AW72 (Non Lock-up)	1	76-Up	57002CC	N.L.
N.I.	AW70L, AW71L, AW72L (Lock-up) (8/81-Up)	1	L81-Up	57002EC	N.L.
N.I.	BW55 (Volvo)	1	74-81	57002Y	N.L.
GASKETS & O-RINGS					
120A	D-Ring, Pump (D Ring)	1	73-79	57311A	35147-22010
120A	O-Ring, Pump (O Ring)	1	79-Up	57311AA	90301-99010
228B	O-Ring, Overdrive Housing to Case	1	73-Up	57311C	90301-99054
508E	Gasket, Extension Housing	1	73-Up	57305A	35182-22010
528E	Filter Gasket, A40, A41, A43, BW55	1	73-Up	57326A	04550-45007P
528E	Filter Gasket, A40D	1	73-Up	57326C	35339-30030
528E	Filter Gasket, A42D	1	73-Up	57326D	35339-30050
528E	Filter Gasket, A42DL, A43DL	1	73-Up	57326E	35339-14010
528E	Filter Gasket, A43DE	1	73-Up	57326H	35339-30060
532E	Gasket, Bottom Pan	1	73-Up	57300A	35168-22010
METAL CLAD SEALS					
102A	Front	1	73-Up	57070A	90311-38029
514E	Rear (38mm x 58mm x 11mm) A40, A41, A43 (Toyota)	1	73-Up	57074A	90311-38040
514E	Rear (35mm x 49.2mm x 11mm) A40D, A42D, A43D (Isuzu)	1	81-85	57074AD	5-09625-009-0
514E	Rear (38.0mm x 58.0mm x 11mm) (Mazda)	1	86-Up	57074A	90311-38040
514E	Rear (38.5mm x 49.2mm x 8mm) A42D, A42DL, AW71 (Isuzu)	1	86-Up	57074D	8-94155-673-0
514E	Rear (39.5mm x 57.1mm x 13.2mm) A44D, A44DL (Mitsubishi)	1	73-Up	57074J	MD951482
514E	Rear (36mm x 49.5mm x 11mm) AW55, BW55, AW70-72 (Volvo)	1	73-Up	29074	235728-3
SEALING RINGS & KITS					
N.I.	Ring Kit, A40, A41, A43, AW55, BW55	1	73-Up	57175AK	N.L.
N.I.	Ring Kit, A40D to A46DE	1	76-Up	57175CK	N.L.
N.I.	Ring Kit, A42D to A45DL	1	82-Up	57175HK	K57901C
FRICTION PLATES					
140A	Overdrive (Direct)	1	73-Up	57102AA	35677-30030
210B	Overdrive Brake (.067") (33T)	3	82-Up	67100A	35677-30040
210B	Overdrive Brake (.091") (24T)	3	73-Up	57102AA	35677-30030
210B	Overdrive Brake (.091") (44T)	3	79-81	57102B	35677-30010
258B	Forward (.079")	3-4	81-97	57102A	35677-22060
258B	Forward (.091")	3-4	73-Up	57102AA	35677-30030
300C	Direct	3-4	73-Up	57102AA	35677-30030
312C	Intermediate Overrun (Brake #1)	1-3	73-Up	57102AA	35677-30030
332C	Intermediate (Brake #2) (.091")	2-3	73-Up	57102AA	35677-30030

ILL.		Qty.	Year	Part #	Ref. #
FRICTION PLATES (Cont.)					
332C	Intermediate (Brake #2) (.079")	2-3	85-Up	57102A	35677-22060
350C	Low/ Reverse (Brake #3) (16T)	4-5	73-Up	57114A	25633-22030
STEEL PLATES					
138A	Overdrive (Direct) (.071")	1-2	77-Up	57122AA	35634-22040
138A	Overdrive (Direct) (.079")	1	88-97	57122A	35634-30070
212B	Overdrive Brake (.071") (8 Short Teeth)	2-3	77-Up	57122AA	35634-22040
212B	Overdrive Brake (.071") (8 Long Teeth)	4	81-97	57124AA	35634-22060
212B	Overdrive Brake (.078") (7T)	2-3	81-Up	57124D	35634-30080
212B	Overdrive Brake (.091") (7T)	1-3	84-Up	57124E	35634-30010
256B	Forward (.055")	1-4	81-Up	57122AB	35634-30090
256B	Forward (.071")	3-4	73-Up	57122AA	35634-22040
256B	Forward (.078")	3-4	80-Up	57122A	35634-30070
256B	Forward (.091")	AR	73-Up	57122QA	35634-30120
302C	Direct (.071")	2-3	73-Up	57122AA	35634-22040
302C	Direct (.078")	3-4	80-Up	57122A	35634-30070
302C	Direct (.091")	2	73-Up	57122QA	35634-30120
314C	Overrun (Brake # 1) (.071") (8 Long Teeth)	1-3	73-Up	57124AA	35634-22060
314C	Overrun (Brake # 1) (.078") (8 Short Teeth)	1-3	73-Up	57124A	35648-30010
330C	Intermediate (Brake # 2) (.071") (8 Long Teeth)	2-4	73-Up	57124AA	35634-22060
330C	Intermediate (Brake # 2) (.078") (8 Short Teeth)	1-3	80-Up	57124A	35648-30010
330C	Intermediate (Brake # 2) (.091") (8T)	3	74-Up	57124B	35648-30020
330C	Intermediate (Brake # 2) (.118") (8T)	2	85-Up	57124C	35648-22010
348C	Low/ Reverse (Brake # 3) (Exc. A46DE, DF)	4-5	73-Up	57134A	35634-22050
348C	Low/ Reverse (Brake # 3) (A46DE, DF)	4	73-Up	57134Q	35647-22010
FILTERS					
530E	A40, A41, A43, AW55, BW55	1	73-Up	57010A	35303-22020
530E	A40D	1	76-Up	57010C	35303-30031
530E	A42D, A43D, A44D, AW70, AW71, AW72	1	76-Up	57010D	35303-30050
530E	A42DL, A43DL, A44DL, A45DL, A45DF (8/81-Up)	1	L81-Up	57010E	35303-14010
530E	A43DE, A44DE, A46DE	1	83-Up	57010H	35383-30080
FILTER KITS					
N.I.	A40, A41, A43, AW55, BW55	1	73-Up	57011A	N.L.
N.I.	A40D	1	76-Up	57011C	N.L.
N.I.	A42D, A43D, A44D, AW70, AW71, AW72	1	76-Up	57011D	N.L.
N.I.	A42DL, A43DL, A44DL, A45DL, A45DF (8/81-Up)	1	L81-Up	57011E	N.L.
N.I.	A43DE, A44DE, A46DE	1	83-Up	57011H	N.L.
BUSHINGS					
N.I.	Bushing Kit, A40, A41, A43, AW55	1	73-Up	57030A	N.L.
N.I.	Bushing Kit, A40D, A42D Series, AW70	1	78-Up	57030D	K57902B
N.I.	Bushing Kit, A43D, A44D, A45D, A46D Series, AW71	1	80-Up	57030DA	N.L.
104A	Pump Body	1	73-Up	57034A	N.L.
ELECTRICAL COMPONENTS					
522E	Solenoid, Overdrive A42D, A43D (Mounts on Side of Case)	1	83-Up	57427P	85420-22060
PUMPS					
114A	Pump (2 15/16" Long Stator) (A42DL, 43DE, 43DL, 44DL)	1	81-Up	57500E	N.L.
114A	Pump (3.625" Long Stator) (A43D, 44D)	1	76-Up	57500SA	N.L.
DRUMS & COMPONENTS					
236B	Forward Drum w/ Shaft, A40	1	73-Up	57554A	35701-22011
308C	Direct Drum, A40, A40D, BW55	1	73-Up	57555A	N.L.
308C	Direct Drum, A40D, A43DE, A44D	1	73-Up	57555CA	N.L.
ONE WAY CLUTCHES					
154A	Overdrive (18 Elements)	1	79-81	57652D	35791-30020
154A	Overdrive (20 Elements)	1	81-Up	57650D	35791-30030
154A	Overdrive (22 Elements)	1	87-Up	57650R	35791-28010
344C	Intermediate (18 Elements)	1	73-Up	57652D	35791-30020
408D	Low (3 Speeds)	1	73-81	57654A	35792-22020
408D	Low (4 Speeds Exc. 44DL)	1	81-Up	57654B	35792-30010
408D	Low (4 Speeds 44DL)	1	85-Up	57654J	35792-30030

ILL.		Qty.	Year	Part #	Ref. #
MISCELLANEOUS COMPONENTS					
N.I.	Boost Valve & Sleeve, .404" (A43DE)	1	73-Up	57741FB	N.L.
N.I.	Boost Valve & Sleeve, .445" (A43DE)	1	73-Up	57741	N.L.
TECHNICAL MANUALS					
N.I.	Tech Manual, A40 Series	1	73-Up	57400A	N.L.

Notes

Notes

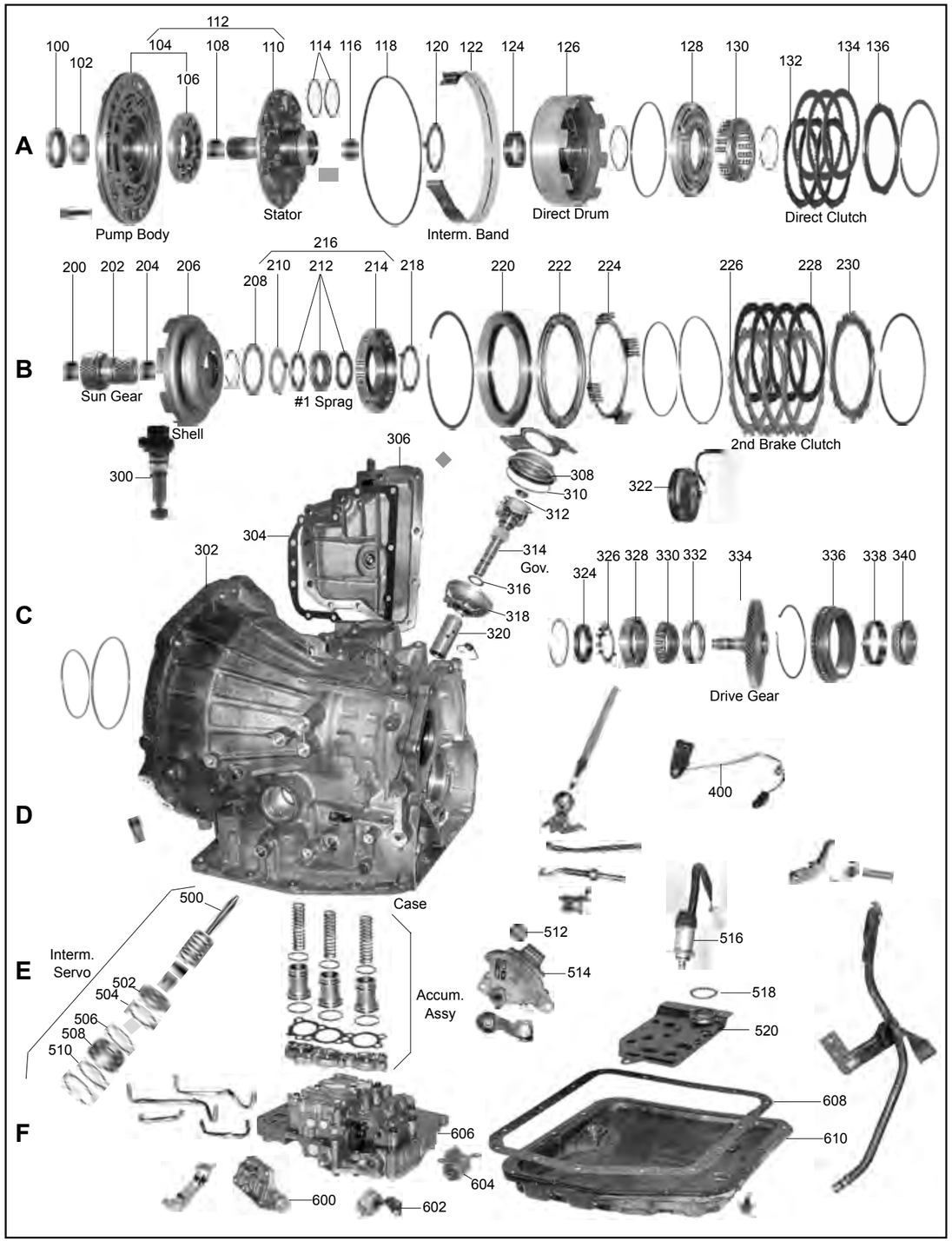
A
B
C
D
E
F
Pump Body
Stator
Interm. Band
Direct Drum
Direct Clutch
Sun Gear
Shell
#1 Sprag
2nd Brake Clutch
Gov.
Drive Gear
Case
Interm. Servo
Accum. Assy

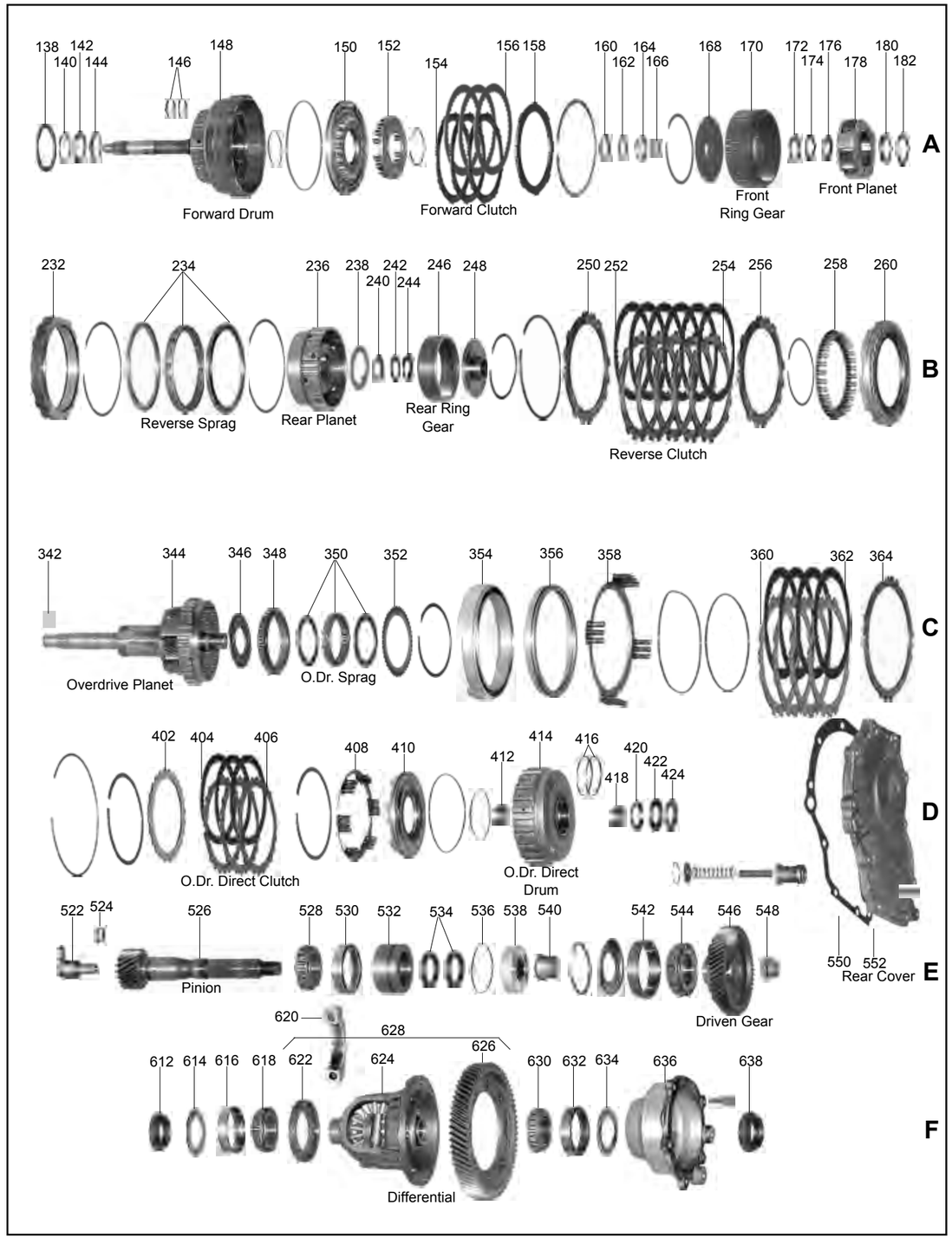
A
B
C
D
E
F
Forward Drum
Forward Clutch
Front Ring Gear
Front Planet
Reverse Sprag
Rear Planet
Rear Ring Gear
Reverse Clutch
Overdrive Planet
O.Dr. Sprag
O.Dr. Direct Clutch
O.Dr. Direct Drum
Pinion
Driven Gear
Rear Cover
Differential

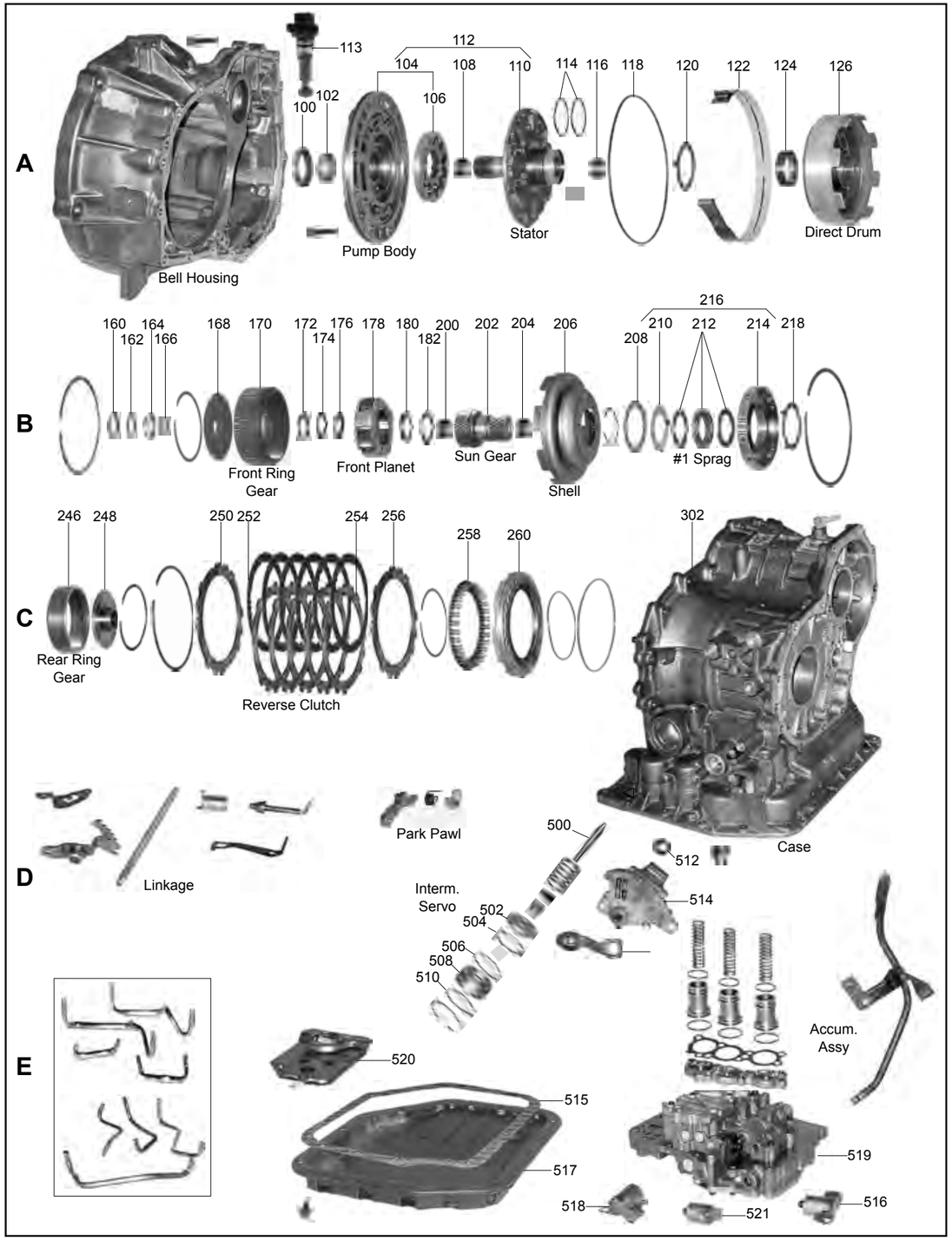
A
B
C
D
E
Bell Housing
Pump Body
Stator
Direct Drum
Front Ring Gear
Front Planet
Sun Gear
Shell
#1 Sprag
Rear Ring Gear
Reverse Clutch
Case
Park Pawl
Linkage
Interm. Servo
Accum. Assy

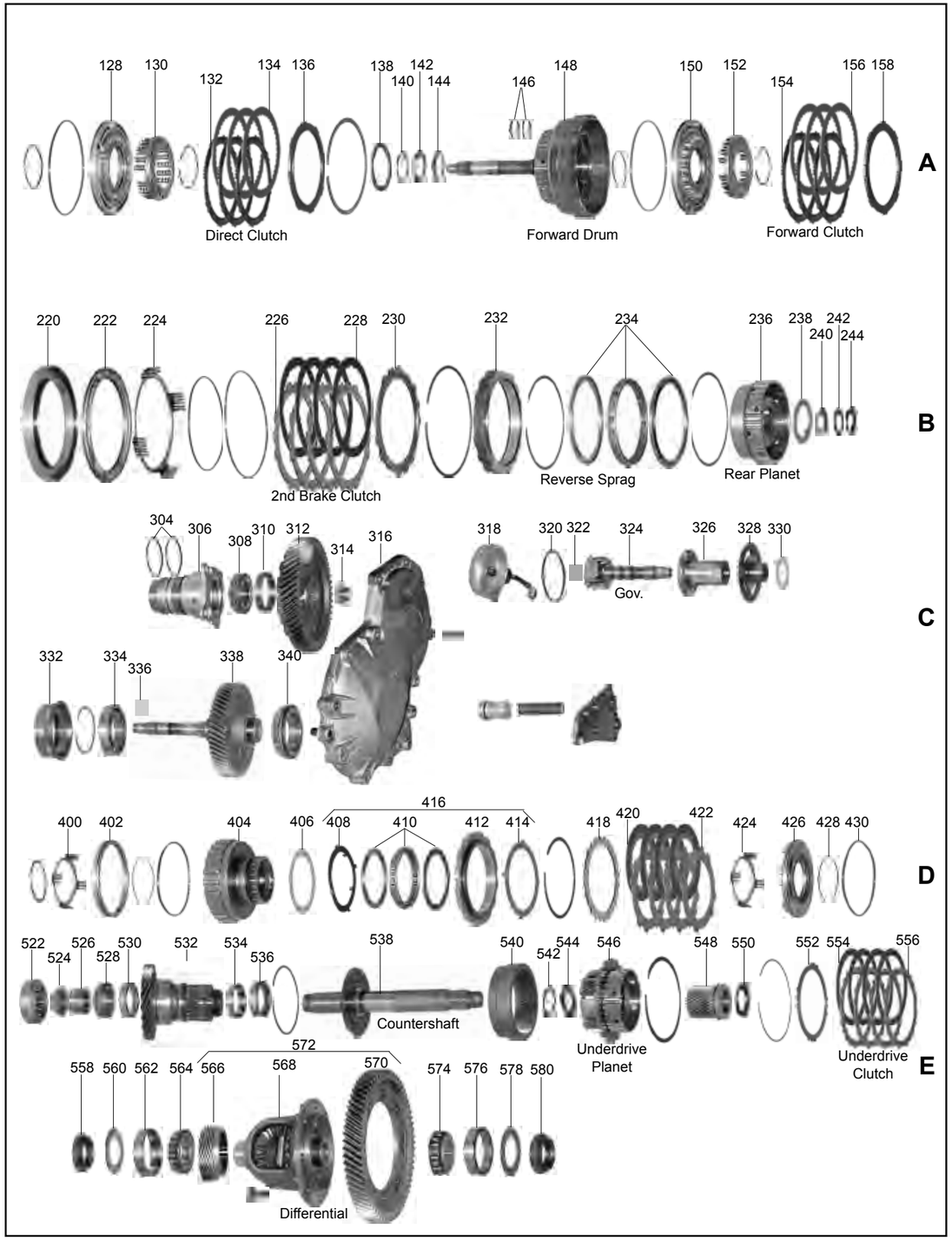
A
B
C
D
E
Direct Clutch
Forward Drum
Forward Clutch
2nd Brake Clutch
Reverse Sprag
Rear Planet
Gov.
Countershaft
Underdrive Planet
Underdrive Clutch
Differential

A130L, 32L, A140E, 41E, A240E, 47E, MX17

FWD
3, 4 SPEED
ILL #'s Refer to A140

ILL.		Qty.	Year	Part #	Ref. #
MASTER OVERHAUL KITS (WITH STEELS)					
N.I.	A130, A131, A132	1	83-94	67006B	N.L.
N.I.	A132L	1	95-Up	67006BB	N.L.
N.I.	A140E, A140L, A141E (MR2)	1	83-86	67006C	N.L.
N.I.	A140E, A140L (87-2/94)	1	87-E94	67006CA	N.L.
N.I.	A140E, A140L (2/94-01)	1	L94-01	67006CB	N.L.
N.I.	A240, A241, A242, A243, A244	1	85-99	67006D	N.L.
N.I.	A245E, A246E, A247E	1	93-02	67006DA	N.L.
N.I.	A245E, A246E	1	03-Up	67006E	N.L.
N.I.	MX17 (Exc. Daihatsu)	1	85-Up	67006A	N.L.
MASTER OVERHAUL KITS (LESS STEELS)					
N.I.	A130, A131, A132	1	83-94	67004B	N.L.
N.I.	A132L	1	95-Up	67004BB	N.L.
N.I.	A140E, A140L, A141E (MR2)	1	83-86	67004C	N.L.
N.I.	A140E, A140L (87-2/94)	1	87-E94	67004CA	N.L.
N.I.	A140E, A140L (2/94-01)	1	L94-01	67004CB	N.L.
N.I.	A240, A241, A242, A243, A244	1	85-99	67004D	N.L.
N.I.	A245E, A246E, A247E	1	93-02	67004DA	N.L.
N.I.	A245E, A246E	1	03-Up	67004E	N.L.
N.I.	MX17 (Exc. Daihatsu)	1	85-Up	67004A	N.L.
OVERHAUL KITS (WITH RINGS AND SEALS)					
N.I.	A130, A131, A132, A132L	1	83-Up	67002B	N.L.
N.I.	A140E, A140L, A141E (MR2)	1	83-Up	67002C	N.L.
N.I.	A240, A241, A242, A243, A244	1	85-99	67002D	N.L.
N.I.	A245E, A246E, A247E	1	93-02	67002DA	N.L.
N.I.	A245E, A246E	1	03-Up	67002E	N.L.
N.I.	MX17 (Exc. Daihatsu)	1	85-Up	67002A	N.L.
N.I.	MX17 (Daihatsu)	1	87-Up	67002AB	N.L.
SUB KITS					
N.I.	A241H Transfer Case Sub Kit	1	88-Up	87001	N.L.
GASKETS & O-RINGS					
118A	O-Ring, Pump (All)	1	83-Up	67311B	90301-99024
304C	Gasket, Differential Cover (A130L, A140)	1	83-Up	67303B	41182-12010
518E	Gasket, Filter (A130, A140)	1	83-Up	67326B	35339-32010
518E	Gasket, Filter (A240 to A244E)	1	85-Up	67326D	35339-12010
550E	Gasket, Overdrive Cover (A140)	1	83-Up	67304C	34112-32010
608F	Gasket, Bottom Pan (A130, A140)	1	83-Up	67300B	35168-32010
608F	Gasket, Bottom Pan (A240, A241, A242, A243, A244)	1	85-99	67300D	35168-12010
608F	Gasket, Bottom Pan (A245E, A246E, A247E)	1	93-02	67300DA	35168-12030
608F	Gasket, Bottom Pan (A245E, A246E)	1	03-Up	67300E	35168-12060
608F	Gasket, Bottom Pan (MX17)	1	85-Up	67300A	96053920
METAL CLAD SEALS					
100A	Pump (All)	1	83-Up	57070A	90311-38029
512E	Linkage (All)	1	83-Up	60072	91209-612-003
612F	Transfer Shaft Seal (All Exc A240E/L)	2	83-Up	67076BB	90311-12002
612F	Axle, Right (2.137" OD) (A141E, A240-246 33 x 54mm)	1	83-Up	67076B	90311-34012
612F	Axle, Right (2.145" OD) (A131L, A132L)	1	83-Up	67076A	96054226
612F	Axle, Right (2.180" OD) (A130L, A140E/L, A240-246 35 x 55mm)	1	83-Up	67076BA	90311-35019
612F	Axle, Right (2.492" OD) (A240-246 33 x 54mm)	1	83-Up	67076BC	90311-34013
638F	Axle, Left (A130L)	1	83-Up	67076BA	90311-35019
638F	Axle, Left (A131L, A132L) (83-2/98)	1	83-E98	67076B	90311-34012
638F	Axle, Left (A131L, A132L) (3/98-Up)	1	L98-Up	67077	90311-34023
638F	Axle, Left (A140, A240) (1.898" OD)	1	83-Up	67076BB	90311-12002
638F	Axle, Left (A140, A240) (2.137" OD)	1	83-Up	67076B	90311-34012
638F	Axle, Left (A140, A240) (2.180" OD)	1	83-Up	67076BA	90311-35019
638F	Axle, Left (A140, A240) (2.492" OD)	1	83-Up	67076BC	90311-34013
638F	Axle, Left (A241, 243, 247)	1	85-Up	67076BD	90311-35020
638F	Axle, Left (Awd) (A241)	1	85-Up	67077D	90311-44003/4
638F	Axle, Left (MX17)	2	83-Up	67076A	96054226
N.I.	Speed-O-Gear (All)	1	83-Up	57078A	90310-09001

A130L, 32L, A140E, 41E, A240E, 47E, MX17

ILL.		Qty.	Year	Part #	Ref. #
SEALING RINGS & KITS					
N.I.	Ring Kit (A130)	1	83-Up	67175BK	N.L.
N.I.	Ring Kit (A140, 240)	1	83-Up	67175CK	N.L.
FRICTION PLATES					
134A	Direct (.067")	2-3	83-Up	67106A	35633-32010
134A	Direct (.075")	2-3	83-Up	67106C	35633-32031
156A	Forward (.067")	3-4	83-Up	67106A	35633-32010
228B	2nd Brake (Coast) (.067")	3	83-Up	67100A	35677-30040
228B	2nd Brake (Coast) (.075")	2-3	83-Up	67100CA	35677-32050
252B	3rd Brake (Low/ Reverse) (.059") (33T) (Exc. A245, A246, A247)	5-6	83-Up	67100B	35677-32060
252B	3rd Brake (Low/ Reverse) (.067") (33T) (Exc. A245, A246, A247)	4-6	93-Up	67100A	35677-30040
252B	3rd Brake (Low/ Reverse) (.069") (33T) (A245, A246, A247)	5-6	93-Up	67100D	35677-12060
362C	Overdrive Brake (.067") (33T) (83-7/86)	3	83-E86	67100A	35677-30040
362C	Overdrive Brake (.075") (24T) (8/86-Up)	2	L86-Up	67100C	35677-20010
404D	Overdrive Direct (.067") (40T) (83-7/86)	2	83-E86	67106A	35633-32010
404D	Overdrive Direct (.075") (40T) (8/86-Up)	2	L86-Up	67106C	35633-32031
N.I.	Underdrive #2 Brake (.067") (33T) (A240, A241, A242, A243, A244)	3	85-Up	67102D	34262-12010
N.I.	Underdrive #2 Brake (.067") (33T) (A245, A246, A247)	3	93-Up	67102DA	34262-12030
N.I.	Underdrive #1 Direct (.075") (34T)	3-4	85-Up	67103C	34261-12020
N.I.	Differential (.075") (34T)	7	88-92	67103C	34261-12020
STEEL PLATES					
132A	Direct	2-3	83-Up	67122A	35634-32010
154A	Forward	3-4	83-Up	67122A	35634-32010
226B	2nd Brake (Coast)	3-4	83-Up	67120B	35648-32010
254B	3rd Brake (Low/ Reverse) (Exc. A245, 246, 247) (4.580" ID")	5-8	83-Up	67120C	35648-32020
254B	3rd Brake (Low/ Reverse) (A245, 246, 247)(4.921" ID)	6	93-Up	67130D	35648-12020
360C	Overdrive Brake (.071") (83-7/86)	3	83-E86	67120C	35648-32020
360C	Overdrive Brake (.075") (8/86-Up)	3	L86-Up	67120CA	35648-20010
360C	Overdrive Brake (.098")	AR	88-Up	67120CB	35648-32040
406D	Overdrive Direct (8T) (83-7/86)	2-3	83-E86	67122A	35634-32010
406D	Overdrive Direct (20T) (8/86-Up)	2	L86-Up	67122C	35634-20010
N.I.	Underdrive #2 Brake (3.150" ID)	3	83-Up	67122D	34264-12010
N.I.	Underdrive #2 Brake (3.425" ID)	3	93-Up	67122DA	34264-12020
N.I.	Underdrive #1 Direct	3-4	85-Up	67121D	34263-12010
N.I.	Differential	8	88-92	67121D	34263-12010
PRESSURE PLATES					
136A	Forward & Direct (2.60mm)	1-2	83-Up	67146AB	35675-12010
136A	Forward & Direct (3.00mm)	1-2	83-Up	67146AA	35675-32010
136A	Forward & Direct (3.37mm)	1-2	83-Up	67146A	35675-32020
FILTERS					
520E	A130, A140 (2wd w/ Rectangle Pick-Up Opening .500" X 2.250")	1	83-Up	67010B	35330-32010
520E	A130, A140 (2wd w/ Square Pick-Up Opening 2" X 2.250")	1	83-Up	67010BA	35330-20H20
520E	A240, A241, A242, A243, A244 (Exc. A241 Awd)	1	85-Up	67010D	35330-12010
520E	A245, A246, A247	1	93-02	67010DA	35330-12030
520E	A245	1	03-Up	67010DB	N.L.
520E	MX17 (Exc. Daihatsu)	1	85-Up	67010A	96053975
FILTER KITS					
N.I.	A130, A140 (2wd w/ Rectangle Pick-Up Opening .500" X 2.250")	1	83-Up	67011BA	N.L.
N.I.	A130, A140 (2wd w/ Square Pick-Up Opening 2" X 2.250")	1	83-Up	67011B	N.L.
N.I.	A240, A241, A242, A243, A244 (Exc. A241 Awd)	1	85-Up	67011D	N.L.
N.I.	A245, A246, A247	1	93-02	67011DA	N.L.
N.I.	A245	1	03-Up	67011DB	N.L.
N.I.	MX17 (Exc. Daihatsu)	1	85-Up	67011A	N.L.
BANDS					
122A	Band (1" Wide) (A130, A140, A240)	1	83-Up	67022B	35810-32020
122A	Band (1.250" Wide) (MX17)	1	85-Up	67022A	96054009
BUSHINGS					
N.I.	Bushing Kit (A130)	1	83-Up	67030B	N.L.
N.I.	Bushing Kit (A140)	1	83-Up	67030C	N.L.
N.I.	Bushing Kit (A240)	1	85-Up	67030B	N.L.

ILL.		Qty.	Year	Part #	Ref. #
BUSHINGS (Cont.)					
N.I.	Bushing Kit (MX17)	1	85-Up	67030B	N.L.
102A	Pump Body (All)	1	83-Up	57034A	N.L.
108A	Stator (Front) (All)	1	83-Up	57036C	N.L.
116A	Stator (Rear) (All)	1	83-Up	67037A	N.L.
124A	Direct Drum (1.855" ID)	1	83-Up	67046A	N.L.
124A	Direct Drum (2.030" ID)	1	87-Up	67046AA	N.L.
166A	Input Hub (All)	1	83-Up	67050B	N.L.
200B	Sun Gear (All)	2	83-Up	67052A	N.L.
412D	Overdrive Sun Gear, A140 (Front)	1	83-Up	67038C	90384-22015
418D	Overdrive Sun Gear, A140 (Rear)	1	83-Up	67038CA	90384-22014
THRUST WASHERS/BEARINGS					
WASHERS					
N.I.	Washer Kit (A130)	1	83-Up	67200B	N.L.
N.I.	Washer Kit (A140)	1	83-Up	67200C	N.L.
N.I.	Washer Kit (A240)	1	83-Up	67200D	N.L.
N.I.	Washer Kit (MX17, A210)	1	83-Up	67200A	N.L.
120A	Stator to Direct Drum (Exc. 87-Up MX17)	1	83-Up	67211AA	35616-32010
120A	Stator to Direct Drum (87-Up MX17)	1	87-Up	67211A	35616-32010
138A	Direct Drum to Forward Drum (3 Tab) (Exc. 87-Up MX17)	1	83-Up	67229A	35616-32021
138A	Direct Drum to Forward Drum (3 Tab) (87-Up MX17)	1	87-Up	67229AA	96057151
208B	Shell to Sprag (2.750" OD) (Plastic)	1	83-Up	67244A	35739-32011
238B	Rear Planet to Rear Ring Gear Hub (Plastic)	1	83-Up	67241A	35738-12010
346C	Overdrive Planet, Bronze (.060")	1	83-Up	67217A	N.L.
346C	Overdrive Planet, Bronze (.110")	1	83-Up	57217	34737-20011
BEARINGS					
528E	Bearing w/ Race, Pinion (18 Rollers)	1	83-Up	87274B	90366-36003
528E	Bearing w/ Race, Pinion (20 Rollers)	1	83-Up	67274BA	90366-35084
528E	Bearing w/ Race, Pinion (21 Rollers)	1	83-Up	67274BB	90366-35090
544E	Bearing, Transfer Driven (A130, A140)	1	83-Up	67281B	90366-40010
618F	Bearing, Differential (A130 Corolla Gas) (Both Sides)	2	83-Up	67292B	90368-38002
618F	Bearing, Differential (A140 Speed-O Side) (87-Up)	1	87-Up	67292CB	90366-40016
630F	Bearing, Differential (A140 Ring Gear Side)	1	83-Up	67289CA	90366-44001
ELECTRICAL COMPONENTS					
516E	Solenoid, Lock-Up (TCC) (A140)	1	91-Up	67425BA	85420-20110
516E	Solenoid, Lock-Up (TCC) (A240, A241, A242, A243, A244)	1	85-Up	67425D	85420-12061
516E	Solenoid, Lock-Up (TCC) (A245, A246, A247)	1	93-Up	67425DA	85420-12140
602F	Solenoid, 2-3 Shift (A140) (2 Bolt L Shaped Type)	1	83-Up	67422C	85420-32041
604F	Solenoid, 1-2 Shift (A140) (1 Bolt Triangle Type)	1	83-Up	67421C	85420-32021
604F	Solenoid, Shift (A240)	1	85-Up	67421D	85420-22080
604F	Solenoid, Shift (MX17) (2 Solenoid Pack)	2	85-Up	67421AK	N.L.
N.I.	Solenoid Kit (Shift & Lock-Up) (A240, A241, A242, A243, A244)	1	85-Up	67420DK	85420-22080
N.I.	Solenoid Kit (Shift & Lock-Up) (A245, A246, A247)	1	93-Up	67420DBK	85420-00000
N.I.	Solenoid, Overdrive Cancel (A240)	1	85-Up	67423D	85420-10011
N.I.	Solenoid, SLT (EPC) (Linear) (A245, A246, A247)	1	02-03	67431	35290-12020
N.I.	Solenoid, SLT (EPC) (Linear) (A245, A246, A247)	1	04-Up	67431A	35290-12030
VALVE BODY RECALIBRATION KITS					
N.I.	Reprogramming Kit™ (A245E) (Transgo®)	1	83-Up	T67169D	A245E-HD
PUMPS					
112A	Pump Complete (A130, A140)	1	83-Up	67500B	N.L.
PUMP COMPONENTS					
N.I.	Stator Shaft Tube (All)	1	83-Up	67529A	90374-22002
DRUMS & COMPONENTS					
126A	Direct (2 Clutch) (Exc. MX17) (2/84-Up)	1	84-Up	67555BB	35605-20020
126A	Direct (3 Clutch) (Exc. MX17) (2/84-Up)	1	84-Up	67555CA	35605-32030
148A	Forward w/ Shaft (3 Clutch) (2/84-Up)	1	84-Up	67554A	35701-32021
148A	Forward w/ Shaft (4 Clutch) (2/84-Up)	1	84-Up	67554C	35701-32031

ILL.		Qty.	Year	Part #	Ref. #
PLANETS AND COMPONENTS					
178A	Front	1	83-Up	67582A	35720-32010
236B	Rear	1	83-Up	67584A	N.L.
ONE WAY CLUTCHES					
212B	Sprag, Intermediate	1	83-Up	57652D	35791-30020
234B	Sprag, Low	1	83-Up	67654A	35792-32020
350C	Sprag, Overdrive	1	83-Up	67650C	34714-32021
N.I.	Sprag Assembly, Underdrive (A240)	1	85-Up	67640D	34360-12010
VALVE BODIES & GOVERNORS					
314C	Governor (Gear Type) (A130, A140)	1	83-Up	67680B	35480-32022
606F	Valve Body (A140) (w/ 2 Solenoids)	1	83-Up	67740-1	N.L.
DIFFERENTIALS					
628F	Differentials (18T, 71T) (4 Groove) (A140)	1	83-Up	67715BF	N.L.
MISCELLANEOUS COMPONENTS					
532E	Pinion Retainer (Aluminum w/ Seal) (A130, A140)	1	83-Up	67735B	N.L.
540E	Crush Sleeve (For Pinion) (A130, A140)	1	83-Up	67696B	41231-32010
TECHNICAL MANUALS					
N.I.	Tech Manual (A140)	1	83-Up	67400C	N.L.
N.I.	Tech Manual (MX17)	1	85-Up	67400A	N.L.

Notes

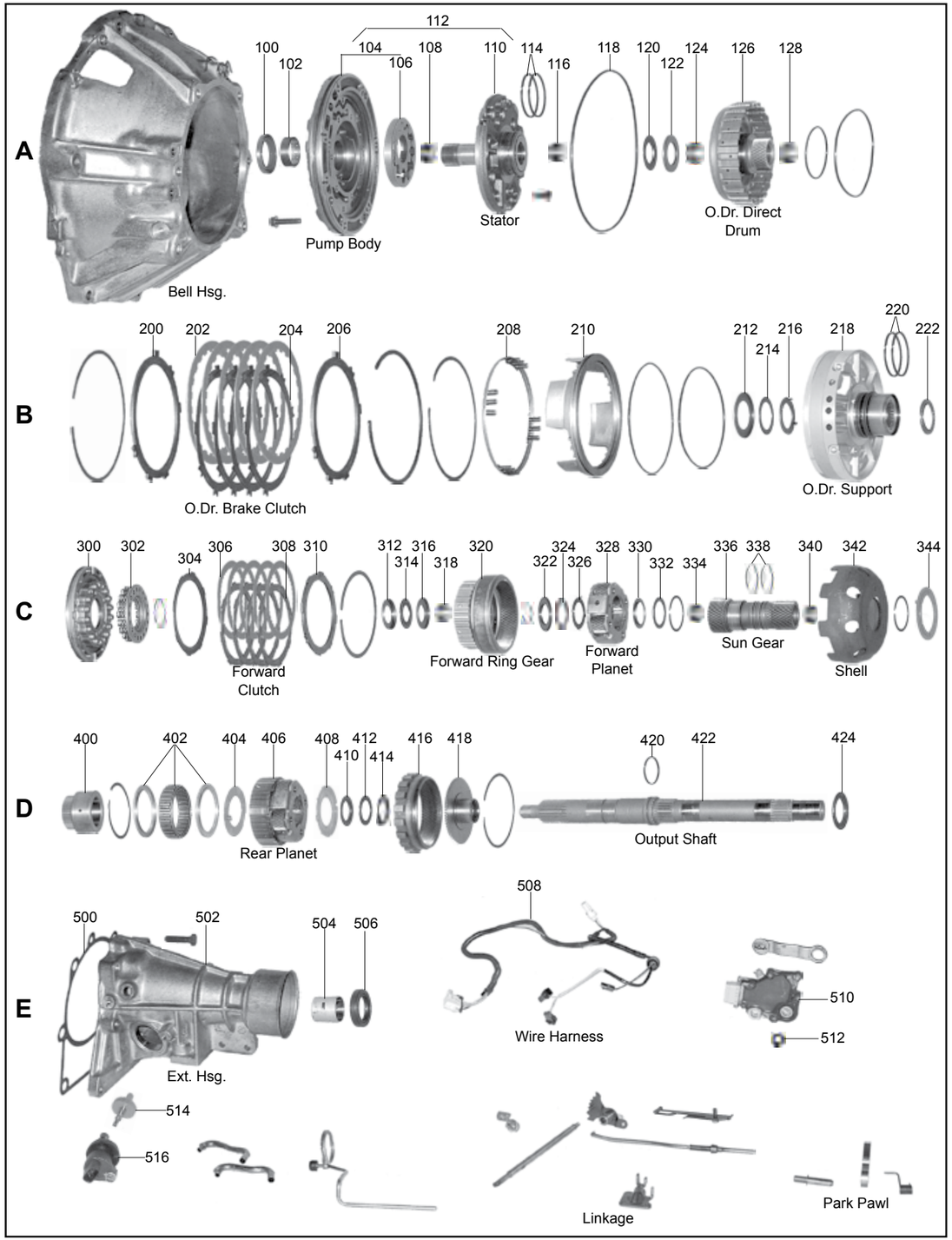
A
B
C
D
E
Bell Hsg.
Pump Body
Stator
O.Dr. Direct Drum
O.Dr. Brake Clutch
O.Dr. Support
Forward Clutch
Forward Ring Gear
Forward Planet
Sun Gear
Shell
Rear Planet
Output Shaft
Ext. Hsg.
Wire Harness
Linkage
Park Pawl

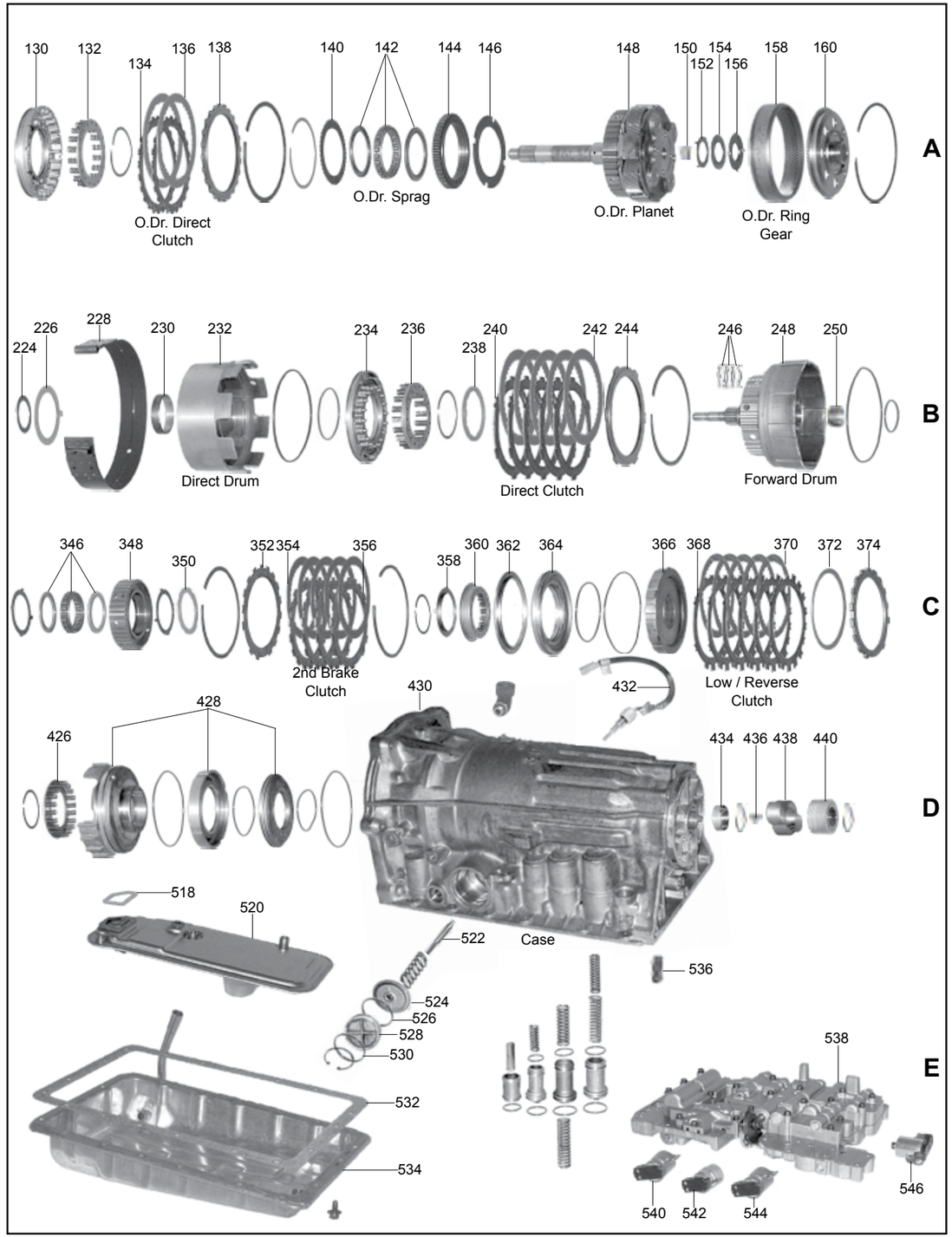
A
B
C
D
E
O.Dr. Direct Clutch
O.Dr. Sprag
O.Dr. Planet
O.Dr. Ring Gear
Direct Drum
Direct Clutch
Forward Drum
2nd Brake Clutch
Low / Reverse Clutch
Case

ILL.		Qty.	Year	Part #	Ref. #
MASTER OVERHAUL KITS (WITH STEELS)					
N.I.	A340E, A340H (Toyota)	1	85-99	97006	N.L.
N.I.	A340E, A340F (V6 T-100, Tacoma, 4 Runner)	1	93-99	97006D	N.L.
N.I.	A340E, A340F (Toyota) (4 Cyl.)	1	95-99	97006E	N.L.
N.I.	A340E, A340F (Kia Sorento) (Toyota) (Exc. 4 Cyl. Tacoma)	1	00-Up	97006J	N.L.
N.I.	A340E (Toyota) (4 Cyl Tacoma)	1	00-Up	97006K	N.L.
N.I.	A341E (Lexus, Volvo)	1	90-00	97006C	N.L.
N.I.	A343F (Landcruiser, Lexus LX450, LX470)	1	95-99	97006G	N.L.
N.I.	A343F (Landcruiser, Lexus LX470)	1	00-Up	97006J	N.L.
N.I.	AW4 (Jeep)	1	87-01	97006A	N.L.
N.I.	A350 (Lexus GS300)	1	96-98	97006H	N.L.
N.I.	R150F Transfer Case	1	85-94	197006	N.L.
MASTER OVERHAUL KITS (LESS STEELS)					
N.I.	A340E, A340H (Toyota)	1	85-99	97004	N.L.
N.I.	A340E, A340F (V6 T-100, Tacoma, 4 Runner)	1	93-99	97004D	N.L.
N.I.	A340E, A340F (Toyota) (4 Cyl.)	1	95-99	97004E	N.L.
N.I.	A340E, A340F (Kia Sorento) (Toyota) (Exc. 4 Cyl. Tacoma)	1	00-Up	97004J	N.L.
N.I.	A340E (Toyota) (4 Cyl Tacoma)	1	00-Up	97004K	N.L.
N.I.	A341E (Lexus, Volvo)	1	90-00	97004C	N.L.
N.I.	A343F (Landcruiser, Lexus LX450, LX470)	1	95-99	97004G	N.L.
N.I.	A343F (Landcruiser, Lexus LX470)	1	00-Up	97004J	N.L.
N.I.	AW4 (Jeep)	1	87-01	97004A	N.L.
N.I.	A350 (Lexus GS300)	1	96-98	97004H	N.L.
N.I.	(Automatic Transfer Case for A340H)	1	85-94	197004	N.L.
OVERHAUL KITS (WITH RINGS AND SEALS)					
N.I.	A340E, A340H (Toyota)	1	85-99	97002	N.L.
N.I.	A340E, A340F (Toyota)	1	00-Up	97002J	N.L.
N.I.	A341E (Lexus, Volvo)	1	90-00	97002	N.L.
N.I.	A343F (Lexus, Landcruiser)	1	95-99	97002G	N.L.
N.I.	A343F (Lexus)	1	00-Up	97002J	N.L.
N.I.	A340H, A340F (AW4 Jeep)	1	87-99	97002	N.L.
N.I.	A350	1	96-98	97002G	N.L.
N.I.	R150F Transfer Case	1	85-Up	197002	N.L.
GASKETS & O-RINGS					
118A	O-Ring, Pump to Case	1	85-Up	97311	"FN01-19-242"
500E	Gasket, Extension Housing (2wd)	1	85-Up	57305A	35182-22010
518E	"O-Ring, Gasket, Filter (2 Piece) "	1	85-Up	97326A	35339-30070
532E	Gasket, Bottom Pan	1	85-Up	97300	N.L.
N.I.	Gasket, Transfer Case	1	85-Up	197304	35178-30010
N.I.	Gasket Kit, Valve Body (95-Up) (Jeep)	1	95-Up	97320BK	N.L.
N.I.	Gasket Kit, Valve Body (A340)	1	89-99	97320BK	N.L.
N.I.	Gasket Kit, Valve Body (A341)	1	90-00	97320CK	N.L.
METAL CLAD SEALS					
100A	Front Pump	1	85-Up	57070A	90311-38029
506E	Extension Housing (38 x 58 x 11mm) 2.250" OD 2wd	1	85-Up	57074A	90311-38040
506E	Extension Housing (40 x 58 x 11mm) 2.250" OD 2wd	1	85-Up	97074	90311-40001
506E	Extension Housing 2 3/16" OD (Lexus, Volvo)	1	85-Up	97074C	90311-42024
506E	Adapter Housing (Transmission to Transfer Case-Jeep)	1	85-Up	97074B	83504055
N.I.	Transfer Case (Front & Rear)	1	85-Up	197074A	90316-40001
SEALING RINGS & KITS					
N.I.	Ring Kit	1	85-Up	97175K	N.L.
FRICTION PLATES					
202B	Overdrive Brake .083" (24T)	3-5	85-Up	97100	34633-50010
136A	Overdrive Direct .083" (32T)	2	85-Up	97102	35633-30040
202B	Overdrive Brake .083" (24T) (High Performance)	3-5	85-Up	97100H	N.L.
242B	Direct .083" (40T)	3-5	85-Up	97106	35667-50030
242B	Direct .068" (40T) (High Performance)	3-5	85-Up	97106H	N.L.
306C	Forward .067" (40T)	3-6	93-Up	97108	35677-14010
306C	Forward .075" (40T)	6-7	92-Up	97108B	35677-50010
306C	Forward .078" (40T)	4-5	92-Up	97108C	35677-30170
306C	Forward .083" (40T)	4-5	85-Up	97108A	35677-30090

ILL.		Qty.	Year	Part #	Ref. #
FRICTION PLATES (Cont.)					
354C	2nd Brake .078" (32T)	4-5	85-Up	97104	35667-50020
354C	2nd Brake .078" (32T) (High Performance)	4-5	85-Up	97104H	N.L.
370C	Low/ Reverse .067" (32T)	5-7	85-Up	97114	35677-30130
N.I.	Transfer Case, Direct & Front .067" (44T)	14	88-95	197106A	34653-35020
N.I.	Transfer Case, Low .067" (53T)	7	88-95	197114A	34683-35020
STEEL PLATES					
134A	Overdrive Direct .078" (24T)	1-2	85-Up	97122	34616-30010
134A	Overdrive Direct .098" (24T) Volvo	1	92-Up	97122C	3549181-0
134A	Overdrive Direct .118" (24T)	AR	85-Up	97122A	34615-20010
204B	Overdrive Brake .078" (6T)	2-4	85-Up	97120	34634-30020
204B	Overdrive Brake .078" (6T) Volvo	3-5	92-Up	97120C	34634-30021
240B	Direct .071" (6T)	3-4	93-99	87122AD	35634-32020
240B	Direct .091" (24T)	4	00-Up	97126D	35647-22030
240B	Direct .091" (6T)	1-4	85-99	97126	35647-30011
240B	Direct .118" (6T)	3-4	87-99	97126A	35647-14010
240B	Direct .157" (6T)	3-4	87-99	97126B	35647-30040
308C	Forward .071" (8T)	6	92-Up	67122A	35634-32010
308C	Forward .078" (8T)	4-5	85-91	97128	35634-30100
308C	Forward .091" (8T)	4-5	92-Up	97128C	35634-30110
356C	2nd Brake .071" (16T)	1	85-Up	97124	35647-30030
356C	2nd Brake .098" (16T)	4	85-Up	97124A	35647-30020
356C	2nd Brake .157" (16T)	AR	85-Up	97124B	35647-30050
368C	Low/ Reverse .071" (15T)	5-7	85-Up	97134	35648-30031
N.I.	Transfer Case, Direct & Front .071" (29T)	14	88-95	197126A	34656-35010
N.I.	Transfer Case, Direct & Front .100" (29T)	1	88-95	197126AA	34656-35020
N.I.	Transfer Case, Low .071" (8T)	6	88-95	197134A	34686-35010
PRESSURE PLATES					
310C	Forward	1	85-Up	97148	35635-30040
FILTERS					
520E	Pick-up (2wd)	1	89-94	97010	35330-30011
520E	Pick-up (4wd)	1	85-94	97010A	35330-35010
520E	4 Runner (2wd)	1	89-99	97010	35330-30011
520E	4 Runner (2wd)	1	00-01	97010CA	35330-30020
520E	4 Runner (2wd)	1	02-Up	97010EA	35330-60030
520E	4 Runner (4wd)	1	85-94	97010A	35330-35010
520E	4 Runner (4wd) (95-3/96)	1	95-E96	97010H	35330-35020
520E	4 Runner (4wd) (4/96-99)	1	L96-99	97010E	35330-60020
520E	4 Runner (4wd)	1	00-Up	97010EA	35330-60030
520E	Landcruiser	1	94-97	97010E	35330-60020
520E	Landcruiser	1	98-02	97010EA	35330-60030
520E	Tacoma (2wd)	1	95-99	97010	35330-30011
520E	Tacoma (2wd)	1	00-01	97010CA	35330-30020
520E	Tacoma (2wd)	1	02-Up	97010EA	35330-60030
520E	Tacoma (4wd)	1	95-96	97010D	35330-22010
520E	Tacoma (4wd)	1	97-99	97010E	35330-60020
520E	Tacoma (4wd)	1	00-04	97010EA	35330-60030
520E	Tundra (2wd & 4wd)	1	2000	97010	35330-30011
520E	Tundra (2wd & 4wd) (V6)	1	01-04	97010CA	35330-30020
520E	Tundra (2wd & 4wd) (V8)	1	01-04	97010EA	35330-60030
520E	T100 (2wd)	1	93-98	97010	35330-30011
520E	T100 (4wd)	1	93-94	97010A	35330-35010
520E	T100 (4wd)	1	95-97	97010D	35330-22010
520E	T100 (4wd)	1	1998	97010E	35330-60020
520E	Sequoia	1	01-04	97010EA	35330-60030
	Other Applications:				
520E	A340E (Also fits Cressida, Previa, Supra w/o Turbo, Lexus SC300)	1	86-00	97010	35330-30011
520E	A340E, A340F, AW4 (Jeep) (2wd & 4wd)	1	87-93	97010B	89835-01032
520E	A340F, A340H (4wd) (Trooper 88-91, Mitsubishi Various)	1	85-00	97010A	35330-35010
520E	A341E (Toyota Supra w/Turbo, Lexus/Volvo Various)	1	90-00	97010C	35330-50010
520E	A341E (Lexus GS300)	1	94-95	97010CA	35330-30020
520E	A343F (.750" Neck) (Lexus LX450)	1	96-97	97010E	35330-60020
520E	A343F (1" Neck) (Lexus LX470)	1	98-02	97010EA	35330-60030
520E	A350E (Lexus GS300)	1	96-97	97010G	35330-30040

ILL.		Qty.	Year	Part #	Ref. #
BANDS					
228B	Brake	1	85-Up	97022	35810-30020
BUSHINGS					
N.I.	Bushing Kit	1	85-Up	97030	N.L.
N.I.	Bushing Kit, R150F (Transfer Case)	1	88-Up	197030A	N.L.
102A	Bushing, Front Pump	1	85-Up	57034A	N.L.
116A	Stator Support (Rear)	1	85-Up	97037	N.L.
230B	Direct Drum	1	85-Up	97046	N.L.
250B	Input Shaft	1	85-Up	97047	N.L.
318C	Front Planet Ring Gear	1	85-Up	97050	N.L.
504E	Extension Housing (35mm Yoke)	1	85-Up	97066A	N.L.
504E	Extension Housing (38mm Yoke)	1	85-Up	57066A	90999-72020
504E	Extension Housing (40mm Yoke)	1	85-Up	97066	N.L.
THRUST WASHERS/BEARINGS					
WASHERS					
N.I.	Washer Kit	1	85-Up	97200A	N.L.
ELECTRICAL COMPONENTS					
N.I.	Solenoid Kit (Shift Only) A340E	1	85-Up	67420CK	52-0230
N.I.	Solenoid Kit (Shift Only) A341E	1	85-Up	97420AK	52-9021
N.I.	Solenoid Kit, A340E (3 Solenoids w/ Cable)	1	85-97	97420K	52-9002
N.I.	Solenoid Kit, A340E (4 Solenoids w/o Cable)	1	98-Up	97420BK	N.L.
N.I.	Solenoid Kit, A341E (4 Solenoids w/ Cable) (Lexus)	1	90-97	97420DK	N.L.
N.I.	Solenoid Kit, A341E (4 Solenoids w/o Cable) (Volvo)	1	93-98	97420BK	N.L.
540E	Solenoid, SLN (Acc. Control) (Linear) (A341, A343)	1	90-Up	97428	35270-50010
542E	Solenoid, Lock-Up (On/Off) ("E" Solenoid) (A340)	1	85-Up	97425	85420-30110
542E	Solenoid, SL (Lock-Up) (Linear) (A341, A343)	1	90-Up	97425A	35280-50010
544E	Solenoid, SLT (EPC) (Linear) (A340)	1	00-Up	97431	35290-60020
546E	Solenoid, Shift (On/Off)	2	85-Up	67421D	85420-22080
VALVE BODY RECALIBRATION KITS					
N.I.	Shift Kit®, A340, A341, A343 & Jeep AW4 (Transgo®)	1	85-Up	T97165	SK® 340
N.I.	Reprogramming Kit™ (A340, A341, A343 & Jeep AW4) (Transgo®)	1	85-Up	T97169	340-HD2
VALVE BODY COMPONENTS					
N.I.	Boost Valve & Sleeve	1	85-Up	97741F	N.L.
N.I.	Pressure Regulator Valve Kit (OS)	1	85-Up	97741P	N.L.
PUMPS					
112A	Pump, Complete (Exc. Lexus)	1	85-Up	97500	N.L.
112A	Pump, Complete (Lexus)	1	90-Up	97500BA	N.L.
DRUMS & COMPONENTS					
126A	Overdrive (2 Clutch) (31T Sun Gear) (No Sensor)	1	85-Up	97551C	N.L.
126A	Overdrive (2 Clutch) (31T Sun Gear) (16T Sensor)	1	85-Up	97551CA	N.L.
126A	Overdrive (2 Clutch) (31T Sun Gear) (32T Sensor)	1	85-Up	97551CB	N.L.
126A	Overdrive (2 Clutch) (33T Sun Gear) (No Sensor)	1	85-Up	97551	N.L.
126A	Overdrive (2 Clutch) (33T Sun Gear) (16T Sensor)	1	85-Up	97551BA	N.L.
126A	Overdrive (2 Clutch) (33T Sun Gear) (32T Sensor)	1	85-Up	97551B	34601-60020
248B	Forward	1	85-Up	97554A	N.L.
232B	Direct (5 Clutch) (4.625" OD Piston)	1	85-Up	97555EA	35605-50010
232B	Direct (5 Clutch) (5.000" OD Piston)	1	85-Up	97555E	35605-22030
N.I.	Direct (R150F Transfer Case)	1	85-Up	197555	N.L.
PLANETS AND COMPONENTS					
148A	Overdrive Kit (No Reluctor) (20 Spline)	1	85-Up	97580BK	N.L.
148A	Overdrive Kit (No Reluctor) (26 Spline)	1	85-Up	97580K	N.L.
148A	Overdrive Kit (w/ Reluctor) (No Groove)	1	85-Up	97580CK	N.L.
148A	Overdrive Kit (w/ Reluctor) (2 Groove)	1	85-Up	97580AK	N.L.
320C	Ring Gear, w/ Hub Front Planet	1	85-Up	97592A	N.L.
328C	Front (4 Gear)	1	85-Up	97582	N.L.
328C	Front (5 Gear)	1	92-Up	97582A	N.L.
406D	Rear (4 Gear) (33T Sun Gear)	1	85-Up	97584	N.L.

ILL.		Qty.	Year	Part #	Ref. #
PLANETS AND COMPONENTS (Cont.)					
406D	Rear (4 Gear) (42T Sun Gear)	1	85-Up	97584A	N.L.
406D	Rear (5 Gear)	1	99-Up	97584AA	3570560010
416D	Ring Gear, Rear Planet	1	85-Up	97594A	N.L.
SUN GEARS					
336C	Sun Gear, Forward	1	85-Up	97612A	N.L.
ONE WAY CLUTCHES					
142A	Sprag, Overdrive	1	85-Up	67650C	34714-32021
346C	Sprag, Intermediate	1	85-Up	97652	35790-30030
402D	Sprag (Low)	1	85-Up	97654	35792-30042
SHELLS & SUPPORTS					
218B	Center Support, Aluminum (Cast # 8930)	1	85-Up	97630	N.L.
218B	Center Support, Aluminum (Cast # 8931)	1	85-Up	97630A	N.L.
MISCELLANEOUS COMPONENTS					
304C	Cushion, Forward Steel	1	85-Up	97853	N.L.
N.I.	Detent Cable, Repair End	1	85-Up	T57451	N.L.
TECHNICAL MANUALS					
N.I.	Tech Manual (AW30-80LE) (Isuzu)	1	85-Up	97400	N.L.
N.I.	Tech Manual (Toyota, Jeep AW-4)	1	85-Up	97400A	N.L.
Notes					

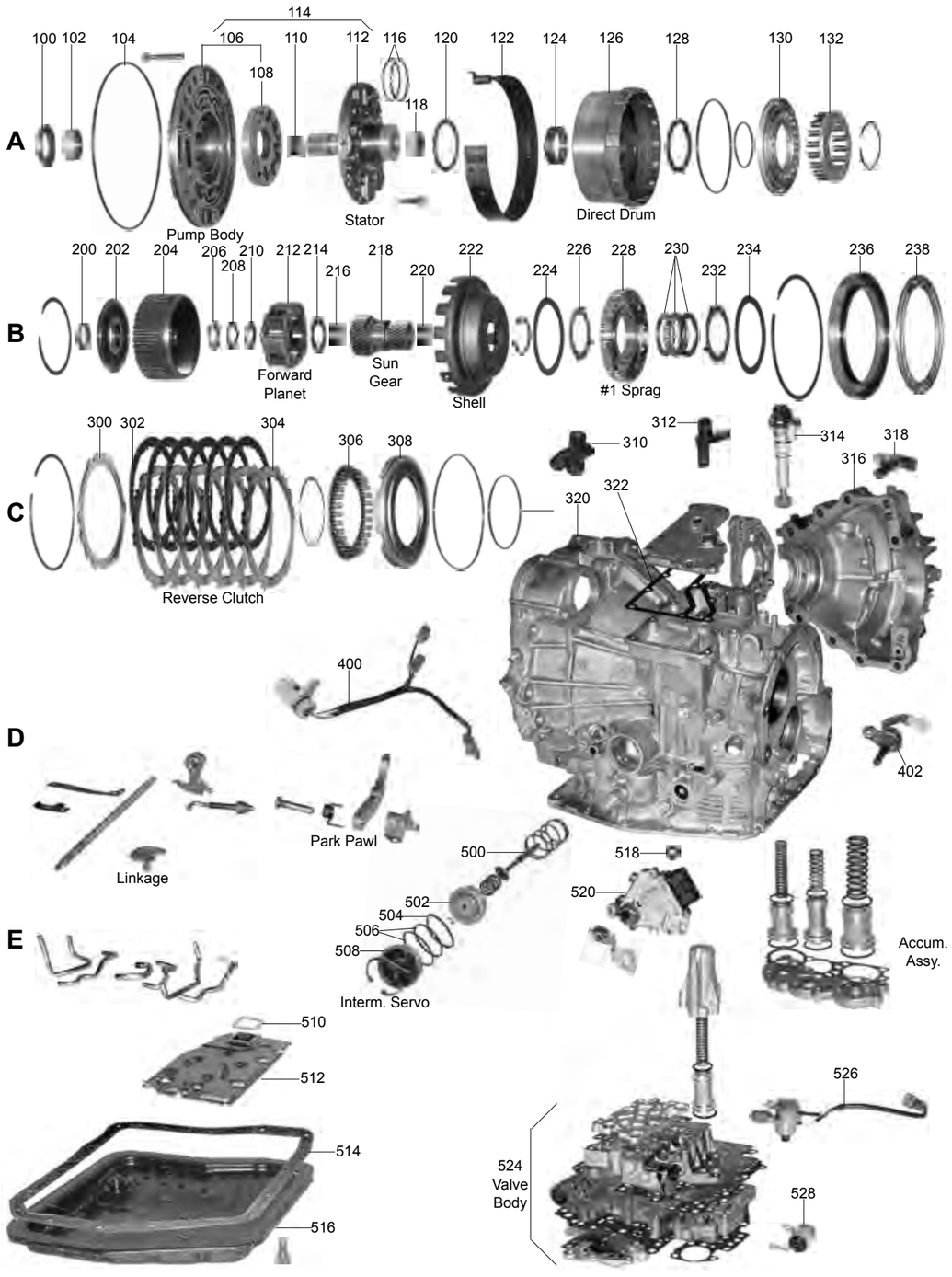
A
B
C
D
E
100 102 104 106 108 110 112 114 116 118 120 122 124 126 128 130 132
Pump Body
Stator
Direct Drum
200 202 204 206 208 210 212 214 216 218 220 222 224 226 228 230 232 234 236 238
Forward Planet
Sun Gear
Shell
#1 Sprag
300 302 304 306 308 310 312 314 316 318 320 322
Reverse Clutch
400
Park Pawl
Linkage
402
500 502 504 506 508
Interm. Servo
518 520
Accum. Assy.
510 512 514 516
524 Valve Body
526 528

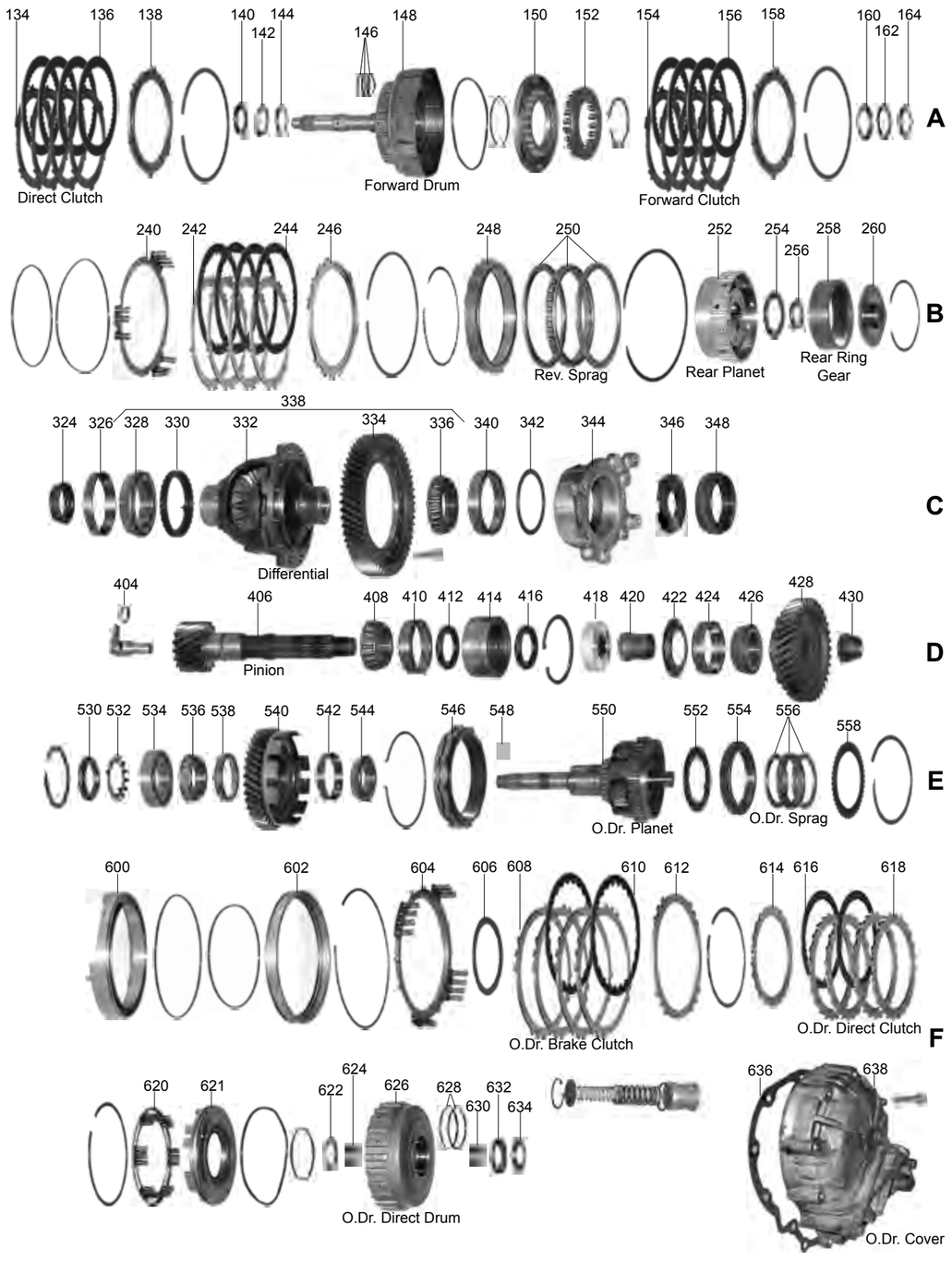
A
B
C
D
E
F
134 136 138 140 142 144 146 148 150 152 154 156 158 160 162 164
Direct Clutch
Forward Drum
Forward Clutch
240 242 244 246 248 250 252 254 256 258 260
Rev. Sprag
Rear Planet
Rear Ring Gear
324 326 328 330 332 334 336 338 340 342 344 346 348
Differential
404 406 408 410 412 414 416 418 420 422 424 426 428 430
Pinion
530 532 534 536 538 540 542 544 546 548 550 552 554 556 558
O.Dr. Planet
O.Dr. Sprag
600 602 604 606 608 610 612 614 616 618
O.Dr. Brake Clutch
O.Dr. Direct Clutch
620 621 622 624 626 628 630 632 634
O.Dr. Direct Drum
636 638
O.Dr. Cover

ILL.		Qty.	Year	Part #	Ref. #
MASTER OVERHAUL KITS (WITH STEELS)					
N.I.	A540E (88-5/91)	1	88-E91	87006A	N.L.
N.I.	A540E (6/91-93) (Incl 98-00 Sienna)	1	L91-93	87006AA	N.L.
N.I.	A540H (RAV-4 4wd)	1	96-Up	87006AB	N.L.
N.I.	A541E (Exc. 98-00 Sienna)	1	94-Up	87006B	N.L.
MASTER OVERHAUL KITS (LESS STEELS)					
N.I.	A540E (88-5/91)	1	88-E91	87004A	N.L.
N.I.	A540E (6/91-93) (Incl 98-00 Sienna)	1	L91-93	87004AA	N.L.
N.I.	A540H (RAV-4 4wd)	1	96-Up	87004AB	N.L.
N.I.	A541E (Exc. 98-00 Sienna)	1	94-Up	87004B	N.L.
N.I.	Sub Kit, A540H Differential Only	1	88-93	87001	N.L.
OVERHAUL KITS (WITH RINGS AND SEALS)					
N.I.	A540E (Incl 98-00 Sienna)	1	88-93	87002A	N.L.
N.I.	A540H (RAV-4 4wd)	1	88-93	87002A	N.L.
N.I.	A541E (Exc. 98-00 Sienna)	1	94-Up	87002B	N.L.
N.I.	Sub Kit, A540H Differential Only	1	88-93	87001	N.L.
GASKETS & O-RINGS					
104A	O-Ring, Pump	1	88-Up	67311B	90301-99024
514E	Gasket, Bottom Pan (A540)	1	88-00	87300	35168-32020
514E	Gasket, Bottom Pan (A541E)	1	94-03	87300E	35168-33010
METAL CLAD SEALS					
100A	Front Pump	1	88-Up	57070A	90311-38029
324C	Right Axle (A540E, A541E)	1	88-Up	87076A	90311-40010
324C	Right Axle (A540H) (Awd)	1	88-Up	87076B	N.L.
348C	Left Axle (A540E, A541E)	1	88-Up	87077A	90311-50011
348C	Left Axle (A540H) (Awd)	1	88-Up	67077D	90311-44003/4
412D	Transfer Shaft Seal	2	88-93	87075A	N.L.
518E	Manual Lever Shaft	2	88-Up	60072	91209-612-003
N.I.	Extension Housing (A540H Awd)	1	88-91	57074A	90311-38040
N.I.	Speedometer Gear Shaft	1	88-Up	57078A	90310-09001
FRICTION PLATES					
136A	Direct (.067") (40T)	3-4	89-Up	67106A	35633-32010
136A	Direct (.081") (32T) (Grooved)	3	88-Up	87106AB	35633-32040
136A	Direct (.083") (40T) (Smooth)	3	94-Up	97106	35667-50030
156A	Forward (.060")	5	94-Up	87106A	35633-33010
156A	Forward (.067")	4	88-Up	67106A	35633-32010
244B	2nd Brake (33T) (Grooved)	3	88-91	67100CA	35677-32050
244B	2nd Brake (33T) (Smooth)	3	92-Up	87100CB	35677-33020
244B	2nd Brake (36T)	3-4	94-Up	87100CC	35677-33050
302C	Reverse (33T)	6-7	88-Up	67100B	35677-32060
302C	Reverse (36T)	6	94-Up	87100B	35677-33040
610F	Overdrive Brake (Grooved)	3	88-91	87100A	35677-32070
610F	Overdrive Brake (Smooth)	3	92-Up	87100AA	35677-33010
616F	Overdrive Direct	2-5	88-Up	67106C	35633-32031
N.I.	Differential	11	89-Up	87103A	41475-32020
STEEL PLATES					
134A	Direct (.055") (6T)	1	94-Up	87122BA	35634-33030
134A	Direct (.071") (6 Notched T)	1-3	88-Up	87122AD	35634-32020
134A	Direct (.071") (8T)	2-3	89-Up	67122A	35634-32010
134A	Direct (.078") (6T, 3T are Notched)	2	94-Up	87122BB	35647-33010
134A	Direct (.091") (6T)	2	88-Up	97126	35647-30011
154A	Forward (.055")	1	92-Up	87122AA	35634-33020
154A	Forward (.063")	4	92-Up	87122A	35634-33010
154A	Forward (.071")	2-4	88-Up	67122A	35634-32010
154A	Forward (.078")	5	94-Up	97128	35634-30100
242B	2nd Brake (10T)	3-4	94-Up	87124B	35648-33010
242B	2nd Brake (12 Long Teeth)	3	88-Up	87124A	N.L.
242B	2nd Brake (12 Short Teeth)	3	88-Up	67120B	35648-32010
304C	Reverse (.063") (10T)	6	94-Up	87130AA	35648-33020
304C	Reverse (.071") (12T)	6-7	88-Up	67120C	35648-12020
608F	Overdrive Brake (.071")	3-6	88-Up	67120CA	35648-20010

ILL.		Qty.	Year	Part #	Ref. #
STEEL PLATES (Cont.)					
608F	Overdrive Brake (.098")	3	88-Up	67120CB	35648-32040
618F	Overdrive Direct (.071")	2	94-Up	67122C	35634-20010
618F	Overdrive Direct (.078")	2	94-Up	87122CB	N.L.
618F	Overdrive Direct (.119")	2	89-Up	97122A	34615-20010
PRESSURE PLATES					
158A	Forward (2.6mm)	1	88-Up	67146B	35675-32030
158A	Forward (2.8mm)	1	88-Up	67146BA	35675-17010
158A	Forward (3.0mm)	1	88-Up	67146AA	35675-32010
158A	Forward (3.2mm)	1	88-Up	67146AB	35675-12010
158A	Forward (3.4mm)	1	88-Up	67146A	35675-32020
FILTERS					
512E	A540E, A540H	1	88-Up	87010	35330-32030
512E	A541E	1	94-Up	87010A	35330-33010
FILTER KITS					
N.I.	A540E, A540H	1	88-Up	87011	N.L.
N.I.	A541E	1	94-Up	87011A	N.L.
BANDS					
122A	Band, 1.00" Wide	1	89-Up	67022B	35810-32020
122A	Band, 1.22" Wide	1	94-Up	87022C	35810-33010
122A	Band, 1.50" Wide	1	88-93	87022B	35810-32030
BUSHINGS					
N.I.	Bushing Kit	1	88-Up	87030	N.L.
102A	Pump Body	1	88-Up	57034A	N.L.
110A	Stator Support (Front)	1	88-Up	57036C	N.L.
118A	Stator Support (Rear) (Bushing)	1	88-Up	67037A	N.L.
124A	Direct Drum	1	88-Up	87046A	N.L.
200B	Input Hub	1	88-Up	87050A	N.L.
216B	Sun Gear	2	88-Up	87052A	N.L.
624F	Overdrive Sun Gear (Front)	1	88-Up	67038C	90384-22015
630F	Overdrive Sun Gear (Rear)	1	88-Up	67038CA	90384-22014
THRUST WASHERS/BEARINGS					
WASHERS					
N.I.	Washer Kit	1	88-93	87200A	N.L.
N.I.	Washer Kit	1	94-Up	87200B	N.L.
120A	Stator to Direct Drum	1	88-Up	67211AA	35616-32010
128A	Direct Drum to Forward Drum (.138" Thick)	1	88-Up	67229A	35616-32021
128A	Direct Drum to Forward Drum (.175" Thick)	1	88-Up	87229	35616-32030
224B	Shell to Sprag (A540)	1	88-Up	87244	35739-32020
224B	Shell to Sprag (A541)	1	94-Up	87244A	35739-33010
234B	Rear Planet #2 (Front) (Plastic) (A540)	1	88-93	87241	35738-32020
234B	Rear Planet #2 (Front) (Plastic) (A541)	1	94-Up	87251C	35738-33020
254B	Rear Planet #2 (Rear) (Plastic) (A540)	1	88-93	67241A	35738-12010
254B	Rear Planet #2 (Rear) (Plastic) (A541)	1	94-Up	87251B	35738-33010
552E	Overdrive Planet, Bronze (.060")	1	83-Up	67217A	N.L.
552E	Overdrive Planet, Bronze (.110")	1	83-Up	62717C	N.L.
BEARINGS					
336C	Bearing, Differential (Ring Gear Side)	1	88-Up	87289	90366-50030
408D	Bearing, Pinion Cone w/ Race (Front)	1	88-01	87274B	90366-36003
ELECTRICAL COMPONENTS					
318C	Speed Sensor (VSS) (# 2 Speed Sensor)	1	88-Up	87436	90374-30004
318C	Speed Sensor (VSS) (Speedo) (Camry)	1	97-Up	87436A	N.L.
N.I.	Solenoid Kit (# 1 & # 2 Shift Solenoids & 1 Bracket) (A540E, A540H)	1	88-93	87420BK	85420-32091
N.I.	Solenoid Kit (2 Shift & 1 Lock-Up Solenoid) (A540E, A540H)	1	88-93	87420K	85420-32102
N.I.	Solenoid Kit (# 1 & # 2 Shift Solenoids & 1 Bracket) (A541E)	1	94-Up	87420AK	85420-33010
N.I.	Solenoid Kit (# 1 & # 2 Shift, 1 L-Up Solenoid & 1 Bracket) (A541E)	1	94-Up	87420CK	N.L.
N.I.	Solenoid, Lock-Up (A540E, A540H)	1	88-Up	87425	85420-32110
N.I.	Solenoid, Lock-Up (A541E)	1	94-Up	87425A	N.L.

A540E, A541E

FWD
4 SPEED

ILL.		Qty.	Year	Part #	Ref. #
VALVE BODY RECALIBRATION KITS					
N.I.	Kit, A540E/A540H Valve Body Upgrade	1	88-Up	87165A	TL-540E
VALVE BODY COMPONENTS					
N.I.	Pressure Regulator Valve Kit	1	83-Up	67741P	N.L.
N.I.	Pressure Boost Valve & Sleeve (.565" Large Spool)	1	88-Up	87741EA	N.L.
N.I.	Pressure Boost Valve & Sleeve (.583 Large Spool)	1	88-Up	87741FA	N.L.
PUMPS					
114A	Pump Complete (8.270" OD) (A540)	1	88-Up	87500A	N.L.
114A	Pump Complete (8.460" OD) (A541)	1	88-Up	87500B	N.L.
PUMP COMPONENTS					
112A	Stator (8.270" OD) (A540)	1	88-Up	87520A	35370-33010
112A	Stator (8.460" OD) (A541)	1	88-Up	87520B	35370-33020
DRUMS & COMPONENTS					
126A	Direct (8 Drive Lugs at Shell) (1.00" Wide Band)	1	88-Up	67555CA	35605-32030
126A	Direct (8 Drive Lugs at Shell) (1.22" Wide Band)	1	88-Up	87555	N.L.
148A	Forward w/ Shaft (3 Ring, 4 Clutch)	1	88-Up	87554	N.L.
148A	Forward w/ Shaft (3 Ring, 5 Clutch)	1	88-Up	87554A	N.L.
148A	Forward w/ Shaft (2 Ring, 4 Clutch)	1	88-Up	67554C	35701-32031
626F	Overdrive Direct (22T Sun Gear)	1	88-Up	87551A	N.L.
626F	Overdrive Direct (27T Sun Gear)	1	88-Up	87551E	N.L.
626F	Overdrive Direct (28T Sun Gear)	1	88-Up	87551D	N.L.
PLANETS AND COMPONENTS					
212B	Planet, Front (w/o Step)	1	88-Up	67582A	35720-32010
212B	Planet, Front (w/ Step)	1	88-Up	87582	N.L.
252B	Planet, Rear (4 Gear) (1.790" Overall Height)	1	88-Up	67584A	N.L.
252B	Planet, Rear (4 Gear) (1.885" Overall Height)	1	88-Up	87584	N.L.
252B	Planet, Rear (5 Gear)	1	88-Up	87584A	N.L.
258B	Ring Gear, Rear (1.100" Thick)	1	88-Up	67594	N.L.
258B	Ring Gear & Hub, Rear (1.100" Thick)	1	88-Up	67594K	N.L.
258B	Ring Gear, Rear (1.165" Thick)	1	88-Up	87594	N.L.
550E	Planet, Overdrive w/ Shaft (22T Sun Gear)	1	88-Up	87580A	N.L.
550E	Planet, Overdrive w/ Shaft (28T Sun Gear)	1	88-Up	87580D	N.L.
SUN GEARS					
218B	Sun Gear, Front (27 Teeth, 1.465" OD Sprag Race)	1	88-Up	67612B	35706-32012
218B	Sun Gear, Front (27 Teeth, 1.540" OD Sprag Race)	1	88-Up	87612	N.L.
ONE WAY CLUTCHES					
228B	Intermediate (w/ outer race) (33T) (A540)	1	88-Up	87642	35790-32031
228B	Intermediate (w/outer race) (36T) (A541)	1	88-Up	87642B	N.L.
230B	Intermediate (Sprag Only)	1	88-Up	87652	N.L.
250B	Low Clutch (20 Elements)	1	88-Up	67654A	35792-32020
250B	Low Clutch (30 Elements)	1	88-Up	87654	N.L.
556E	Overdrive	1	88-Up	67650C	34714-32021
SHELLS & SUPPORTS					
222B	Shell, Input Sun (39 Inner T) (8 Drive Lugs)	1	88-Up	67622A	35790-32050
VALVE BODIES & GOVERNORS					
524E	Valve Body (A540E) (3 Solenoid w/Tube)	1	88-Up	87740-1	N.L.
524E	Valve Body (A540E) (3 Solenoid w/o Tube)	1	88-Up	87740-2	N.L.
524E	Valve Body (4 Solenoid AWD)	1	88-Up	87740-3	N.L.
524E	Valve Body (A541E) (4 Solenoid w/Tube)	1	94-Up	87740-4	N.L.
MISCELLANEOUS COMPONENTS					
420D	Crush Sleeve (.940" Long)	1	88-Up	87696	41231-32020
420D	Crush Sleeve (1.565" Long)	1	88-Up	87696A	41231-33010
638F	Rear Cover, Overdrive 13 Bolts w/ 4 Mounting Holes	1	88-Up	87759B	N.L.
638F	Rear Cover, Overdrive 14 Bolts w/ 4 Mounting Holes	1	88-Up	87759CA	N.L.
TECHNICAL MANUALS					
N.I.	Tech Manual	1	88-Up	87400	N.L.

RWD
5 SPEED

A650E

ILL.		Qty.	Year	Part #	Ref. #
MASTER OVERHAUL KITS (WITH STEELS)					
N.I.	A650E (Exc. GS300)	1	98-Up	187006	N.L.
N.I.	A650E (GS300)	1	98-Up	187006A	N.L.
MASTER OVERHAUL KITS (LESS STEELS)					
N.I.	A650E (Exc. GS300)	1	98-Up	187004	N.L.
N.I.	A650E (GS300)	1	98-Up	187004A	N.L.
OVERHAUL KITS (WITH RINGS AND SEALS)					
N.I.	A650E	1	98-Up	187002	N.L.
GASKETS & O-RINGS					
N.I.	Gasket, Pan	1	98-Up	97300	N.L.
N.I.	Gasket Package, Valve Body	1	98-Up	187320K	N.L.
METAL CLAD SEALS					
N.I.	Seal, Pump	1	98-Up	57070A	90311-38029
FRICTION PLATES					
N.I.	Overdrive Brake	3-4	98-Up	97100	34633-50010
N.I.	Overdrive Direct	2	98-Up	97102	35633-30040
N.I.	3rd Brake	5	98-Up	187103	N.L.
N.I.	2nd Brake	5	98-Up	187104	N.L.
N.I.	Direct	5	98-Up	187106	N.L.
N.I.	Forward	5-6	98-Up	97108B	35677-50010
N.I.	Low/ Reverse	5-6	98-Up	187114	35683-30010
STEEL PLATES					
N.I.	Overdrive Brake	2-3	98-Up	97120C	34634-30021
N.I.	Overdrive Direct (.079")	1-2	98-Up	97122	34616-30010
N.I.	Overdrive Direct (.098")	1	98-Up	97122C	3549181-0
N.I.	3rd Brake	5	98-Up	187123	N.L.
N.I.	2nd Brake (.106")	4	98-Up	187124	N.L.
N.I.	2nd Brake (.079")	1	98-Up	187124A	N.L.
N.I.	Direct	5	98-Up	187126	N.L.
N.I.	Forward (.071")	5	98-Up	67122A	35634-32010
N.I.	Forward (.055")	1	98-Up	87122AA	35634-33020
N.I.	Forward (.091")	5	98-Up	97128C	35634-30110
N.I.	Low/ Reverse	4-5	98-Up	187134	35693-30010
FILTERS					
N.I.	Filter (Late 98-Up)	1	98-Up	187010B	35330-30050
FILTER KITS					
N.I.	Filter Kit	1	98-Up	187011B	N.L.
BANDS					
N.I.	Brake Band	1	98-Up	97022	35810-30020
ELECTRICAL COMPONENTS					
N.I.	Solenoid, EPC	1	98-01	187431	N.L.
N.I.	Solenoid, Lock-Up (TCC)	1	98-01	187425	N.L.
N.I.	Solenoid, Shift Control	1	98-01	187428	N.L.

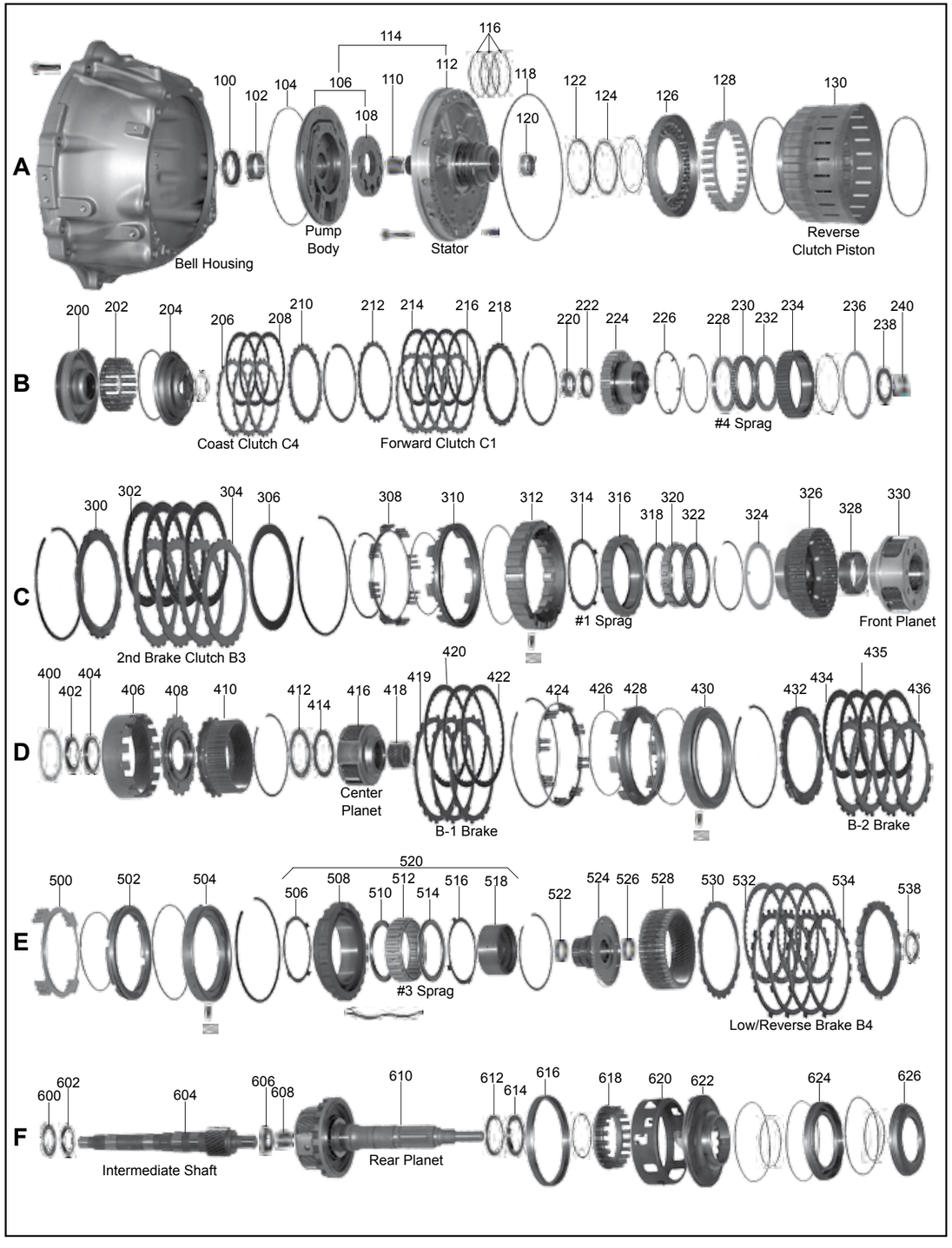
A
B
C
D
E
F
Bell Housing
Pump Body
Stator
Reverse Clutch Piston
Coast Clutch C4
Forward Clutch C1
#4 Sprag
2nd Brake Clutch B3
#1 Sprag
Front Planet
Center Planet
B-1 Brake
B-2 Brake
#3 Sprag
Low/Reverse Brake B4
Intermediate Shaft
Rear Planet

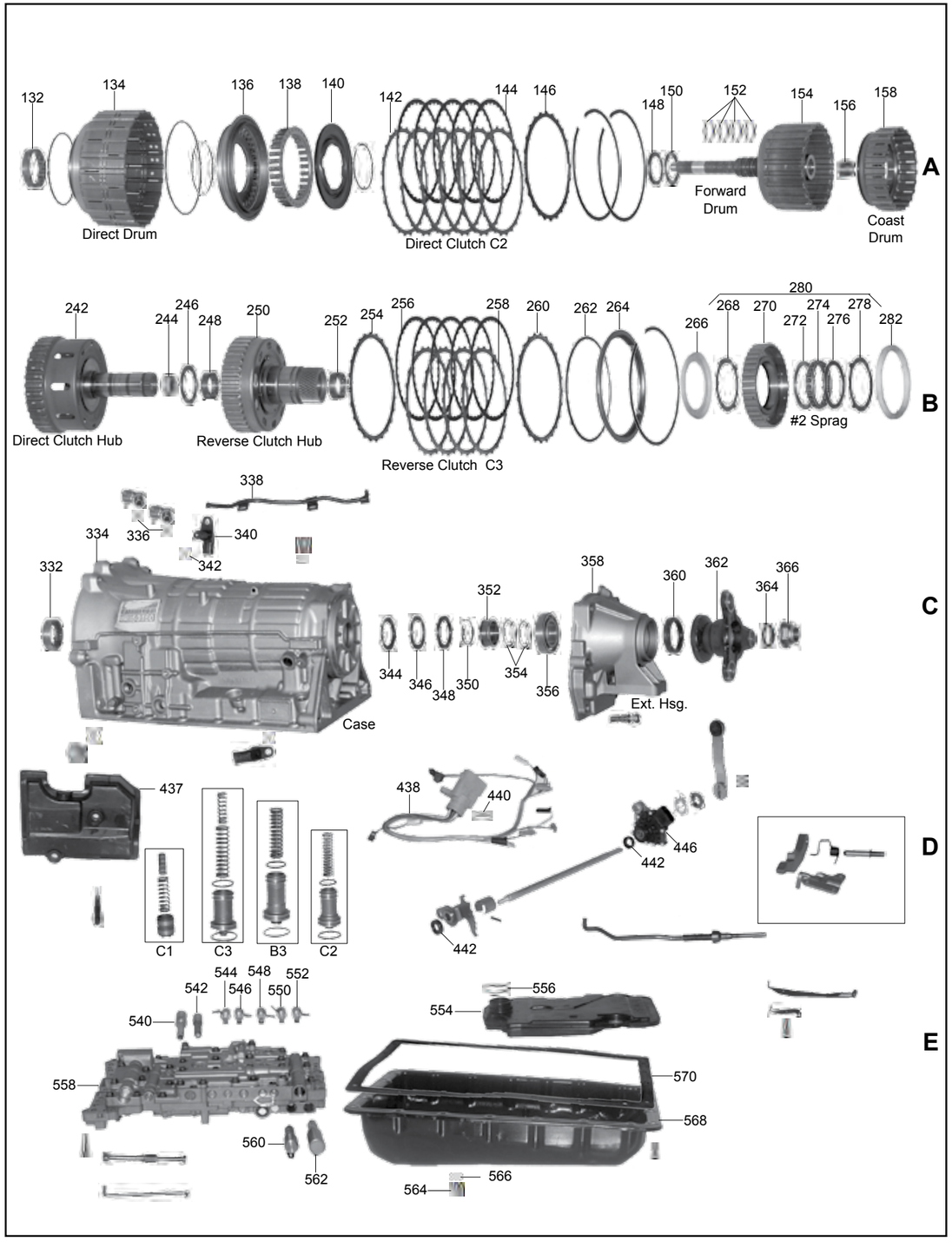
A
B
C
D
E
Direct Drum
Direct Clutch C2
Forward Drum
Coast Drum
Direct Clutch Hub
Reverse Clutch Hub
Reverse Clutch C3
#2 Sprag
Case
Ext. Hsg.
C1
C3
B3
C2

ILL.		Qty.	Year	Part #	Ref. #
MASTER OVERHAUL KITS (WITH STEELS)					
N.I.	A750E, A750F	1	03-Up	117006	N.L.
N.I.	A760E, A760H, A761E	1	04-Up	117006A	N.L.
N.I.	A960E	1	06-08	117006D	N.L.
MASTER OVERHAUL KITS (LESS STEELS)					
N.I.	A750E, A750F	1	03-Up	117004	N.L.
N.I.	A760E, A760H, A761E	1	04-Up	117004A	N.L.
N.I.	A960E	1	06-08	117004D	N.L.
OVERHAUL KITS (WITH RINGS AND SEALS)					
N.I.	A750E, A750F	1	03-Up	117002	N.L.
N.I.	A760E, A760H, A761E	1	04-Up	117002A	N.L.
N.I.	A960E	1	06-08	117002D	N.L.
BONDED PISTONS					
140A	Retainer, Piston (Bonded) C2 (Direct) (A750, A760)	1	03-Up	117985	N.L.
158A	Drum, Coast C4 (C1 Piston) (Bonded) (A760)	1	04-Up	117962	N.L.
200B	Piston, (Bonded) C4 (Coast) (A760)	1	04-Up	117969	N.L.
GASKETS & O-RINGS					
570E	Gasket, Pan (A750, A760)	1	03-Up	117300	N.L.
N.I.	Gasket Package, Valve Body (A750)	1	03-Up	117320K	N.L.
N.I.	Gasket Package, Valve Body (A760)	1	04-Up	117320AK	N.L.
METAL CLAD SEALS					
100A	Pump (A750, A760)	1	03-Up	57070A	90311-38077
360C	Extension Housing (A750E)	1	03-Up	97074	90311-40001
360C	Extension Housing (A760)	1	04-Up	97074C	90311-42024
360C	Extension Housing (A750F) (4wd)	1	03-Up	97074A	90311-48106
442D	Manual Lever Shaft (A750, A760)	1	03-Up	60072	91209-612-003
SEALING RINGS & KITS					
N.I.	Sealing Ring Kit (A750E, A750F)	1	03-Up	117006K	N.L.
N.I.	Sealing Ring Kit (A760E, A760H, A761E)	1	04-Up	117006AK	N.L.
N.I.	Sealing Ring Kit (A960E)	1	06-08	117006DK	N.L.
FRICTION PLATES					
144A	C2 (A750, A760)	5-6	03-Up	117106	N.L.
208B	C4 (A760)	3	04-Up	117116	N.L.
214B	C1 (A750)	6-7	03-Up	117108	N.L.
214B	C1 (A760)	4	04-Up	117108A	N.L.
256B	C3 (A750, A760)	5	03-Up	117110	N.L.
302C	B3 (A750, A760)	4	03-Up	117104	N.L.
420D	B1 (A750, A760)	3-4	03-Up	117100	N.L.
434D	B2 (A750, A760)	3	03-Up	117112	N.L.
532E	B4 (A750, A760)	8	03-Up	117114	N.L.
STEEL PLATES					
142A	C2 (A750, A760)	6	03-Up	117126	N.L.
206B	C4 (A760)	3	04-Up	117136	N.L.
216B	C1 (A750)	5-6	03-Up	117128	N.L.
216B	C1 (A760)	4	04-Up	117128A	N.L.
258B	C3 (A750, A760)	4	03-Up	117130	N.L.
304C	B3 (A750, A760)	4	03-Up	117124	N.L.
422D	B1 (A750, A760)	3-4	03-Up	117120	N.L.
435D	B2 (A750, A760)	3	03-Up	117132	N.L.
534E	B4 (A750, A760)	7	03-Up	117134	N.L.
PRESSURE PLATES					
146A	C2 Backing (A750, A760)	1	03-Up	117146	N.L.
210B	C4 Backing (A760)	1	04-Up	117156A	N.L.
218B	C1 Backing (A750, A760)	1	03-Up	117148	N.L.
254B	C3 Apply (A750, A760)	1	03-Up	117151	N.L.
260B	C3 Backing (A750, A760)	1	03-Up	117150	N.L.
300C	B3 Backing (A750, A760)	1	03-Up	117144	N.L.
306C	B3 Apply (A750, A760)	1	03-Up	117145	N.L.

ILL.		Qty.	Year	Part #	Ref. #
PRESSURE PLATES (Cont.)					
419D	B1 Backing (A750, A760)	1	03-Up	117140	N.L.
432D	B2 Backing (A750, A760)	1	03-Up	117152	N.L.
436D	B2 Apply (A750, A760)	1	03-Up	117153	N.L.
530E	B4 Backing (A750, A760)	1	03-Up	117154	N.L.
FILTERS					
554E	A750E, A750F	1	03-Up	117010	35330-60050
554E	A760E, A760H, A761E	1	04-Up	117010A	35330-50020
554E	A960E	1	06-08	117010D	N.L.
FILTER KITS					
N.I.	A750E, A750F	1	03-Up	117011	N.L.
N.I.	A760E, A760H, A761E	1	04-Up	117011A	N.L.
N.I.	A960E	1	06-08	117011D	N.L.
BUSHINGS					
N.I.	Bushing Kit (A750, A760)	1	03-Up	117030A	N.L.
102A	Pump (A750, A760)	1	03-Up	570034A	N.L.
N.I.	Extension Housing (A750, A760)	1	03-Up	97066	N.L.
ELECTRICAL COMPONENTS					
N.I.	Solenoid, Linear (SL2) (A750)	1	03-Up	117420	35220-60010
N.I.	Solenoid, Linear (SL2) (A760)	1	04-Up	117420B	35210-50010
N.I.	Solenoid (SR) (A750)	1	03-Up	117421	35230-60010
N.I.	Solenoid (SR) (A760)	1	04-Up	117421B	35240-50060
N.I.	Solenoid (S2) (A750)	1	03-Up	117422	35250-60010
N.I.	Solenoid (S2) (A760)	1	04-Up	117422B	35240-50050
N.I.	Solenoid (S1) (A750)	1	03-Up	117423	35240-60010
N.I.	Solenoid (S1) (A760)	1	04-Up	117423B	35240-50030
N.I.	Solenoid (S3) (A760)	1	04-Up	117423B	35250-50030
N.I.	Solenoid, Linear (SLU) (A750)	1	03-Up	117425	35280-60010
N.I.	Solenoid, Linear (SLU) (A760)	1	04-Up	117425B	35280-50020
N.I.	Solenoid (S4) (A760)	1	04-Up	117426B	35240-50040
N.I.	Solenoid, Linear (SLT) (A750)	1	03-Up	117428	35290-60030
N.I.	Solenoid, Linear (SLT) (A760)	1	04-Up	117428B	35290-50010
N.I.	Solenoid, Linear (SL1) (A750)	1	03-Up	117435	35210-60010
N.I.	Solenoid, Linear (SL1) (A760)	1	04-Up	117420B	35210-50010
370C	Sensor, Input & Output (A750)	2	03-Up	117436	89413-32010
370C	Sensor, Input & Output (A760)	2	04-Up	117436B	89413-32010
438D	Connector w/ Harness (A750)	1	03-Up	117446	82125-35130
438D	Connector w/ Harness (A760)	1	04-Up	117446B	82125-50070
VALVE BODY RECALIBRATION KITS					
N.I.	Valve Body Kit, Lexus (A761E)	1	04-08	117165A	RT-A761E
PUMPS					
106A	Pump Body w/ Gears (A750, A760)	1	03-Up	117510	N.L.
114A	Pump Assembly (A750, A760)	1	03-Up	117500	N.L.
PUMP COMPONENTS					
108A	Pump Gears (9T Inner Gear) (A750, A760)	1	03-Up	117530	N.L.
112A	Pump Stator (A750, A760)	1	03-Up	117520	N.L.
DRUMS & COMPONENTS					
128A	Retainer w/ Springs,C3 (Reverse) (A750)	1	03-Up	117976	N.L.
128A	Retainer w/ Springs,C3 (Reverse) (A760)	1	04-Up	117976A	N.L.
130A	Piston,C3 (Reverse) (A750, A760)	1	03-Up	117966	N.L.
134A	Drum, C2 (Direct) (A750, A760)	1	03-Up	117555	N.L.
136A	Piston, C2 (Direct) (A750, A760)	1	03-Up	117965	N.L.
138A	Retainer w/ Springs, C2 (Direct) (32 Springs) (A750, A760)	1	03-Up	117975	N.L.
140A	Retainer, Piston (Bonded) C2 (Direct) (A750, A760)	1	03-Up	117985	N.L.
154A	Drum, C1 (Forward) (9.750" Tall) (A750)	1	03-Up	117554	N.L.
154A	Drum, C1 (Forward) (10" Tall) (A760)	1	04-Up	117554A	N.L.
158A	Drum, Coast C4 (C1 Piston) (Bonded) (A760)	1	04-Up	117962	
200B	Piston, (Bonded) C4 (Coast) (A760)	1	04-Up	117969	N.L.
200B	Piston, C1 (Forward) (A750)	1	04-Up	117968A	N.L.

ILL.		Qty.	Year	Part #	Ref. #
DRUMS & COMPONENTS (Cont.)					
202B	Retainer w/ Springs, C1 (Forward) (18 Springs) (A750)	1	03-Up	117979	N.L.
202B	Retainer w/ Springs, C1 (Forward) (20 Springs) (A760)	1	04-Up	117979A	N.L.
212B	Cushion, C1 (Forward) (A761E)	1	04-Up	117853A	N.L.
224B	Hub w/ Race, C4 (Coast) (A760)	1	04-Up	117579A	N.L.
242B	Hub w/ Shaft, C2 (Direct) (A750, A760)	1	03-Up	117575	N.L.
262B	Cushion,C3 (Reverse) (A750, A760)	1	03-Up	117856	N.L.
308C	Retainer w/ Springs, B3 (2nd Brake) (A750, A760)	1	03-Up	117974	N.L.
310C	Piston, B3 (2nd Brake) (A750, A760)	1	03-Up	117964	N.L.
424D	Retainer w/ Springs, B1 (16 Springs) (A750, A760)	1	03-Up	117970	N.L.
428D	Piston, B1 (A750, A760)	1	03-Up	117960	N.L.
500E	Retainer w/ Springs, B2 (18 Springs) (A750)	1	03-Up	117972	N.L.
500E	Retainer w/ Springs, B2 (20 Springs) (A760)	1	04-Up	117972A	N.L.
502E	Piston, B2 (.570" Thick) (A750)	1	03-Up	117962	N.L.
502E	Piston, B2 (.450" Thick) (A760)	1	04-Up	117962A	N.L.
618F	Retainer w/ Springs, B4 (Low/ Reverse) (20 Springs) (A750, A760)	1	03-Up	117977	N.L.
PLANETS AND COMPONENTS					
330C	Planet, Front (A750)	1	03-Up	117582	N.L.
330C	Planet, Front (A760)	1	04-Up	117582A	N.L.
406D	Ring Gear, Front (91T, No Lugs) (A750)	1	03-Up	117592	N.L.
406D	Ring Gear, Front (91T, 16 Lugs) (A760)	1	04-Up	117592A	N.L.
410D	Ring Gear, Center (77T) (A750)	1	03-Up	117590	N.L.
410D	Ring Gear, Center (78T) (A760)	1	04-Up	117590A	N.L.
416D	Planet, Center (30T sun gear type) (A750)	1	03-Up	117580	N.L.
416D	Planet, Center (33T Sun Gear Type) (A760)	1	04-Up	117580A	N.L.
528E	Ring Gear, Rear (63T) (A750)	1	03-Up	117594	N.L.
528E	Ring Gear, Rear (62T) (A760)	1	04-Up	117594A	N.L.
610F	Planet, Rear (13" Long) (A750)	1	03-Up	117584	N.L.
610F	Planet, Rear (6.300" Long) (A750)	1	03-Up	117584A	N.L.
610F	Planet, Rear (11.300" Long) (A760)	1	04-Up	117584B	N.L.
SUN GEARS					
418D	Sun Gear, Center (30T) (A750)	1	03-Up	117610	N.L.
418D	Sun Gear, Center (33T) (A760)	1	04-Up	117610A	N.L.
604F	Sun Gear, Rear w/ Shaft (1.730" OD) (A750)	1	03-Up	117614	N.L.
604F	Sun Gear, Rear w/ Shaft (1.860" OD) (A760)	1	04-Up	117614A	N.L.
ONE WAY CLUTCHES					
230B	Sprag, F4 (A760)	1	04-Up	117658A	N.L.
274B	Sprag, F2 (A750)	1	03-Up	117652	N.L.
274B	Sprag, F2 (A760)	1	04-Up	117652A	N.L.
320C	Sprag, F1 (A750)	1	03-Up	117656	N.L.
320C	Sprag, F1 (A760)	1	04-Up	117656A	N.L.
512E	Sprag, F3 (A750)	1	03-Up	117654	N.L.
512E	Sprag, F3 (A760)	1	04-Up	117654A	N.L.
SHELLS & SUPPORTS					
250B	Shell w/ Sun Gear, Front (Reverse) (40T) (A750)	1	03-Up	117622	N.L.
250B	Shell w/ Sun Gear, Front (Reverse) (43T) (A760)	1	04-Up	117622A	N.L.
VALVE BODIES & GOVERNORS					
558E	Valve Body (7 Solenoids) (A750)	1	03-Up	117740-1	N.L.
558E	Valve Body (9 Solenoids) (A760)	1	04-Up	117740-2	N.L.
CASES/HOUSINGS & COMPONENTS					
334C	Case (A750)	1	03-Up	117760	N.L.
334C	Case (A760)	1	04-Up	117760A	N.L.
358C	Extension Housing (2wd) (A750)	1	03-Up	117770	N.L.
358C	Extension Housing (4wd) (A750)	1	03-Up	117770A	N.L.
358C	Extension Housing (A760)	1	04-Up	117770B	N.L.
568E	Bottom Pan (Drain Plug on Bottom) (A750)	1	03-Up	117765	N.L.
568E	Bottom Pan (Drain Plug on Side) (A760)	1	04-Up	117765A	N.L.

ILL.		Qty.	Year	Part #	Ref. #
MISCELLANEOUS COMPONENTS					
312C	Piston Support, B3 (2nd Brake) (A750, A760)	1	03-Up	117954	N.L.
430D	Piston Support, B1 (A750, A760)	1	03-Up	117950	N.L.
504E	Piston Support, B2 (A750, A760)	1	03-Up	117952	N.L.
620F	Apply Ring, B4 (Low/ Reverse) (A750)	1	03-Up	117549	N.L.
620F	Apply Ring, B4 (Low/ Reverse) (A760)	1	04-Up	117549A	N.L.
622F	Piston, B4 (Low/ Reverse) (2" Thick) (A750)	1	03-Up	117967	N.L.
622F	Piston, B4 (Low/ Reverse) (1.700" Thick) (A760)	1	04-Up	117967A	N.L.
624F	Piston Sleeve, B4 (Low/ Reverse) (Large Type) (A750)	1	03-Up	117967H	N.L.
624F	Piston Sleeve, B4 (Low/ Reverse) (Large Type) (A760)	1	04-Up	117967J	N.L.
626F	Piston, B4 (Low/ Reverse) (Small Type) (A750)	1	03-Up	117967D	N.L.
626F	Piston, B4 (Low/ Reverse) (Small Type) (A760)	1	04-Up	117967E	N.L.

Notes

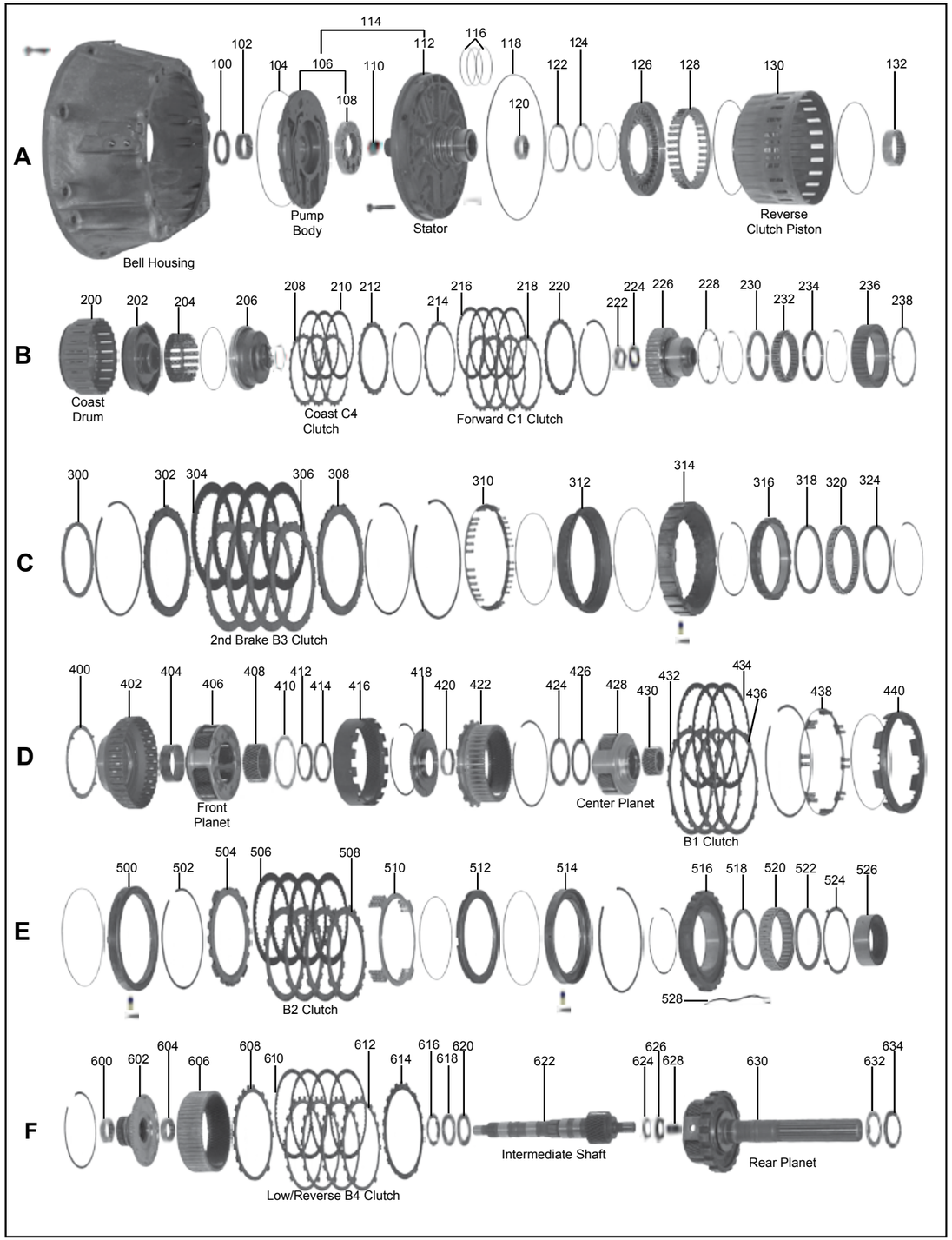
A
100 102 104 106 108 110 112 114 116 118 120 122 124 126 128 130 132
Bell Housing
Pump Body
Stator
Reverse Clutch Piston
B
200 202 204 206 208 210 212 214 216 218 220 222 224 226 228 230 232 234 236 238
Coast Drum
Coast C4 Clutch
Forward C1 Clutch
C
300 302 304 306 308 310 312 314 316 318 320 324
2nd Brake B3 Clutch
D
400 402 404 406 408 410 412 414 416 418 420 422 424 426 428 430 432 434 436 438 440
Front Planet
Center Planet
B1 Clutch
E
500 502 504 506 508 510 512 514 516 518 520 522 524 526 528
B2 Clutch
F
600 602 604 606 608 610 612 614 616 618 620 622 624 626 628 630 632 634
Intermediate Shaft
Rear Planet
Low/Reverse B4 Clutch

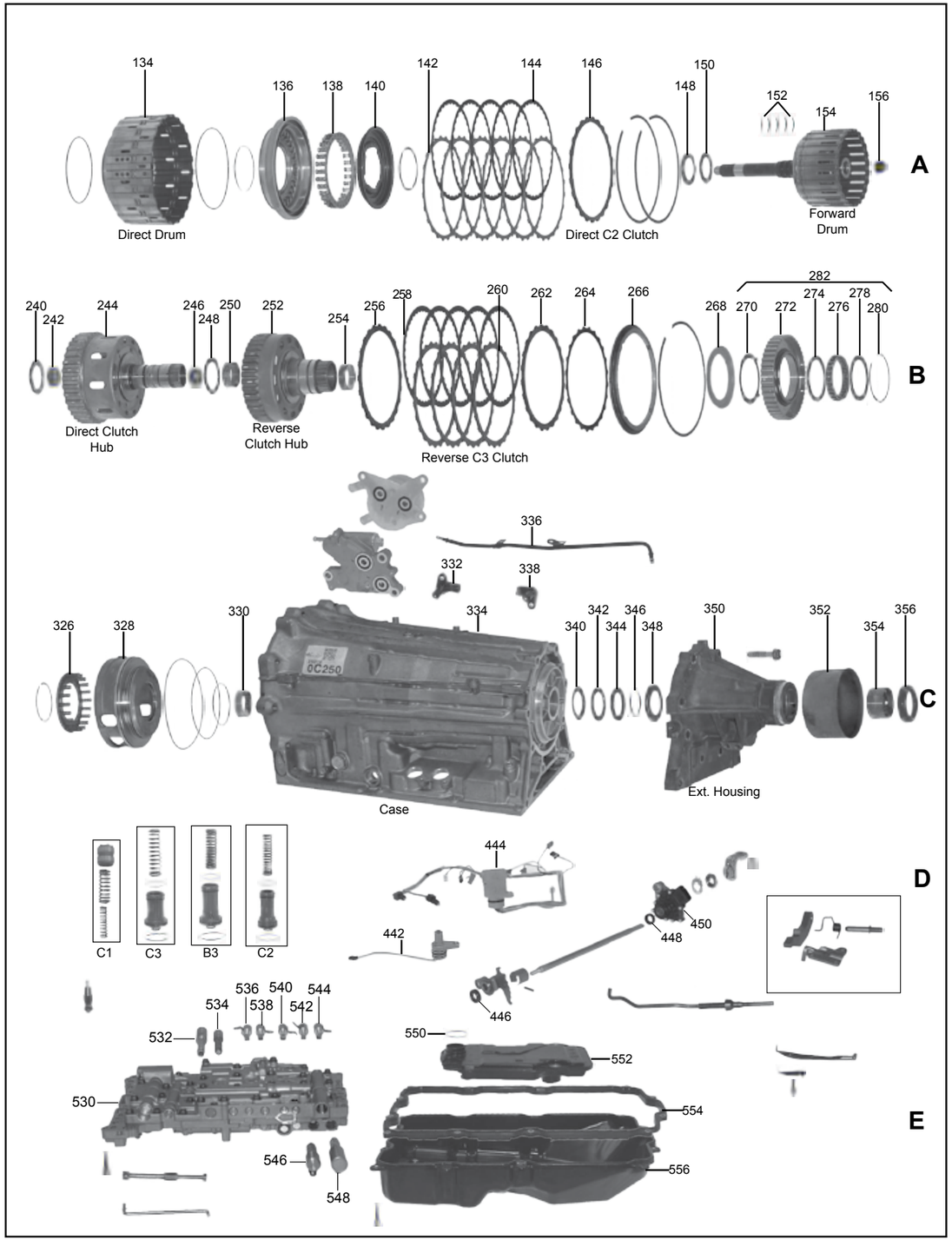
A
134 136 138 140 142 144 146 148 150 152 154 156
Direct Drum
Direct C2 Clutch
Forward Drum
B
240 242 244 246 248 250 252 254 256 258 260 262 264 266 268 270 272 274 276 278 280 282
Direct Clutch Hub
Reverse Clutch Hub
Reverse C3 Clutch
C
326 328 330 332 334 336 338 340 342 344 346 348 350 352 354 356
Case
Ext. Housing
D
C1 C3 B3 C2
442 444 446 448 450
E
530 532 534 536 538 540 542 544 546 548 550 552 554 556

ILL.		Qty.	Year	Part #	Ref. #
MASTER OVERHAUL KITS (WITH STEELS)					
N.I.	AB60E	1	07-Up	77006	N.L.
MASTER OVERHAUL KITS (LESS STEELS)					
N.I.	AB60E	1	07-Up	77004	N.L.
OVERHAUL KITS (WITH RINGS AND SEALS)					
N.I.	AB60E	1	07-Up	77002	N.L.
BONDED PISTONS					
140A	Retainer, Piston (Bonded) C2 (Direct)	1	07-Up	77985	N.L.
200B	Drum, Coast C4 (C1 Piston) (Bonded) (A760)	1	07-Up	77962	N.L.
202B	Piston, (Bonded) C4 (Coast) (A760)	1	07-Up	77969	N.L.
GASKETS & O-RINGS					
104A	O-Ring, Pump (Small)	1	07-Up	77311	N.L.
118A	O-Ring, Pump (Large)	1	07-Up	77311A	N.L.
554E	Gasket, Pan	1	07-Up	77300	N.L.
METAL CLAD SEALS					
100A	Pump	1	07-Up	77070	N.L.
356C	Extension Housing (2wd)	1	07-Up	77074	N.L.
356C	Extension Housing (4wd)	1	07-Up	77074A	N.L.
446D	Manual Lever	1	07-Up	77072	N.L.
SEALING RINGS & KITS					
N.I.	Sealing Ring Kit	1	07-Up	77175K	N.L.
FRICTION PLATES					
144A	C2 (Direct)	5	07-Up	77106	N.L.
210B	C4 (Coast)	4	07-Up	77116	N.L.
216B	C1 (Forward)	6	07-Up	77108	N.L.
258B	C3 (Reverse)	5	07-Up	77110	N.L.
304C	B3 (2nd Brake)	4	07-Up	77104	N.L.
434D	B1	4	07-Up	77100	N.L.
506E	B2	7	07-Up	77112	N.L.
610F	B4 (Low/ Reverse)	4	07-Up	77114	N.L.
STEEL PLATES					
142A	C2 (Direct)	6	07-Up	77126	N.L.
208B	C4 (Coast)	4	07-Up	77136	N.L.
218B	C1 (Forward)	6	07-Up	77128	N.L.
260B	C3 (Reverse)	4	07-Up	77130	N.L.
306C	B3 (2nd Brake)	3	07-Up	77124	N.L.
436D	B1	4	07-Up	77120	N.L.
508E	B2	6	07-Up	77132	N.L.
612F	B4 (Low/ Reverse)	3	07-Up	77134	N.L.
PRESSURE PLATES					
146A	C2	1	07-Up	77146	N.L.
212B	C4	1	07-Up	77156	N.L.
220B	C1 (Backing)	1	07-Up	77148	N.L.
256B	C3 (Backing)	1	07-Up	77150	N.L.
262B	C3 (Apply)	1	07-Up	77151	N.L.
302C	B3 (Backing)	1	07-Up	77144	N.L.
308C	B3 (Apply)	1	07-Up	77145	N.L.
432D	B1	1	07-Up	77140	N.L.
504E	B2 (Backing)	1	07-Up	77152	N.L.
608F	B4 (Backing)	1	07-Up	77154	N.L.
614F	B4 (Apply)	1	07-Up	77155	N.L.
N.I.	B2 (Apply)	1	07-Up	77145	N.L.
FILTERS					
552E	AB60E	1	07-Up	77010	N.L.

ILL.		Qty.	Year	Part #	Ref. #
FILTER KITS					
N.I.	AB60E	1	07-Up	77011	N.L.
BUSHINGS					
N.I.	Bushing Kit	1	07-Up	77030	N.L.
102A	Pump	1	07-Up	77034	N.L.
354C	Extension Housing	1	07-Up	77066	N.L.
ELECTRICAL COMPONENTS					
338C	Sensor, Input & Output	2	07-Up	77436	89413-0C020
444D	Connector w/ Harness (01/07 to 11/07)	1	07-E07	77446	82125-34020
N.I.	Solenoid, Linear (SL2)	1	07-Up	117420B	35210-50010
N.I.	Solenoid (SR)	1	07-Up	117421B	35240-50060
N.I.	Solenoid (S2)	1	07-Up	117422B	35240-50050
N.I.	Solenoid (S1)	1	07-Up	117423B	35240-50030
N.I.	Solenoid (S3)	1	07-Up	117423B	35250-50030
N.I.	Solenoid, Linear (SLU)	1	07-Up	77425	35290-34010
N.I.	Solenoid (S4)	1	07-Up	117426B	35240-50040
N.I.	Solenoid, Linear (SLT)	1	07-Up	77425	35290-34010
N.I.	Solenoid, Linear (SL1)	1	07-Up	117420B	35210-50010
PUMPS					
106A	Pump Body w/ Gears	1	07-Up	77510	N.L.
114A	Pump Assembly	1	07-Up	77500	N.L.
PUMP COMPONENTS					
108A	Pump Gears	1	07-Up	77530	N.L.
112A	Pump Stator	1	07-Up	77520	N.L.
DRUMS & COMPONENTS					
128A	Retainer w/ Springs, C3 (Reverse)	1	07-Up	77976	N.L.
130A	Piston, C3 (Reverse)	1	07-Up	77966	N.L.
134A	Drum, C2 (Direct)	1	07-Up	77555	N.L.
136A	Piston, C2 (Direct)	1	07-Up	77965	N.L.
138A	Retainer w/ Springs, C2 (Direct)	1	07-Up	77975	N.L.
140A	Retainer, Piston (Bonded) C2 (Direct)	1	07-Up	77985	N.L.
154A	Drum, C1 (Forward)	1	07-Up	77554	N.L.
200B	Drum, Coast C4 (C1 Piston) (Bonded) (A760)	1	07-Up	77962	N.L.
202B	Piston, (Bonded) C4 (Coast) (A760)	1	07-Up	77969	N.L.
204B	Retainer w/ Springs, C1 (Forward)	1	07-Up	77979	N.L.
214B	Cushion, C1 (Forward)	1	07-Up	77853	N.L.
226B	Hub w/ Race, C4 (Coast)	1	07-Up	77579	N.L.
244B	Hub w/ Shaft, C2 (Direct)	1	07-Up	77575	N.L.
264B	Cushion, C3 (Reverse)	1	07-Up	77856	N.L.
310C	Retainer w/Springs, B3 (2nd Brake)	1	07-Up	77974	N.L.
312C	Piston, B3 (2nd Brake)	1	07-Up	77964	N.L.
326C	Retainer w/ Springs, B4 (Low/Reverse)	1	07-Up	77977	N.L.
328C	Piston, B4 (Low/Reverse)	1	07-Up	77967	N.L.
438D	Retainer w/ Springs, B1	1	07-Up	77970	N.L.
440D	Piston, B1	1	07-Up	77960	N.L.
510E	Retainer w/ Springs, B2	1	07-Up	77972	N.L.
512E	Piston, B2	1	07-Up	77962	N.L.
PLANETS AND COMPONENTS					
406D	Planet, Front	1	07-Up	77582	N.L.
416D	Ring Gear, Front	1	07-Up	77592	N.L.
422D	Ring Gear, Center	1	07-Up	77590	N.L.
428D	Planet, Center	1	07-Up	77580	N.L.
606F	Ring Gear, Rear	1	07-Up	77594	N.L.
630F	Planet, Rear	1	07-Up	77584C	N.L.
SUN GEARS					
408D	Sun Gear (Front)	1	07-Up	77612	N.L.
430D	Sun Gear, Center	1	07-Up	77610	N.L.
622F	Sun Gear, Rear w/ Shaft	1	07-Up	77614	N.L.

ILL.		Qty.	Year	Part #	Ref. #
ONE WAY CLUTCHES					
232B	Sprag, F4	1	07-Up	77658	N.L.
276B	Sprag, F2	1	07-Up	77652	N.L.
320C	Sprag, F1	1	07-Up	77656	N.L.
520E	Sprag, F3	1	07-Up	77654	N.L.
SHELLS & SUPPORTS					
252B	Sun Gear Shell	1	07-Up	77622	N.L.
VALVE BODIES & GOVERNORS					
530E	Valve Body	1	07-Up	77740-1	N.L.
CASES/HOUSINGS & COMPONENTS					
334C	Case	1	07-Up	77760	N.L.
350C	Extension Housing (2wd)	1	07-Up	77770	N.L.
350C	Extension Housing (4wd)	1	07-Up	77770A	N.L.
556E	Bottom Pan	1	07-Up	77765	N.L.
MISCELLANEOUS COMPONENTS					
314C	Piston Support, B3 (2nd Brake)	1	07-Up	77954	N.L.
500E	Piston Support, B1	1	07-Up	77950	N.L.
514E	Piston Support, B2	1	07-Up	77952	N.L.

Notes

TK TOLEDO TRANS-KIT · BRYCO · ProSELECT · RoadMaster

SEAL AFTERMARKET PRODUCTS
your source for engineered solutions

PRODUCT ANNOUNCEMENT

U760E (FWD 6 Speed) 2008-Up

Seal Aftermarket Products now has the Overhaul Kit for the U760E transmission series covering 2008-Up. **Please call your Sales Representative for pricing and availability**

Innovative Engineered Solutions

- Direct Clutch, Rear Cover & Intermediate Shaft Plastic Sealing Rings
- Valve Body Screen Filter Included



Vehicle Coverage

Toyota
- ►Venza 2008-Up [I4 2.7L]
- ►Highlander 2008-Up [I4 2.7L]
- ►Camry 2009-Up [I4 2.4L & 2.5L]
- ►Rav4 2011-Up [I4 2.0L & 2.2L]

Rebuild Kits

Available Now
277002A - Overhaul Kit U760E (W/Out Pistons) 2008-Up

To Be Announced
277004A - Master L/Steels Kit U760E (W/Out Pistons) 2008-Up
277006A - Master W/Steels Kit U760E (W/Out Pistons) 2008-Up



B00008

Components



167077A
Seal U760E Transaxle Housing (Left) 2008-Up



277070
Seal U760E Oil Pump 2008-Up



35365106
Screen Filter U760E Valve Body 2008-Up

Release Date 12/19/2013

Sales Policy: All shipments are FCA Pembroke Park. Price and Availability subject to change
© 2013 Seal Aftermarket Products LLC. ALL RIGHTS RESERVED. Possession of price list does not constitute offer to sell
Disclaimer - All information has been checked for accuracy, however no liability can be assumed for errors and omissions

Seal Aftermarket Products LLC · 2315 SW 32nd Avenue · Pembroke Park FL 33023 · [P] (800) 582-2760 · [F] 954-364-2401 · www.sealaftermarketproducts.com

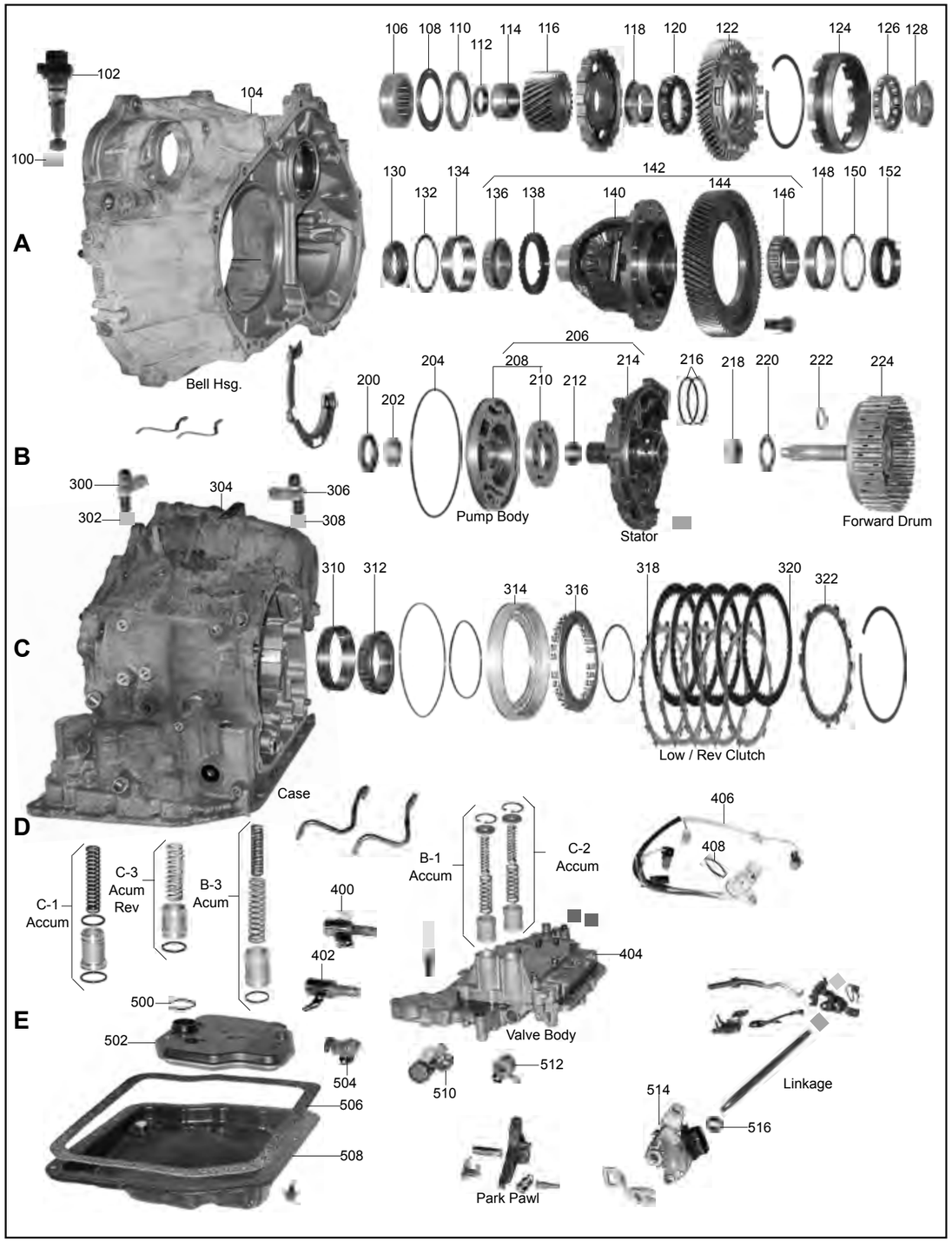
A
B
C
D
E
100
102
104
Bell Hsg.
106
108
110
112
114
116
118
120
122
124
126
128
130
132
134
136
138
140
142
144
146
148
150
152
200
202
204
206
208
210
212
214
216
218
220
222
224
Pump Body
Stator
Forward Drum
300
302
304
306
308
310
312
314
316
318
320
322
Low / Rev Clutch
Case
C-1
Accum
C-3
Acum
Rev
B-3
Acum
B-1
Accum
C-2
Accum
400
402
404
406
408
Valve Body
500
502
504
506
508
510
512
514
516
Linkage
Park Pawl

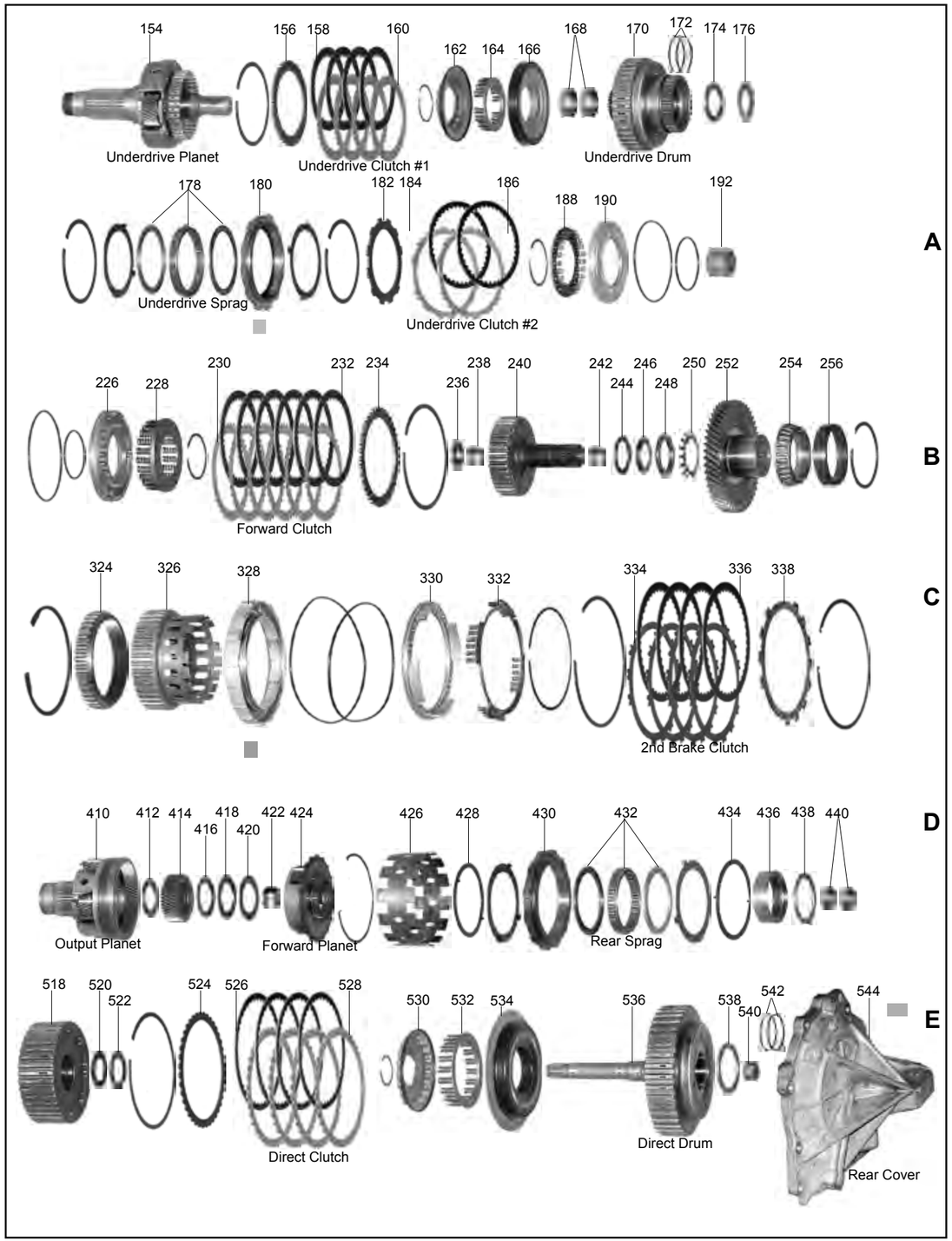
A
B
C
D
E
154
156
158
160
162
164
166
168
170
172
174
176
Underdrive Planet
Underdrive Clutch #1
Underdrive Drum
178
180
182
184
186
188
190
192
Underdrive Sprag
Underdrive Clutch #2
226
228
230
232
234
236
238
240
242
244
246
248
250
252
254
256
Forward Clutch
324
326
328
330
332
334
336
338
2nd Brake Clutch
410
412
414
416
418
420
422
424
426
428
430
432
434
436
438
440
Output Planet
Forward Planet
Rear Sprag
518
520
522
524
526
528
530
532
534
536
538
540
542
544
Direct Clutch
Direct Drum
Rear Cover

ILL.		Qty.	Year	Part #	Ref. #
MASTER OVERHAUL KITS (WITH STEELS)					
N.I.	U140E, U140F (w/ Pistons)	1	98-Up	167006	N.L.
N.I.	U240E, U241E (w/ Pistons)	1	00-Up	167006A	N.L.
MASTER OVERHAUL KITS (LESS STEELS)					
N.I.	U140E, U140F (w/ Pistons)	1	98-Up	167004	N.L.
N.I.	U240E, U241E (w/ Pistons)	1	00-Up	167004A	N.L.
OVERHAUL KITS (WITH RINGS AND SEALS)					
N.I.	U140E, U140F	1	98-Up	167002	N.L.
N.I.	U240E, U241E	1	00-Up	167002A	N.L.
SUB KITS					
N.I.	U140F Transfer Case	1	98-Up	167001	N.L.
BONDED PISTONS					
166A	Underdrive Piston & Retainer Kit (Bonded) (U140E, U140F)	1	98-Up	167961	34205-21010
166A	Underdrive Piston & Retainer Kit (Bonded) (U240E, U241E)	1	98-Up	167961A	34205-32010
226B	Forward Piston & Retainer Kit (Bonded) (U240E, U241E)	1	98-Up	167964	35063-20010
534E	Direct Piston & Retainer Kit (Bonded) (All)	1	98-Up	167965	35606-21010
GASKETS & O-RINGS					
500E	O-Ring, Filter	1	98-Up	167379	90301-31010
506E	Gasket, Pan	1	98-Up	167300	N.L.
METAL CLAD SEALS					
130A	Axle (Right side) (U140E) (2wd)	1	98-Up	87076A	90311-40010
130A	Axle (Right side) (U140F) (4wd)	1	98-Up	167076	90311-62004
130A	Axle (Right Side) (U240E) Celica GTS	1	98-Up	67076BA	90311-35019
130A	Axle (Right Side) (U241E) Camry, RAV4	1	98-Up	167076A	N.L.
152A	Axle (Left Side) (U140E, U140F)	1	98-Up	87077A	90311-50011
152A	Axle (Left Side) (U240E) Celica GTS	1	98-Up	67076BA	90311-35019
152A	Axle (Left Side) (U241E) Camry, RAV4	1	98-Up	167077A	N.L.
200B	Front Pump	1	98-Up	57070A	90311-38029
SEALING RINGS & KITS					
N.I.	Sealing Ring Kit	1	98-Up	167175K	N.L.
FRICTION PLATES					
158A	Underdrive Brake (# 1) (40T) (U140E, U140F)	3-4	98-Up	167102	34261-21010
158A	Underdrive Brake (# 1) (40T) (U240E, U241E)	3-4	00-Up	167102B	34261-32010
184A	Underdrive Brake (# 2) (28T) (U140E, U140F)	3-4	98-Up	167102A	34262-21010
184A	Underdrive Brake (# 2) (28T) (U240E, U241E)	3-4	00-Up	167102C	34262-32010
232B	Forward	5-6	98-Up	167108	35633-06010
320C	Low/ Reverse	5-7	98-Up	167114	35682-21010
336C	2nd Brake	3-4	98-Up	167104	35681-21010
526E	Direct	3-4	98-Up	167106	35667-21010
STEEL PLATES					
160A	Underdrive Brake (# 1) (40T, 3.900" ID) (U140E, U140F)	4	98-Up	167122	34263-21010
160A	Underdrive Brake (# 1) (40T, 3.550" ID) (U240E, U241E)	3	00-Up	16722B	34263-32010
186A	Underdrive Brake (# 2) (11T, 3.660" ID) (U140E, U140F)	4	98-Up	167122A	34264-21010
186A	Underdrive Brake (# 2) (11T, 3.510" ID) (U240E, U241E)	3	00-Up	167122C	34264-32010
230B	Forward	5-6	98-Up	167128	35634-06010
318C	Low/ Reverse	5-7	98-Up	167134	35692-21010
334C	2nd Brake	4	98-Up	167124	35691-21010
528E	Direct	3-4	98-Up	167126	35647-21010
FILTERS					
502E	All Metal (Lexus RX300 1/98 to 4/98)	1	98-98	167010	35330-21011
502E	Metal & Plastic (Replaces All 99-Up)	1	99-Up	167010A	35330-06010
FILTER KITS					
N.I.	Metal & Plastic (Replaces All Metal)	1	98-Up	167011A	N.L.

ILL.		Qty.	Year	Part #	Ref. #
BUSHINGS					
N.I.	Bushing Kit	1	99-Up	167030	N.L.
202B	Pump	1	99-Up	57034A	N.L.
THRUST WASHERS/BEARINGS					
WASHERS					
434D	Washer, Rear Planet to Sprag/Sprag to Direct Hub	2	98-Up	167241	N.L.
BEARINGS					
N.I.	Bearing Kit	1	98-Up	167201	N.L.
ELECTRICAL COMPONENTS					
406D	Wire Harness (Exc. U240E)	1	98-Up	167446	N.L.
406D	Wire Harness (U240E)	1	98-Up	167446A	N.L.
514E	Neutral Safety Switch (Exc. U240E)	1	98-Up	167410	N.L.
514E	Neutral Safety Switch (U240E)	1	98-Up	167410A	N.L.
N.I.	Solenoid, Shift # 1 Control (White Connector)	1	98-Up	167421	35210-21010
N.I.	Solenoid, Shift # 2 Control (Neutral Connector)	1	98-Up	167422	35220-21010
N.I.	Solenoid, Shift # 3 Control (Black Connector)	1	98-Up	167423	35230-21010
N.I.	Solenoid, Lock-Up (Brown Connector)	1	98-Up	167425	35240-21010
N.I.	Solenoid, EPC (White Connector)	1	98-Up	167431	35290-21010
PUMPS					
206B	Pump, U140 (Vented)	1	98-Up	167500	N.L.
206B	Pump, U241 (Non Vented)	1	98-Up	167500B	N.L.
DRUMS & COMPONENTS					
166A	Underdrive Piston & Retainer Kit (Bonded) (U140E, U140F)	1	98-Up	167961	34205-21010
166A	Underdrive Piston & Retainer Kit (Bonded) (U240E, U241E)	1	98-Up	167961A	34205-32010
170A	Drum, Underdrive (2wd)	1	98-Up	167550	34204-28020
170A	Drum, Underdrive (4wd)	1	98-Up	167550A	34204-28030
224B	Drum, Forward (4 Clutch) (U240)	1	99-Up	167554	N.L.
224B	Drum, Forward (6 Clutch) (U140)	1	99-Up	167554A	N.L.
226B	Forward Piston & Retainer Kit (Bonded) (U240E, U241E)	1	98-Up	167964	35063-20010
228B	Return Spring, Forward Piston (Bonded) (U140E, U140F)	1	98-Up	167974	35603-20010
240B	Hub, Forward	1	98-Up	167574	N.L.
326C	Hub, Reverse Brake	1	98-Up	167576	35662-28010
534E	Direct Piston & Retainer Kit (Bonded) (All)	1	98-Up	167965	35606-21010
536E	Drum, Direct (3 Clutch) (U240)	1	99-Up	167555A	N.L.
536E	Drum, Direct (4 Clutch) (U140)	1	99-Up	167555	N.L.
PLANETS AND COMPONENTS					
154A	Planet, Underdrive (2wd) (U140F, U241E)	1	98-Up	167580	34330-28020
154A	Planet, Underdrive (4wd) (U140F, U241E)	1	98-Up	167580A	34330-28010
324C	Ring Gear, Rear Planet	1	98-Up	167592	35743-28010
410D	Planet, Rear (3 Gear) (U140F, U241E)	1	98-Up	167584	35760-28010
410D	Planet, Rear (4 Gear) (U140F, U241E)	1	98-Up	167584A	N.L.
424D	Planet, Front (3 Gear) (U240)	1	98-Up	167582	35720-28080
424D	Planet, Front (4 Gear) (U140)	1	98-Up	167582A	N.L.
SUN GEARS					
414D	Sun Gear, Rear Planet	1	98-Up	167614A	35730-28020
518E	Sun Gear w/ Hub, Front Planet	1	98-Up	167612	35714-28010
ONE WAY CLUTCHES					
178A	Sprag, Underdrive (U140E, U140F)	1	98-Up	167650	N.L.
178A	Sprag, Underdrive (U240)	1	00-Up	167650A	N.L.
432D	Sprag, Rear (28 Elements)	1	98-Up	167652	N.L.
432D	Sprag, Rear (22 Elements)	1	98-Up	167652A	N.L.
VALVE BODIES & GOVERNORS					
404D	Valve Body (2wd)	1	98-05	167740-1	N.L.
404D	Valve Body (2wd)	1	06-07	167740-4	N.L.
404D	Valve Body (Awd)	1	98-05	167740-2	N.L.
404D	Valve Body (Awd)	1	06-07	167740-5	N.L.

ILL.		Qty.	Year	Part #	Ref. #
MISCELLANEOUS COMPONENTS					
SERVOS AND ACCUMULATORS					
N.I.	Accumulator Piston	1	98-Up	167932	N.L.
TECHNICAL MANUALS					
N.I.	(ATSG)	1	98-Up	167400T	N.L.
N.I.	Tech Manual (U140, U240) (OE)	1	98-Up	167400C	N.L.
TOOLS					
N.I.	Socket, Underdrive Planet & Counter Gear Nut	1	98-Up	T-16700	N.L.

Notes

Notes

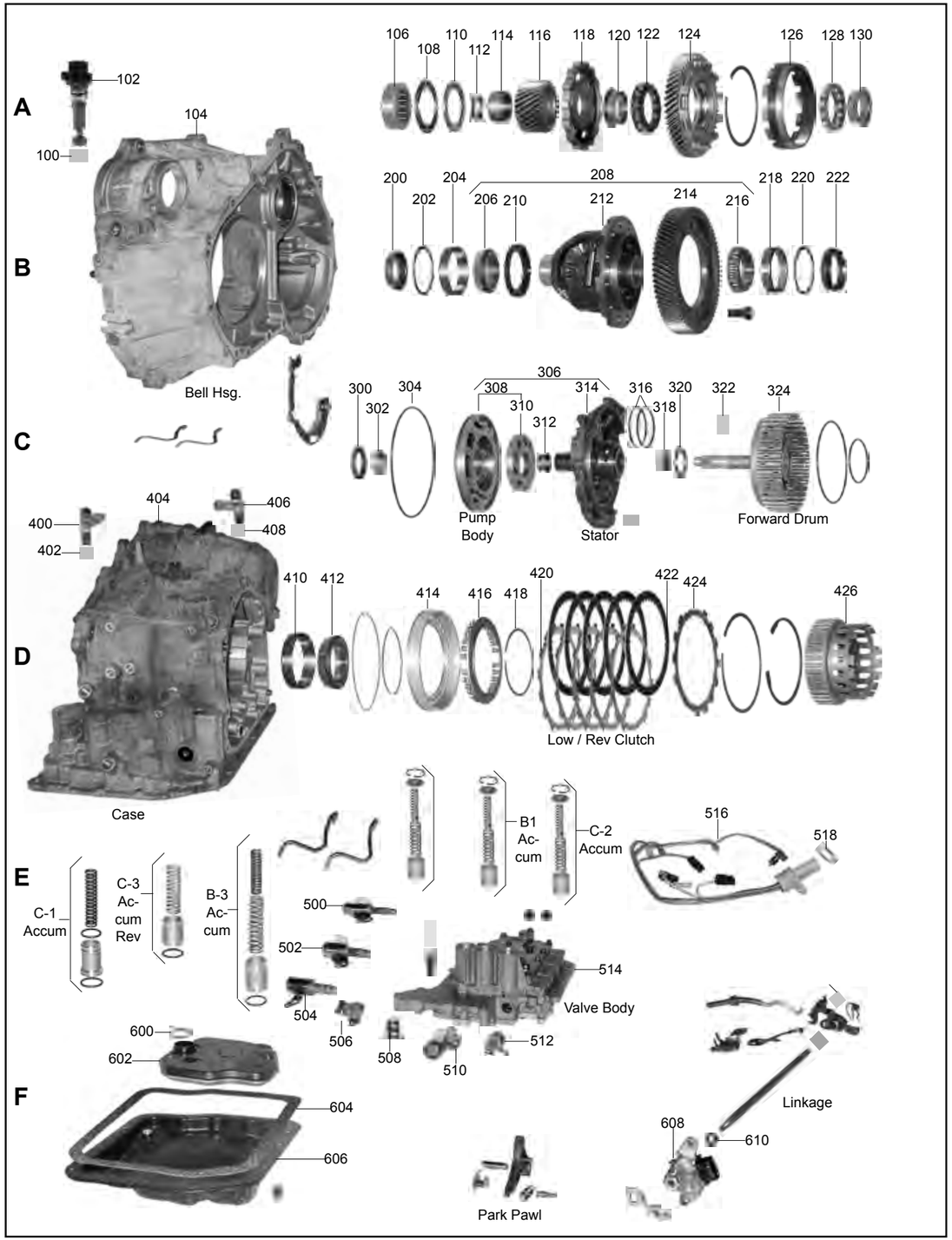
A
B
C
D
E
F
102
104
100
Bell Hsg.
106
108
110
112
114
116
118
120
122
124
126
128
130
200
202
204
206
208
210
212
214
216
218
220
222
300
302
304
306
308
310
312
314
316
318
320
322
324
Pump Body
Stator
Forward Drum
400
402
404
406
408
410
412
414
416
418
420
422
424
426
Low / Rev Clutch
Case
C-1 Accum
C-3 Ac-cum Rev
B-3 Ac-cum
B1 Ac-cum
C-2 Accum
500
502
504
506
508
510
512
514
516
518
Valve Body
600
602
604
606
Linkage
608
610
Park Pawl

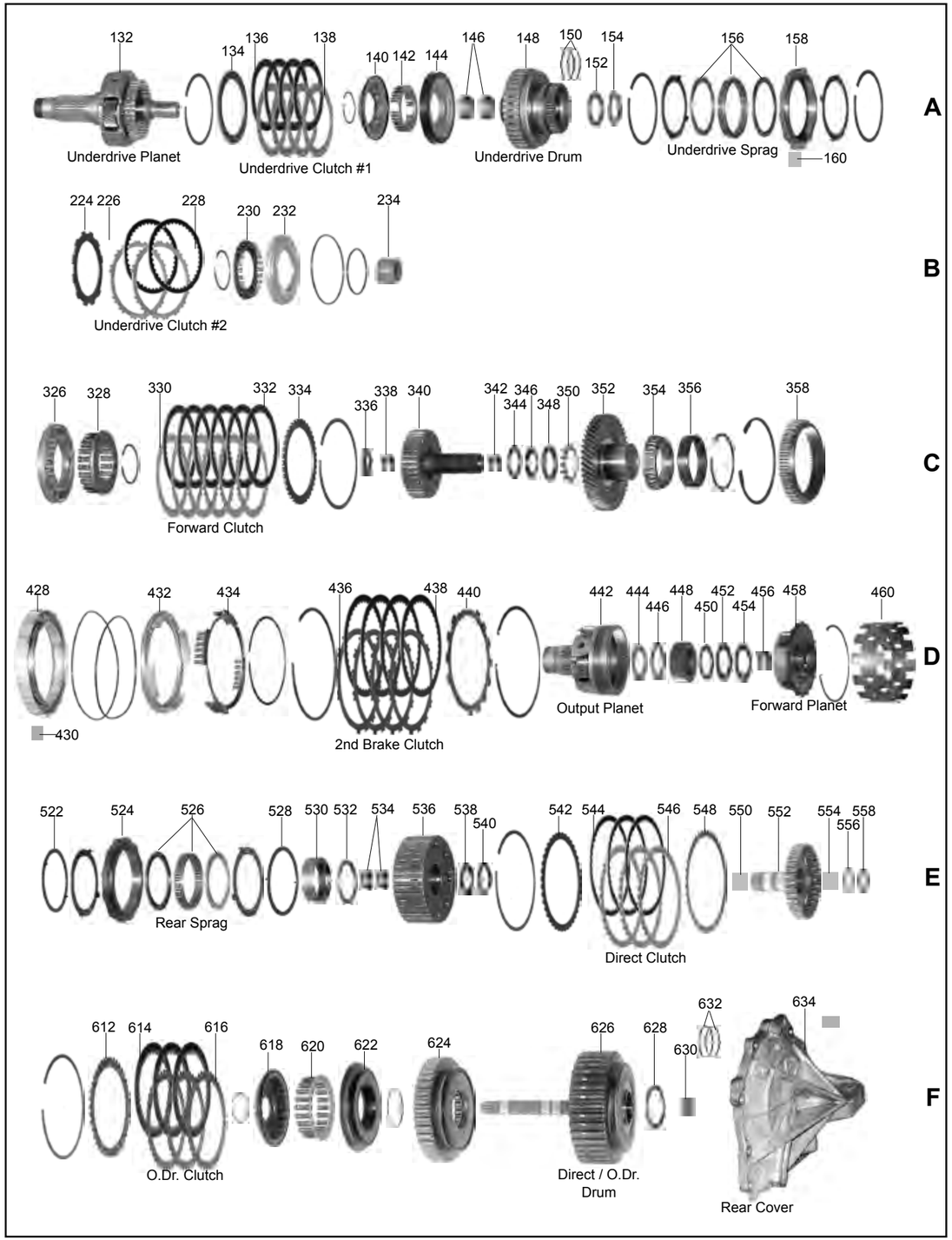
A
B
C
D
E
F
132
134
136
138
140
142
144
146
148
150
152
154
156
158
160
Underdrive Planet
Underdrive Clutch #1
Underdrive Drum
Underdrive Sprag
224
226
228
230
232
234
Underdrive Clutch #2
326
328
330
332
334
336
338
340
342
344
346
348
350
352
354
356
358
Forward Clutch
428
430
432
434
436
438
440
442
444
446
448
450
452
454
456
458
460
2nd Brake Clutch
Output Planet
Forward Planet
522
524
526
528
530
532
534
536
538
540
542
544
546
548
550
552
554
556
558
Rear Sprag
Direct Clutch
612
614
616
618
620
622
624
626
628
630
632
634
O.Dr. Clutch
Direct / O.Dr. Drum
Rear Cover

ILL.		Qty.	Year	Part #	Ref. #
MASTER OVERHAUL KITS (WITH STEELS)					
N.I.	U150, U151 (w/ Pistons)	1	02-Up	167006B	N.L.
N.I.	U250 (w/ Pistons)	1	02-Up	167006G	N.L.
MASTER OVERHAUL KITS (LESS STEELS)					
N.I.	U150, U151 (w/ Pistons)	1	02-Up	167004B	N.L.
N.I.	U250 (w/ Pistons)	1	02-Up	167004G	N.L.
OVERHAUL KITS (WITH RINGS AND SEALS)					
N.I.	U150, U151	1	02-Up	167002B	N.L.
N.I.	U250	1	05-Up	167002G	N.L.
SUB KITS					
N.I.	Sub Kit, Transfer Case (U151F)	1	02-Up	167001	N.L.
BONDED PISTONS					
144A	Underdrive Piston & Retainer Kit (Bonded) (U150)	1	02-Up	167961	34205-21010
144A	Underdrive Piston & Retainer Kit (Bonded) (U250)	1	02-Up	167961A	34205-32010
326C	Forward Piston (Bonded)	1	02-Up	167964A	N.L.
618F	Overdrive Direct Retainer (Balance) (Bonded)	1	02-Up	167980	N.L.
622F	Overdrive Direct Piston (Bonded)	1	02-Up	167960	N.L.
624F	Direct Piston (Bonded) (Overdrive Direct Drum)	1	02-Up	167965A	N.L.
N.I.	Forward Piston Retainer (Balance) (Bonded)	1	02-Up	167964B	N.L.
GASKETS & O-RINGS					
600F	O-Ring, Filter	1	02-Up	167379	90301-31010
604F	Gasket, Pan	1	02-Up	167300	N.L.
METAL CLAD SEALS					
200B	Axle (Right side) (U150) (2wd)	1	02-Up	87076A	90311-40010
200B	Axle (Right side) (U150) (4wd)	1	02-Up	167076	90311-62004
200B	Axle (Right Side) (U250)	1	02-Up	167076A	N.L.
222B	Axle (Left Side) (U150)	1	02-Up	87077A	90311-50011
222B	Axle (Left Side) (U250)	1	02-Up	167077A	N.L.
300C	Front Pump	1	02-Up	57070A	90311-38029
FRICTION PLATES					
136A	Underdrive # 1 (U150) (40T)	4	02-Up	167102	34261-21010
136A	Underdrive # 1 (U250)	4	05-Up	167102B	34261-32010
226B	Underdrive # 2 (U150) (28T)	4	02-Up	167102A	34262-21010
226B	Underdrive # 2 (U250)	4	05-Up	167102C	34262-32010
332C	Forward	5	02-Up	167108	35633-06010
422D	Low/ Reverse	5-6	02-Up	167114	35682-21010
438D	2nd Brake	3-4	02-Up	167104	35681-21010
544E	Direct	3	02-Up	167106A	35667-33010
614F	Overdrive Direct	3-4	02-Up	167100	34627-08010
STEEL PLATES					
138A	Underdrive # 1 (U150) (40T)	4	02-Up	167122	34263-21010
138A	Underdrive # 1 (U250)	4	02-Up	167122B	34263-32010
228B	Underdrive # 2 (U150) (11T)	4	02-Up	167122A	34264-21010
228B	Underdrive # 2 (U250)	4	02-Up	167122C	34264-32010
330C	Forward	5	02-Up	167128	35634-06010
420D	Low/ Reverse	5-6	02-Up	167134	35692-21010
436D	2nd Brake	3-4	02-Up	167124	35691-21010
546E	Direct	3	02-Up	167126A	35647-33030
616F	Overdrive Direct	3-4	02-Up	167120	34616-33010
FILTERS					
602F	U150, U151, U250	1	02-Up	167010B	35330-08010
FILTER KITS					
N.I.	U150, U151, U250	1	02-Up	167011B	N.L.
BUSHINGS					
N.I.	Bushing Kit	1	02-Up	167030B	N.L.
302C	Pump	1	02-Up	57034A	N.L.

ILL.		Qty.	Year	Part #	Ref. #
ELECTRICAL COMPONENTS					
N.I.	Shift # 1 Linear (White Connector, Large Body)	1	02-Up	167421A	35210-33010
N.I.	Shift # 1 Linear (Black Connector, Small Body)	1	03-Up	167421B	35210-45010
N.I.	Shift # 2 Linear, Position # 1 (White Connector, Large Body)	1	02-Up	167422A	35220-33010
N.I.	Shift # 2 Linear, Position # 2 (White Connector, Large Body)	1	02-Up	167422C	35270-33020
N.I.	Shift # 2 Linear (Black Connector, Small Body)	2	03-Up	167422B	35270-33020
N.I.	Shift # 3, Position # 1 (Black Connector, Long Bracket)	1	02-Up	167423B	35230-33010
N.I.	Shift # 3, Position # 2 (Black Connector, Short Bracket)	1	02-Up	167423A	35230-33020
N.I.	Lock-Up (Brown Connector)	1	02-Up	167425A	35240-33030
N.I.	EPC (White Connector, Large Body)	1	02-Up	167431B	N.L.
N.I.	EPC (Black Connector, Small Body)	1	03-Up	167431A	35290-45010
PUMPS					
306C	Pump, (Non Vented)	1	02-Up	167500B	N.L.
DRUMS & COMPONENTS					
144A	Underdrive Piston & Retainer Kit (Bonded) (U150)	1	02-Up	167961	34205-21010
144A	Underdrive Piston & Retainer Kit (Bonded) (U250)	1	02-Up	167961A	34205-32010
148A	Drum, Underdrive Sun Gear	1	02-Up	167550A	N.L.
324C	Drum, Forward (6 Clutch)	1	02-Up	167554B	N.L.
326C	Forward Piston (Bonded)	1	02-Up	167964A	N.L.
340C	Hub, Forward	1	02-Up	167574	N.L.
426D	Hub, Reverse Brake	1	02-Up	167576B	N.L.
618F	Overdrive Direct Retainer (Balance) (Bonded)	1	02-Up	167980	N.L.
622F	Overdrive Direct Piston (Bonded)	1	02-Up	167960	N.L.
624F	Direct Piston (Bonded) (Overdrive Direct Drum)	1	02-Up	167965A	N.L.
626F	Drum, Direct	1	02-Up	167555B	N.L.
N.I.	Forward Piston Retainer (Balance) (Bonded)	1	02-Up	167964B	N.L.
PLANETS AND COMPONENTS					
126A	Ring Gear, Underdrive	1	02-Up	167590D	N.L.
132A	Planet , Underdrive	1	02-Up	167580D	N.L.
358C	Ring Gear, Output Planet	1	02-Up	167592	35743-28010
442D	Planet, Rear	1	02-Up	167584B	N.L.
458D	Planet, Front (4 Gear)	1	02-Up	167582B	N.L.
SUN GEARS					
448D	Sun Gear, Output	1	02-Up	167614B	N.L.
536E	Sun Gear w/ Shell	1	02-Up	167612B	N.L.
ONE WAY CLUTCHES					
156A	Sprag, Underdrive	1	02-Up	167650	N.L.
526E	Sprag, Rear (28 Elements)	1	02-Up	167652	N.L.
526E	Sprag, Rear (22 Elements)	1	02-Up	167652A	N.L.
VALVE BODIES & GOVERNORS					
514E	Valve Body	1	04-Up	167740-3	N.L.
MISCELLANEOUS COMPONENTS					
N.I.	Shift Valve, 2-3	1	98-Up	167741F	N.L.
N.I.	End Plug Kit	1	98-Up	167741G	N.L.
SERVOS AND ACCUMULATORS					
N.I.	Accumulator Piston	1	98-Up	167932	N.L.
TECHNICAL MANUALS					
N.I.	Diagnostic Guide (U150, U250)	1	98-Up	167400BT	N.L.

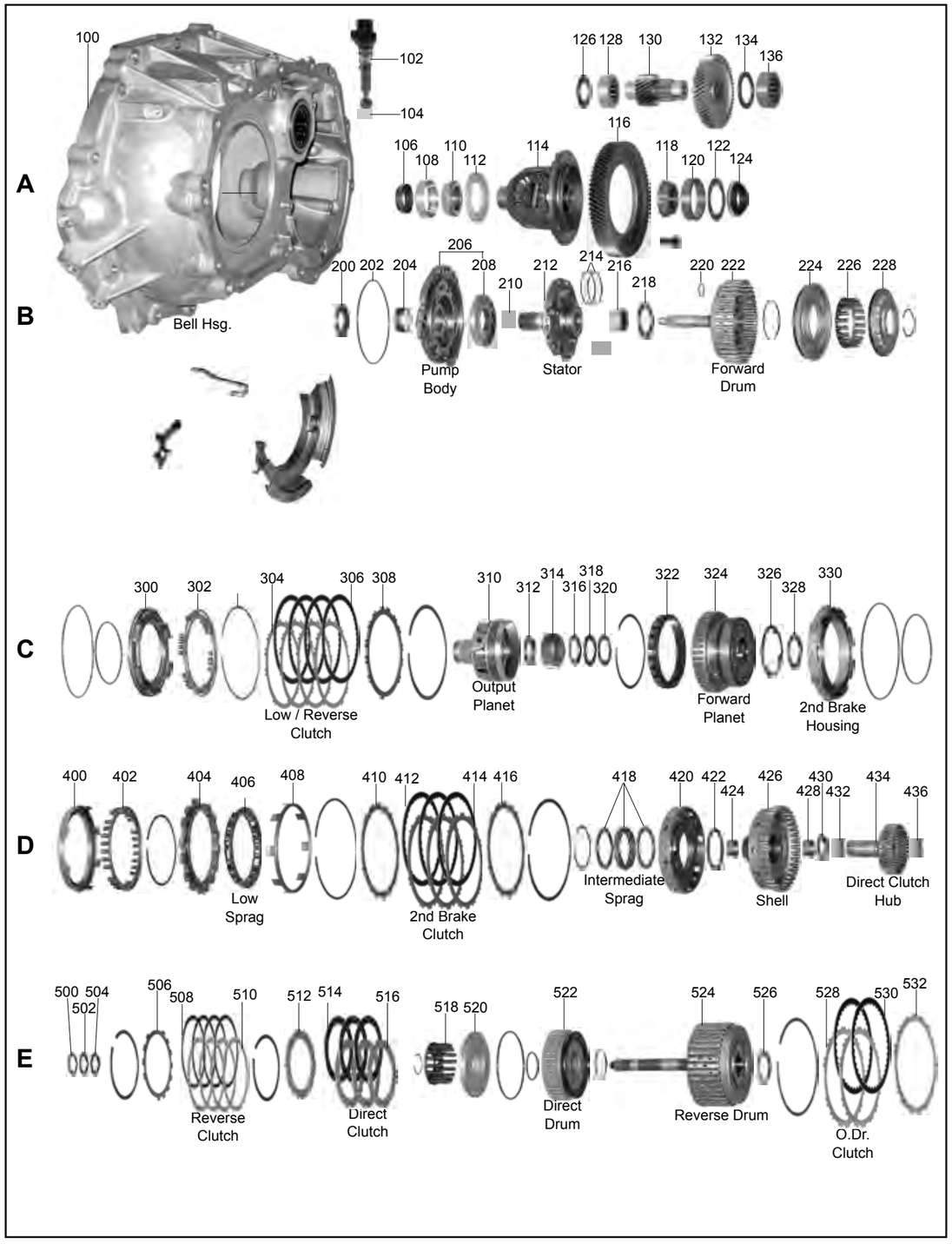
A
B
C
D
E
100
102
104
106
108
110
112
114
116
118
120
122
124
126
128
130
132
134
136
200
202
204
206
208
210
212
214
216
218
220
222
224
226
228
Bell Hsg.
Pump Body
Stator
Forward Drum
300
302
304
306
308
310
312
314
316
318
320
322
324
326
328
330
Low / Reverse Clutch
Output Planet
Forward Planet
2nd Brake Housing
400
402
404
406
408
410
412
414
416
418
420
422
424
426
428
430
432
434
436
Low Sprag
2nd Brake Clutch
Intermediate Sprag
Shell
Direct Clutch Hub
500
502
504
506
508
510
512
514
516
518
520
522
524
526
528
530
532
Reverse Clutch
Direct Clutch
Direct Drum
Reverse Drum
O.Dr. Clutch

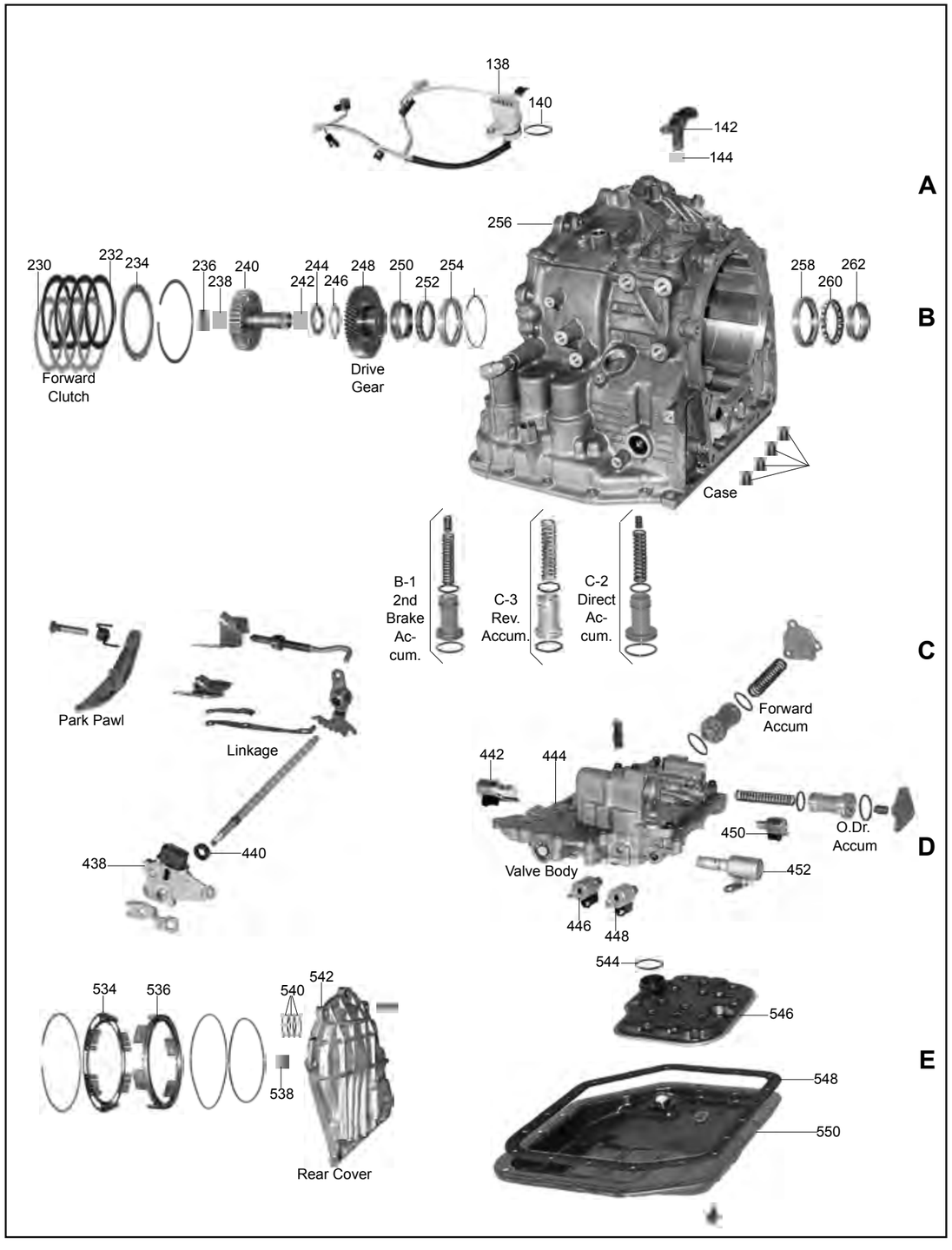
A
B
C
D
E
138
140
142
144
256
230
232
234
236
238
240
242
244
246
248
250
252
254
258
260
262
Forward Clutch
Drive Gear
Case
B-1 2nd Brake Ac-cum.
C-3 Rev. Accum.
C-2 Direct Ac-cum.
Park Pawl
Linkage
438
440
Forward Accum
442
444
450
O.Dr. Accum
Valve Body
452
446
448
534
536
538
540
542
Rear Cover
544
546
548
550

ILL.		Qty.	Year	Part #	Ref. #
MASTER OVERHAUL KITS (WITH STEELS)					
N.I.	U340E, U341E	1	00-Up	127006	N.L.
MASTER OVERHAUL KITS (LESS STEELS)					
N.I.	U340E, U341E	1	00-Up	127004	N.L.
OVERHAUL KITS (WITH RINGS AND SEALS)					
N.I.	U340E, U341E	1	00-Up	127002	N.L.
BONDED PISTONS					
224B	Forward Piston & Retainer Kit (Bonded)	1	00-Up	127964	35063-52010
522E	Direct (Reverse) Piston (Bonded)	1	00-Up	127966	35605-52010
GASKETS & O-RINGS					
548E	Gasket, Pan	1	00-Up	127300	35168-52020
METAL CLAD SEALS					
106A	Axle (Right Side / Bell) (U340E)	1	00-Up	67076B	90311-34012
106A	Axle (Right Side / Bell) (U341E) (Exc. Awd)	1	00-Up	67076BA	90311-35019
106A	Axle (Right Side / Bell) (U341E) (Awd)	1	00-Up	127076	N.L.
124A	Axle (Left Side / Case) (U340E)	1	00-Up	67077	90311-34023
124A	Axle (Left Side / Case) (U341E)	1	00-Up	127077	90311-34022
200B	Front Pump	1	00-Up	57070A	90311-38029
SEALING RINGS & KITS					
N.I.	Sealing Ring Kit	1	00-Up	127175K	N.L.
FRICTION PLATES					
232B	Forward	4	00-Up	127108	35633-52020
306C	Low/ Reverse	4	00-Up	127114	35683-52020
412D	2nd Brake	3-4	00-Up	127104	35682-52020
508E	Reverse	2-3	00-Up	127110	35677-52020
514E	Direct	3	00-Up	127106	35667-52020
530E	Overdrive Brake	2	00-Up	127100	34633-52020
STEEL PLATES					
230B	Forward	4	00-Up	127128	35634-52020
304C	Low/ Reverse	4	00-Up	127134	35693-52040
414D	2nd Brake (.079") (U341E)	3	00-Up	127124A	35692-52020
414D	2nd Brake (.118") (U340E)	3	00-Up	127124	35678-52020
510E	Reverse	2-3	00-Up	127130	35648-52020
516E	Direct	3	00-Up	127126	35675-52040
528E	Overdrive Brake	2	00-Up	127120	34625-52060
FILTERS					
546E	U340E, U341E	1	00-Up	127010	35330-0W020
FILTER KITS					
N.I.	U340E, U341E	1	00-Up	127011	N.L.
ELECTRICAL COMPONENTS					
138A	Harness w/ Connector	1	00-Up	127446	N.L.
438D	Neutral Safety Switch	1	00-Up	127410	N.L.
N.I.	Solenoid, Shift # 1	1	00-Up	127421	35240-52010
N.I.	Solenoid, Shift # 2	1	00-Up	127422A	35230-52010
N.I.	Solenoid, Shift # 3	1	00-Up	127422	35250-52010
N.I.	Solenoid, Lock-Up (TCC)	1	00-Up	127425	35270-52010
N.I.	Solenoid, EPC (U340E)	1	00-Up	127431A	35290-52030
N.I.	Solenoid, EPC (U341E)	1	00-Up	127431	35290-52020
DRUMS & COMPONENTS					
224B	Forward Piston & Retainer Kit (Bonded)	1	00-Up	127964	35063-52010
522E	Direct (Reverse) Piston (Bonded)	1	00-Up	127966	35605-52010
ONE WAY CLUTCHES					
406D	Number 2	1	00-Up	127654	N.L.
418D	Number 1	1	00-Up	127652	N.L.

Notes

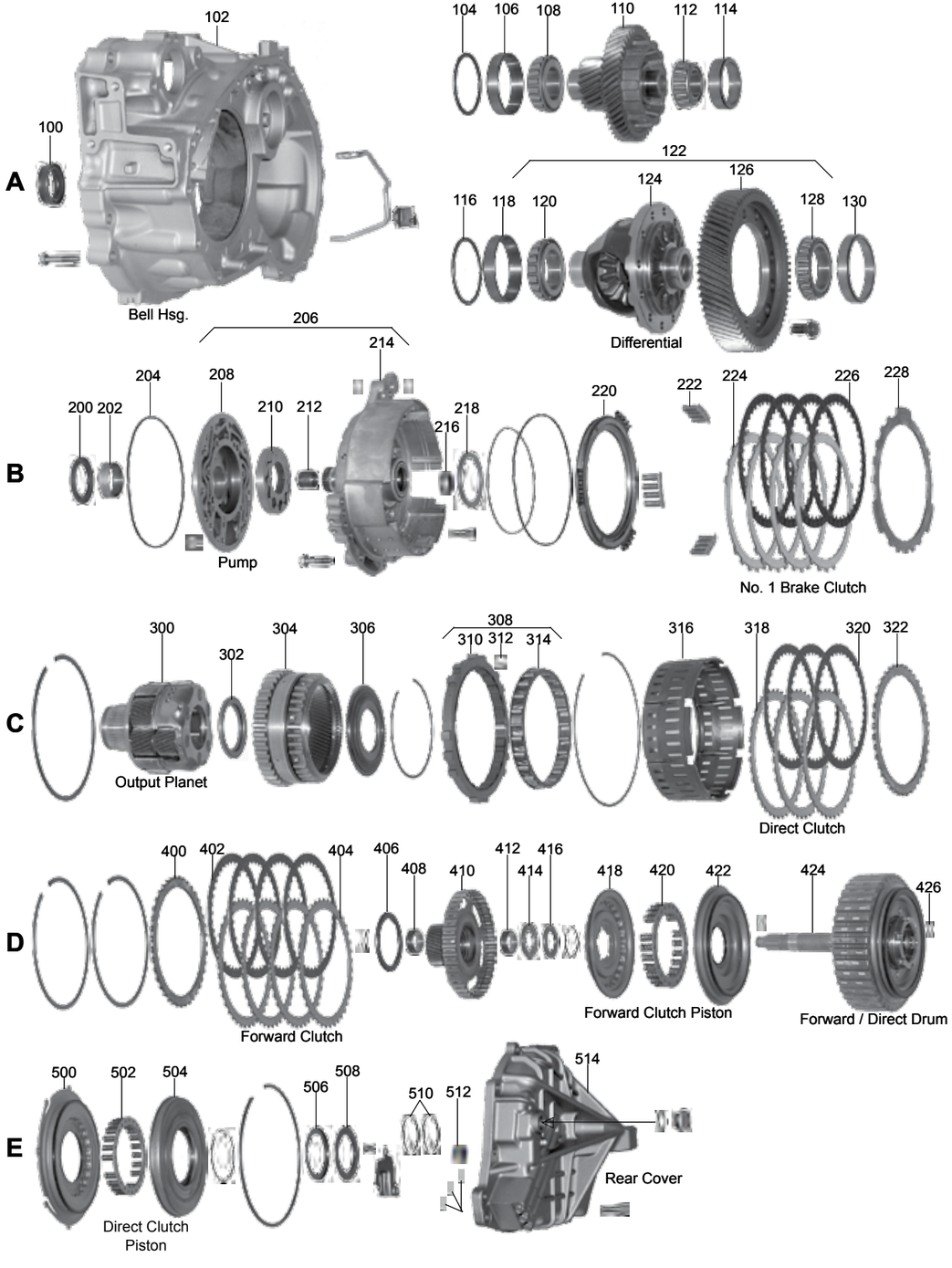
A
B
C
D
E
100
102
104
106
108
110
112
114
116
118
120
122
124
126
128
130
Bell Hsg.
Differential
200
202
204
206
208
210
212
214
216
218
220
222
224
226
228
Pump
No. 1 Brake Clutch
300
302
304
306
308
310
312
314
316
318
320
322
Output Planet
Direct Clutch
400
402
404
406
408
410
412
414
416
418
420
422
424
426
Forward Clutch
Forward Clutch Piston
Forward / Direct Drum
500
502
504
506
508
510
512
514
Direct Clutch Piston
Rear Cover

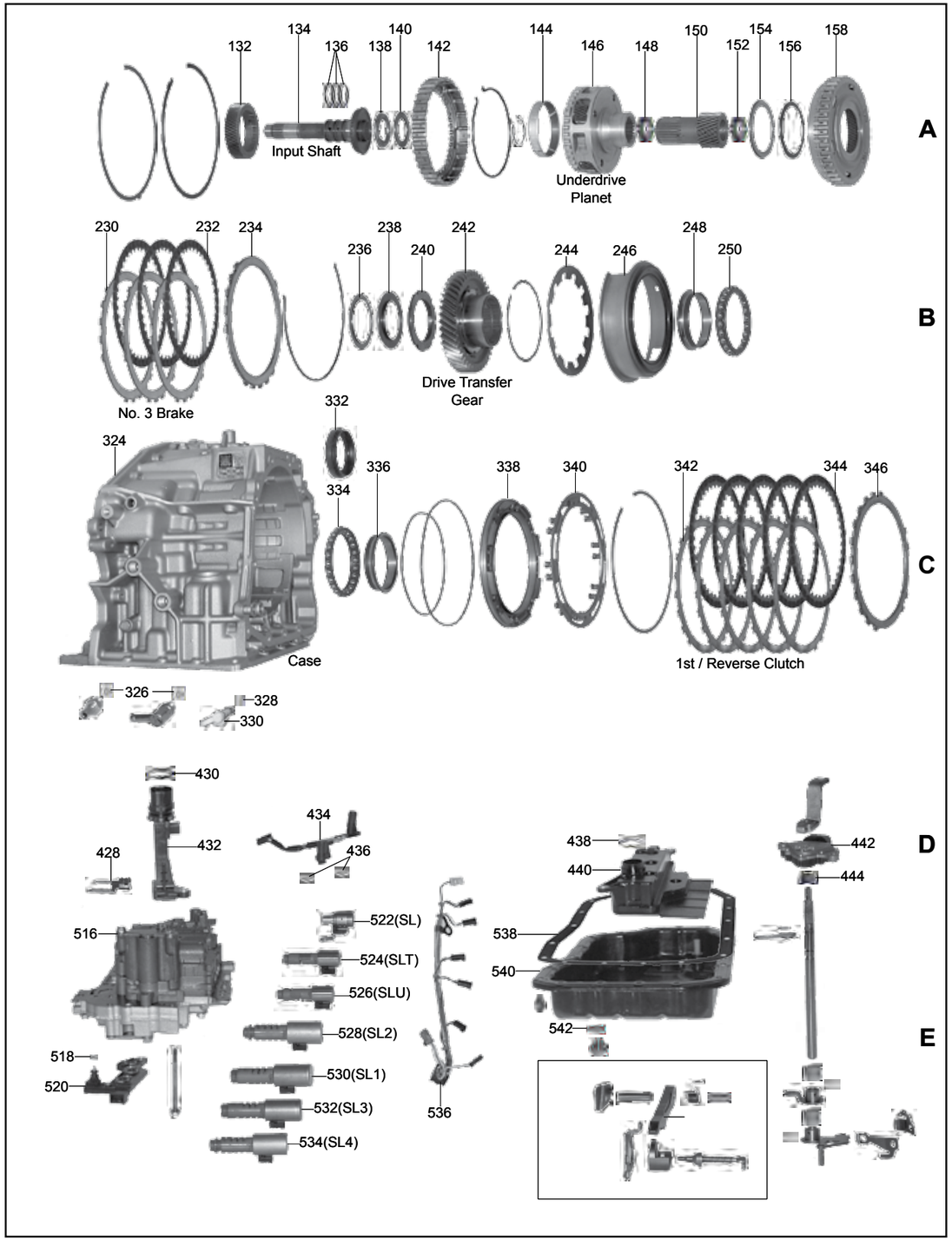
A
B
C
D
E
132
134
136
138
140
142
144
146
148
150
152
154
156
158
Input Shaft
Underdrive Planet
230
232
234
236
238
240
242
244
246
248
250
No. 3 Brake
Drive Transfer Gear
324
326
328
330
332
334
336
338
340
342
344
346
Case
1st / Reverse Clutch
428
430
432
434
436
516
518
520
522(SL)
524(SLT)
526(SLU)
528(SL2)
530(SL1)
532(SL3)
534(SL4)
536
438
440
442
444
538
540
542

ILL.		Qty.	Year	Part #	Ref. #
MASTER OVERHAUL KITS (WITH STEELS)					
N.I.	U660E	1	07-Up	277006	N.L.
N.I.	U760E	1	08-Up	277006A	N.L.
MASTER OVERHAUL KITS (LESS STEELS)					
N.I.	U660E	1	07-Up	277004	N.L.
N.I.	U760E	1	08-Up	277004A	N.L.
OVERHAUL KITS (WITH RINGS AND SEALS)					
N.I.	U660E	1	07-Up	277002	N.L.
N.I.	U760E	1	08-Up	277002A	N.L.
BONDED PISTONS					
246B	Piston, B3 (Bonded)	1	07-Up	277965	N.L.
418D	Retainer, C1 Balance Piston (Bonded)	1	07-Up	277984	N.L.
422D	Piston, C1 (Bonded)	1	07-Up	277964	N.L.
500E	Piston, C2 (Bonded)	1	07-Up	277960	N.L.
504E	Sleeve, C2 Drum (Bonded)	1	07-Up	277330	N.L.
GASKETS & O-RINGS					
204B	O-Ring, Pump	1	07-Up	277311	N.L.
438D	O-Ring, Filter	1	07-Up	277379	N.L.
538E	Gasket, Pan	1	07-Up	277300	N.L.
METAL CLAD SEALS					
100A	Axle (Right side)	1	07-Up	87076A	90311-40010
200B	Front Pump	1	07-Up	277070	N.L.
332C	Axle (Left Side)	1	07-Up	167077A	N.L.
SEALING RINGS & KITS					
N.I.	Sealing Ring Kit	1	07-Up	277175K	N.L.
FRICTION PLATES					
226B	B1	4	07-Up	277104	N.L.
232B	B3	3	07-Up	277104	N.L.
320C	C2	3	07-Up	277108	N.L.
344C	B2	5	07-Up	277114	N.L.
402D	C1	4	07-Up	277108	N.L.
STEEL PLATES					
230B	B3	2	07-Up	277126	N.L.
318C	C2	3	07-Up	277120	N.L.
324C	B1	4	07-Up	277124	N.L.
342C	B2	5	07-Up	277134	N.L.
404D	C1	4	07-Up	277128	N.L.
PRESSURE PLATES					
228B	B1	1	07-Up	277144	N.L.
234B	B3	2	07-Up	277146	N.L.
322C	C2	1	07-Up	277140	N.L.
346C	B2	1	07-Up	277154	N.L.
400D	C1	1	07-Up	277148	N.L.
FILTERS					
440D	U660E	1	07-Up	277010	N.L.
FILTER KITS					
N.I.	U660E	1	07-Up	277011	N.L.
BUSHINGS					
N.I.	Bushing Kit	1	07-Up	277030	N.L.
144A	Underdrive Planet	1	07-Up	277042	N.L.
148A	Front Sun Gear	2	07-Up	277052	N.L.
202B	Pump Body	1	07-Up	277034	N.L.
212B	Stator (Front)	1	07-Up	277036	N.L.
408D	Rear Sun Gear	2	07-Up	277056	N.L.

ILL.		Qty.	Year	Part #	Ref. #
THRUST WASHERS/BEARINGS					
BEARINGS					
108A	Pinion Bearing to Bell Housing	1	07-Up	277274	N.L.
112A	Pinion Bearing to Case	1	07-Up	277281	N.L.
120A	Differential Bearing to Bell Housing	1	07-Up	277292	N.L.
128A	Differential Bearing to Case	1	07-Up	277289	N.L.
138A	Input Shaft to Underdrive Planet	1	07-Up	277214	N.L.
140A	Input Shaft to Underdrive Planet Race	1	07-Up	277215	N.L.
154A	Underdrive Planet to Ring Gear Bearing	1	07-Up	277217	N.L.
156A	Underdrive Planet to Ring Gear Race	1	07-Up	277218	N.L.
216B	Stator (Rear) Caged Bearing	1	07-Up	277209	N.L.
218B	Stator to Sun Gear	1	07-Up	277212	N.L.
238B	Underdrive Planet to Drive Gear Nut	1	07-Up	277223	N.L.
250B	Counter Drive Bearing to Case	1	07-Up	277279	N.L.
302C	Output Planet to Rear Sun Bearing	1	07-Up	277247	N.L.
406D	Output Ring to Rear Sun Bearing	1	07-Up	277253	N.L.
414D	Sun Gear Hub to Drum	1	07-Up	277254	N.L.
508E	Drum to Cover Bearing	1	07-Up	277229	N.L.
512E	Cover Caged Bearing	1	07-Up	277230	N.L.
ELECTRICAL COMPONENTS					
434D	Sensor, Input / Output	1	07-Up	277438	89413-33030
442D	Switch, MLPS	1	07-Up	277410	84540-33010
520E	Switch, PSM w/ TOT	1	07-Up	277442	82125-33090
536E	Harness w/ Connector	1	07-Up	277446	82125-33100
N.I.	Solenoid, Linear (Large) (Black Connector) (SL2, SL4)	2	07-Up	277421	35220-33040
N.I.	Solenoid, Linear (Large) (Brown Connector) (SL1, SL3)	2	07-Up	277422	35210-33030
N.I.	Solenoid, Linear (Small) (Lock-Up Control) (SLU)	1	07-Up	277425	35280-52040
N.I.	Solenoid, Linear (Small) (Line Pressure Control) (SLT)	1	07-Up	277428	35290-33040
N.I.	Solenoid w/ Bracket (SL)	1	07-Up	277430	35240-33040
PUMPS					
206B	Pump Assembly	1	07-Up	277500	N.L.
208B	Pump Body	1	07-Up	277510	35035-07010
PUMP COMPONENTS					
210B	Pump Gears	1	07-Up	277530	N.L.
214B	Stator	1	07-Up	277520	35370-07010
DRUMS & COMPONENTS					
142A	B1 Hub	1	07-Up	277576	N.L.
220B	Piston, B1	1	07-Up	277962	N.L.
222B	Return Spring, B1	3	07-Up	277972	N.L.
244B	Return Spring, B3	1	07-Up	277975	N.L.
246B	Piston, B3 (Bonded)	1	07-Up	277965	N.L.
316C	Apply Ring, Direct	1	07-Up	277548	N.L.
316C	Retainer, C2 Balance (Steel)	1	07-Up	277980	N.L.
338C	Piston, B2	1	07-Up	277967	N.L.
340C	Return Spring, B2	1	07-Up	277977	N.L.
418D	Retainer, C1 Balance Piston (Bonded)	1	07-Up	277984	N.L.
420D	Return Spring, C1	1	07-Up	277974	N.L.
422D	Piston, C1 (Bonded)	1	07-Up	277964	N.L.
424D	Drum, Forward & Direct	1	07-Up	277554	N.L.
500E	Piston, C2 (Bonded)	1	07-Up	277960	N.L.
502E	Return Spring, C2	1	07-Up	277970	N.L.
504E	Sleeve, C2 Drum (Bonded)	1	07-Up	277330	N.L.
PLANETS AND COMPONENTS					
146A	Planet, Underdrive	1	07-Up	277586	34330-07020
158A	Ring Gear, Underdrive Planet (110T)	1	07-Up	277596	N.L.
300C	Planet, Rear	1	07-Up	277584	35720-33060
304C	Ring Gear, Rear Planet (69T)	1	07-Up	277594	35743-33030
306C	Hub, Rear Ring Gear	1	07-Up	277604	35762-33020

ILL.		Qty.	Year	Part #	Ref. #
SUN GEARS					
132A	Sun Gear, Underdrive (66T)	1	07-Up	277616	N.L.
150A	Sun Gear, Front (66T)	1	07-Up	277612	34321-33010
410D	Sun Gear, Rear (27T)	1	07-Up	277614	35706-33020
ONE WAY CLUTCHES					
314C	Roller Clutch, Low	1	07-Up	277642	35790-33020
SHAFTS					
134A	Turbine Shaft	1	07-Up	277673	35711-33060
VALVE BODIES & GOVERNORS					
516E	Valve Body (7 Solenoids)	1	07-Up	277740-1	35410-33171
DIFFERENTIALS					
122A	Differential Assembly	1	07-Up	277715	N.L.
124A	Differential Carrier (12 Bolt, 8.5" OD)	1	07-Up	277716	41039-28020
126A	Ring Gear (69T, 1 Groove)	1	07-Up	277720	41221-33160
CASES/HOUSINGS & COMPONENTS					
102A	Bell Housing	1	2007	277750	35105-33010
102A	Bell Housing	1	07-08	277750A	35105-33011
102A	Bell Housing	1	09-Up	277750B	35105-07022
324C	Case	1	07-Up	277760	35104-33070
514E	Cover, Rear	1	07-Up	277759	35102-07010
540E	Pan (Bottom)	1	07-Up	277765	35106-33061
MISCELLANEOUS COMPONENTS					
110A	Transfer Gear, Driven (47T)	1	07-Up	277712	35705-33020
240B	Counter Drive Nut	1	07-Up	277796	N.L.
242B	Output Gear, Drive (44T)	1	07-Up	277710	N.L.
N.I.	Transfer Gear Kit (44T / 47T)	1	07-Up	277710K	N.L.

Notes

Notes

ILL.		Qty.	Year	Part #	Ref. #
MASTER OVERHAUL KITS (WITH STEELS)					
N.I.	P111	1	00-03	33002Z	N.L.
GASKETS & O-RINGS					
N.I.	Pan Gasket	1	00-03	33300Z	N.L.
METAL CLAD SEALS					
N.I.	Input	1	00-03	33070Z	N.L.
N.I.	Axle Right (Bell)	1	00-03	33076Z	N.L.
N.I.	Axle Left (Case)	1	00-03	33077Z	N.L.
FILTERS					
N.I.	Screen, Tube	1	00-03	33010Z	N.L.
BUSHINGS					
N.I.	Bushing Kit	1	00-03	33030Z	N.L.
N.I.	Sun Gear	2	00-03	33052Z	N.L.
N.I.	Motor Generator 2 (Front)	1	00-03	33057Z	N.L.
N.I.	Motor Generator 2 (Rear)	2	00-03	33059Z	N.L.
THRUST WASHERS/BEARINGS					
WASHERS					
N.I.	Drive Gear	1	00-03	33279Z	N.L.
BEARINGS					
N.I.	Planet (Rear)	1	00-03	33238Z	N.L.
N.I.	Planet (Front)	2	00-03	33239Z	N.L.
ELECTRICAL COMPONENTS					
N.I.	Sensor, ISS	1	00-03	33438Z	N.L.
N.I.	Motor Generator Terminal 1	1	00-03	33454Z	N.L.
N.I.	Motor Generator Terminal 2	1	00-03	33454ZA	N.L.
N.I.	Motor Generator 1	1	00-03	33456Z	N.L.
N.I.	Motor Generator 2	1	00-03	33456ZA	N.L.
N.I.	Armature 1	1	00-03	33457Z	N.L.
N.I.	Armature 2	1	00-03	33457ZA	N.L.
N.I.	Revolution Sensor 1	1	00-03	33458Z	N.L.
N.I.	Revolution Sensor 2	1	00-03	33458ZA	N.L.
PUMP COMPONENTS					
N.I.	Pump Cover	1	00-03	33520Z	N.L.
N.I.	Pump Gears	1	00-03	33530Z	N.L.
PLANETS AND COMPONENTS					
N.I.	Planet w/ Shaft	1	00-03	33582Z	N.L.
N.I.	Ring Gear	1	00-03	33592Z	N.L.
N.I.	Ring Gear Hub	1	00-03	33602Z	N.L.
SUN GEARS					
N.I.	Sun Gear, Forward	1	00-03	33612Z	N.L.
SHELLS & SUPPORTS					
N.I.	Support, Inner Race	1	00-03	33664Z	N.L.
SHAFTS					
N.I.	Pump	1	00-03	33671Z	N.L.
CHAINS AND SPROCKETS					
N.I.	Chain	1	00-03	33700Z	N.L.
N.I.	Drive Sprocket	1	00-03	33705Z	N.L.
N.I.	Driven Sprocket (Output Gear)	1	00-03	33706Z	N.L.
DIFFERENTIALS					
N.I.	Differential	1	00-03	33715Z	N.L.
N.I.	Transfer Gear w/ Pinion	1	00-03	33730Z	N.L.

ILL.		Qty.	Year	Part #	Ref. #
CASES/HOUSINGS & COMPONENTS					
N.I.	Bell Housing	1	00-03	33750Z	N.L.
N.I.	Bell Housing Cover	1	00-03	33758Z	N.L.
N.I.	Case	1	00-03	33760Z	N.L.
N.I.	Pan, Lower	1	00-03	33765Z	N.L.
N.I.	Cover, End (Pump)	1	00-03	33759Z	N.L.
N.I.	Cover, Cooler Reservoir	1	00-03	33769Z	N.L.

Notes

ILL.		Qty.	Year	Part #	Ref. #
MASTER OVERHAUL KITS (WITH STEELS)					
N.I.	AA80E	1	07-Up	287006	N.L.
MASTER OVERHAUL KITS (LESS STEELS)					
N.I.	AA80E	1	07-Up	287004	N.L.
OVERHAUL KITS (WITH RINGS AND SEALS)					
N.I.	AA80E	1	07-Up	287002	N.L.
GASKETS & O-RINGS					
N.I.	Gasket, Pan	1	07-Up	287300	N.L.
N.I.	0-Ring, Pump	1	07-Up	287311	N.L.
N.I.	0-Ring, Pump Cover	1	07-Up	287313	N.L.
N.I.	Gasket Kit, Valve Body	1	07-Up	287320K	N.L.
METAL CLAD SEALS					
N.I.	Pump	1	07-Up	287070	N.L.
N.I.	Manual Lever Shaft	1	07-Up	287072	N.L.
N.I.	Extension Housing	1	07-Up	287074	N.L.
SEALING RINGS & KITS					
N.I.	Sealing Ring Kit	1	07-Up	287175K	N.L.
N.I.	Input Shaft (Front)	3	07-Up	287177	N.L.
N.I.	Input Shaft (Rear)	2	07-Up	287177	N.L.
N.I.	Stator	4	07-Up	287179	N.L.
N.I.	Direct Drum (Rear)	2	07-Up	287180	N.L.
N.I.	Direct Drum (Front)	1	07-Up	287181	N.L.
N.I.	Output Shaft	3	07-Up	287189	N.L.
FRICTION PLATES					
N.I.	Overdrive Direct	4	07-Up	287100	N.L.
N.I.	B1	5	07-Up	287104	N.L.
N.I.	Direct	6	07-Up	287106	N.L.
N.I.	Forward	6	07-Up	287108	N.L.
N.I.	Reverse	5	07-Up	287110	N.L.
N.I.	B2	4	07-Up	287114	N.L.
STEEL PLATES					
N.I.	Overdrive Direct	4	07-Up	287120	N.L.
N.I.	B1	5	07-Up	287124	N.L.
N.I.	Direct	6	07-Up	287126	N.L.
N.I.	Forward	6	07-Up	287128	N.L.
N.I.	Reverse	5	07-Up	287130	N.L.
N.I.	82	4	07-Up	287134	N.L.
PRESSURE PLATES					
N.I.	Overdrive Direct	1	07-Up	287140	N.L.
N.I.	B1	1	07-Up	287144	N.L.
N.I.	Direct	1	07-Up	287146	N.L.
N.I.	Forward	1	07-Up	287148	N.L.
N.I.	Reverse	1	07-Up	287150	N.L.
N.I.	82 (Backing Plate)	1	07-Up	287154	N.L.
N.I.	B2 (Apply Plate)	1	07-Up	287155	N.L.
FILTERS					
N.I.	Main	1	07-Up	287010	N.L.
FILTER KITS					
N.I.	AA80E	1	07-Up	287011	N.L.
BUSHINGS					
N.I.	Pump	1	07-Up	287034	N.L.
N.I.	Stator (Front)	1	07-Up	287036	N.L.
N.I.	Overdrive Drum (Front)	1	07-Up	287038	N.L.
N.I.	Overdrive Drum (Rear)	1	07-Up	287039	N.L.
N.I.	Forward Drum	1	07-Up	287048	N.L.
N.I.	Forward Sun Gear	2	07-Up	287054	N.L.

ILL.		Qty.	Year	Part #	Ref. #
BUSHINGS (Cont.)					
N.I.	Reverse Sun Gear	2	07-Up	287056	N.L.
N.I.	Rear Planet (Front)	1	07-Up	287058	N.L.
N.I.	Rear Planet (Rear)	1	07-Up	287059	
THRUST WASHERS/BEARINGS					
WASHERS					
N.I.	Stator	1	07-Up	287211	N.L.
N.I.	Front Planet	1	07-Up	287217	N.L.
N.I.	Output Shaft (Spacer)	1	07-Up	287244	N.L.
N.I.	Output Shaft (Shim)	1	07-Up	287245	N.L.
BEARINGS					
N.I.	Front Planet, Bearing & Race	1	07-Up	287220	N.L.
N.I.	Direct Drum, Bearing & Race	1	07-Up	287229	N.L.
N.I.	Forward Drum, Bearing & Race	1	07-Up	287232	N.L.
N.I.	Forward Hub , Bearing & Race	1	07-Up	287235	N.L.
N.I.	Reverse Sun Gear, Bearing & Race	1	07-Up	287247	N.L.
N.I.	Rear Planet, Bearing & Race (Rear)	1	07-Up	287251	N.L.
N.I.	Rear Planet, Bearing & Race (Front)	1	07-Up	287254	N.L.
N.I.	Case, Bearing & Race	1	07-Up	287268	N.L.
N.I.	Case (Caged)	1	07-Up	287262	N.L.
N.I.	Case Bearing	1	07-Up	287263	N.L.
N.I.	Output Shaft (Caged)	1	07-Up	287271	N.L.
N.I.	Input Shaft (Caged)	1	07-Up	287287	N.L.
ELECTRICAL COMPONENTS					
N.I.	Switch, MLPS	1	07-Up	287410	N.L.
N.I.	Switch, Pressure	1	07-Up	287411	N.L.
N.I.	Solenoid, Brown Connector	1	07-Up	287421	N.L.
N.I.	Solenoid, Black Connector	4	07-Up	287422	N.L.
N.I.	Solenoid, Black Connector (Small)	1	07-Up	287423	N.L.
N.I.	Solenoid, Black Connector (Medium)	1	07-Up	287425	N.L.
N.I.	Solenoid, Black Connector (Next to Accumulator)	1	07-Up	287426	N.L.
N.I.	Solenoid, Green Connector	1	07-Up	287427	N.L.
N.I.	Sensor, ISS	1	07-Up	287438	N.L.
N.I.	Harness w/ Connector	1	07-Up	287446	N.L.
PUMPS					
N.I.	Pump	1	07-Up	287500	N.L.
N.I.	Pump Body w/ Gears	1	07-Up	287510	N.L.
PUMP COMPONENTS					
N.I.	Pump Stator	1	07-Up	287520	N.L.
N.I.	Pump Gears (GEROTOR)	1	07-Up	287530	N.L.
DRUMS & COMPONENTS					
N.I.	Overdrive Direct	1	07-Up	287551	N.L.
N.I.	Forward	1	07-Up	287554	N.L.
N.I.	Direct	1	07-Up	287555	N.L.
N.I.	Reverse	1	07-Up	287556	N.L.
N.I.	Hub, Forward	1	07-Up	287574	N.L.
N.I.	Hub, Direct	1	07-Up	287575	N.L.
N.I.	Cushion, Forward	1	07-Up	287853	N.L.
N.I.	Cushion, Reverse	1	07-Up	287854	N.L.
N.I.	Piston, Direct	1	07-Up	287960	N.L.
N.I.	Piston, Overdrive Direct	1	07-Up	287961	N.L.
N.I.	Piston, B1	1	07-Up	287962	N.L.
N.I.	Piston, Forward	1	07-Up	287964	N.L.
N.I.	Piston, Reverse	1	07-Up	287966	N.L.
N.I.	Piston, B2	1	07-Up	287968	N.L.
N.I.	Return Spring, Direct	1	07-Up	287970	N.L.
N.I.	Return Spring, Overdrive Direct	1	07-Up	287971	N.L.
N.I.	Return Spring, B1	1	07-Up	287972	N.L.
N.I.	Return Spring, Forward	1	07-Up	287974	N.L.
N.I.	Return Spring, Reverse	1	07-Up	287976	N.L.

ILL.		Qty.	Year	Part #	Ref. #
DRUMS & COMPONENTS (Cont.)					
N.I.	Return Spring, B2	1	07-Up	287978	N.L.
N.I.	Retainer, Direct	1	07-Up	287980	N.L.
N.I.	Retainer, Overdrive Direct	1	07-Up	287981	N.L.
N.I.	Retainer, Forward	1	07-Up	287984	N.L.
N.I.	Retainer, Reverse	1	07-Up	287986	N.L.
PLANETS AND COMPONENTS					
N.I.	Planet, Front	1	07-Up	287582	N.L.
N.I.	Planet, Rear Compound	1	07-Up	287584	N.L.
N.I.	Ring Gear, Front	1	07-Up	287592	N.L.
N.I.	Ring Gear, Rear	1	07-Up	287594	N.L.
SUN GEARS					
N.I.	Sun Gear, Front	1	07-Up	287610	N.L.
N.I.	Sun Gear, Forward	1	07-Up	287612	N.L.
N.I.	Sun Gear, Reverse w/ Shell	1	07-Up	287624	N.L.
ONE WAY CLUTCHES					
N.I.	Sprag	1	07-Up	287654	N.L.
N.I.	Outer Race	1	07-Up	287655	N.L.
N.I.	Inner Race	1	07-Up	287664	N.L.
N.I.	Inner Race Wave Spring	1	07-Up	287665	N.L.
N.I.	Inner Race Retainer	1	07-Up	287666	N.L.
SHAFTS					
N.I.	Output Shaft	1	07-Up	287678	N.L.
VALVE BODIES & GOVERNORS					
N.I.	Valve Body	1	07-Up	287740	N.L.
CASES/HOUSINGS & COMPONENTS					
N.I.	Case	1	07-Up	287760	N.L.
N.I.	Bottom Pan	1	07-Up	287765	N.L.
MISCELLANEOUS COMPONENTS					
N.I.	Nut, Output Flange	1	07-Up	287798	N.L.
N.I.	Output Flange	1	07-Up	287841	N.L.

Notes

Notes

ILL.		Qty.	Year	Part #	Ref. #
MASTER OVERHAUL KITS (WITH STEELS)					
N.I.	w/o Differential Components (Exc. 83-Up Audi 5000)	1	75-Up	65006	N.L.
N.I.	w/ Differential Components (VW 010)	1	75-Up	65006A	N.L.
N.I.	w/ Differential Components 087 (Audi 5000)	1	77-82	65006B	N.L.
N.I.	w/ Differential Components 087 (Audi 5000)	1	83-Up	65006BA	N.L.
N.I.	w/ Differential Components 089 (Audi 4000)	1	75-Up	65006C	N.L.
N.I.	w/ Differential Components 090	1	75-Up	65006D	N.L.
MASTER OVERHAUL KITS (LESS STEELS)					
N.I.	w/o Differential Components (Exc. 83-Up Audi 5000)	1	75-Up	65004	N.L.
N.I.	w/ Differential Components (VW 010)	1	75-Up	65004A	N.L.
N.I.	w/ Differential Components 087 (Audi 5000)	1	77-82	65004B	N.L.
N.I.	w/ Differential Components 087 (Audi 5000)	1	83-Up	65004BA	N.L.
N.I.	w/ Differential Components 089 (Audi 4000)	1	75-Up	65004C	N.L.
N.I.	w/ Differential Components 090	1	75-Up	65004D	N.L.
OVERHAUL KITS (WITH RINGS AND SEALS)					
N.I.	w/o Differential Components (All)	1	75-Up	65002	N.L.
N.I.	w/ Differential Components (VW 010)	1	75-Up	65002A	N.L.
N.I.	w/ Differential Components 087 (Audi 5000)	1	77-Up	65002B	N.L.
N.I.	w/ Differential Components 089 (Audi 4000)	1	75-Up	65002C	N.L.
N.I.	w/ Differential Components 090	1	75-Up	65002D	N.L.
BONDED PISTONS					
N.I.	Piston Kit	1	75-Up	65960K	N.L.
N.I.	Piston, Reverse Clutch (w/o Check Ball) (Bonded)	1	75-Up	65962	N.L.
N.I.	Piston, Reverse Clutch (w/ Check Ball) (Bonded)	1	75-Up	65962A	N.L.
N.I.	Piston, Forward Clutch (Bonded)	1	75-Up	65964	N.L.
N.I.	Piston, Direct Clutch (Bonded)	1	75-Up	65965	N.L.
GASKETS & O-RINGS					
N.I.	Pan, Bottom (Exc. 090)	1	75-Up	65300	N.L.
N.I.	Lathe Cut Seal, Differential Housing to Case	1	75-Up	65303	N.L.
N.I.	Gasket, Transmission Plate to Differential	2	75-Up	65305	N.L.
N.I.	Gasket, Round Filter to Valve Body	1	75-Up	65326	N.L.
METAL CLAD SEALS					
N.I.	Front (Exc. 090)	1	75-Up	65070	N.L.
N.I.	Front (090)	1	75-Up	265070	N.L.
N.I.	Axle (Both Sides) 010	2	79-83	65076	N.L.
N.I.	Axle (Both Sides) 010	2	84-Up	65076A	N.L.
N.I.	Axle (Both Sides) 087 089 090	2	75-Up	65076B	N.L.
SEALING RINGS & KITS					
N.I.	Ring Kit	1	75-Up	65175K	N.L.
FRICTION PLATES					
N.I.	Direct (4.75 OD)	3-5	75-Up	65106	N.L.
N.I.	Direct (5.00 OD)	5	83-Up	65106A	N.L.
N.I.	Forward (Gas)	3-5	75-Up	65106B	N.L.
N.I.	Forward (Diesel)	3-5	75-Up	65106C	N.L.
N.I.	Low & Reverse	4-5	75-Up	65104	N.L.
STEEL PLATES					
N.I.	Direct (17T)	3-5	75-Up	65126	N.L.
N.I.	Direct (53T)	5	83-Up	65126A	N.L.
N.I.	Forward	2-4	75-Up	65126	N.L.
N.I.	Low & Reverse	3-5	75-Up	65124	N.L.
FILTERS					
N.I.	Rectangular	1	75-76	65010	N.L.
N.I.	Round	1	77-Up	65010A	N.L.
FILTER KITS					
N.I.	Rectangular	1	75-76	65011	N.L.
N.I.	Round	1	77-Up	65011A	N.L.

ILL.		Qty.	Year	Part #	Ref. #
BANDS					
N.I.	Band	1	75-Up	65022	N.L.
BUSHINGS					
N.I.	Bushing Kit	1	75-Up	65030	N.L.
N.I.	Converter Hub	1	75-Up	65035	N.L.
N.I.	Converter Reactor	1	75-Up	65032	N.L.
N.I.	Pump Gear & Converter Hub	2	75-Up	65035	N.L.
N.I.	Turbine Shaft Pilot	1	75-Up	65037	N.L.
N.I.	Direct Drum	1	75-Up	65046	N.L.
N.I.	Sun Gear	2	75-Up	65052	N.L.
THRUST WASHERS/BEARINGS					
WASHERS					
	Pump	1	75-Up	65211	N.L.
PUMPS					
N.I.	Stator w/ Gears	1	75-Up	65520	N.L.
DRUMS & COMPONENTS					
N.I.	Piston, Reverse Clutch (w/o Check Ball) (Bonded)	1	75-Up	65962	N.L.
N.I.	Piston, Reverse Clutch (w/ Check Ball) (Bonded)	1	75-Up	65962A	N.L.
N.I.	Piston, Forward Clutch (Bonded)	1	75-Up	65964	N.L.
N.I.	Piston, Direct Clutch (Bonded)	1	75-Up	65965	N.L.
PLANETS AND COMPONENTS					
N.I.	Front (26T Sun Gear)	1	75-Up	65582A	N.L.
N.I.	Front (28T Sun Gear)	1	75-Up	65582B	N.L.
MISCELLANEOUS COMPONENTS					
N.I.	Gear, Governor (13T Plastic) (Hollow)	1	75-82	65684AA	N.L.
N.I.	Gear, Governor (16T) (Hollow)	1	75-82	65684CA	N.L.
N.I.	Gear, Governor (16T) (Shank)	1	83-Up	65684B	N.L.
N.I.	Gear Kit, 010 Governor (18T)	1	75-Up	65684D	N.L.
N.I.	Spring, Diaphragm Forward Clutch (16 Lug)	1	75-Up	65974A	N.L.
SERVOS AND ACCUMULATORS					
N.I.	Piston, Accumulator w/ Lip Seal (Early)	1	75-Up	65927A	N.L.
TECHNICAL MANUALS					
N.I.	Technical Manual	1	75-Up	65400	N.L.

Notes

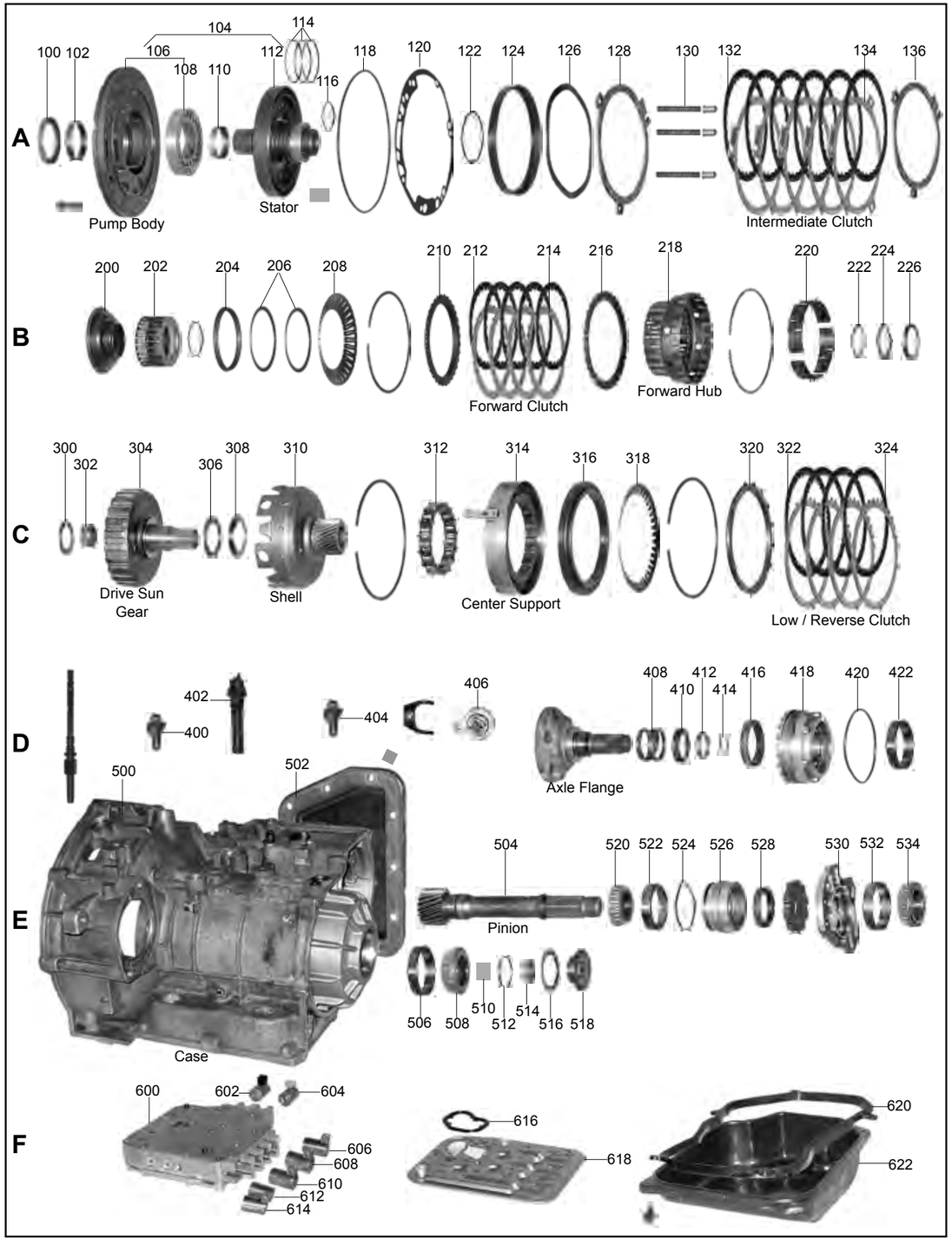
A
100 102 104 106 108 110 112 114 116 118 120 122 124 126 128 130 132 134 136
Pump Body
Stator
Intermediate Clutch
B
200 202 204 206 208 210 212 214 216 218 220 222 224 226
Forward Clutch
Forward Hub
C
300 302 304 306 308 310 312 314 316 318 320 322 324
Drive Sun Gear
Shell
Center Support
Low / Reverse Clutch
D
400 402 404 406 408 410 412 414 416 418 420 422
Axle Flange
E
500 502 504 506 508 510 512 514 516 518 520 522 524 526 528 530 532 534
Case
Pinion
F
600 602 604 606 608 610 612 614 616 618 620 622

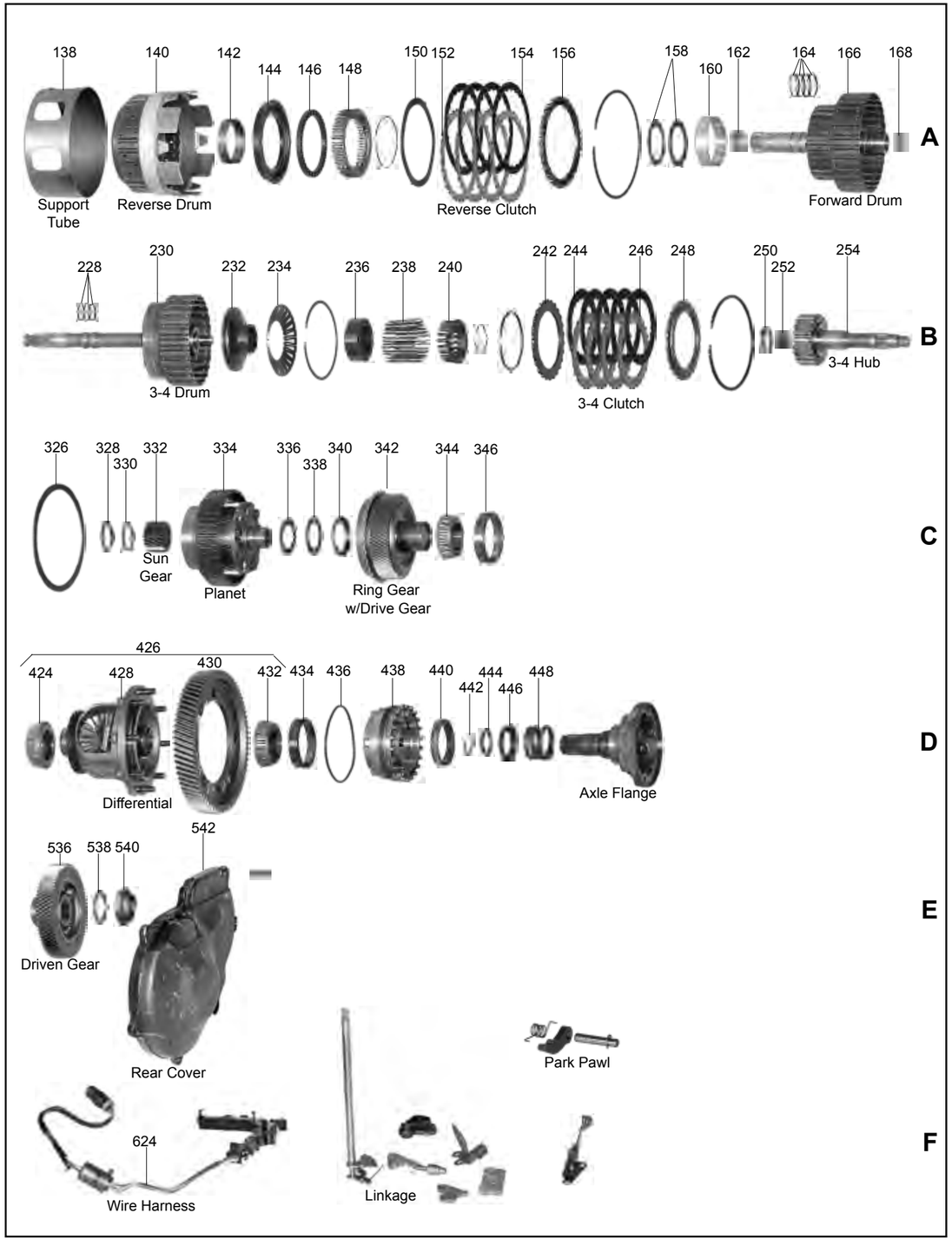
A
138 140 142 144 146 148 150 152 154 156 158 160 162 164 166 168
Support Tube
Reverse Drum
Reverse Clutch
Forward Drum
B
228 230 232 234 236 238 240 242 244 246 248 250 252 254
3-4 Drum
3-4 Clutch
3-4 Hub
C
326 328 330 332 334 336 338 340 342 344 346
Sun Gear
Planet
Ring Gear w/Drive Gear
D
424 426 428 430 432 434 436 438 440 442 444 446 448
Differential
Axle Flange
E
536 538 540 542
Driven Gear
Rear Cover
Park Pawl
F
624
Wire Harness
Linkage

ILL.		Qty.	Year	Part #	Ref. #
MASTER OVERHAUL KITS (WITH STEELS)					
N.I.	w/ Molded Pistons, 095, 096	1	90-E94	75006AA	N.L.
N.I.	w/ Molded Pistons, 096 (01M)	1	L94-Up	75006AB	N.L.
N.I.	w/ Molded Pistons, 096 (01M) (w/ single sided K3 Frictions)	1	00-Up	75006AC	N.L.
N.I.	w/ Molded Pistons, 097	1	91-E94	75006CA	N.L.
N.I.	w/ Molded Pistons, 097 (01N)	1	L94-Up	75006CB	N.L.
N.I.	w/ Molded Pistons, 098	1	92-E94	75006DA	N.L.
N.I.	w/ Molded Pistons, 098 (01P)	1	L94-Up	75006DB	N.L.
MASTER OVERHAUL KITS (LESS STEELS)					
N.I.	w/ Molded Pistons, 095, 096	1	90-E94	75004AA	N.L.
N.I.	w/ Molded Pistons, 096 (01M)	1	L94-Up	75004AB	N.L.
N.I.	w/ Molded Pistons, 096 (01M) (w/ single sided K3 Frictions)	1	00-Up	75004AC	N.L.
N.I.	w/ Molded Pistons, 097	1	91-E94	75004CA	N.L.
N.I.	w/ Molded Pistons, 097 (01N)	1	L94-Up	75004CB	N.L.
N.I.	w/ Molded Pistons, 098	1	92-E94	75004DA	N.L.
N.I.	w/ Molded Pistons, 098 (01P)	1	L94-Up	75004DB	N.L.
OVERHAUL KITS (WITH RINGS AND SEALS)					
N.I.	095, 096 (01M) (w/o Pistons)	1	90-Up	75002A	N.L.
N.I.	097 (01N) (w/o Pistons)	1	91-Up	75002C	N.L.
N.I.	098 (01P) (w/o Pistons)	1	92-Up	75002D	N.L.
BONDED PISTONS					
N.I.	Piston Set (Bonded) (5 Piston Trans)	1	90-E94	75960AK	N.L.
N.I.	Piston Set (Bonded) (7 Piston Trans)	1	L94-Up	75960BK	N.L.
124A	Piston, 2-4 Clutch (B2) (Bonded)	1	90-Up	75962	095-323-531B
144A	Piston, Reverse Clutch (K2) (Bonded)	1	90-Up	75966	095-323-121E
200B	Piston, Forward (K1) (Bonded)	1	90-E94	75964	095-323-217B
200B	Piston, Forward (K1) (Bonded)	1	L94-Up	75964A	095-323-217G
204B	Piston Retainer, Forward Clutch (Bonded)	1	L94-Up	75964B	095-323-257
232B	Piston, 3-4 Clutch (K3) (Bonded)	1	90-E94	75961	095-323-927A
232B	Piston, 3-4 Clutch (K3) (Bonded)	1	L94-Up	75961A	095-323-927G
240B	Piston Retainer, 3-4 Clutch (Bonded)	1	L94-Up	75961B	095-323-977C
316C	Piston, Low/ Reverse (B1) (Bonded)	1	90-Up	75967	095-323-479
GASKETS & O-RINGS					
118A	O-Ring, Pump	1	90-Up	75311A	095-321-386
120A	Gasket, Pump	1	90-L94	75310A	095-321-385A
120A	Gasket, Pump (1/95-Up)	1	E95-Up	75310B	N.L.
620F	Gasket, Bottom Pan 095, 096 (01M)	1	90-Up	75300A	095-321-371
620F	Gasket, Bottom Pan 097 (01N)	1	90-E95	75300C	097-321-371
620F	Gasket, Bottom Pan 097 (01N)	1	L95-Up	75300E	01N-321-370
620F	Gasket, Bottom Pan 098 (01P)	1	90-Up	75300D	098-321-370
N.I.	Gasket, End Cover (Bonded) (095, 096)	1	90-Up	75304A	096-321-488
N.I.	Gasket, End Cover (Bonded) (098)	1	92-94	75304B	N.L.
N.I.	Gasket, End Cover (Bonded) (098)	1	95-Up	75304C	N.L.
METAL CLAD SEALS					
100A	Front	1	90-Up	75070A	095-321-243D
416D	Axle (Both Sides) (095, 096, 01M)	2	90-Up	65076A	020-301-189M
416D	Axle (Both Sides) (098, 01P)	2	90-Up	65076B	016-409-399B
N.I.	Axle (Right) (097,01N)	1	90-Up	75076	097-409-399A
N.I.	End Cap, Output / Pinion Gears (097,01N)	1	90-Up	75080	097-321-073A
N.I.	End Cap, End Cover (097,01N)	1	90-Up	75081	097-321-491A
SEALING RINGS & KITS					
N.I.	Ring Kit	1	90-Up	75175AK	N.L.
FRICTION PLATES					
132A	Intermediate (B2)	5-6	90-Up	75104A	095-323-465D
154A	Reverse (K2)	4-5	90-Up	75108A	095-323-241A
212B	Forward (K1)	4-5	90-Up	75108A	095-323-241A
244B	3-4 Clutch (K3) (3.75" OD)	4-6	90-95	75100A	095-323-941A
244B	3-4 Clutch (K3) (4.00" OD)	4-6	96-Up	75100AB	095-323-941C
244B	3-4 Clutch (K3) (w/ Single Sided Friction, Internal Teeth) 01M	7	00-Up	75100B	N.L.
246B	3-4 Clutch (K3) (w/ Single Sided, External Teeth) 01M	6	00-Up	75120B	N.L.

ILL.		Qty.	Year	Part #	Ref. #
FRICTION PLATES (Cont.)					
248B	Backing Plate, 3-4 Clutch (K3) (Single Sided Design)	1	00-Up	75140B	N.L.
322C	Low/ Reverse (B1) (Smooth)	4-6	90-Up	75114A	095-323-231A
322C	Low/ Reverse (B1) (Grooved)	4-6	90-Up	75114B	N.L.
STEEL PLATES					
134A	Intermediate (B2) (.079")	5-6	90-Up	75124A	097-323-463
134A	Intermediate (B2) (.089")	AR	90-Up	75124AA	N.L.
134A	Intermediate (B2) (.098")	AR	90-Up	75124AB	N.L.
134A	Intermediate (B2) (.118")	AR	90-Up	75124AD	N.L.
152A	Reverse (K2)	5	90-Up	75128A	N.L.
214B	Forward (K1) (.079")	4-5	90-95	75128A	N.L.
214B	Forward (K1) (.057")	4-5	96-Up	75128AA	N.L.
246B	3-4 Clutch (K3) (.079") (3.75" OD)	3-5	90-95	75120A	N.L.
246B	3-4 Clutch (K3) (.057") (4.00" OD)	3-5	96-Up	75120AA	N.L.
246B	3-4 Clutch (K3) (.063") (4.00" OD)	3-4	96-Up	75120AB	N.L.
246B	3-4 Clutch (K3) (.079") (4.00" OD)	3-4	96-Up	75120AC	N.L.
324C	Low/ Reverse (B1) (.079")	5	90-95	75134A	095-323-227
324C	Low/ Reverse (B1) (.057")	5-6	96-Up	75134AA	N.L.
PRESSURE PLATES					
242B	Apply Plate, 3-4 Clutch (K3)	1	90-Up	75141A	N.L.
248B	Backing Plate, 3-4 Clutch (K3) (Single Sided Design)	1	90-Up	75140A	N.L.
248B	Backing Plate, 3-4 Clutch (K3) (Single Sided Design)	1	00-Up	75140B	N.L.
FILTERS					
618F	Filter (Round Inlet, Oval Outlet) (90-1/95)	1	90-E95	75010A	095-325-429D
618F	Filter (Round Inlet, Round Outlet) (2/95-Up)	1	L95-Up	75010C	01M-325-429
FILTER KITS					
N.I.	Filter Kit (Round Inlet, Oval Outlet) (90-1/95)	1	90-E95	75011A	N.L.
N.I.	Filter Kit (Round Inlet, Round Outlet) (2/95-Up)	1	L95-Up	75011C	N.L.
BUSHINGS					
N.I.	Bushing Kit	1	90-Up	75030A	N.L.
102A	Pump Body	1	90-Up	75034A	N.L.
160A	Forward Drum To Stator	1	90-Up	75037A	N.L.
220B	Nylon Insert, "E" Drum (.650" Wide)	4	90-Up	75050B	N.L.
220B	Nylon Insert, "E" Drum (.770" Wide)	4	90-Up	75050A	N.L.
THRUST WASHERS/BEARINGS					
WASHERS					
122A	Stator To Reverse Drum (Plastic)	1	90-Up	75211A	095-323-345
158A	Rev Clutch Drum To Forward Clutch Drum (Plastic # 3)	1	90-Up	75229A	095-323-345
ELECTRICAL COMPONENTS					
400D	Sensor, Input/Output (Short)	2	90-Up	75438	N.L.
400D	Sensor, Output (Long)	1	90-Up	75436A	N.L.
406D	Switch, Multi Function (PRNDL) (7 Prong Square)	1	90-E94	75410	N.L.
406D	Switch, Multi Function (PRNDL) (7 Prong Round)	1	L94-97	75410A	095-919-823B
406D	Switch, Multi Function (PRNDL) (7 Prong 90°)	1	98-Up	75410B	095-919-823F
602F	Solenoid, Electric Pressure Control (EPC)	1-2	90-Up	75431A	119954-01
614F	Solenoid, Shift	5-6	90-Up	75421A	119952-01
624F	Wire Harness, Internal w/ Connector 095, 096 (15" Long)	1	90-94	75446A	119957
624F	Wire Harness, Internal w/ Connector 01M (18.5" Long)	1	94-Up	75446B	119957A
624F	Wire Harness, Internal w/ Connector 097, 01N	1	91-Up	75446C	119957B
624F	Wire Harness, Internal w/ Connector 098, 01P	1	92-Up	75446D	119957C
VALVE BODY RECALIBRATION KITS					
N.I.	Shift Kit®, VW 01M (95-04) (Transgo®)	1	95-04	T75165	SK® VW 01M
VALVE BODY COMPONENTS					
N.I.	Kit, Bore Plug	1	90-Up	75741G	N.L.
N.I.	Plug, Pressure Adjust (Threaded)	1	90-Up	75741F	N.L.

095, 096 (01M), 097 (01N), 098 (01P)

FWD
4 SPEED
AG4

ILL.		Qty.	Year	Part #	Ref. #
PUMPS					
104A	Pump Assembly, 095-098 (Damper Type)	1	90-94	75500	N.L.
104A	Pump Assembly, 01M, 01N, 01P (Lock-Up Type)	1	94-Up	75500A	N.L.
DRUMS & COMPONENTS					
124A	Piston, 2-4 Clutch (B2) (Bonded)	1	90-Up	75962	095-323-531B
140A	Drum, Reverse (5 Clutch) (095-098, 01M)	1	90-Up	75556A	N.L.
144A	Piston, Reverse Clutch (K2) (Bonded)	1	90-Up	75966	095-323-121E
166A	Drum, Forward w/ Hollow Shaft (5 Clutch)	1	90-94	75554A	N.L.
166A	Drum, Forward w/ Solid Shaft (5 Clutch)	1	95-Up	75554B	N.L.
200B	Piston, Forward (K1) (Bonded)	1	90-E94	75964	095-323-217B
200B	Piston, Forward (K1) (Bonded)	1	L94-Up	75964A	095-323-217G
204B	Piston Retainer, Forward Clutch (Bonded)	1	L94-Up	75964B	095-323-257
230B	Drum, 3-4/Direct w/ Hollow Shaft (4 Clutch)	1	90-94	75550A	N.L.
230B	Drum, 3-4/Direct w/ Solid Shaft (4 Clutch)	1	95-Up	75550B	N.L.
232B	Piston, 3-4 Clutch (K3) (Bonded)	1	90-E94	75961	095-323-927A
232B	Piston, 3-4 Clutch (K3) (Bonded)	1	L94-Up	75961A	095-323-927G
240B	Piston Retainer, 3-4 Clutch (Bonded)	1	L94-Up	75961B	095-323-977C
316C	Piston, Low/ Reverse (B1) (Bonded)	1	90-Up	75967	095-323-479
N.I.	Piston Set (Bonded) (5 Piston Trans)	1	90-E94	75960AK	N.L.
N.I.	Piston Set (Bonded) (7 Piston Trans)	1	L94-Up	75960BK	N.L.
PLANETS AND COMPONENTS					
334C	Planet, Rear (096)	1	90-Up	75584	N.L.
SUN GEARS					
310C	Shell w/ Sun Gear (24T)	1	90-Up	75622B	N.L.
ONE WAY CLUTCHES					
312C	Roller Clutch, Low	1	90-Up	75654AA	1696655
SHELLS & SUPPORTS					
314C	Center Support w/ Sprag	1	90-Up	75630A	N.L.
SHAFTS					
304C	Hub, Drive w/ Hollow Shaft	1	90-Up	75624A	N.L.
VALVE BODIES & GOVERNORS					
600F	Valve Body (095, 096) (Kidney Shaped Filter Area)	1	90-94	75740-4	N.L.
600F	Valve Body (Lock-Up)	1	94-96	75740-1	N.L.
600F	Valve Body (Lock-Up)	1	97-98	75740-2	N.L.
600F	Valve Body (Lock-Up)	1	99-Up	75740-3	N.L.
MISCELLANEOUS COMPONENTS					
N.I.	Kit, Cooler Adapter (095)	1	90-Up	75496K	N.L.
TECHNICAL MANUALS					
N.I.	Technical Manual (Exc. 01M Passat)	1	90-Up	75400A	N.L.
N.I.	Diagnostic Guide (01M)	1	90-Up	75400D	N.L.
TOOLS					
N.I.	Pinion Shaft Remover Kit (095, 096, 01M)	1	90-Up	T-7500	N.L.

FWD
4 SPEED

JF404E

ILL.		Qty.	Year	Part #	Ref. #
MASTER OVERHAUL KITS (WITH STEELS)					
N.I.	JF404E	1	99-Up	83006G	N.L.
MASTER OVERHAUL KITS (LESS STEELS)					
N.I.	JF404E	1	99-Up	83004G	N.L.
OVERHAUL KITS (WITH RINGS AND SEALS)					
N.I.	JF404E	1	99-Up	83002G	N.L.
GASKETS & O-RINGS					
N.I.	Gasket, Pan	1	99-Up	83300G	N.L.
N.I.	O-Ring, Pump	1	99-Up	83311B	94385709
METAL CLAD SEALS					
N.I.	Pump	1	99-Up	98070	97031954
N.I.	Axle (Left//Right)	2	99-Up	83076G	N.L.
FRICTION PLATES					
N.I.	Direct	3	99-Up	83106G	N.L.
N.I.	Low	5	99-Up	83108G	N.L.
N.I.	Reverse	2	99-Up	83110G	N.L.
N.I.	Low/ Reverse	5	99-Up	83114G	N.L.
STEEL PLATES					
N.I.	Direct	5	99-Up	83126G	N.L.
N.I.	Low	5	99-Up	83128G	N.L.
N.I.	Reverse	2	99-Up	83130G	N.L.
N.I.	Low/ Reverse	4	99-Up	83134G	N.L.
FILTERS					
N.I.	Type A (L Shaped)	1	99-Up	83010G	N.L.
N.I.	Type B (Square Shaped)	1	99-Up	83010GA	N.L.
BANDS					
N.I.	2--4	1	99-Up	83020G	N.L.
BUSHINGS					
N.I.	Bushing Kit	1	99-Up	83030G	N.L.
ELECTRICAL COMPONENTS					
N.I.	Solenoid “A” (Type A) (Green Connector)	1	99-Up	83421A	N.L.
N.I.	Solenoid “B” (Type A) (Beige Connector)	1	99-Up	83421B	N.L.
N.I.	Solenoid “C” (Type A) (Blue Connector)	1	99-Up	83421C	N.L.
N.I.	Solenoid “D” (Type A) (Grey Connector)	1	99-Up	83422A	N.L.
N.I.	Solenoid “E” (Type A) (Red Connector)	1	99-Up	83422E	N.L.
N.I.	Solenoid (Type B) (Group) (A, B, C, D, F)	1	99-Up	83422A	N.L.
N.I.	Solenoid (Type B) (Group) (F)	1	99-Up	83422E	N.L.
ONE WAY CLUTCHES					
N.I.	Sprag, Low	1	99-Up	83658G	N.L.

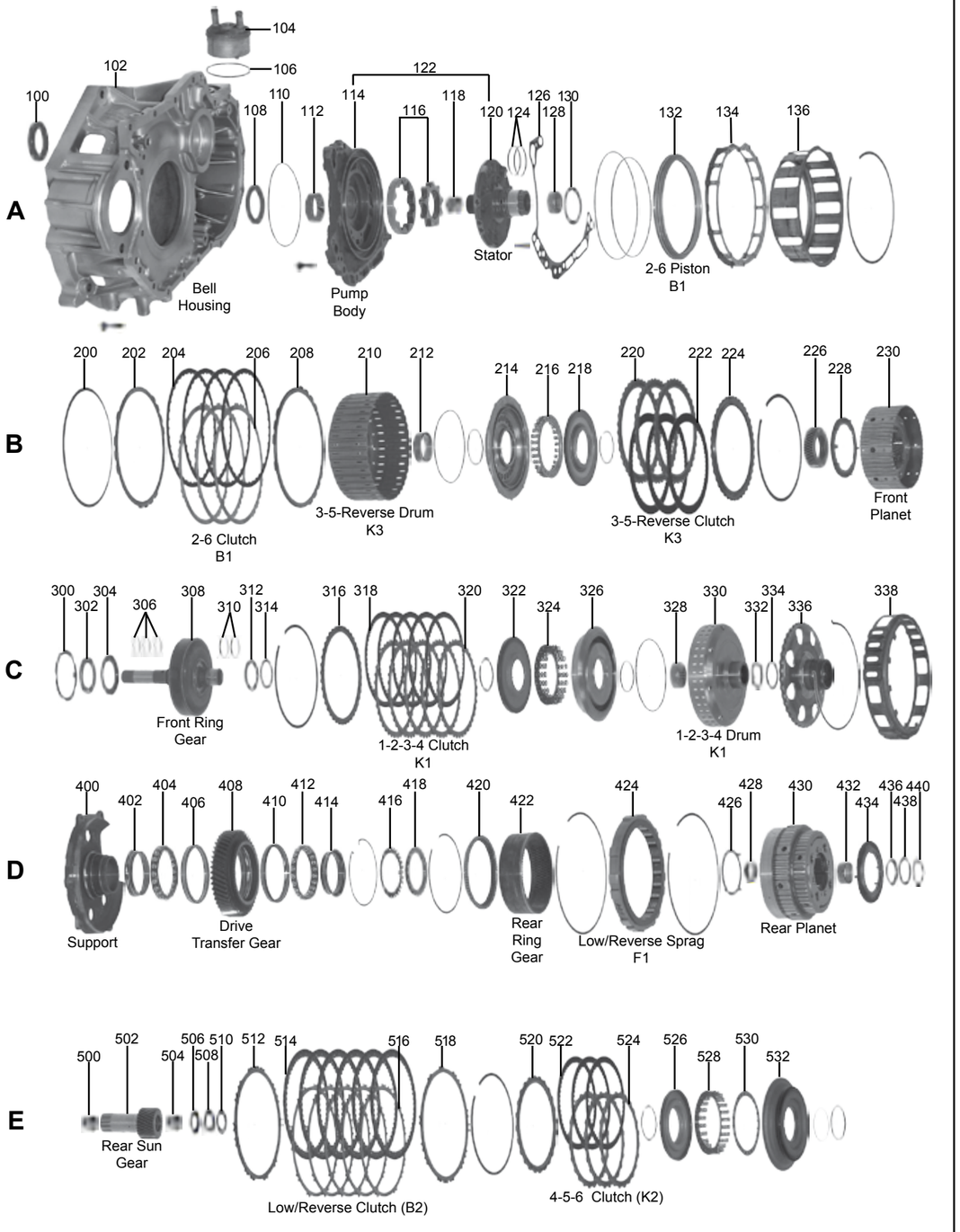
A
100
102
104
106
108
110
112
114
116
118
120
122
124
126
128
130
132
134
136
Bell Housing
Pump Body
Stator
2-6 Piston B1
B
200
202
204
206
208
210
212
214
216
218
220
222
224
226
228
230
2-6 Clutch B1
3-5-Reverse Drum K3
3-5-Reverse Clutch K3
Front Planet
C
300
302
304
306
308
310
312
314
316
318
320
322
324
326
328
330
332
334
336
338
Front Ring Gear
1-2-3-4 Clutch K1
1-2-3-4 Drum K1
D
400
402
404
406
408
410
412
414
416
418
420
422
424
426
428
430
432
434
436
438
440
Support
Drive Transfer Gear
Rear Ring Gear
Low/Reverse Sprag F1
Rear Planet
E
500
502
504
506
508
510
512
514
516
518
520
522
524
526
528
530
532
Rear Sun Gear
Low/Reverse Clutch (B2)
4-5-6 Clutch (K2)

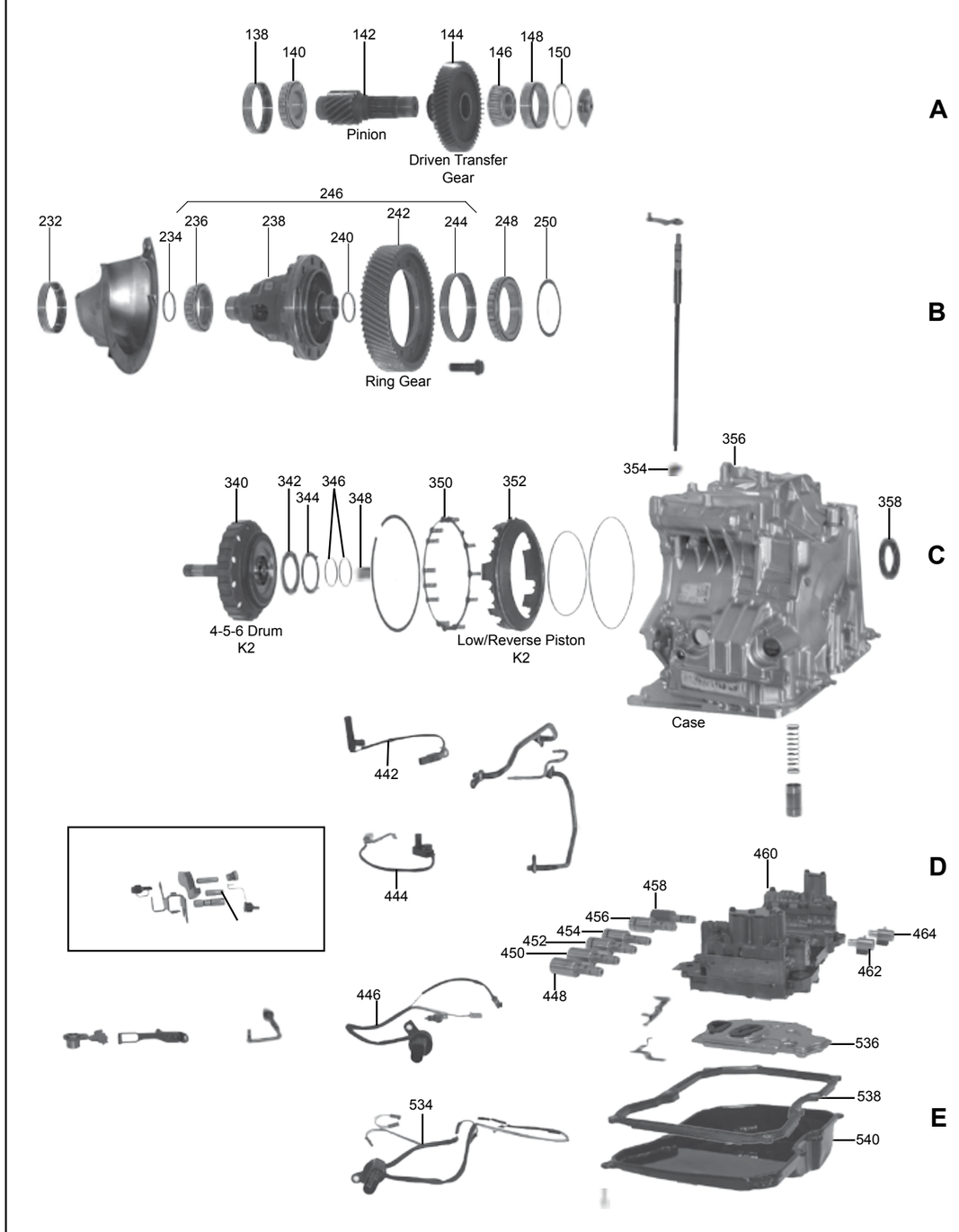
A
138
140
142
144
146
148
150
Pinion
Driven Transfer Gear
B
232
234
236
238
240
242
244
246
248
250
Ring Gear
C
340
342
344
346
348
350
352
354
356
358
4-5-6 Drum K2
Low/Reverse Piston K2
Case
442
444
D
446
448
450
452
454
456
458
460
462
464
536
538
534
540
E

ILL.		Qty.	Year	Part #	Ref. #
MASTER OVERHAUL KITS (WITH STEELS)					
N.I.	09G (TF60SN) (w/ Pistons) (With .067" K1 Friction)	1	03-Up	265006	N.L.
N.I.	09G (TF60SN) (w/ Pistons) (With .059" K1 Friction)	1	05-Up	265006A	N.L.
N.I.	09K (TF62SN) (w/Pistons)	1	03-Up	265006B	N.L.
N.I.	09M (w/Pistons)	1	06-Up	265006C	N.L.
MASTER OVERHAUL KITS (LESS STEELS)					
N.I.	09G (TF60SN) (w/ Pistons) (With .067" K1 Friction)	1	03-Up	265004	N.L.
N.I.	09G (TF60SN) (w/ Pistons) (With .059" K1 Friction)	1	05-Up	265004A	N.L.
N.I.	09K (TF62SN) (w/Pistons)	1	03-Up	265004B	N.L.
N.I.	09M (w/Pistons)	1	06-Up	265004C	N.L.
OVERHAUL KITS (WITH RINGS AND SEALS)					
N.I.	09G (TF60SN)	1	03-Up	265002	N.L.
N.I.	09K (TF62SN)	1	03-Up	265002B	N.L.
N.I.	09M (TF60SN)	1	06-Up	265002C	N.L.
BONDED PISTONS					
218B	Retainer, K3 (Balance Piston) (Bonded)	1	03-08	265985	N.L.
322C	Retainer, K1 (Balance Piston) (Bonded)	1	03-08	265984	N.L.
526E	Retainer, K2 (Balance Piston) (Bonded)	1	03-08	265980	N.L.
532E	Piston, K2 (Bonded)	1	03-08	265854	N.L.
N.I.	Piston Kit (Bonded)	1	03-08	265960K	N.L.
GASKETS & O-RINGS					
110A	O-Ring, Pump	1	03-Up	265311	N.L.
126A	Gasket, Pump	1	03-Up	265310	N.L.
538E	Gasket, Bottom Pan (09G) (8 Bolt) (Molded Rubber)	1	03-Up	265300	N.L.
538E	Gasket, Bottom Pan (09K) (7 Bolt) (Molded Rubber)	1	05-Up	265300A	N.L.
538E	Gasket, Bottom Pan (09M) (9 Bolt) (Molded Rubber)	1	06-Up	265300B	N.L.
METAL CLAD SEALS					
100A	Axle, Right (Bell) (09G)	1	03-Up	265076	N.L.
100A	Axle, Right (Bell) (09K)	1	05-Up	265076A	N.L.
108A	Converter	1	03-Up	265070	N.L.
354C	Manual Lever	1	03-Up	265072	91209-612-003
358C	Axle, Left (Case) (09G)	1	03-Up	265076	N.L.
358C	Axle, Left (Case) (09K)	1	05-Up	265076A	N.L.
SEALING RINGS & KITS					
N.I.	Sealing Ring Kit	1	03-Up	265175K	N.L.
FRICTION PLATES					
204B	B1	4	03-Up	265104	N.L.
222B	K3	3	03-Up	265106	N.L.
318C	K1 (.067")	5-6	03-Up	265108	N.L.
318C	K1 (.059")	5	05-Up	265108A	N.L.
514E	B2	6	03-Up	265114	N.L.
522E	K2 (55T) (.067")	3-5	03-Up	265100	N.L.
522E	K2 (60T) (.059")	3-5	03-Up	265100A	N.L.
522E	K2 (60T) (.067")	4	06-Up	265100B	N.L.
STEEL PLATES					
206B	B1	3	03-Up	265124	N.L.
220B	K3	3	03-Up	265126	N.L.
320C	K1	5-6	03-Up	265128	N.L.
516E	B2	5-6	03-Up	265134	N.L.
524E	K2	3-5	03-Up	265120	N.L.
PRESSURE PLATES					
208B	B1	1	03-Up	265144	N.L.
224B	K3	1	03-Up	265146	N.L.
316C	K1	1	03-Up	265148	N.L.
512E	B2	1	03-Up	265154	N.L.
520E	K2	1	03-Up	265140	N.L.

ILL.		Qty.	Year	Part #	Ref. #
FILTERS					
536E	09G (Flat Inlet)	1	03-Up	265010	09G-325-429
536E	09G (Raised Inlet)	1	03-Up	265010A	N.L.
536E	09K	1	05-Up	265010B	N.L.
536E	09M	1	06-up	265010C	N.L.
536E	Mini Cooper	1	06-up	265010D	N.L.
BUSHINGS					
N.I.	Bushing Kit	1	03-Up	265030	N.L.
112A	Pump	1	03-Up	265034	N.L.
118A	Stator	1	03-Up	265036	N.L.
212B	K3 Drum	1	03-Up	265046	N.L.
348C	Case	1	03-Up	265064B	N.L.
428D	Rear Planet (Front)	1	03-Up	265053A	N.L.
432D	Rear Planet (Rear)	1	03-Up	265053B	N.L.
500E	Forward Sun Gear	2	03-Up	265052	N.L.
THRUST WASHERS/BEARINGS					
WASHERS					
N.I.	Thrust Washer Kit	1	03-Up	265200	N.L.
130A	Stator	1	03-Up	265209	N.L.
228B	Front Planet (Front)	1	03-Up	265238A	N.L.
300C	Front Planet (Rear)	1	03-Up	265238B	N.L.
426D	Rear Planet (Front)	1	03-Up	265251A	N.L.
434D	Rear Planet (Rear)	1	03-Up	265251B	N.L.
BEARINGS					
140A	Transfer Gear Bearing	1	03-Up	265279	N.L.
236B	Final Drive Bearing Front (exc Awd)	1	03-Up	265291	N.L.
236B	Final Drive Bearing Front (Awd)	1	03-Up	265291A	N.L.
248B	Final Drive Bearing Rear (exc Awd)	1	03-Up	265289	N.L.
248B	Final Drive Bearing Rear (Awd)	1	03-Up	265289A	N.L.
302C	Front Ring Gear (Front)	1	03-Up	265241A	N.L.
312C	Front Ring Gear (Rear)	1	03-Up	265241B	N.L.
332C	K1 Drum (Rear)	1	03-Up	265231A	N.L.
342C	K2 Drum (Rear)	1	03-Up	265231B	N.L.
404D	Output Drive Bearing	2	03-Up	265281	N.L.
438D	Rear Sun Gear (Front)	1	03-Up	265246A	N.L.
508E	Rear Sun Gear (Rear)	1	03-Up	265246B	N.L.
ELECTRICAL COMPONENTS					
442D	Sensor, Output Speed (OSS)	1	03-Up	265436	N.L.
444D	Sensor, Input Speed (ISS)	1	03-Up	265438	N.L.
446D	Harness w/ Small Connector (09G exc Mini Cooper)	1	03-Up	265445A	N.L.
534E	Harness w/ Large Connector (09G exc Mini Cooper)	1	03-Up	265445B	N.L.
N.I.	Switch, MLPS	1	03-Up	265410	N.L.
N.I.	Solenoid, Shift (On/Off)	2	03-Up	265421A	N.L.
N.I.	Solenoid, PCS (Black Connector w/o Stripe)	1	03-Up	265431	N.L.
N.I.	Solenoid, PCS (Black Connector w/ Stripe)	4	03-Up	265431A	N.L.
N.I.	Solenoid, PCS (Grey Connector w/ Stripe)	1	03-Up	265431E	N.L.
VALVE BODY RECALIBRATION KITS					
N.I.	Shift Kit®, TF60SN (09G) (Transgo®)	1	03-Up	T265165	SK® 09G
PUMPS					
122A	Pump Assembly (w/ Integral Cooler)	1	03-Up	265500	N.L.
PUMP COMPONENTS					
114A	Pump Body	1	03-Up	265510	N.L.
116A	Pump Gears (9T Inner)	1	03-Up	265530	N.L.
120A	Pump Cover	1	03-Up	265520	N.L.

09G, 09M (TF60SN), 09K (TF62SN)

FWD
6 SPEED

ILL.		Qty.	Year	Part #	Ref. #
DRUMS & COMPONENTS					
132A	Piston, B1	1	03-08	265960	N.L.
134A	Return Spring, B1	1	03-08	265970	N.L.
200B	Cushion, B1	1	03-08	265798	N.L.
210B	K3	1	03-Up	265551	N.L.
214B	Piston, K3	1	03-08	265964	N.L.
216B	Return Spring, K3	1	03-08	265975	N.L.
218B	Retainer, K3 (Balance Piston) (Bonded)	1	03-08	265985	N.L.
322C	Retainer, K1 (Balance Piston) (Bonded)	1	03-08	265984	N.L.
324C	Return Spring, K1	1	03-08	265972	N.L.
326C	Piston, K1	1	03-08	265962	N.L.
330C	K1	1	03-Up	265554	N.L.
340C	K2	1	03-Up	265555	N.L.
350C	Return Spring, B2	1	03-08	265977	N.L.
352C	Piston, B2	1	03-08	265965	N.L.
526E	Retainer, K2 (Balance Piston) (Bonded)	1	03-08	265980	N.L.
528E	Return Spring, K2	1	03-08	265967	N.L.
532E	Piston, K2 (Bonded)	1	03-08	265854	N.L.
N.I.	Piston Kit (Bonded)	1	03-08	265960K	N.L.
PLANETS AND COMPONENTS					
230B	Planet, Front (5 Gear)	1	03-Up	265582	N.L.
308C	Ring Gear, Front w/ Shaft	1	03-Up	265592	N.L.
422D	Ring Gear, Rear	1	03-Up	265594	N.L.
430D	Planet, Rear w/ Sun Gear (8 Gear)	1	03-Up	265584	N.L.
SUN GEARS					
226B	Sun Gear, Front (44T)	1	03-Up	265612	N.L.
502E	Sun Gear, Rear (Forward) (30T, 28 Spline)	1	03-Up	265614	N.L.
ONE WAY CLUTCHES					
424D	Low	1	03-Up	265652	N.L.
SHELLS & SUPPORTS					
136A	Shell, B1	1	03-Up	265622	N.L.
336C	Shell, Sun Gear	1	03-Up	265624	N.L.
400D	Support, Drive Gear	1	03-08	265712	N.L.
VALVE BODIES & GOVERNORS					
460D	Valve Body w/ Switches (Case Cooler) (04-06/04)	1	04-E04	265740-1	N.L.
460D	Valve Body w/ Switches (Remote Cooler) (04-06/04)	1	04-E04	265740-2	N.L.
460D	Valve Body No Switches (Case Cooler) (07/04-Up)	1	L04-Up	265740-3	N.L.
460D	Valve Body No Switches (Remote Cooler) (07/04-Up)	1	L04-Up	265740-4	N.L.
DIFFERENTIALS					
246B	2wd (58T Ring Gear)	1	03-Up	265715A	N.L.
246B	Awd	1	03-Up	265715B	N.L.
CASES/HOUSINGS & COMPONENTS					
102A	Bell Housing (w/ Integral Cooler)	1	03-Up	265750	N.L.
356C	Case (w/ Integral Cooler)	1	03-Up	265760	N.L.
540E	Pan (09G) (8 Bolt)	1	03-08	265765	N.L.
540E	Pan (09K) (7 Bolt)	1	03-08	265765B	N.L.
540E	Pan (09M) (9 Bolt)	1	03-08	265765C	N.L.
540E	Pan (Mini-Cooper) (8 Bolt)	1	03-08	265765D	N.L.
MISCELLANEOUS COMPONENTS					
144A	Gear, Transfer w/ Pinion (15T / 48T)	1	03-08	265705	N.L.
408D	Gear, Output (Drive) (53T Outer, 77T Inner)	1	03-08	265548	N.L.
416D	Gear Support Lock	1	03-Up	265713	N.L.
418D	Gear Support Nut	1	03-08	265797	N.L.
TECHNICAL MANUALS					
N.I.	Technical Manual	1	03-Up	265400	N.L.
N.I.	Diagnostic Guide (09G, 09M, TF60-SN)	1	03-Up	265400T	N.L.

AWD
6 SPEED

09D (TR60SN)

ILL.		Qty.	Year	Part #	Ref. #
MASTER OVERHAUL KITS (WITH STEELS)					
N.I.	VW 09D (TR60SN)	1	03-07	235006	N.L.
MASTER OVERHAUL KITS (LESS STEELS)					
N.I.	VW 09D (TR60SN)	1	03-07	235004	N.L.
OVERHAUL KITS (WITH RINGS AND SEALS)					
N.I.	VW 09D (TR60SN)	1	03-07	235002	N.L.
GASKETS & O-RINGS					
N.I.	Pan Gasket	1	03-07	235300	N.L.
FILTERS					
N.I.	Filter	1	03-07	235010	N.L.
VALVE BODY RECALIBRATION KITS					
N.I.	Shift Kit®, 09D (04-07 Touareg, 03-06 Porsche Cayenne) (Transgo®)	1	03-07	235165	SK® 09D
VALVE BODIES & GOVERNORS					
N.I.	Valve Body (w/ Pressure Switches)	1	03-07	235740-1	N.L.
N.I.	Valve Body (w/o Pressure Switches)	1	03-07	235740-2	N.L.
TECHNICAL MANUALS					
N.I.	Tech Manual VW 09D (TR60SN)	1	03-07	235400	N.L.

Notes

ILL.		Qty.	Year	Part #	Ref. #
MASTER OVERHAUL KITS (WITH STEELS)					
N.I.	VW 01J	1	02-Up	275006B	N.L.
MASTER OVERHAUL KITS (LESS STEELS)					
N.I.	VW 01J	1	02-Up	275004B	N.L.
OVERHAUL KITS (WITH RINGS AND SEALS)					
N.I.	VW 01J	1	02-Up	275002B	N.L.
FRICTION PLATES					
N.I.	Friction, Forward	7	02-Up	275108B	N.L.
N.I.	Friction, Reverse	6	02-Up	275110B	N.L.
STEEL PLATES					
N.I.	Steel, Forward	7	02-Up	275128B	N.L.
N.I.	Steel, Reverse	6	02-Up	275130B	N.L.
FILTERS					
N.I.	Filter, 01J (Deep)	1	02-Up	275010B	N.L.
N.I.	Filter 01J (Shallow)	1	02-Up	27510BA	N.L.
MISCELLANEOUS COMPONENTS					
N.I.	Filter Tube	1	02-Up	275495B	N.L.
TECHNICAL MANUALS					
N.I.	Tech Manual 01J	1	02-Up	27500BT	N.L.

Notes

SEAL AFTERMARKET PRODUCTS
your source for engineered solutions

PRODUCT ANNOUNCEMENT

Piston Kit 09G (TF-60SN) 2003-Up

Seal Aftermarket Products now has the complete Piston Kit for the 09G covering 2003-Up.
Please call your Sales Representative for pricing & kit availability.

265985
Piston 09G (TF-60SN) K3 Clutch Balance 2003-Up

265854
Piston 09G (TF-60SN) K2 Clutch Apply 2003-Up



265984
Piston 09G (TF-60SN) K1 Clutch Balance 2003-Up

265980
Piston 09G (TF-60SN) K2 Clutch Balance 2003-Up

265960K
Piston Kit 09G (TF-60SN) 2003-Up [4 Pistons]



B000011

Rebuild Kits Available

265002P - Overhaul Kit 09G (TF-60SN) 2003-Up With Pistons
265004P - Master L/Steels Kit 09G (TF-60SN) 2003-Up With Pistons
265006P - Master W/Steels Kit 09G (TF-60SN) 2003-Up With Pistons

Release Date 2/13/2014

Sales Policy: All shipments are FCA Pembroke Park. Price and Availability subject to change
© 2014 Seal Aftermarket Products LLC. ALL RIGHTS RESERVED. Possession of price list does not constitute offer to sell
Disclaimer - All information has been checked for accuracy, however no liability can be assumed for errors and omissions

Seal Aftermarket Products LLC · 2315 SW 32nd Avenue · Pembroke Park FL 33023 · [P] (800) 582-2760 · [F] 954-364-2401 · www.sealaftermarketproducts.com

ILL.		Qty.	Year	Part #	Ref. #
MASTER OVERHAUL KITS (WITH STEELS)					
N.I.	02E (DCT)	1	03-Up	865006	N.L.
MASTER OVERHAUL KITS (LESS STEELS)					
N.I.	02E (DCT)	1	03-Up	865004	N.L.
OVERHAUL KITS (WITH RINGS AND SEALS)					
N.I.	02E (DCT)	1	03-Up	865002	N.L.
BONDED PISTONS					
N.I.	Piston, K2 (Small Clutch) (Bonded)	1	03-Up	865960	N.L.
N.I.	Retainer, K2 (Small Clutch) (Bonded)	1	03-Up	865980	N.L.
GASKETS & O-RINGS					
N.I.	Gasket, Valve Body Cover	1	03-Up	865301	02E-321-371E
METAL CLAD SEALS					
N.I.	Front (Front Cover) (Bonded)	1	03-Up	865070	02E-301-205B
N.I.	Axle (Right) (Bell)	1	03-Up	865076	02T-409-189C
N.I.	Axle (Left) (Case)	1	03-Up	865077	02M-301-189B
SEALING RINGS & KITS					
N.I.	Sealing Ring Kit	1	03-Up	865175K	N.L.
FRICTION PLATES					
N.I.	K2 (2-4-6 Input) (Small)	5	03-Up	865100	N.L.
N.I.	K1 (1-3-5 Input) (Large)	4	03-Up	865102	N.L.
N.I.	Synchronizer, 1st (Inner)	1	03-Up	865701A	N.L.
N.I.	Synchronizer, 1st (Center)	1	03-Up	865701B	N.L.
N.I.	Synchronizer, 1st (Outer)	1	03-Up	865701C	N.L.
N.I.	Synchronizer, 2nd (Inner)	1	03-Up	865702A	N.L.
N.I.	Synchronizer, 2nd (Center)	1	03-Up	865702B	N.L.
N.I.	Synchronizer, 2nd (Outer)	1	03-Up	865702C	N.L.
N.I.	Synchronizer, 3rd	1	03-Up	865703	N.L.
N.I.	Synchronizer, 4th	1	03-Up	865704	N.L.
N.I.	Synchronizer, 5th	1	03-Up	865705	N.L.
N.I.	Synchronizer, 6th	1	03-Up	865706	N.L.
N.I.	Synchronizer (Reverse) (Inner)	1	03-Up	865709A	N.L.
N.I.	Synchronizer (Reverse) (Center)	1	03-Up	865709B	N.L.
N.I.	Synchronizer (Reverse) (Outer)	1	03-Up	865709C	N.L.
STEEL PLATES					
N.I.	K2 (2-4-6 Input) (Small)	6	03-Up	865120	N.L.
N.I.	K1 (1-3-5 Input) (Large)	5	03-Up	865122	N.L.
PRESSURE PLATES					
N.I.	K2 (2-4-6 Input) (Small)	1	03-Up	865140	N.L.
N.I.	K1 (1-3-5 Input) (Large)	1	03-Up	865142	N.L.
FILTERS					
N.I.	Filter, Main	1	03-Up	865010	02E-325-429D
N.I.	Filter, Cooler Return	1	03-Up	865013	02E-305-051C
THRUST WASHERS/BEARINGS					
WASHERS					
N.I.	Hub to Drum	1	03-Up	865232	N.L.
N.I.	Input Shim	1	03-Up	865249	N.L.
ELECTRICAL COMPONENTS					
N.I.	Solenoid (Open Coil)	1	03-Up	865428	N.L.
N.I.	Solenoid (3 Bolt Holes)	4	03-Up	865430	N.L.
N.I.	Solenoid (Linear)	2	03-Up	865432	N.L.
N.I.	Solenoid (45 Degree Bracket)	2	03-Up	865435	N.L.
N.I.	Sensor, Input Speed (ISS)	1	03-Up	865438	N.L.
N.I.	Solenoid (90 Degree Bracket)	2	03-Up	865439	N.L.

ILL.		Qty.	Year	Part #	Ref. #
ELECTRICAL COMPONENTS (Cont.)					
N.I.	Case Connector Plate w/ TCM & Sensors	1	03-Up	865444	N.L.
N.I.	Case Connector Plate w/ Solenoids	1	03-Up	865446	N.L.
PUMPS					
N.I.	Pump Assembly	1	03-Up	865500	N.L.
DRUMS & COMPONENTS					
N.I.	Drum, Dual Clutch	1	03-Up	865550	N.L.
N.I.	Hub, Input Flange	1	03-Up	865574	N.L.
N.I.	Hub, Small Clutch	1	03-Up	865576	N.L.
N.I.	Hub, Large Clutch	1	03-Up	865577	N.L.
N.I.	Piston, K2 (Small Clutch) (Bonded)	1	03-Up	865960	N.L.
N.I.	Return Spring (Small Clutch)	1	03-Up	865976	N.L.
N.I.	Balance Piston, K2 (Small Clutch) (Bonded)	1	03-Up	865980	N.L.
SHAFTS					
N.I.	Input (Hollow)	1	03-Up	865670A	N.L.
N.I.	Input (Solid)	1	03-Up	865670B	N.L.
N.I.	Lower Pinion	1	03-Up	865730-1	N.L.
N.I.	Upper Pinion	1	03-Up	865730-2	N.L.
N.I.	Pump	1	03-Up	865671	N.L.
VALVE BODIES & GOVERNORS					
N.I.	Valve Body	1	03-Up	865740	N.L.
DIFFERENTIALS					
N.I.	Differential	1	03-Up	865715	N.L.
CASES/HOUSINGS & COMPONENTS					
N.I.	Bell Housing	1	03-Up	865750	N.L.
N.I.	Case	1	03-Up	865760	N.L.
N.I.	Cover, Valve Body	1	03-Up	865766	N.L.
N.I.	Cover, End (Bonded)	1	03-Up	865759	02E-315-141A
MISCELLANEOUS COMPONENTS					
N.I.	Gear, 1st Driven	1	03-Up	865581	N.L.
N.I.	Gear, 2nd Driven	1	03-Up	865582	N.L.
N.I.	Gear, 3rd Driven	1	03-Up	865583A	N.L.
N.I.	Gear, 3rd Drive	1	03-Up	865583B	N.L.
N.I.	Gear, 4th Driven	1	03-Up	865584	N.L.
N.I.	Gear, 5th Driven	1	03-Up	865585A	N.L.
N.I.	Gear, 5th Drive	1	03-Up	865585B	N.L.
N.I.	Gear, 6th Driven	1	03-Up	865586	N.L.
N.I.	Gear, Reverse Driven	1	03-Up	865587	N.L.
N.I.	Synchronizer Kit, 1-3	1	03-Up	865701K	N.L.
N.I.	Synchronizer Kit, 2-4	1	03-Up	865703K	N.L.
N.I.	Synchronizer Kit, 5th	1	03-Up	865705K	N.L.
N.I.	Synchronizer Kit, Rev-6	1	03-Up	865709K	N.L.
N.I.	Gear, Reverse Idler	1	03-Up	865819	N.L.
N.I.	Fork, 1-3	1	03-Up	865841	N.L.
N.I.	Fork, 2-4	1	03-Up	865842	N.L.
N.I.	Fork, 5th	1	03-Up	865844	N.L.
N.I.	Fork, Rev-6	1	03-Up	865845	N.L.
N.I.	Cooler	1	03-Up	865998	N.L.
N.I.	Standpipe, Fluid Level	1	03-Up	865999	N.L.
TECHNICAL MANUALS					
N.I.	Diagnostic Guide	1	03-Up	865400T	N.L.

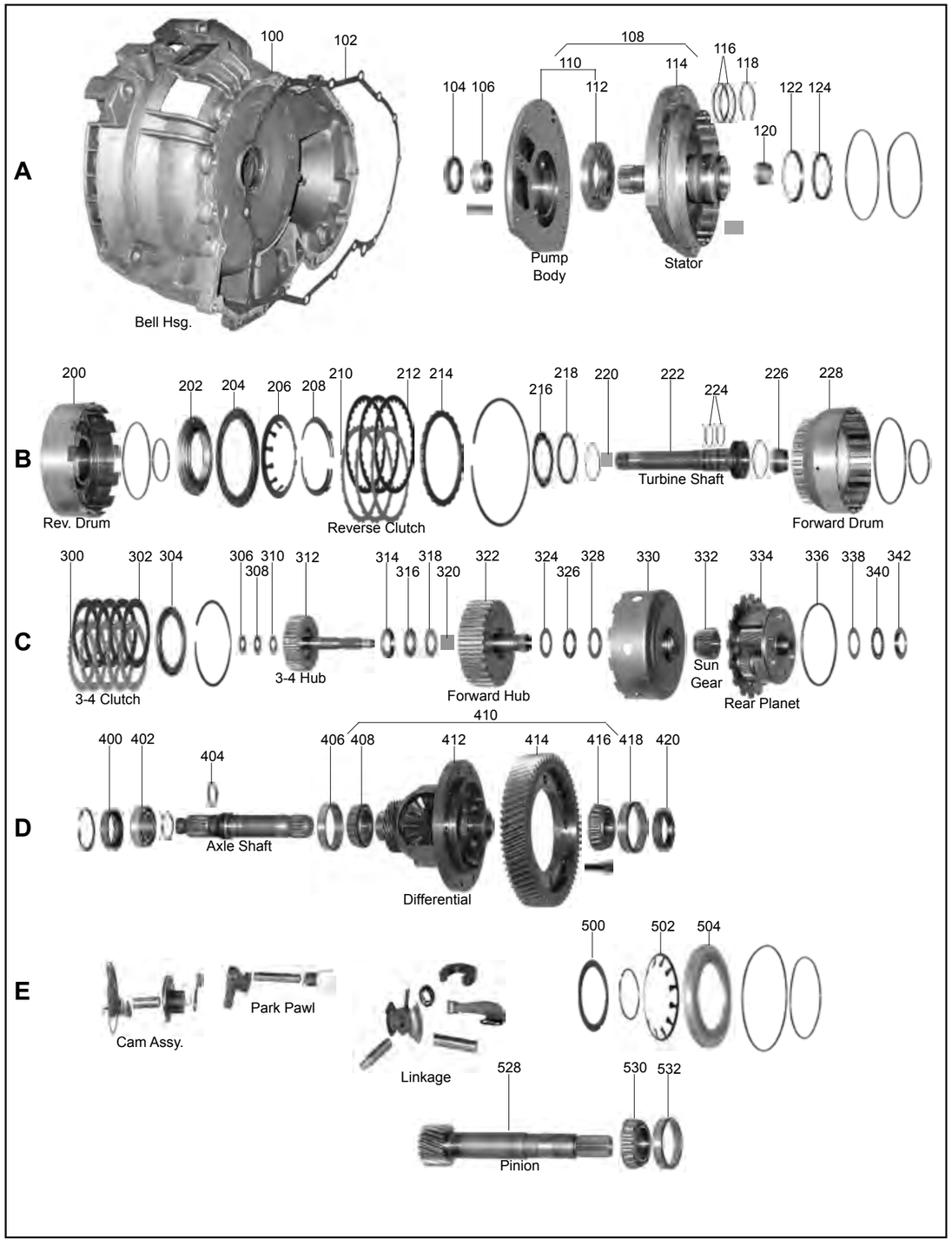
A
100
102
Bell Hsg.
104 106
108
110
112
114
116
118
120
122 124
Pump Body
Stator
B
200
202 204 206 208 210 212 214
216 218 220 222 224 226 228
Rev. Drum
Reverse Clutch
Turbine Shaft
Forward Drum
C
300 302 304 306 308 310 312 314 316 318 320 322 324 326 328 330 332 334 336 338 340 342
3-4 Clutch
3-4 Hub
Forward Hub
Sun Gear
Rear Planet
D
400 402 404 406 408 410 412 414 416 418 420
Axle Shaft
Differential
E
Cam Assy.
Park Pawl
Linkage
500 502 504
528
530 532
Pinion

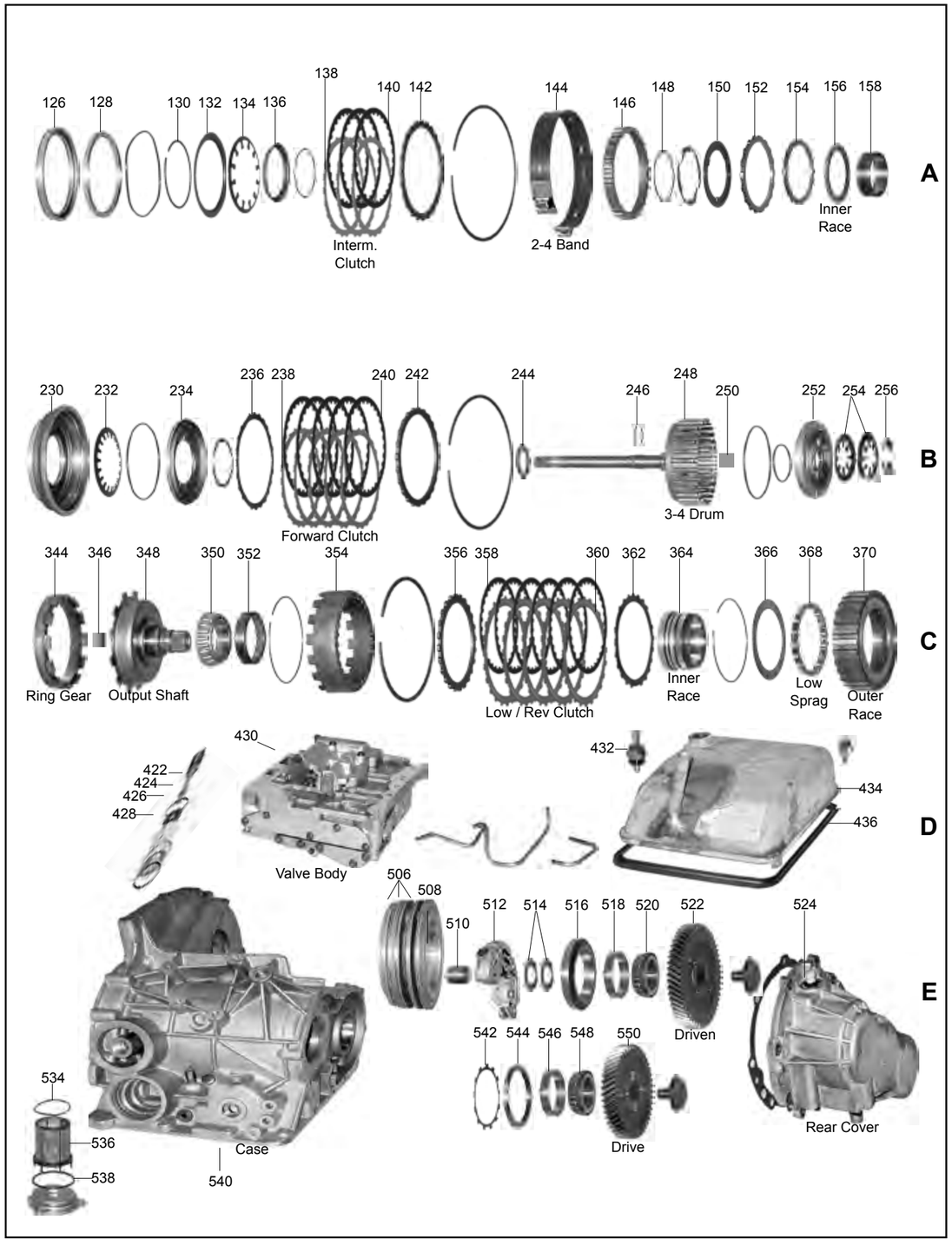
A
126 128 130 132 134 136 138 140 142 144 146 148 150 152 154 156 158
Interm. Clutch
2-4 Band
Inner Race
B
230 232 234 236 238 240 242 244 246 248 250 252 254 256
Forward Clutch
3-4 Drum
C
344 346 348 350 352 354 356 358 360 362 364 366 368 370
Ring Gear
Output Shaft
Low / Rev Clutch
Inner Race
Low Sprag
Outer Race
D
422 424 426 428 430 432 434 436
Valve Body
E
506 508 510 512 514 516 518 520 522 524
534 536 538 540
Case
542 544 546 548 550
Driven
Drive
Rear Cover

ILL.		Qty.	Year	Part #	Ref. #
MASTER OVERHAUL KITS (WITH STEELS)					
N.I.	ZF4HP14 (Peugeot)	1	86-94	79006P	N.L.
N.I.	ZF4HP18FL (Eagle Premier, Dodge Monaco)	1	88-98	79006E	N.L.
N.I.	ZF4HP18FLA / FLE (Audi, Porsche)	1	91-97	79006A	N.L.
N.I.	ZF4HP18Q (Saab)	1	86-98	79006S	N.L.
MASTER OVERHAUL KITS (LESS STEELS)					
N.I.	ZF4HP14 (Peugeot)	1	86-94	79004P	N.L.
N.I.	ZF4HP18FL (Eagle Premier, Dodge Monaco)	1	88-98	79004E	N.L.
N.I.	ZF4HP18FLA / FLE (Audi, Porsche)	1	91-97	79004A	N.L.
N.I.	ZF4HP18Q (Saab)	1	86-98	79004S	N.L.
OVERHAUL KITS (WITH RINGS AND SEALS)					
N.I.	ZF4HP14 (Peugeot)	1	86-94	79002P	N.L.
N.I.	ZF4HP18FL (Eagle Premier, Dodge Monaco)	1	88-98	79002E	N.L.
N.I.	ZF4HP18FLA / FLE (Audi, Porsche)	1	91-97	79002A	N.L.
N.I.	ZF4HP18Q (Saab)	1	86-98	79002S	N.L.
GASKETS & O-RINGS					
436D	Gasket, Bottom Pan (ZF4HP14)	1	86-94	79300P	1036-301-182
436D	Gasket, Bottom Pan (Rubber) (ZF4HP18)	1	86-98	79300E	1050-301-036
METAL CLAD SEALS					
104A	Front	1	86-98	79070E	0750-111-079
FRICTION PLATES					
140A	C Pack (Intermediate) (ZF4HP14)	2-3	86-94	79104P	1036-202-018
140A	C Pack (Intermediate) (ZF4HP18)	3-4	88-98	69104	1043-217-009
212B	B Pack (Reverse) (ZF4HP14)	3	86-94	79110P	1036-202-028
212B	B Pack (Reverse) (ZF4HP18)	3	86-98	79110E	1056-272-024
240B	A Pack (Forward) (ZF4HP14)	3-4	86-94	79104P	1036-202-018
240B	A Pack (Forward) (ZF4HP18)	4-5	86-98	79108E	1050-202-002
302C	E Pack (3-4 Clutch) (ZF4HP14)	5	86-94	79100P	1036-230-034
302C	E Pack (3-4 Clutch) (ZF4HP18)	4-5	86-98	79100E	1050-230-033
358C	D Pack (Low/ Reverse) (ZF4HP14)	4-5	86-94	79104P	1036-202-018
358C	D Pack (Low/ Reverse) (ZF4HP18)	6	86-98	79108E	1050-202-002
STEEL PLATES					
138A	C Pack (Intermediate) (ZF4HP14)	1-3	86-94	79124P	1036-302-015
138A	C Pack (Intermediate) (ZF4HP18)	3-4	86-98	69126B	24231-205-935
210B	B Pack (Reverse) (ZF4HP14)	3	86-94	79124P	1036-302-015
210B	B Pack (Reverse) (ZF4HP18)	3	86-98	69128E	1050-302-011
238B	A Pack (Forward) (ZF4HP14)	3-5	86-94	79124P	1036-302-015
238B	A Pack (Forward) (ZF4HP18)	4-5	86-98	69128E	1050-302-011
238B	A Pack (Forward) (ZF4HP18) (Waved)	2	86-98	69129E	1050-302-012
300C	E Pack (3-4 Clutch) (ZF4HP14)	4-5	86-94	79120P	1036-330-036
300C	E Pack (3-4 Clutch) (ZF4HP18)	4-5	86-98	79120E	1050-330-017
360C	D Pack (Low/ Reverse) (ZF4HP14)	5	86-94	79134P	1036-317-006
360C	D Pack (Low/ Reverse) (ZF4HP18)	6	86-98	69128E	1050-302-011
FILTERS					
536E	ZF4HP14	1	86-94	79010E	83504685
536E	ZF4HP18FL	1	88-98	79010E	83504685
536E	ZF4HP18FLA / FLE	1	91-97	79010A	01F-325-433
536E	ZF4HP18Q	1	86-98	79010S	0501-311-497
BANDS					
144A	ZF4HP14	1	86-94	79020P	0501-208-833
144A	ZF4HP18FL	1	88-98	79020E	0501-208-881
144A	ZF4HP18FLA / FLE	1	91-97	79020A	N.L.
144A	ZF4HP18Q	1	86-98	79020E	0501-208-881
BUSHINGS					
N.I.	Bushing Kit (ZF4HP14)	1	88-98	79030E	N.L.
N.I.	Bushing Kit (ZF4HP18Q)	1	86-94	79030S	N.L.
106A	Pump Body (ZF4HP18FL)	1	88-98	79034E	N.L.
106A	Pump Body (ZF4HP18Q)	1	86-94	79034S	N.L.

ILL.		Qty.	Year	Part #	Ref. #
BUSHINGS (Cont.)					
120A	Stator (Rear) (ZF4HP14)	1	86-94	79037P	N.L.
120A	Stator (Rear) (ZF4HP18)	1	88-98	69048	N.L.
220B	Stator Shaft (Front) (ZF4HP18)	1	88-98	79049E	N.L.
226B	Turbine Shaft (Rear) (ZF4HP18)	1	88-98	79049G	N.L.
ELECTRICAL COMPONENTS					
N.I.	Switch, Neutral (ZF4HP18FL)	1	88-98	79410	0501-310-648
N.I.	Solenoid, Shift (ZF4HP18FLA / FLE)	3	88-98	179421	0750-132-105
N.I.	Speed Sensor (ZF4HP18FL)	1	88-98	79436	0501-206-934
ONE WAY CLUTCHES					
146A	Sprag Assembly, Intermediate w/ Races (ZF4HP18)	1	88-98	79642E	1050-231-026
368C	Sprag, Rear (ZF4HP14)	1	86-94	79654P	0501-207-060
368C	Sprag, Rear (ZF4HP18FL)	1	88-98	79654E	0501-207-061
MISCELLANEOUS COMPONENTS					
N.I.	Detent Cable Repair Kit (ZF4HP18)	1	86-98	57451	N.L.
TECHNICAL MANUALS					
N.I.	Tech Manual, Eagle (ZF4HP18FL)	1	88-98	79400E	N.L.
N.I.	Tech Manual, Saab (ZF4HP18Q)	1	86-98	79400S	N.L.

Notes

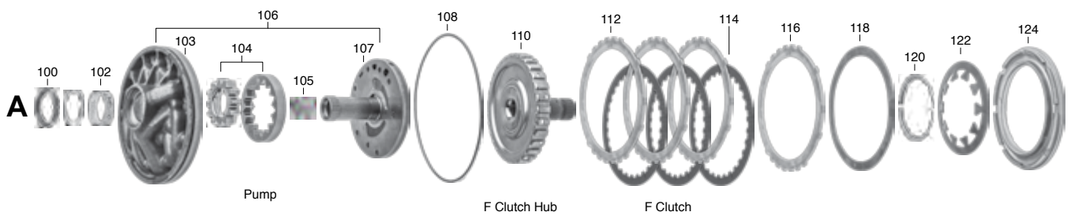
A
100
102
103
104
105
106
107
108
110
112
114
116
118
120
122
124
Pump
F Clutch Hub
F Clutch

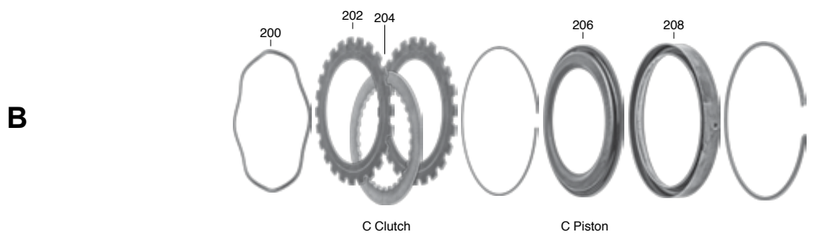
B
200
202
204
206
208
C Clutch
C Piston

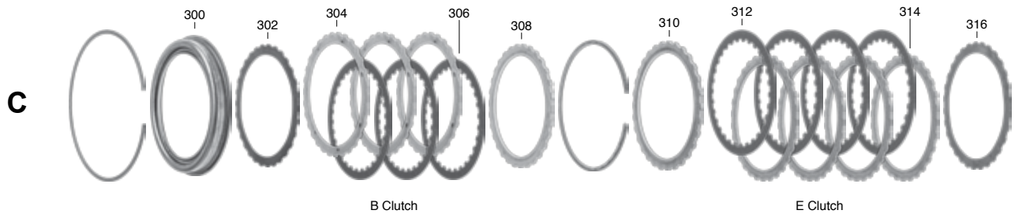
C
300
302
304
306
308
310
312
314
316
B Clutch
E Clutch

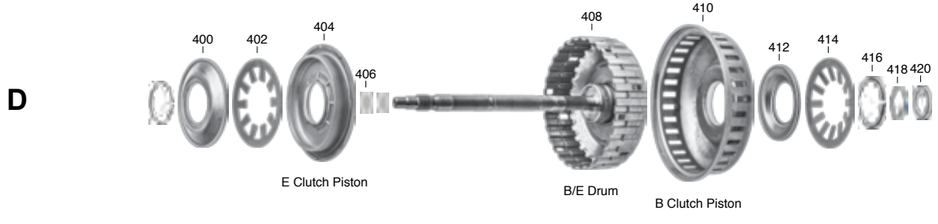
D
400
402
404
406
408
410
412
414
416
418
420
E Clutch Piston
B/E Drum
B Clutch Piston

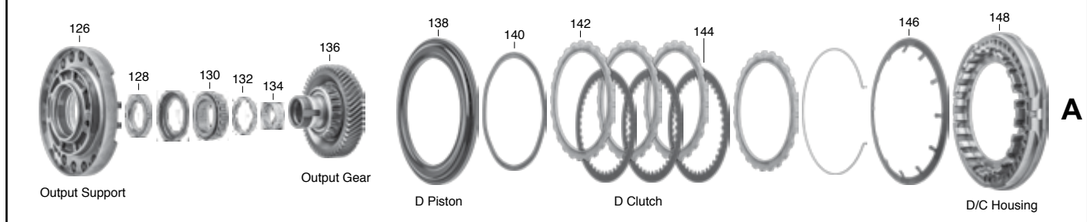
A
126
128
130
132
134
136
138
140
142
144
146
148
Output Support
Output Gear
D Piston
D Clutch
D/C Housing

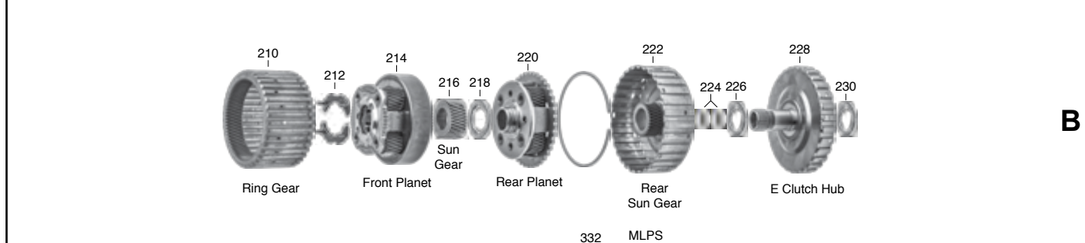
B
210
212
214
216
218
220
222
224
226
228
230
Ring Gear
Front Planet
Sun Gear
Rear Planet
Rear Sun Gear
E Clutch Hub

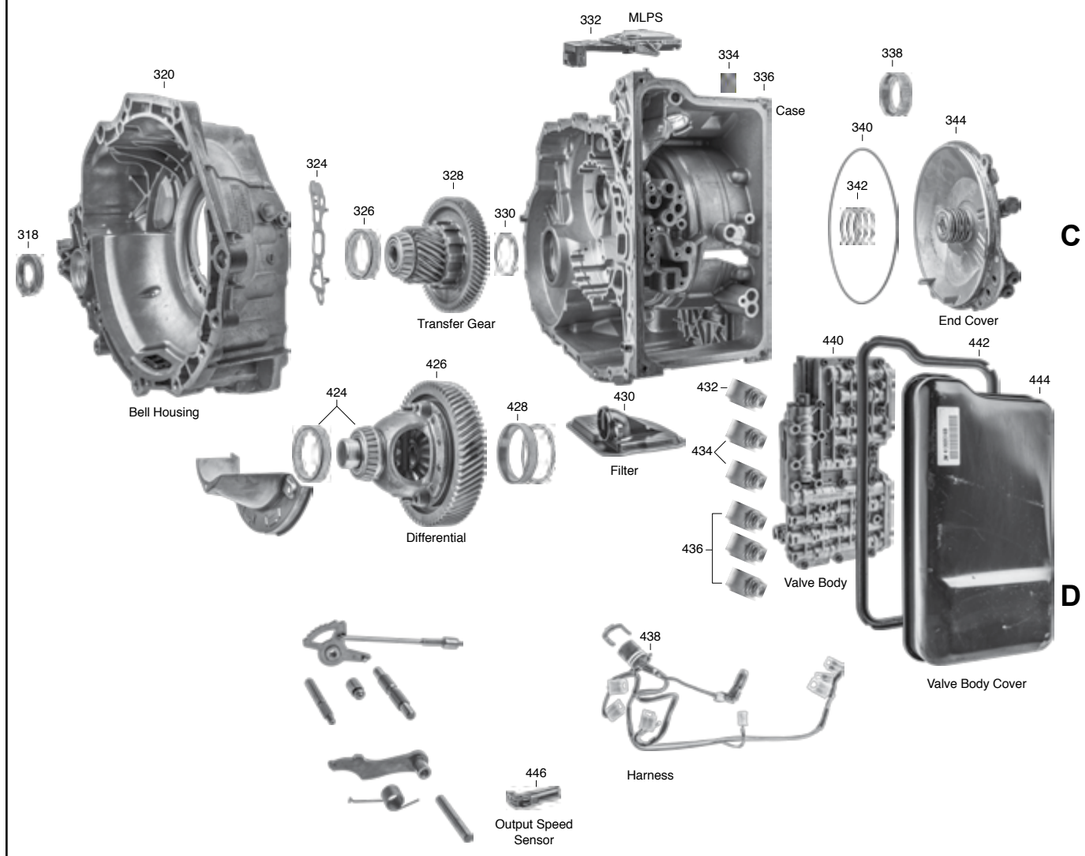
C
318
320
324
326
328
330
332
MLPS
334
336
Case
338
340
342
344
Bell Housing
Transfer Gear
End Cover
426
424
428
430
432
434
436
440
442
444
Differential
Filter
Valve Body
Valve Body Cover
D
438
Harness
446
Output Speed Sensor

ILL.		Qty.	Year	Part #	Ref. #
MASTER OVERHAUL KITS (WITH STEELS)					
N.I.	4HP16	1	02-Up	145006	N.L.
MASTER OVERHAUL KITS (LESS STEELS)					
N.I.	4HP16	1	02-Up	145004	N.L.
OVERHAUL KITS (WITH RINGS AND SEALS)					
N.I.	4HP16	1	02-Up	145002	N.L.
BONDED PISTONS					
N.I.	Piston Kit	1	02-Up	145960K	N.L.
138A	Piston, D Clutch (Bonded)	1	02-Up	145966	N.L.
206B	Piston, C Clutch (Bonded)	1	02-Up	145962	N.L.
GASKETS & O-RINGS					
108A	O-Ring, Pump	1	02-Up	145311	N.L.
324C	Gasket, Bell Housing (Small)	1	02-Up	145326	N.L.
340C	O-Ring, End Cover	1	02-Up	145305	N.L.
442D	Gasket, Valve Body Cover	1	02-Up	145300	N.L.
N.I.	Gasket, Bell Housing (Large)	1	02-Up	145325	N.L.
N.I.	Gasket, Valve Body	1	02-Up	145320	N.L.
METAL CLAD SEALS					
100A	Pump	1	02-Up	145070	N.L.
318C	Axle, Bell Housing	1	02-Up	145076	N.L.
334C	Manual	1	02-Up	145072	N.L.
338C	Axle, Case	1	02-Up	145077	N.L.
SEALING RINGS & KITS					
342C	End Cover	3	02-Up	145178	N.L.
406D	Input	1	02-Up	145176	N.L.
FRICTION PLATES					
114A	F Clutch	3	02-Up	145108	N.L.
144A	D Clutch	3	02-Up	145110	N.L.
202B	C Clutch	2	02-Up	145106	N.L.
306C	B Clutch	3	02-Up	145100	N.L.
312C	E Clutch	4	02-Up	145100	N.L.
STEEL PLATES					
112A	F Clutch	3	02-Up	145128	N.L.
142A	D Clutch	4	02-Up	145130	N.L.
204B	C Clutch	1	02-Up	145126	N.L.
304C	B Clutch (.080)	1	02-Up	145120	N.L.
304C	B Clutch (.097)	2	02-Up	145120A	N.L.
314C	E Clutch (.070)	1	02-Up	145120C	N.L.
314C	E Clutch (.080)	3	02-Up	145120D	N.L.
PRESSURE PLATES					
116A	F Clutch	1	02-Up	145148	N.L.
308C	B Clutch	1	02-Up	145140	N.L.
310C	E Clutch	1	02-Up	145140	N.L.
FILTERS					
430D	4HP16	1	02-Up	145010	N.L.
BUSHINGS					
102A	Pump Body	1	02-Up	145034	N.L.
105A	Pump Cover	1	02-Up	145036	N.L.
134A	Output Gear	1	02-Up	145062	N.L.
224B	E Clutch Hub	2	02-Up	145039	N.L.

ILL.		Qty.	Year	Part #	Ref. #
THRUST WASHERS/BEARINGS					
BEARINGS					
130A	Bearing, Output Gear (Front) (Small)	1	02-Up	145279	N.L.
130A	Race, Output Gear (Front) (Small)	1	02-Up	145279	N.L.
132A	Spacer, Selective	AR	02-Up	145276	N.L.
216B	Bearing, Sun Gear	1	02-Up	145240	N.L.
226B	Bearing, E Clutch Hub (Front/Rear)	2	02-Up	145235	N.L.
418D	Race, End Cover	1	02-Up	145264	N.L.
420D	Bearing, End Cover	1	02-Up	145263	N.L.
N.I.	Bearing, Output Gear (Rear) (Large)	1	02-Up	145280	N.L.
N.I.	Race, Output Gear (Rear) (Large)	1	02-Up	145280	N.L.
ELECTRICAL COMPONENTS					
332C	Switch, MLPS	1	02-Up	145410	N.L.
432D	Solenoid, EPC (1063227002)	1	02-Up	145431	N.L.
434D	Solenoid, PWM (1063327094)	2	02-Up	145421	N.L.
436D	Solenoid, PWM (1063227001)	3	02-Up	145425	N.L.
438D	Harness, with connector	1	02-Up	145446	N.L.
446D	Sensor, Output Speed	1	02-Up	145426	N.L.
N.I.	Sensor, Input Speed	1	02-Up	145428	N.L.
PUMPS					
106A	Pump	1	02-Up	145500	N.L.
PUMP COMPONENTS					
103A	Pump Body	1	02-Up	145510	N.L.
104A	Pump Gears	1	02-Up	145530	N.L.
107A	Pump Cover	1	02-Up	145520	N.L.
DRUMS & COMPONENTS					
110A	Hub, F Clutch	1	02-Up	145574	N.L.
118A	Cushion, F Clutch	1	02-Up	145129	N.L.
120A	Retainer, F Clutch (Split Rings)	2	02-Up	145934	N.L.
122A	Return Spring, F Clutch	1	02-Up	145974	N.L.
124A	Piston, F Clutch	1	02-Up	145964	N.L.
138A	Piston, D Clutch (Bonded)	1	02-Up	145962	N.L.
140A	Cushion, D Clutch	1	02-Up	145127	N.L.
146A	Return Spring, D Clutch	1	02-Up	145972	N.L.
200B	Return Spring, C Clutch	1	02-Up	145970	N.L.
206B	Piston, C Clutch (Bonded)	1	02-Up	145960	N.L.
228B	Hub, E Clutch	1	02-Up	145575	N.L.
302C	Cushion, B Clutch	1	02-Up	145125	N.L.
400D	Retainer, E Clutch	1	02-Up	145985	N.L.
402D	Return Spring, E Clutch	1	02-Up	145975	N.L.
404D	Piston, E Clutch	1	02-Up	145965	N.L.
408D	Drum, B/E Clutch	1	02-Up	145555	N.L.
410D	Piston, B Clutch	1	02-Up	145967	N.L.
412D	Retainer, B Clutch	1	02-Up	145987	N.L.
414D	Return Spring, B Clutch	1	02-Up	145977	N.L.
PLANETS AND COMPONENTS					
210B	Ring Gear, Output	1	02-Up	145592	N.L.
214B	Planet, Front	1	02-Up	145582	N.L.
220B	Planet, Rear	1	02-Up	145584	N.L.
SUN GEARS					
216B	Front	1	02-Up	145612	N.L.
222B	Rear w/Hub	1	02-Up	145614	N.L.
SHELLS & SUPPORTS					
126A	Support, Output Gear	1	02-Up	145631	N.L.
148A	Support, D/C Clutch	1	02-Up	145633	N.L.
208B	Support, C Clutch Piston	1	02-Up	145635	N.L.
VALVE BODIES & GOVERNORS					
440D	Valve Body	1	02-Up	145740	N.L.

ILL.		Qty.	Year	Part #	Ref. #
DIFFERENTIALS					
426D	Final Drive	1	02-Up	145715	N.L.
CASES/HOUSINGS & COMPONENTS					
320C	Bell Housing	1	02-Up	145750	N.L.
336C	Case	1	02-Up	145760	N.L.
MISCELLANEOUS COMPONENTS					
128A	Nut Lock	1	02-Up	145795	N.L.
136A	Output Gear	1	02-Up	145710	N.L.
212B	Lube Dam (Front Planet)	2	02-Up	145798	N.L.
328C	Transfer Gear w/pinion	1	02-Up	145712	N.L.
344C	Cover, End	1	02-Up	145769	N.L.
444D	Cover, Valve Body	1	02-Up	145766	N.L.

Notes

TK TOLEDO TRANS-KIT

SEAL AFTERMARKET PRODUCTS
your source for engineered solutions

BRYCO

ProSELECT

RoadMaster

PRODUCT ANNOUNCEMENT

ZF6HP19 / ZF6HP21X 2004-Up

Seal Aftermarket Products now has the Overhaul Kit for the ZF6HP19 / ZF6HP21X series covering 2004-Up.
Please call your Sales Representative for pricing and availability

Innovative Engineered Solutions

• Complete Sealing Ring Solution



Vehicle Coverage

BMW
► 1 Series 2004-07 [I4 1.4L - 2.0L]
► 3 Series 2004-Up [I4 2.0L - 3.0L]
► 5 Series 2004-Up [I4/I6 2.0L - 3.0L]

Hyundai
► Genesis Coupe 2009-Up [V6]

Jaguar
► S Type 2004-05[V6]

Rebuild Kits

Available Now
T209002A - Overhaul Kit ZF6HP19 / ZF6HP21/X 2004-Up

Available with 5 day lead-time
T209004A - Master L/ Steels Kit ZF6HP19 / ZF6HP21/X 2004-Up



Release Date 9/5/2014

Sales Policy: All shipments are FCA Pembroke Park. Price and Availability subject to change

B00022

© 2014 Seal Aftermarket Products LLC. ALL RIGHTS RESERVED. Possession of price list does not constitute offer to sell
Disclaimer - All information has been checked for accuracy, however no liability can be assumed for errors and omissions

Seal Aftermarket Products LLC · 2315 SW 32nd Avenue · Pembroke Park FL 33023 · [P] (800) 582-2760 · [F] 954-364-2401 · www.sealaftermarketproducts.com

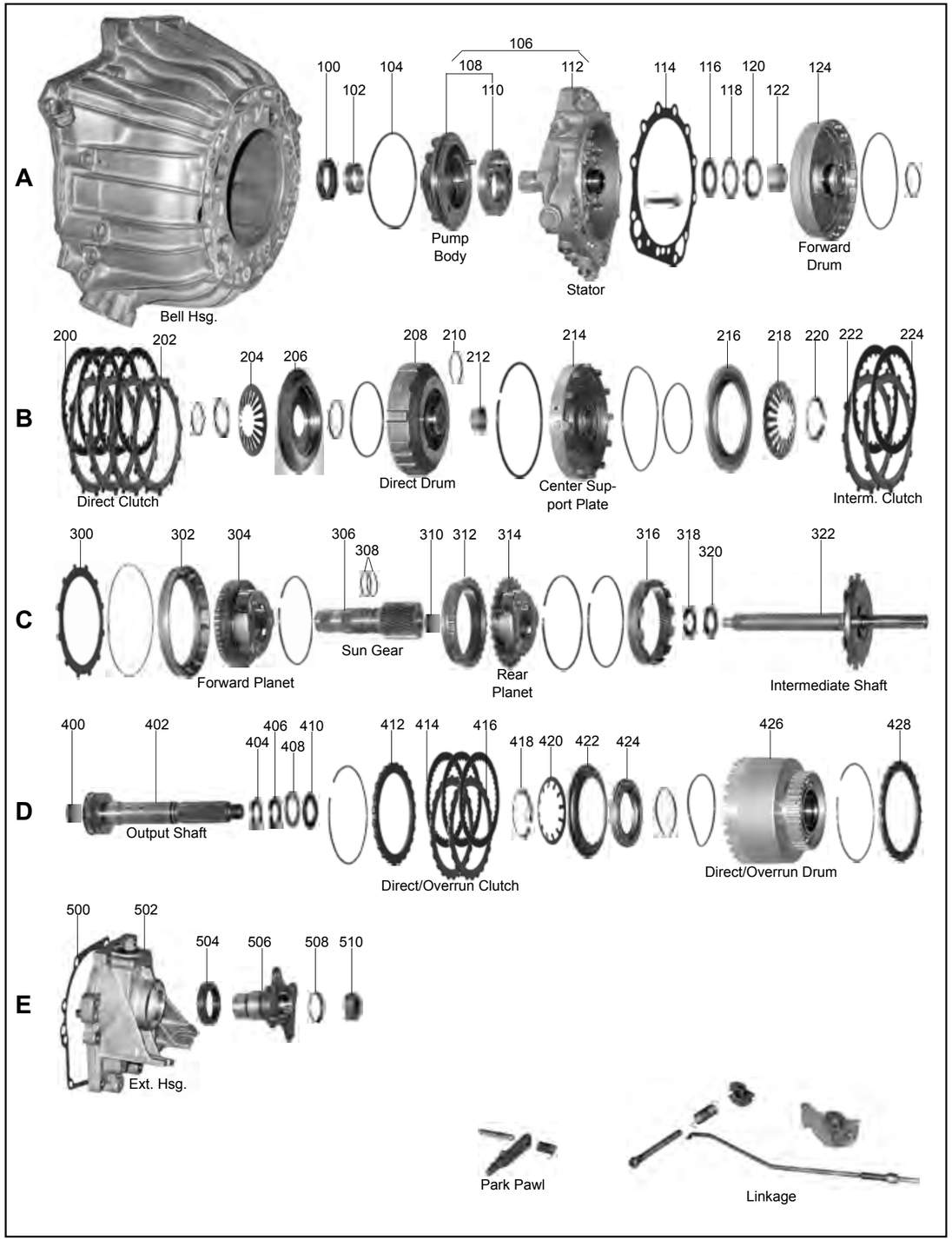
A
100
102
104
106
108
110
112
114
116
118
120
122
124
Bell Hsg.
Pump Body
Stator
Forward Drum
B
200
202
204
206
208
210
212
214
216
218
220
222
224
Direct Clutch
Direct Drum
Center Support Plate
Interm. Clutch
C
300
302
304
306
308
310
312
314
316
318
320
322
Forward Planet
Sun Gear
Rear Planet
Intermediate Shaft
D
400
402
404
406
408
410
412
414
416
418
420
422
424
426
428
Output Shaft
Direct/Overrun Clutch
Direct/Overrun Drum
E
500
502
504
506
508
510
Ext. Hsg.
Park Pawl
Linkage

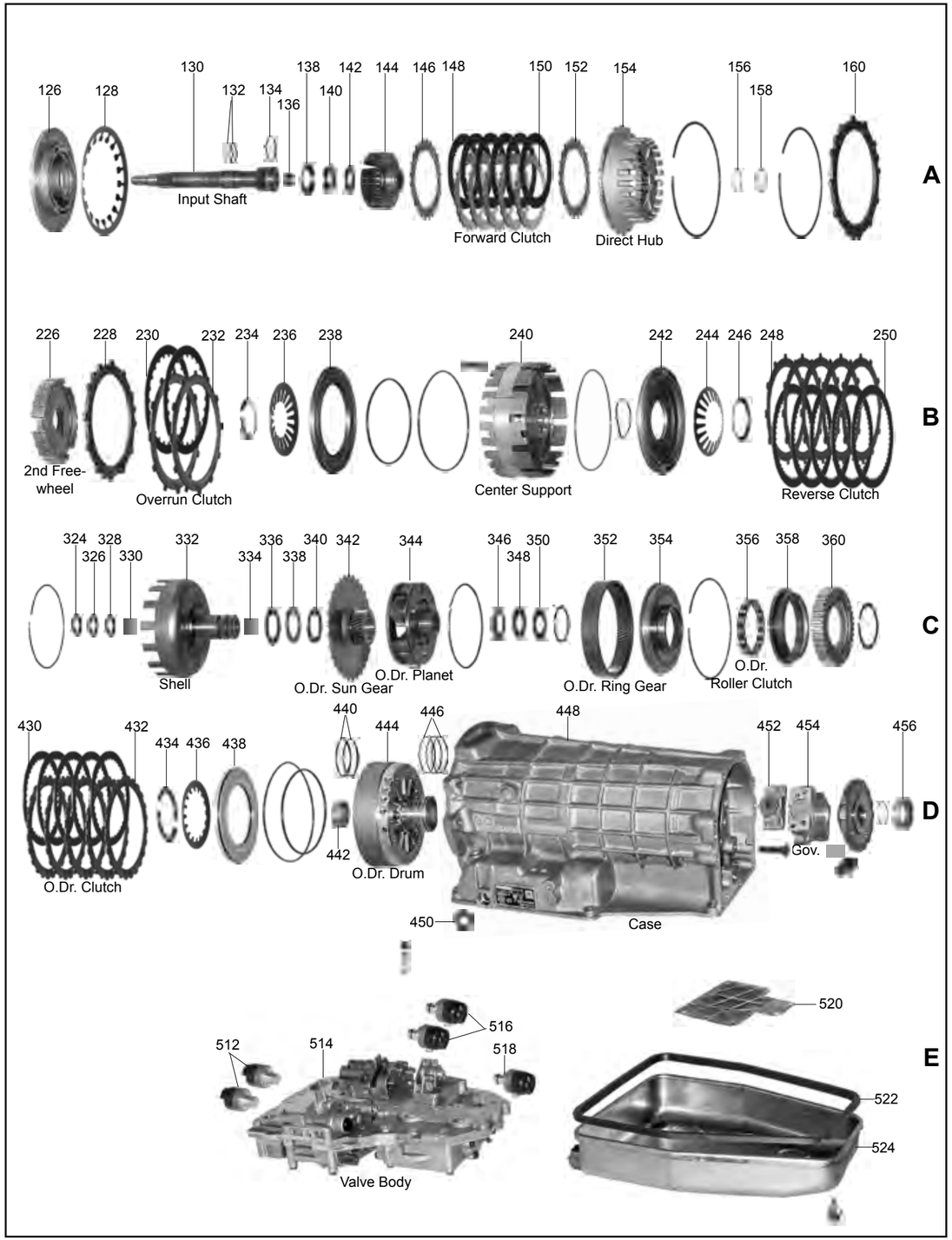
A
126
128
130
132
134
136
138
140
142
144
146
148
150
152
154
156
158
160
Input Shaft
Forward Clutch
Direct Hub
B
226
228
230
232
234
236
238
240
242
244
246
248
250
2nd Free-wheel
Overrun Clutch
Center Support
Reverse Clutch
C
324
326
328
330
332
334
336
338
340
342
344
346
348
350
352
354
356
358
360
Shell
O.Dr. Sun Gear
O.Dr. Planet
O.Dr. Ring Gear
O.Dr. Roller Clutch
D
430
432
434
436
438
440
442
444
446
448
450
452
454
456
O.Dr. Clutch
O.Dr. Drum
Case
Gov.
E
512
514
516
518
520
522
524
Valve Body

ILL.		Qty.	Year	Part #	Ref. #
MASTER OVERHAUL KITS (WITH STEELS)					
N.I.	ZF4HP22	1	84-Up	69006A	1043-298-097
N.I.	ZF4HP24	1	88-Up	69006E	N.L.
MASTER OVERHAUL KITS (LESS STEELS)					
N.I.	ZF4HP22	1	84-Up	69004A	1043-298-093
N.I.	ZF4HP24	1	88-Up	69004E	N.L.
OVERHAUL KITS (WITH RINGS AND SEALS)					
N.I.	ZF4HP22, ZF4HP24	1	84-Up	69002A	1043-298-092
GASKETS & O-RINGS					
104A	O-Ring, Pump	1	84-Up	69311A	07434-313-061
114A	Gasket, Pump Stator to Case	1	84-Up	69310B	0750-112-009
500E	Gasket, Extension Housing	1	84-Up	69305A	0750-112-012
522E	Gasket, Bottom Pan (Rubber)	1	84-Up	69300A	24111-215-488
METAL CLAD SEALS					
100A	Front	1	84-Up	69070	24311-207-433
450D	Manual Lever	1	84-Up	69072	24341-207-430
504E	Extension Housing (2.500" OD, BMW, Peugeot)	1	84-Up	69074	24111-207-426
504E	Extension Housing (Land Rover)	1	84-Up	78074	N.L.
504E	Extension Housing (Lincoln, w/ Boot)	1	84-Up	56074B	E2ZZ-7052A
SEALING RINGS & KITS					
N.I.	Ring Kit	1	84-Up	69175BK	4HP22MPSR
FRICTION PLATES					
148A	A Pack (Forward) (34T) (ZF4HP22)	5	84-Up	69108	1043-202-167
148A	A Pack (Forward) (40T) (ZF4HP24)	6	88-Up	69100	24231-215-441
200B	B Pack (Direct) (24T)	4-5	84-Up	69106	1043-202-041
224B	C Pack (Intermediate) (24T) (ZF4HP22)	4	84-Up	69106	1043-202-041
224B	C Pack (Intermediate) (24T) (ZF4HP24)	5	84-Up	69104	1043-217-009
250B	D Pack (Reverse) (58T) (ZF4HP24)	5	88-Up	69104E	1043-217-015
250B	D Pack (Reverse) (48T) (ZF4HP22)	5	84-Up	69104	1043-217-009
414D	E Pack (Direct Overrun) (40T)	4	84-Up	69100	24231-215-441
430D	F Pack (Overdrive) (40T)	4	84-Up	69100	24231-215-441
STEEL PLATES					
146A	A Pack (Forward) (.040") (Waved) (ZF4HP22)	2	84-Up	69129	1043-302-001
146A	A Pack (Forward) (.055") (Waved) (ZF4HP24)	2	88-Up	69129D	1043-330-140
150A	A Pack (Forward) (.047") (Selective)	AR	84-Up	69128B	1043-302-123
150A	A Pack (Forward) (.060") (Selective)	AR	84-Up	69128A	24231205917A
150A	A Pack (Forward) (.071") (ZF4HP22)	5-6	84-Up	69128	24231-205-917
150A	A Pack (Forward) (.082") (Selective)	AR	84-Up	69128D	N.L.
150A	A Pack (Forward) (.082") (ZF4HP24)	4-6	88-Up	69120	24231-215-453
202B	B Pack (Direct) (.047")) (Waved)	AR	84-Up	69126CA	1043-302-036
202B	B Pack (Direct) (.060")	AR	84-Up	69126A	24231-209-824
202B	B Pack (Direct) (.071")	4	84-Up	69126B	24231-205-935
202B	B Pack (Direct) (.082")	AR	84-Up	69126	24231-215-825
222B	C Pack (Intermediate) (.047") (Waved)	AR	84-Up	69126CA	1043-302-036
222B	C Pack (Intermediate) (.060")	AR	84-Up	69126A	24231-209-824
222B	C Pack (Intermediate) (.071")	3-4	84-Up	69126B	24231-205-935
222B	C Pack (Intermediate) (.082")	AR	84-Up	69126	24231-215-825
248B	D Pack (Reverse) (.047") (ZF4HP24)	5-6	88-Up	69126D	1043-317-040
248B	D Pack (Reverse) (.060") (ZF4HP22)	AR	84-Up	69126A	24231-209-824
248B	D Pack (Reverse) (.060") (ZF4HP24)	1	88-Up	69126DA	1043-317-061
248B	D Pack (Reverse) (.071") (ZF4HP22)	3-4	84-Up	69126B	24231-205-935
248B	D Pack (Reverse) (.071") (ZF4HP24)	AR	88-Up	69126DB	1043-317-062
248B	D Pack (Reverse) (.082") (ZF4HP22)	AR	84-Up	69126	24231-215-825
248B	D Pack (Reverse) (.082") (ZF4HP24)	AR	88-Up	69126DC	1043-317-063
300C	D Pack (Reverse) (.047") (Waved)	AR	84-Up	69126CA	1043-302-036
416D	E Pack (Direct Overrun) (24T) (.059")	4	84-Up	69134	24321-215-440
428D	F Pack (Overdrive) (Backing Plate)	1	84-Up	69140	N.L.
432D	F Pack (Overdrive) (24T) (.082")	4	84-Up	69120	24231-215-453

ILL.		Qty.	Year	Part #	Ref. #
FILTERS					
520E	ZF4HP22 (No Pick-Up Tube)	1	84-Up	69010A	24311-215-550
520E	ZF4HP22 (w/ 1 Pick-Up Tube)	1	84-Up	69010B	24311-218-204
520E	ZF4HP24 Land Rover	1	88-Up	69010E	1043-226-037
520E	ZF4HP24 Audi (2.500" Tube)	1	90-94	69010EB	1043-226-035
FILTER KITS					
N.I.	ZF4HP22 (No Pick-Up Tube)	1	84-Up	69011A	N.L.
N.I.	ZF4HP22 (w/ 1 Pick-Up Tube)	1	84-Up	69011B	N.L.
N.I.	ZF4HP24 Land Rover	1	88-Up	69011E	N.L.
N.I.	ZF4HP24 Audi (2.500" Tube)	1	90-94	69011EB	N.L.
BUSHINGS					
102A	Pump (.507" Wide)	1	84-93	69034	0750-101-031
102A	Pump (.664" Wide)	1	94-Up	69034B	0501-311-812
122A	Forward Drum, Center Support, & Governor Support	3	84-Up	69048	N.L.
ELECTRICAL COMPONENTS					
N.I.	Solenoid Master Kit (4 Shift & 1 EPC)	1	83-E89	69420K	MS-ZF4HP22
N.I.	Solenoid Master Kit (3 Shift & 1 EPC)	1	L89-Up	69420AK	1043-298-108
N.I.	Solenoid, Shift (5 Solenoid Type)	4	83-89	69421	N.L.
N.I.	Solenoid, Shift (4 Solenoid Type)	3	89-Up	69421A	0501-315-752
N.I.	Solenoid, Pressure Regulator	1	84-Up	69431	0501-206-997
N.I.	Solenoid, Pressure Regulator (Valve Housing)	1	89-Up	69431A	N.L.
N.I.	Sensor, Input / Output Speed	2	84-Up	69436A	0501-310-401
N.I.	Wire Harness, Internal (ZF4HP24)	1	84-Up	69446	1043-227-016
PUMPS					
108A	Pump Body & Gears (Bushing Type)	1	84-Up	69510A	N.L.
108A	Pump Body & Gears (Roller Bearing Type)	1	84-Up	69510B	1043-119-019
PUMP COMPONENTS					
112A	Stator (Cast# 158) (16mm Cooler Line Fitting)	1	84-Up	69520C	1043-222-078
N.I.	Shaft, Stator Tube	1	84-Up	69529	N.L.
DRUMS & COMPONENTS					
124A	Forward (A Pack)	1	84-Up	69554A	1043-202-054
128A	Belleville Spring, Forward (A Pack) ZF4HP22	1	84-Up	69974	1043-302-007
128A	Belleville Spring, Forward (A Pack) ZF4HP24	1	84-Up	69974B	N.L.
204B	Belleville Spring, Direct (B Pack)	1	84-Up	69975	0301-302-028
218B	Belleville Spring, Intermediate (C Pack)	2	84-Up	69979	0301-331-031
244B	Belleville Spring, Reverse (D Pack)	1	84-Up	69976	0301-317-003
420D	Belleville Spring, Direct Overrun (E Pack)	1	84-Up	69977	1043-330-079
436D	Belleville Spring, Overdrive (F Pack)	1	84-Up	69971	1043-330-049
444D	Overdrive (F Pack) (Hydraulic Units) (4 Clutch)	1	84-Up	69550A	1043-230-082
PLANETS AND COMPONENTS					
304C	Planet, Front w/ Sprag (4 Gear)	1	84-Up	69582B	N.L.
314C	Planet, Rear	1	84-Up	69582C	N.L.
ONE WAY CLUTCHES					
226B	Roller Clutch, Intermediate	1	84-Up	69642	1043-231-006
356C	Sprag, Overdrive	1	84-Up	69650	1043-230-097
MISCELLANEOUS COMPONENTS					
N.I.	Kickdown Cable Repair Kit	1	84-Up	57451	N.L.

ILL.		Qty.	Year	Part #	Ref. #
MASTER OVERHAUL KITS (WITH STEELS)					
N.I.	ZF5HP18	1	93-Up	179006A	N.L.
MASTER OVERHAUL KITS (LESS STEELS)					
N.I.	ZF5HP18	1	93-Up	179004A	N.L.
OVERHAUL KITS (WITH RINGS AND SEALS)					
N.I.	ZF5HP18	1	93-Up	179002A	N.L.
BONDED PISTONS					
N.I.	Bonded Piston Kit	1	93-Up	179960K	1056-298-069
N.I.	Piston, F Clutch (Bonded)	1	93-Up	179960A	N.L.
N.I.	Piston, G Clutch (Bonded)	1	93-Up	179960B	0750-132-057
GASKETS & O-RINGS					
N.I.	Gasket, Bottom Pan	1	93-Up	179300A	1056-301-010
N.I.	Gasket, Valve Body (Spec # Up-080)	1	93-Up	179320A	1056-327-100
N.I.	Gasket, Valve Body (Spec # Up-081)	1	93-Up	179320B	1056-327-110
METAL CLAD SEALS					
N.I.	Front	1	93-Up	69070	24311-207-433
N.I.	Manual Lever	1	93-Up	69072	24341-207-430
N.I.	Extension Housing	1	93-Up	179074A	N.L.
FRICTION PLATES					
N.I.	A Pack (Forward)	4-5	93-Up	79108E	1050-202-002
N.I.	B Pack (Reverse)	2-3	93-Up	79110E	1056-272-024
N.I.	C Pack (2nd)	3-4	93-Up	69104	1043-217-009
N.I.	D Pack (Low/ Reverse)	4-6	93-Up	79108E	1050-202-002
N.I.	E Pack (3-4 Clutch)	4-5	93-Up	79100E	1050-230-033
N.I.	F Pack (5th Overdrive)	3-4	93-Up	79104P	1036-202-018
N.I.	G Pack (5th Overdrive)	4	93-Up	79104P	1036-202-018
STEEL PLATES					
N.I.	A Pack (Forward)	4-5	93-Up	69128E	1050-302-011
N.I.	A Pack (Forward) (Waved)	1	93-Up	69129E	1050-302-012
N.I.	B Pack (Reverse)	2-3	93-Up	69128E	1050-302-011
N.I.	C Pack (2nd)	2-3	93-Up	69126	24231-215-825
N.I.	C Pack (2nd) (Apply Plate)	1	93-Up	179124A	1043-202-092
N.I.	C Pack (2nd) (Waved)	1	93-Up	69126CA	1043-302-036
N.I.	D Pack (Low/ Reverse)	5-6	93-Up	69128E	1050-302-011
N.I.	E Pack (3-4 Clutch)	4-5	93-Up	79120E	1050-330-017
N.I.	F Pack (5th Overdrive) (.118")	5	93-Up	129120	1060-377-002
N.I.	G Pack (5th Overdrive) (.070")	3-4	93-Up	79124P	1036-302-015
FILTERS					
N.I.	ZF5HP18	1	93-Up	179010A	1056-298-047
FILTER KITS					
N.I.	ZF5HP18	1	93-Up	179011A	N.L.
BANDS					
N.I.	Brake	1	93-Up	179020A	0501-208-847
BUSHINGS					
N.I.	Bushing Kit, F Drum	1	93-Up	179030A	N.L.
ELECTRICAL COMPONENTS					
N.I.	Solenoid Master Kit (BMW 520i)	1	93-Up	179420CK	1056-298-067
N.I.	Solenoid Master Kit (BMW 525i)	1	93-Up	179420BK	1056-298-067
N.I.	Solenoid Master Kit (BMW 530i)	1	93-Up	179420AK	1056-298-066
N.I.	Solenoid, Shift (All)	1	93-Up	69421A	0501-315-752
N.I.	Solenoid, Shift (BMW 520i, 530i)	5	93-Up	179421	0750-132-105
N.I.	Solenoid, Shift (BMW 525i)	5	93-Up	179421A	N.L.
N.I.	Solenoid, EPC w/ Housing (7 Solenoid) (BMW 530)	1	93-Up	179431	N.L.
N.I.	Solenoid, EPC w/ Housing (7 Solenoid) (BMW 525)	1	93-Up	179431A	N.L.
N.I.	Solenoid, EPC w/ Housing (7 Solenoid) (BMW 520)	1	93-Up	179431B	N.L.

ILL.		Qty.	Year	Part #	Ref. #
VALVE BODY RECALIBRATION KITS					
N.I.	Valve Body Kit	1	93-Up	179165	N.L.
DRUMS & COMPONENTS					
N.I.	Bonded Piston Kit	1	93-Up	179960K	1056-298-069
N.I.	Drum "D"	1	93-03	179550D	1056-383-032
N.I.	Drum "F"	1	93-97	179550F	1056-277-047
N.I.	Piston, F Clutch (Bonded)	1	93-Up	179960A	N.L.
N.I.	Piston, G Clutch (Bonded)	1	93-Up	179960B	0750-132-057
SHELLS & SUPPORTS					
N.I.	Stator Support (Exc. 520i)	1	93-Up	179520	1056-210-117
MISCELLANEOUS COMPONENTS					
N.I.	Valve, Manual	1	93-Up	179507B	1056-327-173
N.I.	Check Ball (.236" Plastic)	1	93-Up	159741-5	1043-326-037
TECHNICAL MANUALS					
N.I.	Repair Manual	1	93-Up	179400A	N.L.
N.I.	Technical Manual	1	93-Up	179400C	N.L.
Notes					

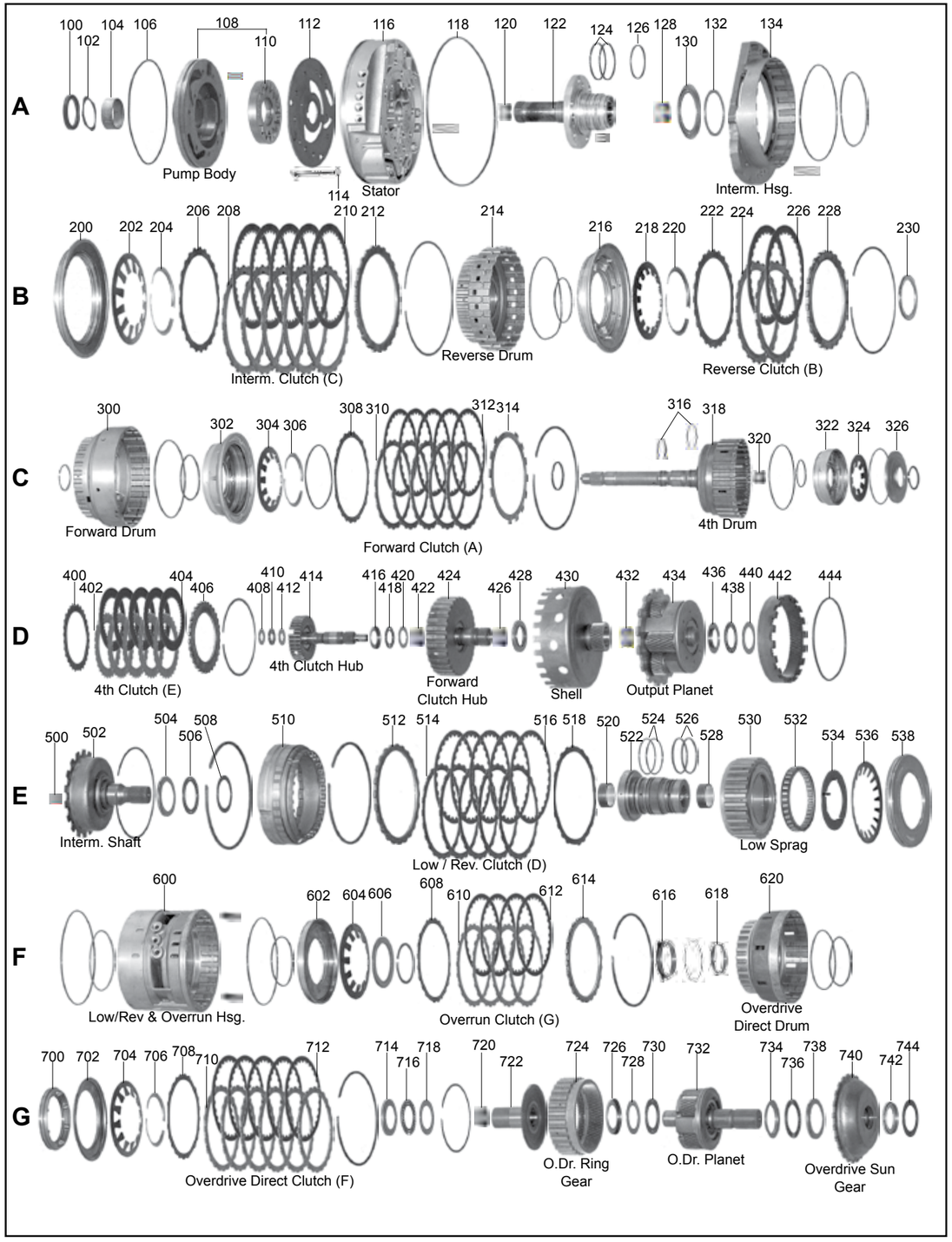
A
B
C
D
E
F
G
Pump Body
Stator
Interm. Hsg.
Interm. Clutch (C)
Reverse Drum
Reverse Clutch (B)
Forward Drum
Forward Clutch (A)
4th Drum
4th Clutch (E)
4th Clutch Hub
Forward Clutch Hub
Shell
Output Planet
Interm. Shaft
Low / Rev. Clutch (D)
Low Sprag
Low/Rev & Overrun Hsg.
Overrun Clutch (G)
Overdrive Direct Drum
Overdrive Direct Clutch (F)
O.Dr. Ring Gear
O.Dr. Planet
Overdrive Sun Gear

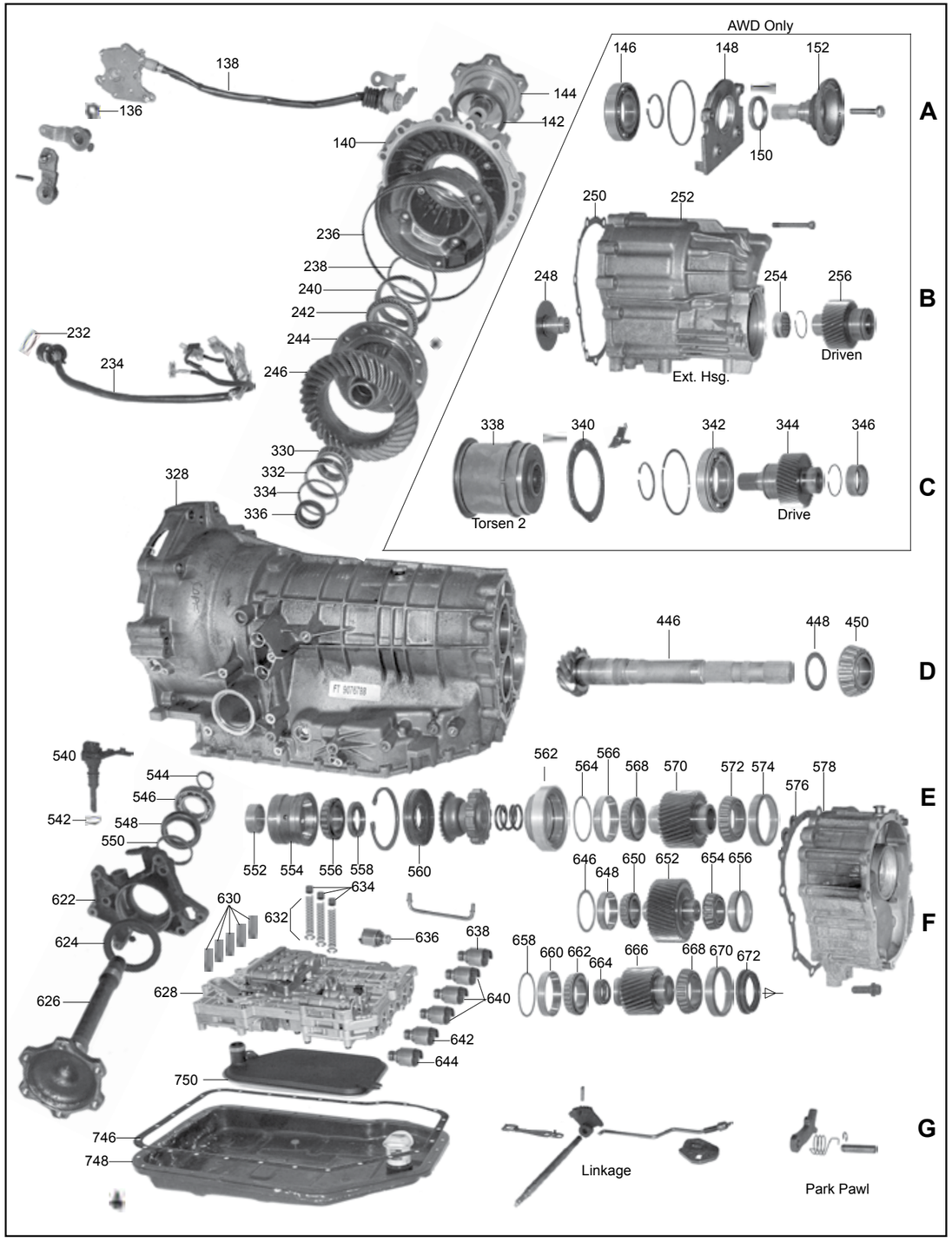
AWD Only
A
B
C
D
E
F
G
Ext. Hsg.
Driven
Torsen 2
Drive
FT 9076788
Linkage
Park Pawl

ILL.		Qty.	Year	Part #	Ref. #
MASTER OVERHAUL KITS (WITH STEELS)					
N.I.	ZF5HP19 (Rwd) (BMW) (For 3 Pack Designs, Order 4 of 175124A)	1	97-Up	175006	N.L.
N.I.	ZF5HP19FL (Fwd) (Audi, VW, Porsche)	1	96-99	175006A	N.L.
N.I.	ZF5HP19FL (Fwd) (Audi, VW, Porsche)	1	00-Up	175006AA	N.L.
N.I.	ZF5HP19FLA (Awd) (Audi, VW 4wd)	1	96-99	175006B	N.L.
N.I.	ZF5HP19FLA (Awd) (Audi, VW 4wd)	1	00-Up	175006BA	N.L.
MASTER OVERHAUL KITS (LESS STEELS)					
N.I.	ZF5HP19 (Rwd)	1	97-Up	175004	N.L.
N.I.	ZF5HP19FL (Fwd)	1	95-Up	175004A	N.L.
N.I.	ZF5HP19FLA (Awd)	1	95-Up	175004B	N.L.
OVERHAUL KITS (WITH RINGS AND SEALS)					
N.I.	ZF5HP19 (Rwd)	1	97-Up	175002	N.L.
N.I.	ZF5HP19FL (Fwd)	1	95-Up	175002A	N.L.
N.I.	ZF5HP19FLA (Awd)	1	95-Up	175002B	N.L.
GASKETS & O-RINGS					
746G	Gasket, Pan (Rwd) (5HP19)	1	97-Up	175300	1060-390-002
746G	Gasket, Pan (Fwd, Awd) (5HP19FL/5HP19FLA)	1	95-Up	175300A	1056-303-031
METAL CLAD SEALS					
100A	Front Pump	1	95-Up	79070E	0750-111-079
150A	Rear	1	00-Up	175074	0734-319-607
FRICTION PLATES					
210B	C Pack	3-5	95-Up	175104	N.L.
226B	B Pack	2	95-Up	175110	N.L.
312C	A Pack	4-5	95-Up	79108E	1050-202-002
404D	E Pack	4-5	95-Up	79100E	1050-230-033
516E	D Pack	5-6	95-Up	79108E	1050-202-002
612F	G Pack	3-4	95-Up	79104P	1036-202-018
712G	F Pack	4-5	95-Up	79104P	1036-202-018
STEEL PLATES					
208B	C Pack (.071")	4-5	95-Up	175124	1060-310-004
208B	C Pack (.094")	4	95-Up	175124A	1060-310-053
208B	C Pack (.130")	3	95-Up	175124B	1060-310-027
224B	B Pack	2	95-Up	175130	1060-372-002
310C	A Pack	4-5	95-Up	69128E	1050-302-011
402D	E Pack	4-5	95-Up	79120E	1050-330-017
514E	D Pack	5-6	95-Up	69128E	1050-302-011
518E	G Pack	3-4	95-Up	79124P	1036-302-015
710G	F Pack	5-6	95-Up	175120	1060-377-002
FILTERS					
750G	ZF5HP19	1	97-Up	175010	0501-210-388
750G	ZF5HP19FL, ZF5HP19FLA	1	95-Up	175010A	0501-209-251
BUSHINGS					
104A	Pump (Bronze)	1	95-Up	175034B	N.L.
ELECTRICAL COMPONENTS					
138A	Sensor, MLPS (5HP19)	1	97-Up	175410	0501-317-781
138A	Sensor, MLPS (5HP19FL) (Exc 072, 088)	1	95-Up	175410A	0501-209-896
138A	Sensor, MLPS (5HP19FL) (072, 088)	1	95-Up	175410B	0501-317-994
138A	Sensor, MLPS (5HP19FLA) (002, 073 Various)	1	95-Up	175410C	0501-209-896
138A	Sensor, MLPS (5HP19FLA) (075, 087, 093, 100, 101, 103)	1	95-Up	175410B	0501-317-994
234B	Harness, Internal Wire (5HP19)	1	97-Up	175446	1060-227-021
234B	Harness, Internal Wire (5HP19FL) (005, 006, 011, 013, 021, 027)	1	95-Up	175446A	1056-277-046
234B	Harness, Internal Wire (5HP19FL) (049, 059, 072, 088)	1	95-Up	175446B	1060-227-022
234B	Harness, Internal Wire (5HP19FLA) (002, 012, 013, 018, 036)	1	95-Up	175446A	1056-277-046
234B	Harness, Internal Wire (5HP19FLA) (Various 030 - 103)	1	95-Up	175446B	1060-227-022
N.I.	Solenoid Master Kit (BMW)	1	95-Up	175420AK	1060-298-033
N.I.	Solenoid Master Kit (Audi & VW Speed Sensor on Case)	1	95-Up	175420AK	1060-298-033
N.I.	Solenoid Master Kit (Audi & VW Speed Sensor on Valve Body)	1	95-Up	175420CK	1060-298-035
N.I.	Solenoid Master Kit (Audi V8 & Porsche Exc. 1060 050 002)	1	95-97	175420BK	1060-298-034

ILL.		Qty.	Year	Part #	Ref. #
ELECTRICAL COMPONENTS (Cont.)					
N.I.	Solenoid Master Kit (Porsche 1060 050 002)	1	95-Up	175420CK	1060-298-035
N.I.	Solenoid, Shift (Speed Sensor on Case)	3	95-Up	175420A	N.L.
N.I.	Solenoid, Shift (Speed Sensor on Valve Body)	3	95-Up	175420	0750-132-122
N.I.	Solenoid, EPC (BMW & Audi/VW w/ Speed Sensor on Case)	1	95-Up	175431	0501-210-725
N.I.	Solenoid, EPC (Audi/VW w/ Speed Sensor on Valve Body)	1	95-Up	175431A	0501-210-875
N.I.	Solenoid, EPC (Audi V8)	1	95-Up	175431B	N.L.
N.I.	Solenoid, EPC (BMW & Audi/VW w/ Speed Sensor on Case)	3	95-Up	175431C	N.L.
N.I.	Solenoid, EPC (Audi/VW w/ Speed Sensor on Valve Body & Audi V8)	3	95-Up	175431D	N.L.
N.I.	Sensor, Speed w/ Wire (Internal) (All)	1	95-Up	175436	0501-322-866
N.I.	Sensor, Speed w/o Wire (Internal) (All)	1	95-Up	175438	0501-311-086
N.I.	Sensor, Speed (External) (FL, FLA)	1	95-Up	175439	0501-314-432
PUMPS					
108A	Pump Body & Gears (ZF5HP19)	1	97-Up	175510	1060-210-047
108A	Pump Body & Gears (ZF5HP19FL, FLA)	1	95-03	175510A	1060-210-024
DRUMS & COMPONENTS					
600F	Drum, "D" (ZF5HP19)	1	97-03	179550D	1056-383-032
600F	Drum, "D" (ZF5HP19FL, FLA)	1	95-03	175550D	1060-373-014
620F	Drum, "F"	1	95-03	175550	1060-277-010
700G	Piston, "F" Drum	1	95-Up	175962	1056-377-038
ONE WAY CLUTCHES					
532E	Sprag Assembly, Hub & Low Sprag (Audi, VW) (repl OE Bearing Type)	1	95-03	175648A	1060-273-013
532E	Sprag Assembly, Hub & Low Sprag (BMW) (repl OE Bearing Type)	1	97-02	175648B	1060-273-035
TECHNICAL MANUALS					
N.I.	Repair Manual, ZF5HP19	1	95-Up	175400A	N.L.
N.I.	Repair Manual, ZF5HP19FL / FLA	1	95-Up	175400B	N.L.
N.I.	Technical Manual, Functional Description, ZF5HP19	1	95-Up	175400AF	N.L.
N.I.	Technical Manual, Functional Description, ZF5HP19FL / FLA	1	95-Up	175400BF	N.L.

Notes

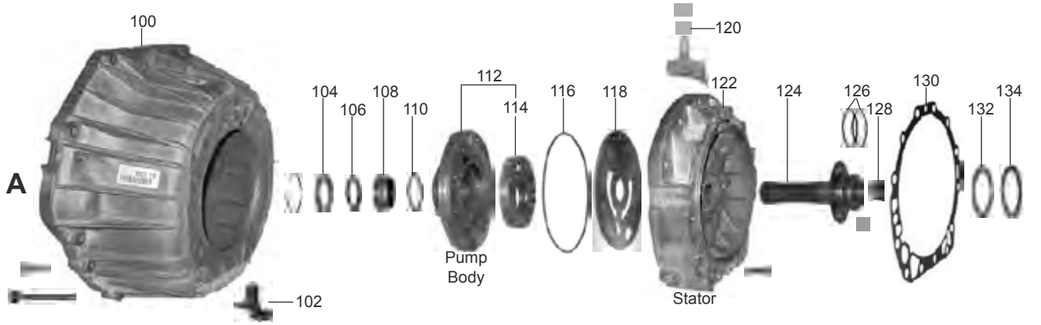
A
100
102
104
106
108
110
112
114
116
118
120
122
124
126
128
130
132
134
Pump Body
Stator

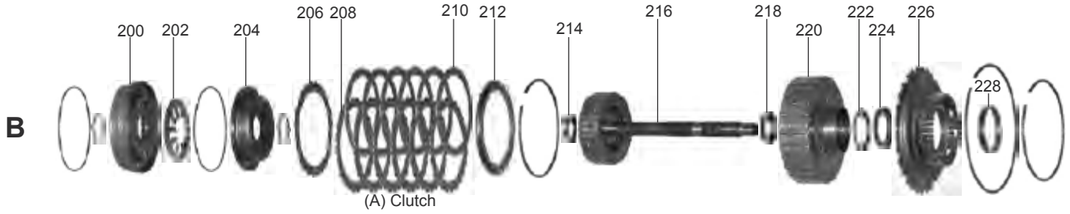
B
200
202
204
206
208
210
212
214
216
218
220
222
224
226
228
(A) Clutch

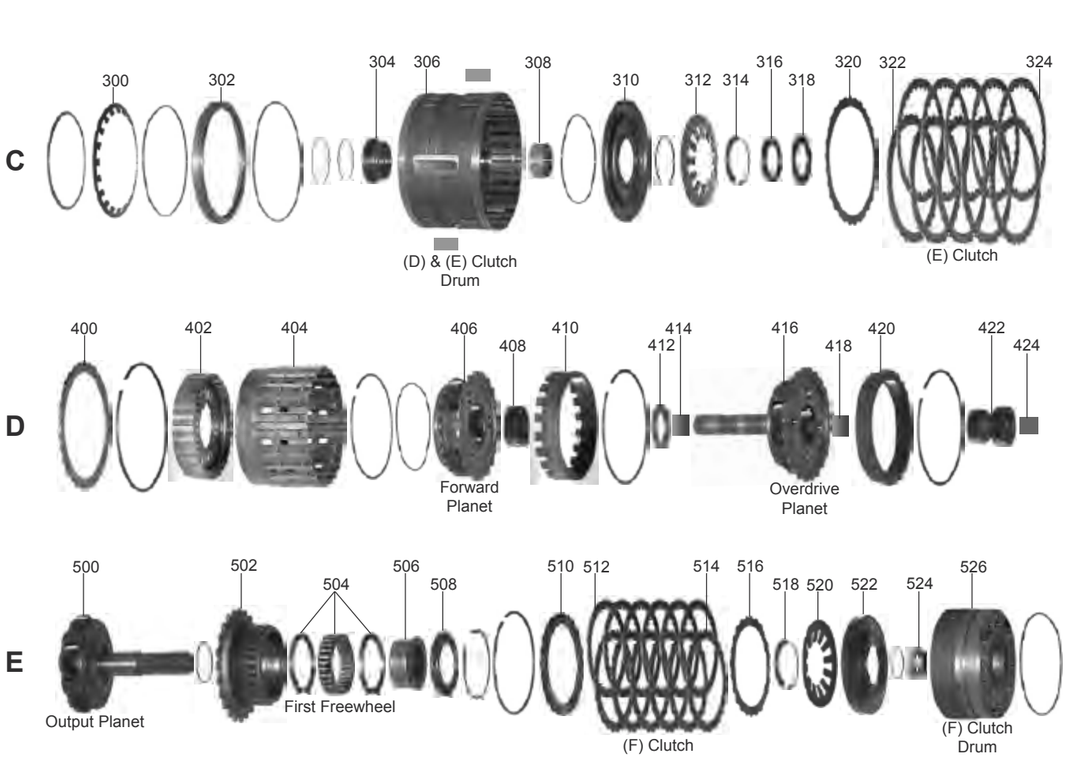
C
300
302
304
306
308
310
312
314
316
318
320
322
324
(D) & (E) Clutch Drum
(E) Clutch
D
400
402
404
406
408
410
412
414
416
418
420
422
424
Forward Planet
Overdrive Planet
E
500
502
504
506
508
510
512
514
516
518
520
522
524
526
Output Planet
First Freewheel
(F) Clutch
(F) Clutch Drum

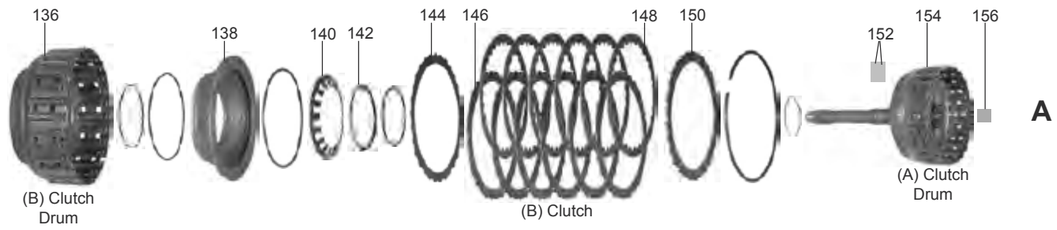
A
136
138
140
142
144
146
148
150
152
154
156
(B) Clutch Drum
(B) Clutch
(A) Clutch Drum

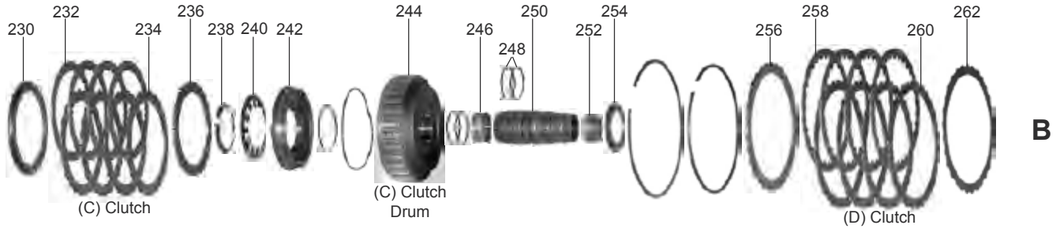
B
230
232
234
236
238
240
242
244
246
248
250
252
254
256
258
260
262
(C) Clutch
(C) Clutch Drum
(D) Clutch

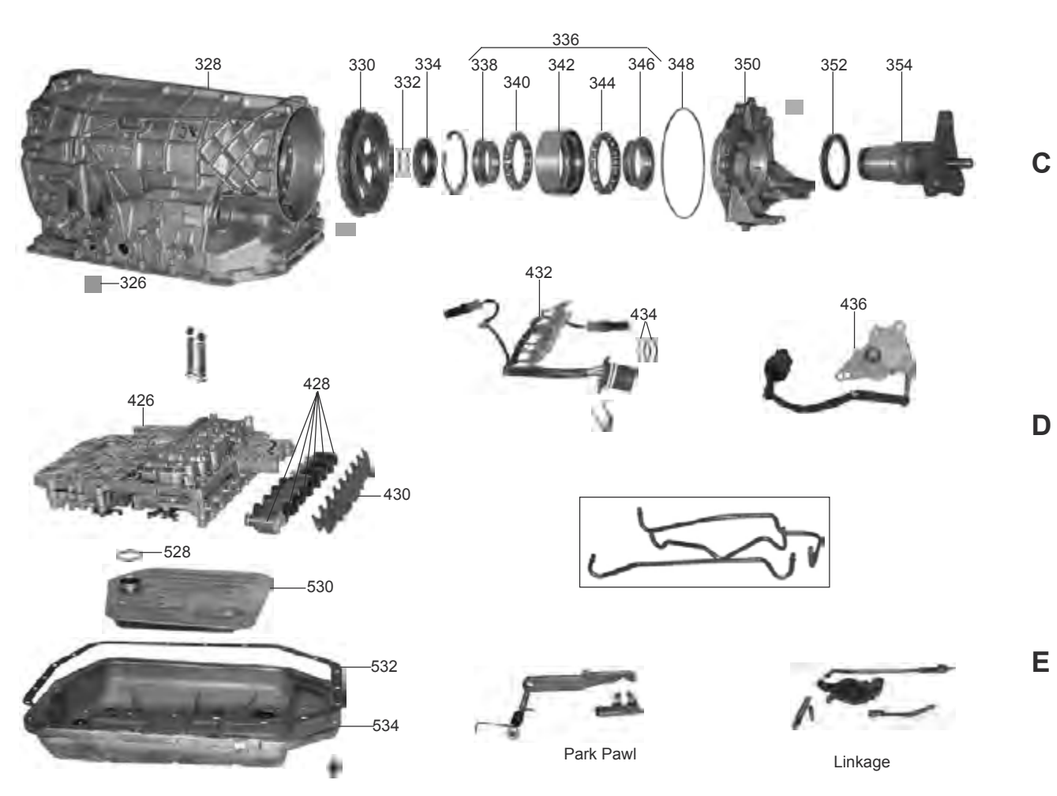
C
328
330
332
334
336
338
340
342
344
346
348
350
352
354
326
D
426
428
430
432
434
436
E
528
530
532
534
Park Pawl
Linkage

ILL.		Qty.	Year	Part #	Ref. #
MASTER OVERHAUL KITS (WITH STEELS)					
N.I.	ZF5HP24	1	96-Up	185006A	N.L.
N.I.	ZF5HP24A	1	97-Up	185006C	N.L.
MASTER OVERHAUL KITS (LESS STEELS)					
N.I.	ZF5HP24	1	96-Up	185004A	N.L.
N.I.	ZF5HP24A	1	97-Up	185004C	N.L.
OVERHAUL KITS (WITH RINGS AND SEALS)					
N.I.	ZF5HP24	1	96-Up	185002	1058-298-022
N.I.	ZF5HP24A	1	97-Up	185002A	1058-298-023
BONDED PISTONS					
522E	Piston, “F” Clutch (Bonded)	1	96-Up	185967	0501-212-967
GASKETS & O-RINGS					
528E	O-Ring, Filter (ZF5HP24)	1	96-Up	185379	N.L.
532E	Gasket, Pan (ZF5HP24)	1	96-Up	185300	0501-319-899
532E	Gasket, Pan (ZF5HP24A)	1	97-Up	185300A	1058-303-015
METAL CLAD SEALS					
104A	Front Pump	1	96-Up	69070	24311-207-433
352C	Extension Housing, Land Rover	1	03-Up	185074	96020744
FRICTION PLATES					
148A	B Pack	6	96-Up	185106	N.L.
210B	A Pack	6	96-Up	69100	24231-215-441
232B	C Pack	4	96-Up	69100	24231-215-441
258B	D Pack	3-5	96-Up	185106	N.L.
324C	E Pack	4-5	96-Up	185106	N.L.
512E	F Pack	6	96-Up	185108	1055-270-030
STEEL PLATES					
146A	B Pack	6	96-Up	185126	N.L.
208B	A Pack	6	96-Up	185128	N.L.
234B	C Pack	4	96-Up	185128	N.L.
260B	D Pack	3-5	96-Up	185126	N.L.
322C	E Pack	4-5	96-Up	185126	N.L.
514E	F Pack	6	96-Up	185124	1055-374-024
FILTERS					
530E	ZF5HP24	1	96-Up	185010	0501-004-925
530E	ZF5HP24A	1	97-Up	185010B	0501-006-460
FILTER KITS					
N.I.	ZF5HP24	1	96-Up	185011	N.L.
N.I.	ZF5HP24A	1	97-Up	185011B	N.L.
BUSHINGS					
128A	Stator, Rear	1	96-Up	185037	N.L.
ELECTRICAL COMPONENTS					
432D	Harness, Internal Wire (ZF5HP24)	1	96-Up	185446	1058-227-019
432D	Harness, Internal Wire (ZF5HP24A)	1	97-Up	185446A	1058-227-020
N.I.	Sensor, Input & Output Speed (Internal) (ZF5HP24)	2	96-Up	69436A	0501-310-401
N.I.	Sensor, Speed (Front) (External) (ZF5HP24A)	1	97-Up	185439	0501-205-543
N.I.	Sensor, Speed (ISS) (Internal) (ZF5HP24A)	1	97-Up	175438	0501-311-086
N.I.	Sensor, Speed (Rear) (External) (ZF5HP24A)	1	97-Up	185439	0501-208-543
N.I.	Solenoid Master Kit (Audi) (BMW from 020) (Jaguar from 026)	1	98-Up	175420BK	1060-298-034
N.I.	Solenoid Master Kit (BMW to 018) (Jaguar to 024)	1	96-98	175420CK	1060-298-035
N.I.	Solenoid, EPC (All)	4	96-Up	175431D	N.L.
N.I.	Solenoid, EPC (Audi) (BMW from 020) (Jaguar from 026)	1	98-Up	159431A	0501-210-875
N.I.	Solenoid, EPC (BMW to 018) (Jaguar to 024)	1	96-98	175431	0501-210-725
N.I.	Solenoid, Shift (All)	3	96-Up	175420	0750-132-122
VALVE BODY RECALIBRATION KITS					
N.I.	Valve Body Kit, ZF5HP24	1	96-Up	185165	N.L.

ILL.		Qty.	Year	Part #	Ref. #
PUMPS					
112A	Pump Body & Gears (ZF5HP24)	1	96-Up	185510	1058-210-061
112A	Pump Body & Gears (ZF5HP24A)	1	97-Up	185510A	1058-210-062
PUMP COMPONENTS					
118A	Pump Plate, Intermediate (ZF5HP24)	1	96-Up	185544	1058-310-074
118A	Pump Plate, Intermediate (ZF5HP24A)	1	97-Up	185544A	1058-310-024
DRUMS & COMPONENTS					
154A	Drum, “A”	1	96-Up	185554A	1058-270-040
216B	Hub w/ Shaft (“A”) (ZF5HP24)	1	96-Up	185570	N.L.
216B	Hub w/ Shaft (“A”) (ZF5HP24A)	1	97-Up	185570B	1058-271-041
310C	Piston, “E” Clutch (fits in the “D” Cylinder)	1	96-Up	185962	1058-375-020
522C	Piston, “F” Clutch (Bonded)	1	96-Up	185967	0501-212-967
526E	Drum, “F”	1	96-Up	185550	1058-277-001
VALVE BODIES & GOVERNORS					
426D	Valve Body (BMW, Jaguar) (Sol # 05012-10060)	1	96-Up	185740-1	N.L.
426D	Valve Body (BMW, Jaguar) (Sol # 05012-09875)	1	96-E98	185740-3	N.L.
426D	Valve Body (Audi, VW)	1	97-Up	185740-2	N.L.
MISCELLANEOUS COMPONENTS					
N.I.	Valve, Pressure Regulator (2nd Design)	1	96-Up	159507P	1058-327-030
SERVOS AND ACCUMULATORS					
N.I.	Piston, Accumulator (Plastic) (ZF5HP24)	2	96-Up	185927	1058-327-017
N.I.	Piston, Accumulator (Aluminum) (ZF5HP24A) (Will Replace Plastic)	2	97-Up	185927A	1058-327-087
TECHNICAL MANUALS					
N.I.	Repair Manual, ZF5HP24 (Rwd)	1	96-Up	185400A	N.L.
N.I.	Repair Manual, ZF5HP24 (Exc Rwd)	1	97-Up	185400B	N.L.
N.I.	Technical Manual, Functional Description (All)	1	96-Up	185400AF	N.L.

Notes

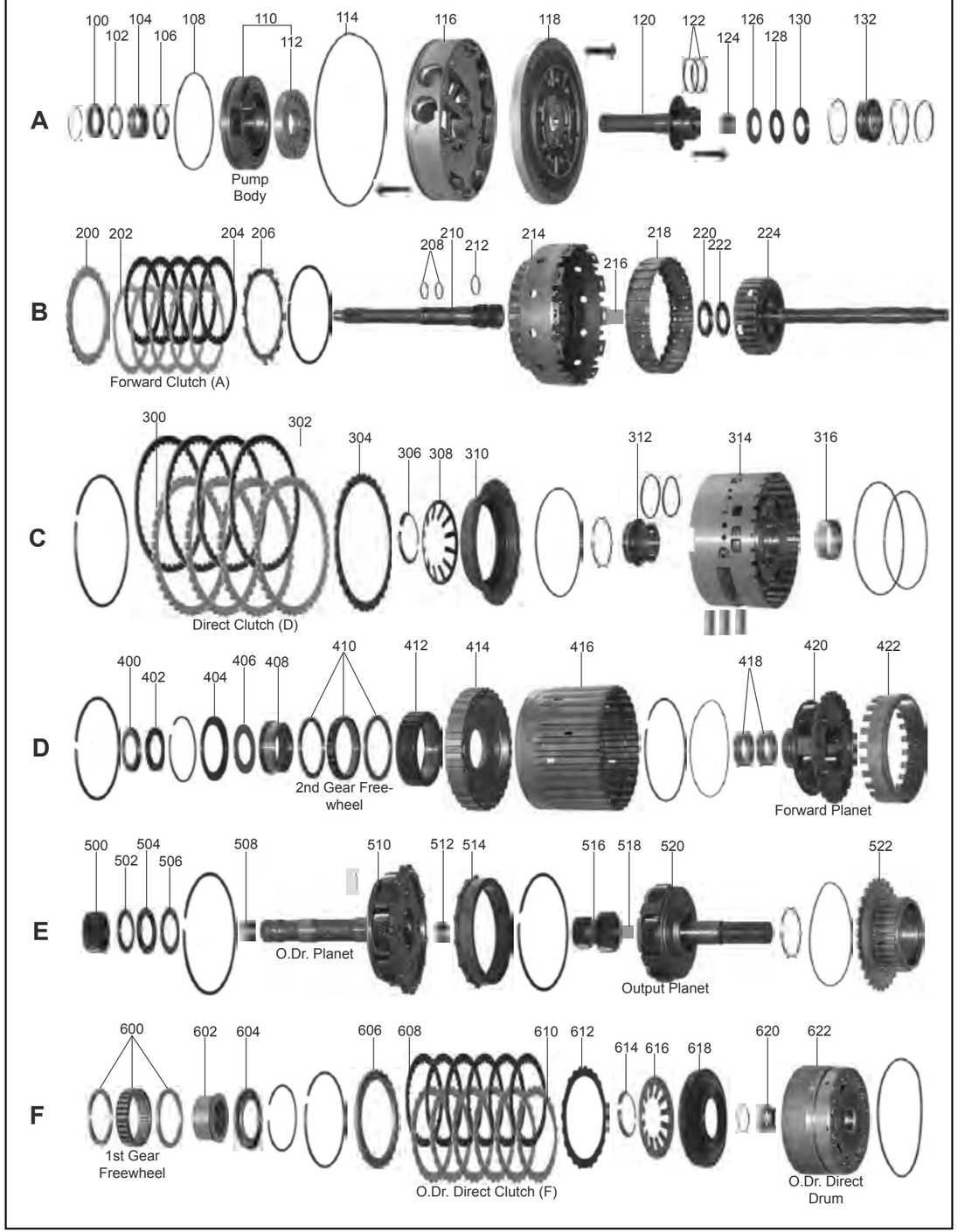
A
100 102 104 106 108 110 112 114 116 118 120 122 124 126 128 130 132
Pump Body
B
200 202 204 206 208 210 212 214 216 218 220 222 224
Forward Clutch (A)
C
300 302 304 306 308 310 312 314 316
Direct Clutch (D)
D
400 402 404 406 408 410 412 414 416 418 420 422
2nd Gear Free-wheel
Forward Planet
E
500 502 504 506 508 510 512 514 516 518 520 522
O.Dr. Planet
Output Planet
F
600 602 604 606 608 610 612 614 616 618 620 622
1st Gear Freewheel
O.Dr. Direct Clutch (F)
O.Dr. Direct Drum

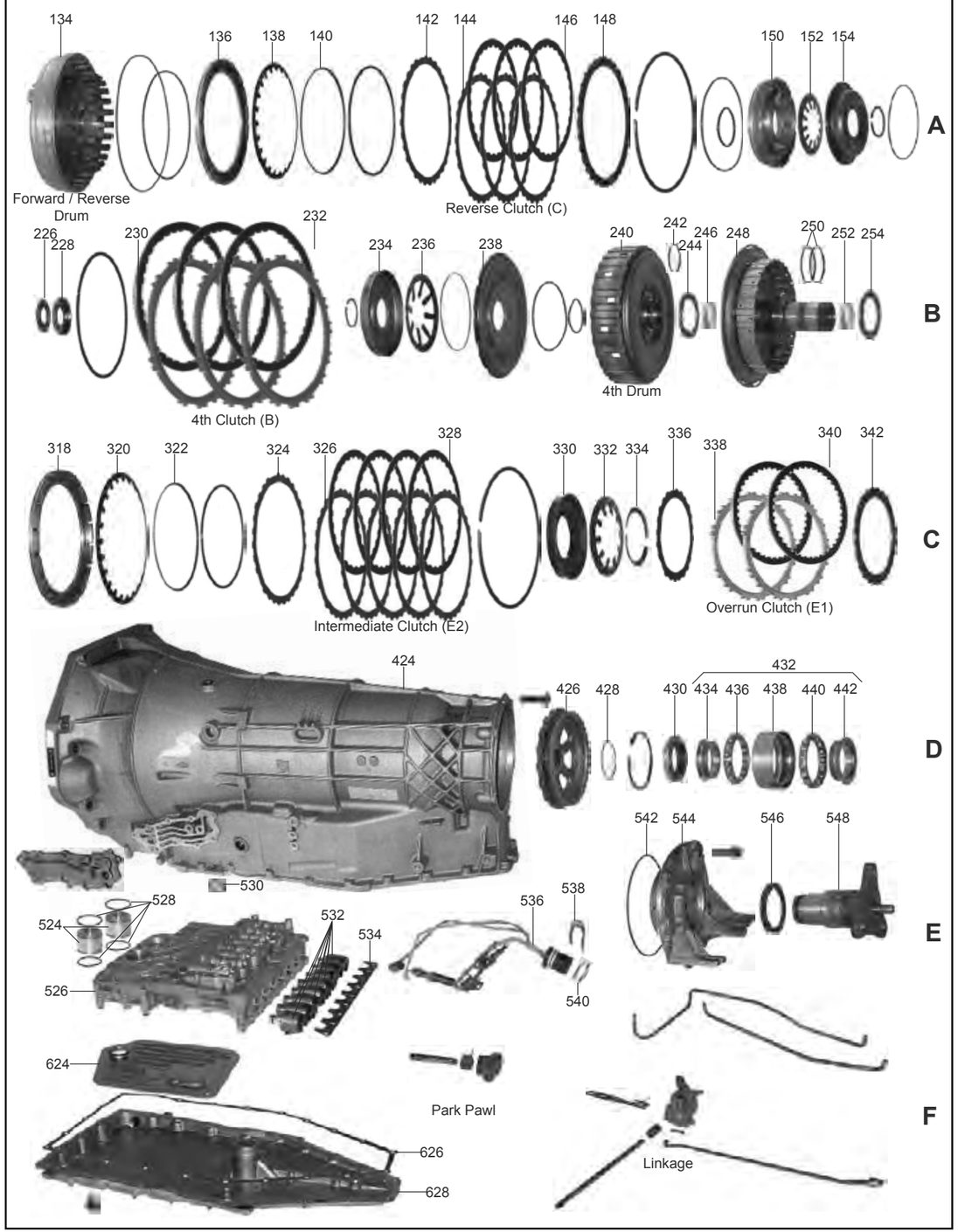
A
134 136 138 140 142 144 146 148 150 152 154
Forward / Reverse Drum
Reverse Clutch (C)
B
226 228 230 232 234 236 238 240 242 244 246 248 250 252 254
4th Clutch (B)
4th Drum
C
318 320 322 324 326 328 330 332 334 336 338 340 342
Intermediate Clutch (E2)
Overrun Clutch (E1)
D
424 426 428 430 432 434 436 438 440 442
E
524 526 528 530 532 534 536 538 540 542 544 546 548
F
624 626 628
Park Pawl
Linkage

ILL.		Qty.	Year	Part #	Ref. #
MASTER OVERHAUL KITS (WITH STEELS)					
N.I.	ZF5HP30	1	91-Up	159006A	N.L.
MASTER OVERHAUL KITS (LESS STEELS)					
N.I.	ZF5HP30	1	91-Up	159004A	N.L.
OVERHAUL KITS (WITH RINGS AND SEALS)					
N.I.	ZF5HP30	1	91-Up	159002A	1055-298-019
BONDED PISTONS					
N.I.	Bonded Piston Kit	1	91-Up	159960K	1055-298-030
310C	Piston, "D" (Bonded)	1	91-Up	185963	N.L.
330C	Piston, "E1" (Bonded)	1	91-Up	185962	1058-375-020
618F	Piston, "F" (Bonded)	1	91-Up	185967	0501-212-967
GASKETS & O-RINGS					
626F	Gasket, Pan		91-Up	159300	0750-112-155
N.I.	Gasket, Valve Body (Models 308, 309, 312)	1	91-Up	159320	N.L.
N.I.	Gasket, Valve Body (Models 316-Up)	1	91-Up	159320A	N.L.
METAL CLAD SEALS					
100A	Front Pump	1	91-Up	69070	24311-207-433
546E	Extension Housing	1	91-Up	159074	N.L.
FRICTION PLATES					
204B	A, E1, F (5.63" OD)	15-16	91-Up	159108	1055-270-030
302C	B, C, D, E2 (8.00" OD)	13-17	91-Up	159106	1055-271-025
STEEL PLATES					
202B	A Clutch (27T)	5	91-Up	159128	1055-370-089
300C	B, C, D, E2 (32T)	14-17	91-Up	159126	1055-371-003
338C	E1, F (24T)	11	91-Up	159124	1055-374-024
PRESSURE PLATES					
148A	C Clutch (2nd Design)	1	91-Up	159144	1055-370-095
FILTERS					
624F	ZF5HP30	1	91-Up	159010A	1055-298-015
FILTER KITS					
N.I.	ZF5HP30	1	91-Up	159011A	N.L.
ELECTRICAL COMPONENTS					
N.I.	Solenoid Master Kit (BMW V8 Engine)	1	91-Up	159420K	1055-298-029
N.I.	Solenoid Master Kit (All Exc. BMW V8 Engine)	1	91-Up	159420AK	1055-298-028
N.I.	Solenoid, Shift (All)	3	91-Up	175420	0750-132-122
N.I.	Solenoid, EPC (BMW V8)	1	91-Up	159431	0501-311-843
N.I.	Solenoid, EPC (BMW V12)	1	91-Up	159431A	0501-210-875
N.I.	Solenoid, EPC (All)	4	91-Up	159431B	N.L.
N.I.	Sensor, Input & Output Speed	2	91-Up	69436A	0501-310-401
VALVE BODY RECALIBRATION KITS					
N.I.	Valve Body Kit	1	91-Up	159165	N.L.
PUMPS					
110A	Pump Body & Gears	1	91-Up	159510	1055-210-049
DRUMS & COMPONENTS					
134A	Drum, "A"/"C"	1	91-Up	159550A	1055-270-074
310C	Piston, "D" (Bonded)	1	91-Up	185963	N.L.
330C	Piston, "E1" (Bonded)	1	91-Up	185962	1058-375-020
618F	Piston, "F" (Bonded)	1	91-Up	185967	0501-212-967
662F	Drum, "F"	1	91-Up	159550F	1055-276-045
N.I.	Bonded Piston Kit	1	91-Up	159960K	1055-298-030
VALVE BODIES & GOVERNORS					
526E	Valve Body	1	91-Up	159740-1	N.L.

ILL.		Qty.	Year	Part #	Ref. #
MISCELLANEOUS COMPONENTS					
N.I.	Valve, Pressure Regulator	1	91-Up	159507P	1058-327-030
N.I.	Check Ball	1	91-Up	159741-5	1043-326-037
TECHNICAL MANUALS					
N.I.	Tech Manual, Repair	1	91-Up	159400A	N.L.
N.I.	Tech Manual, Functional	1	91-Up	159400AF	N.L.
N.I.	Tech Manual, Valve Body Repair	1	91-Up	159400V	N.L.

Notes

ILL.		Qty.	Year	Part #	Ref. #
MASTER OVERHAUL KITS (WITH STEELS)					
N.I.	RWD 6HP19)	1	02-Up	209006	N.L.
N.I.	AWD (6HP19A)	1	04-Up	209006A	N.L.
MASTER OVERHAUL KITS (LESS STEELS)					
N.I.	RWD (6HP19)	1	02-Up	209004	N.L.
N.I.	AWD (6HP19A)	1	04-Up	209004A	N.L.
OVERHAUL KITS (WITH RINGS AND SEALS)					
N.I.	RWD (6HP19)	1	02-Up	209002	N.L.
N.I.	AWD (6HP19A)	1	04-Up	209002A	N.L.
GASKETS & O-RINGS					
N.I.	6HP19 (Molded Rubber)	1	02-Up	209300	0501-323-156
N.I.	6HP19A	1	04-Up	209300A	N.L.
FRICTION PLATES					
N.I.	Friction Module (6HP19, 6HP19A)	1	02-Up	209119	1071-298-013
STEEL PLATES					
N.I.	Steel Module (6HP19)	1	02-Up	209139	1071-298-011
N.I.	Steel Module (6HP19A)	1	04-Up	209139A	1071-298-012
FILTERS					
N.I.	6HP19 (Plastic Integral Filter and Pan)	1	02-Up	209010	0501-216-244
N.I.	6HP19A	1	04-Up	209010A	0501-212-401

Notes

TK TOLEDO TRANS-KIT · SEAL AFTERMARKET PRODUCTS your source for engineered solutions · BRYCO · ProSELECT · RoadMaster

PRODUCT UPDATE

ZF6HP26 Bushing Kit

Seal Aftermarket Products has modified bushing kit # 31830G. Additional size bushings were added to to cover various 6HP26 shafts

31836GA
Bushing ZF6HP26 Forward Clutch Hub (28mm) 2006-Up
NEW

31837G
Bushing ZF6HP26 Direct Drum 2006-Up

31836G
Bushing ZF6HP26 Forward Clutch Hub (27mm) 2006-Up

31833G
Bushing ZF6HP26 Forward Clutch Drum Front (Large) 2006-Up



31832GA
Bushing ZF6HP26 Stator Bottom (Rear) 2006-Up

31832GB
Bushing ZF6HP26 Stator Bottom Rear (33mm) 2006-Up
NEW

31835G
Bushing ZF6HP26 Output Shaft & Overdrive Clutch Drum 2006-Up

31836G
Bushing ZF6HP26 Forward Clutch Hub (27mm) 2006-Up

31834G
Bushing ZF6HP26 Forward Clutch Drum Rear (Small) 2006-Up

• **49030D -** Bushing Kit 6R60 2006-Up (*Also Available)*

Release Date 6/4/2014

Sales Policy: All shipments are FCA Pembroke Park. Price and Availability subject to change

B00015

© 2014 Seal Aftermarket Products LLC. ALL RIGHTS RESERVED. Possession of price list does not constitute offer to sell
Disclaimer - All information has been checked for accuracy, however no liability can be assumed for errors and omissions

Seal Aftermarket Products LLC · 2315 SW 32nd Avenue · Pembroke Park FL 33023 · [P] (800) 582-2760 · [F] 954-364-2401 · www.sealaftermarketproducts.com

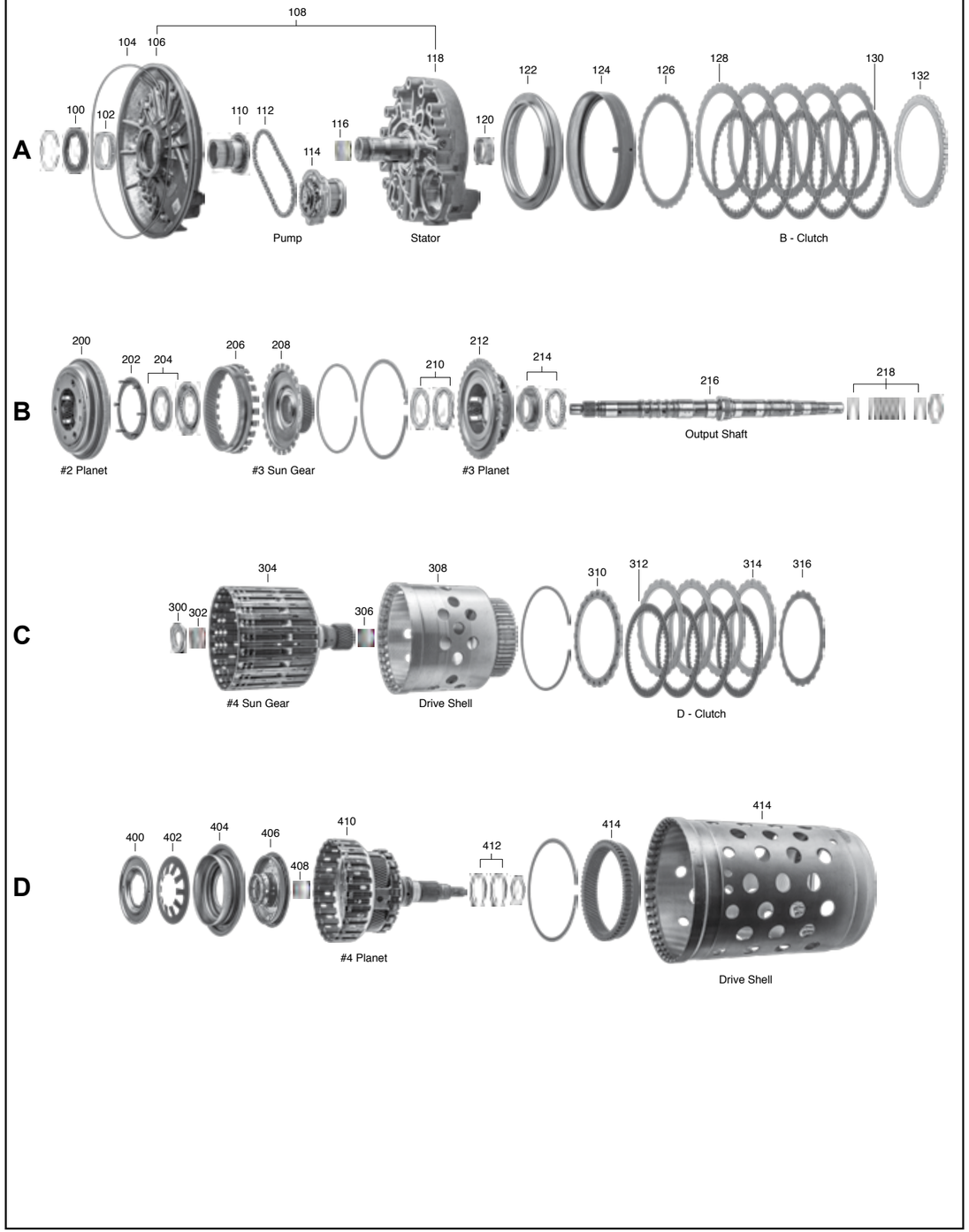
A
100
102
104
106
108
110
112
114
116
118
120
122
124
126
128
130
132
Pump
Stator
B - Clutch
B
200
202
204
206
208
210
212
214
216
218
#2 Planet
#3 Sun Gear
#3 Planet
Output Shaft
C
300
302
304
306
308
310
312
314
316
#4 Sun Gear
Drive Shell
D - Clutch
D
400
402
404
406
408
410
412
414
#4 Planet
Drive Shell

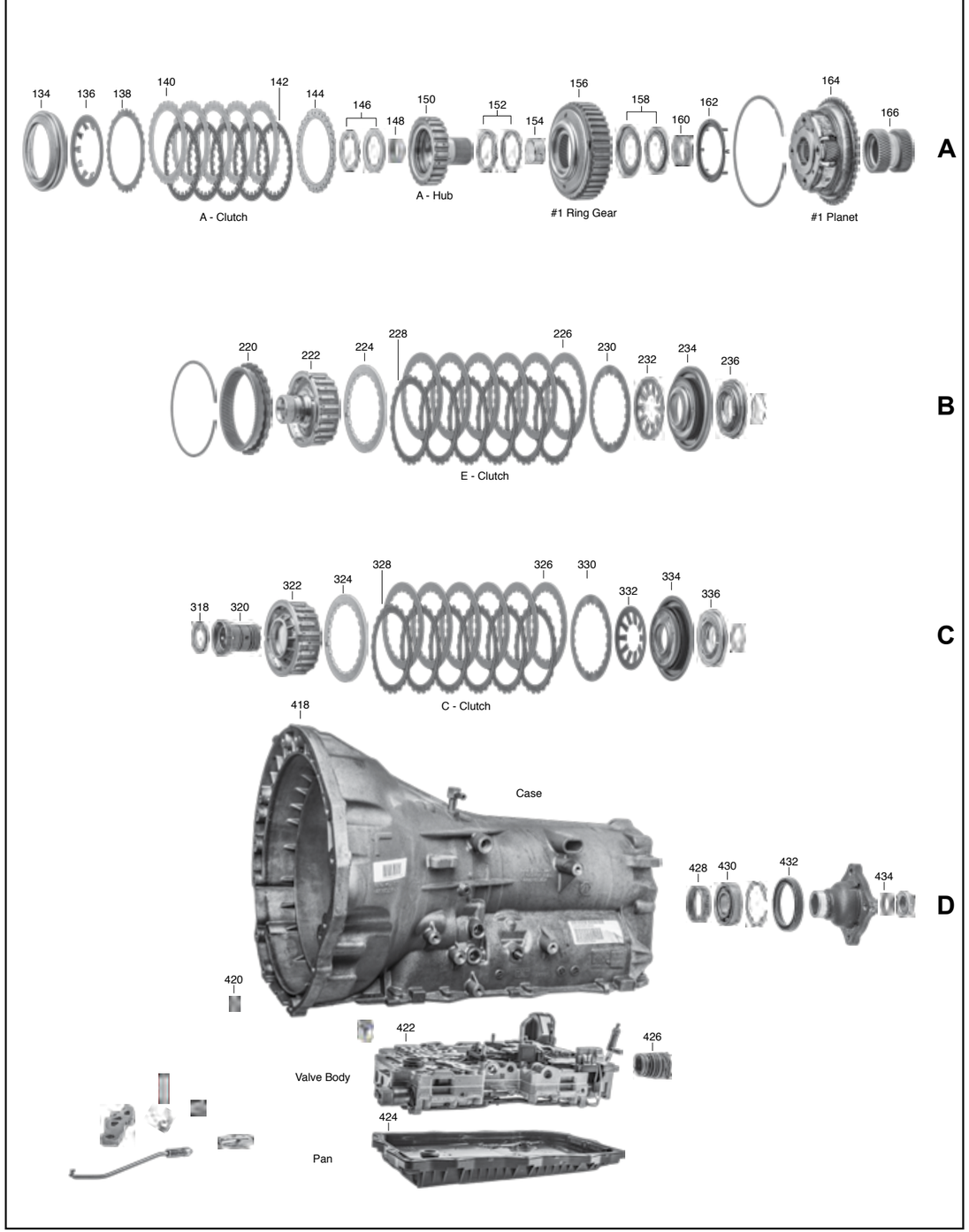
A
134
136
138
140
142
144
146
148
150
152
154
156
158
160
162
164
166
A - Clutch
A - Hub
#1 Ring Gear
#1 Planet
B
220
222
224
226
228
230
232
234
236
E - Clutch
C
318
320
322
324
326
328
330
332
334
336
C - Clutch
D
418
Case
420
422
426
Valve Body
424
Pan
428
430
432
434

ILL.		Qty.	Year	Part #	Ref. #
MASTER OVERHAUL KITS (WITH STEELS)					
N.I.	ZF8HP45	1	09-Up	319006A	N.L.
MASTER OVERHAUL KITS (LESS STEELS)					
N.I.	ZF8HP45	1	09-Up	319004A	N.L.
OVERHAUL KITS (WITH RINGS AND SEALS)					
N.I.	ZF8HP45	1	09-Up	319002A	N.L.
BONDED PISTONS					
124A	Retainer B Brake (Bonded)	1	09-Up	319985A	N.L.
234B	Piston E Clutch (Bonded)	1	09-Up	319960A	N.L.
334C	Piston C Clutch (Bonded)	1	09-Up	319962A	N.L.
406D	Piston Seal D Clutch (Bonded)	1	09-Up	319966A	N.L.
N.I.	Piston Kit (Bonded)	1	09-Up	319960K	N.L.
GASKETS & O-RINGS					
104A	O-Ring, Pump Cover	1	09-Up	319311A	N.L.
N.I.	Pan Gasket, Rubber	1	09-Up	319300A	N.L.
METAL CLAD SEALS					
100A	Front Pump	1	09-Up	319070A	N.L.
420D	Manual Shaft	1	09-Up	319072A	N.L.
432D	Extension Housing (2WD)	1	09-Up	319074A	N.L.
434D	Output Flange	1	09-Up	319081A	N.L.
SEALING RINGS & KITS					
218B	Input (Plastic)	7	09-Up	319177A	N.L.
412D	Output	2	09-Up	319180A	N.L.
FRICTION PLATES					
130A	B Clutch	5	09-Up	319106A	N.L.
142A	A Clutch	5	09-Up	319108A	N.L.
228B	E Clutch (External Teeth)	6	09-Up	319104A	N.L.
312C	D Clutch	4	09-Up	319114A	N.L.
328C	C Clutch (External Teeth)	6	09-Up	319104A	N.L.
STEEL PLATES					
128A	B Clutch	5	09-Up	319126A	N.L.
140A	A Clutch	5	09-Up	319128A	N.L.
226B	E Clutch (Internal Teeth)	6	09-Up	319124A	N.L.
314C	D Clutch	4	09-Up	319134A	N.L.
326C	C Clutch (Internal Teeth)	6	09-Up	319124A	N.L.
PRESSURE PLATES					
132A	B Clutch	1	09-Up	319146A	N.L.
144A	A Clutch	1	09-Up	319148A	N.L.
224B	E Clutch (Internal Teeth)	1	09-Up	319144A	N.L.
310C	D Clutch	1	09-Up	319154A	N.L.
324C	C Clutch (Internal Teeth)	1	09-Up	319144A	N.L.
FILTERS					
424D	Filter W/Pan	1	09-Up	319010A	N.L.
BUSHINGS					
116A	Stator (Front)	1	09-Up	319036A	N.L.
148A	A Clutch Hub (Front)	1	09-Up	319048A	N.L.
154A	A Clutch Hub (Rear)	1	09-Up	319049A	N.L.
160A	#1 Planet	1	09-Up	319042A	N.L.
302C	#4 Sun Gear (Front)	1	09-Up	319037A	N.L.
306C	#4 Sun Gear (Rear)	1	09-Up	319038A	N.L.
408D	#4 Planet	1	09-Up	319053A	N.L.
THRUST WASHERS/BEARINGS					
WASHERS					
N.I.	Shim, Output Flange	AR	09-Up	319273A	N.L.

ILL.		Qty.	Year	Part #	Ref. #
BEARINGS					
146A	A Clutch Hub (Front) Bearing	1	09-Up	319216K	N.L.
146A	A Clutch Hub (Front) Race	1	09-Up	319216K	N.L.
152A	A Clutch Hub (Rear) Bearing	1	09-Up	319218K	N.L.
152A	A Clutch Hub (Rear) Race	1	09-Up	319218K	N.L.
158A	#1 Planet (Front) Race	1	09-Up	319222K	N.L.
158A	#1 Planet (Front) Bearing w/ Race	1	09-Up	319222K	N.L.
204B	#2 Planet (Front) Race	1	09-Up	319224K	N.L.
204B	#2 Planet (Front) Bearing w/ Race	1	09-Up	319224K	N.L.
210B	#3 Planet (Front) Race	1	09-Up	319226K	N.L.
210B	#3 Planet (Front) Bearing w/ Race	1	09-Up	319226K	N.L.
214B	#3 Planet (Rear) Race	1	09-Up	319228K	N.L.
214B	#3 Planet (Rear) Bearing w/ Race	1	09-Up	319228K	N.L.
300C	#4 Sun Gear Shell Bearing	1	09-Up	319230A	N.L.
318C	C Clutch Hub Bearing	1	09-Up	319220A	N.L.
ELECTRICAL COMPONENTS					
426D	Harness, Case Connector	1	09-Up	319446A	N.L.
N.I.	Solenoid, White Connector	4	09-Up	319420A	N.L.
N.I.	Solenoid, Orange Connector	3	09-Up	319421A	N.L.
N.I.	Solenoid, Black Connector	1	09-Up	319423A	N.L.
N.I.	Solenoid, Green Connector	1	09-Up	319425A	N.L.
PUMPS					
106A	Plate, Pump (Front)	1	09-Up	319544A	N.L.
108A	Pump, Remote (Off Axis) W / Stator Support	1	09-Up	319500AK	N.L.
114A	Pump, Remote (Off Axis)	1	09-Up	319500A	N.L.
118A	Stator	1	09-Up	319510A	N.L.
DRUMS & COMPONENTS					
122A	Piston B Brake	1	09-Up	319965A	N.L.
124A	Retainer B Brake (Bonded)	1	09-Up	319985A	N.L.
134A	Piston A Brake	1	09-Up	319964A	N.L.
136A	Spring Piston Return A Brake	1	09-Up	319974A	N.L.
150A	Hub A Clutch	1	09-Up	319570A	N.L.
222B	Hub E Clutch (Drum)	1	09-Up	319576A	N.L.
232B	Spring Piston Return E Clutch	1	09-Up	319970A	N.L.
234B	Piston E Clutch (Bonded)	1	09-Up	319960A	N.L.
236B	Retainer E Clutch	1	09-Up	319980A	N.L.
322C	Hub C Clutch (Drum)	1	09-Up	319574A	N.L.
332C	Spring Piston Return C Clutch	1	09-Up	319972A	N.L.
334C	Piston C Clutch (Bonded)	1	09-Up	319962A	N.L.
336C	Retainer C Clutch	1	09-Up	319982A	N.L.
400D	Retainer D Clutch	1	09-Up	319987A	N.L.
402D	Spring Piston Return D Clutch	1	09-Up	319977A	N.L.
404D	Piston D Clutch	1	09-Up	319967A	N.L.
406D	Piston Seal D Clutch (Bonded)	1	09-Up	319966A	N.L.
PLANETS AND COMPONENTS					
156A	Ring Gear, #1 (w/ Hub)	1	09-Up	319590A	N.L.
164A	Planet, #1 (4 Gear)	1	09-Up	319580A	N.L.
200B	Planet, #2 (3 Gear)	1	09-Up	319582A	N.L.
206B	Ring Gear, #2	1	09-Up	319592A	N.L.
212B	Planet, #3 (3 Gear) (Aluminum)	1	09-Up	319584A	N.L.
220B	Ring Gear, #3	1	09-Up	319594A	N.L.
410D	Planet, #4 (4 Gear) (w/ D Clutch)	1	09-Up	319586A	N.L.
414D	Ring Gear, #4	1	09-Up	319596A	N.L.
SUN GEARS					
166A	#1 & #2 (Common)	1	09-Up	319610A	N.L.
208B	#3 (w/ Flange)	1	09-Up	319612A	N.L.
304C	#4 (w/ Shell)	1	09-Up	319614A	N.L.
SHELLS & SUPPORTS					
308C	Driving Shell (Short)	1	09-Up	319624A	N.L.
320C	Support Sleeve, C Clutch	1	09-Up	319685A	N.L.
416D	Driving Shell (Long)	1	09-Up	319626A	N.L.

ILL.		Qty.	Year	Part #	Ref. #
SHAFTS					
216B	Output	1	09-Up	319670A	N.L.
VALVE BODIES & GOVERNORS					
422D	Valve Body w/TCM	1	09-Up	319740	N.L.
CHAINS AND SPROCKETS					
110A	Sprocket, Pump Drive	1	09-Up	319805A	N.L.
112A	Chain, Pump Drive	1	09-Up	319700A	N.L.
CASES/HOUSINGS & COMPONENTS					
418D	Main Case	1	09-Up	319760A	N.L.
424D	Pan w/ Filter (Plastic)	1	09-Up	319010A	N.L.
MISCELLANEOUS COMPONENTS					
102A	Pump Plate Bearing (Caged)	1	09-Up	319244A	N.L.
120A	Stator Plate Bearing (Caged)	1	09-Up	319246A	N.L.
126A	Cushion, B Clutch	1	09-Up	319852A	N.L.
138A	Cushion, A Clutch	1	09-Up	319851A	N.L.
162A	Oil Dam, #1 Planet	1	09-Up	319699A	N.L.
202B	Oil Dam, #2 Planet	1	09-Up	319699B	N.L.
230B	Cushion, E Clutch (Internal Teeth)	1	09-Up	319853A	N.L.
316C	Cushion, D Clutch	1	09-Up	319855A	N.L.
330C	Cushion, C Clutch (Internal Teeth)	1	09-Up	319853A	N.L.
428D	Case Bearing (Caged)	1	09-Up	319248A	N.L.
430D	Output Ball Bearing	1	09-Up	319271A	N.L.
434D	Nut Output Shaft	1	09-Up	319798A	N.L.

Notes

TK TOLEDO TRANS-KIT · SEAL AFTERMARKET PRODUCTS your source for engineered solutions · BRYCO · ProSELECT · RoadMaster

PRODUCT ANNOUNCEMENT

ZF8HP45X 2010-Up

Seal Aftermarket Products now has the Overhaul Kit for the ZF8HP45 series covering 2010-Up.
Please call your Sales Representative for pricing and availability

Innovative Engineered Solutions

- Includes Molded Rubber Pan Gasket
- Valve Body Screen Filters
- AWD Metal Clad Seal



Vehicle Coverage

Chrysler / Dodge
Audi
BMW
Jaguar
Land Rover
VW

Rebuild Kits

Available 9/5/2014
T319002A - Overhaul Kit ZF8HP45X 2010-Up



Components



70569
Seal ZF8HP45 Pump Vane 2010-Up



31875312
Bumper Seal ZF8HP45 Solenoid Damper 2010-Up



31965153
Screen Filter ZF8HP45 Valve Body 2010-Up



31865123
Screen Filter ZF8H45 Valve Body (Rectangular) 2010-Up

Release Date 9/2/2014

Sales Policy: All shipments are FCA Pembroke Park. Price and Availability subject to change

B00020

© 2014 Seal Aftermarket Products LLC. ALL RIGHTS RESERVED. Possession of price list does not constitute offer to sell
Disclaimer - All information has been checked for accuracy, however no liability can be assumed for errors and omissions

Seal Aftermarket Products LLC · 2315 SW 32nd Avenue · Pembroke Park FL 33023 · [P] (800) 582-2760 · [F] 954-364-2401 · www.sealaftermarketproducts.com

SEAL AFTERMARKET PRODUCTS™

"More Profits for Shops".....



Transmission Repair Parts
Repuesto para la reparación de transmisión automática
自动变速箱修理包

Bushings
Bujes- Bocinas
衬套





Bonded Pistons
Pistones vulcanizados
在发动机活塞

Solenoid- Electronics
Solenoides-Electrónicos
电磁阀

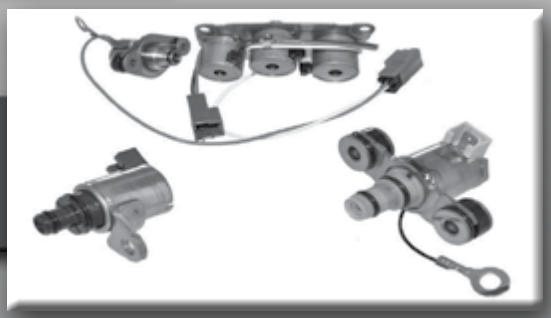



Bands
Cinchos- Bandas
刹车带

your source for engineered solutions

Seal Aftermarket Products LLC
2315 S.W. 32 Ave., Pembroke Park, FL 33023
Phone 954-364-2400 • Toll Free 800-582-2760 • Fax 954-364-2401
www.sealaftermarketproducts.com

TK TOLEDO TRANS-KIT

BRYCO