Table of Contents

Important Notice	ii
Limited Warranty	iii
New Part Number Listing	iv
Vehicle Identification Chart	v
Metric Conversion Tables	v
Abbreviations Used in Catalog	vi

Clutch Applications

Acura	1
Alfa Romeo	1
American Motors	2
Asuna (Canada Only)	3
Audi	3
BMW	6
BMW Light Truck	10
Buick	11
Cadillac	12
Checker	12
Chevrolet	13
Chevrolet Light Truck	20
Chevrolet Medium Truck	33
Chrysler	34
Daewoo	35
Daihatsu	36
Dodge	36
Dodge Light Truck	40
Eagle	47
Fiat	47
Ford	48
Ford Light Truck	53
Ford Medium Truck	62
Geo	64
GMC Light Truck	64
GMC Medium Truck	75
Hino Medium Truck	77
Honda	77
Honda Light Truck	79
Hummer	79
Hyundai	79
Hyundai Light Truck	81
Infiniti	81
International Light Truck	81
Isuzu	82
Isuzu Light Truck	82
Isuzu Medium Truck	83
Jaguar	84
Jeep	84
Kia	87
Kia Light Truck	88
Lamborghini	88
Land Rover	88
Lexus	89
Lincoln	89
MG	89
Mazda	89
Mazda Light Truck & Van	92
Mercedes Benz	93
Mercury	96
Merkur	98
Mini	98
Mitsubishi	99
Mitsubishi Light Truck & Van	100
Nissan / Datsun	101
Nissan Light Truck & Van	104
Nissan Medium Truck	105
Oldsmobile	106
Opel	109
Peugeot	109
Plymouth	110
Plymouth Light Truck	116
Pontiac	116
Porsche	123
RAM Light Truck	125
Renault	125
Saab	125
Saturn	127
Saturn Light Truck	127
Scion	128
Scion Light Truck	128
Smart	128
Sterling	128
Subaru	128
Subaru Light Truck	131
Suzuki	131
Suzuki Light Truck	132
Toyota	132
Toyota Light Truck & Van	135
Triumph	137
Volkswagen	137
Volkswagen Light Truck & Van	143
Volvo	143
Volvo Truck	146

Clutch Forks	147
Industrial Section	150

Buyers Guides

Clutch Kits	156
Clutch Components	167
Clutch Forks	167
Flywheels	168
Master Cylinders	171
Slave Cylinders	175
Concentric Slave Cylinders	178
Pre-Filled Hydraulics	179

Applications Notes	180
Technical Bulletins	181
General Installation Procedures	193
Checking the Installed Clutch	196
Hydraulic Bleed Procedures	197
Trouble Shooting Guide	198
Technical Hotline	Back Cover

© 2014 ZF North American Operations, Inc. All Rights Reserved. No portion of this work may be reproduced or copied by any means without the prior approval of ZF North American Operations, Inc.

Important Notice

The purpose of this catalog is to furnish ZF Services, LLC (“ZF”) customers with as complete a listing of their parts requirements as possible.

All listings, applications, and interchanges have been compiled as carefully as possible with all available information, however, ZF cannot assume any responsibility for possible errors in listings, applications, or interchanges.

All references by ZF to the original manufacturer trade names and part numbers are for identification purposes only.

This catalog supersedes all previous catalogs and listings.

Part numbers for the new Sachs Super Clutch kits are listed in this catalog. These kits cover the majority of popular passenger car and light truck applications. Each kit contains a new clutch pressure plate assembly, clutch driven plate, and clutch releaser. In addition to the three main components of our clutch kits, ZF has added an alignment tool, pilot bushing (if applicable) and spline lube. Our kits are designed to assist the installer achieve a thorough clutch replacement. We highly recommend that in addition to replacing the clutch components contained in the Super Set kit, the release fork, pivot ball stud, and clutch cable be replaced with every new clutch installation. The flywheel must also be replaced or resurfaced prior to installation of a new clutch assembly. All clutch actuating system components and oil seals exhibiting signs of wear should be replaced as well.

© 2014 ZF North American Operations, Inc. All Rights Reserved. No portion of this work may be reproduced or copied by any means without the prior approval of ZF North American Operations, Inc.

Who is covered:

You are eligible for the benefits of this warranty if you are the original retail purchaser of a Sachs Clutch Kit or clutch product, still own the vehicle on which the Sachs Clutch Kit or product was installed and Sachs continues to offer the warranted product in its program.

What is covered and for how long:

ZF Services, LLC ("ZF") warrants its clutch products to be free from defects in materials and workmanship under normal use and service as hereinafter provided, for twelve months (1 year) after installation in a vehicle.

What is NOT covered:

This warranty does not cover any Sachs product that has been:

1. Supplied for high-performance purposes
2. Modified, altered or subjected to abuse, negligence or accident
3. Installed on a vehicle that was then involved in an accident
4. Improperly installed or installed on any vehicle for which it was not designed
5. Installed on any vehicle which has been modified
6. Installed on any vehicle which has been used commercially or for rallying, racing or off-road use
7. Used on a vehicle other than the one on which it was originally installed
8. Presented for warranty coverage due to improper servicing, normal wear and tear or abuse
9. Presented for warranty coverage by one other than the original purchaser

Any implied warranties, including warranties of merchantability and fitness for a particular purpose shall be limited in duration to the period of the time set forth above. ZF shall not be responsible for incidental or consequential damages and its liability shall be limited to the amount paid for the product. Some states do not allow limitations on how long an implied warranty lasts or the exclusion or limitation of incidental or consequential damages, so the above limitations or exclusion may not apply to you.

What ZF Services will do:

ZF's obligation under this warranty is limited to providing, at no charge, a replacement for any part of such clutch product that fails within the terms of this warranty. ZF will not be responsible for the cost of labor related to the installation of the replacement part. ZF Services will replace any defective or worn-out Sachs Clutch Kit or product covered by this warranty with a new one. ZF Services will neither remove nor install, and will not pay for the removal, shipping or installation of any Sachs product under this warranty.

What you must do:

n order to obtain warranty service, the entire clutch assembly, including, the clutch cover assembly, the clutch driven disc, the pilot bushing, if applicable, and the releaser along with proof of flywheel resurfacing or flywheel replacement, must be returned to an authorized ZF distributor, with proof of purchase, work order, full particulars as to the type of use, application, and length of service of the failed part. Additional information or assistance regarding warranty claims may be obtained by writing to: ZF Services, LLC, 777 Hickory Hill Drive , Vernon Hills, IL 60061, ATTN: Technical Support Department.

This is the only express warranty applicable to products offered in the Sachs Clutch Program. ZF Services neither assumes nor authorizes anyone to assume for it any other express warranty. This warranty gives you specific legal rights, and you may also have other rights which vary state to state.

© 2014 ZF North American Operations, Inc. All Rights Reserved. No portion of this work may be reproduced or copied by any means without the prior approval of ZF North American Operations, Inc.

New Part Numbers

Clutch Kits

K70131-01	K70486-01	K70628-01	K70652-01
K70154-04	K70526-02	K70629-01	K70657-01
K70185-01	K70531-02	K70630-01	K70658-01
K70185-02	K70531-03	K70631-01	K70687-01
K70267-02	K70555-02	K70633-01	K70687-01CB
K70284-05	K70560-01	K70634-01	K70687-01HD
K70344-01	K70561-01	K70635-01	K70713-01
K70381-01	K70620-01	K70638-02F	K70771-01F
K70415-01F	K70620-02	K70639-01	K70812-01
K70422-03	K70621-01	K70640-01	K70813-01
K70422-03F	K70622-01	K70641-01	KF652-03
K70422-04F	K70623-01	K70642-01	KF696-01F
K70448-01	K70624-01	K70644-01	PC70131-01
K70449-01	K70625-01	K70645-01	SK70405-1
K70450-01	K70626-01	K70648-01	
K70485-02	K70627-01	K70651-01	

Flywheels

DMF91173	DMF91182	NFW9129	NFW9138
DMF91175	DMF91183	NFW9130	NFW9140
DMF91177	DMF91184	NFW9131	NFW9146
DMF91178	DMF91185	NFW9132	NFW9150
DMF91179	DMF91186	NFW9133	
DMF91180	NFW1125	NFW9136	
DMF91181	NFW9128	NFW9137	

Master Cylinders

SH5518	SH5530	SH5535	SH5549
SH5526	SH5531	SH5538	SH5550
SH5527	SH5532	SH5539	SH5551
SH5528	SH5533	SH5544	
SH5529	SH5534	SH5546	

Slave Cylinders

SH6513	SH6519	SH6525	SH6529
SH6518	SH6520	SH6526	

Concentric Slave Cylinders

SB60203	SB60312	SB60316	SB60323
SB60255	SB60313	SB60317	SH6163
SB60300	SB60314	SB60319	SH6163WB
SB60308	SB60315	SB60322	

© 2014 ZF North American Operations, Inc. All Rights Reserved. No portion of this work may be reproduced or copied by any means without the prior approval of ZF North American Operations, Inc.

Vehicle Identification Chart

8th digit of the VIN indicates engine code
(This identifier will vary by manufacturer.)

10th digit of the VIN indicates year
(This applies to all manufacturers, both foreign and domestic for all cars sold in the US.)

A =	1980	G =	1986	N =	1992	W =	1998	4 =	2004	A =	2010
B =	1981	H =	1987	P =	1993	X =	1999	5 =	2005	B =	2011
C =	1982	J =	1988	R =	1994	Y =	2000	6 =	2006	C =	2012
D =	1983	K =	1989	S =	1995	1 =	2001	7 =	2007	D =	2013
E =	1984	L =	1990	T =	1996	2 =	2002	8 =	2008	E =	2014
F =	1985	M =	1991	V =	1997	3 =	2003	9 =	2009		

Metric Conversion Tables

Inches	to	Millimeters	Multiply inches by 25.4
Millimeters	to	Inches	Divide millimeters by 25.4
Cubic Inches	to	Cubic Centimeters	Multiply cubic inches by 16.4
Cubic Centimeters	to	Cubic Inches	Divide cubic centimeters by 16.4
Liters	to	Cubic Centimeters	Multiply liters by 1000
Cubic Centimeters	to	Liters	Divide cubic centimeters by 1000

Inches		mm	Inches		mm	Inches		mm	Inches		mm
6 1/4”	.....	160mm	8 1/2”	.....	215mm	9 11/16”	.....	246mm	11 3/4”	.....	300mm
6 3/4”	.....	170mm	8 5/8”	.....	219mm	9 3/4”	.....	247mm	12”	.....	305mm
7”	.....	178mm	8 3/4”	.....	222mm	9 7/8”	.....	250mm	12 1/4”	.....	310mm
7 1/8”	.....	180mm	8 7/8”	.....	225mm	10”	.....	254mm	12 3/4”	.....	325mm
7 1/4”	.....	185mm	9”	.....	228mm	10 1/4”	.....	260mm	13”	.....	330mm
7 1/2”	.....	190mm	9 1/8”	.....	230mm	10 3/8”	.....	265mm	13 3/4”	.....	350mm
7 3/4”	.....	197mm	9 1/6”	.....	232mm	10 1/2”	.....	267mm	14”	.....	355mm
7 7/8”	.....	200mm	9 1/4”	.....	235mm	10 3/4”	.....	273mm	15”	.....	380mm
8”	.....	203mm	9 5/16”	.....	236mm	10 13/16”	.....	275mm	16 1/2”	.....	420mm
8 1/4”	.....	210mm	9 7/16”	.....	240mm	11”	.....	280mm	17”	.....	430mm
8 3/8”	.....	212mm	9 1/2”	.....	242mm	11 1/2”	.....	295mm			

© 2014 ZF North American Operations, Inc. All Rights Reserved. No portion of this work may be reproduced or copied by any means without the prior approval of ZF North American Operations, Inc.

Abbreviations Used in Catalog

1bbl.	One Barrel Carburetor
2bbl.	Two Barrel Carburetor
4bbl.	Four Barrel Carburetor
2WD	Two Wheel Drive
4WD	Four Wheel Drive
3 Spd.	Three Speed Transmission
4 Spd.	Four Speed Transmission
5 Spd.	Five Speed Transmission
6 Spd.	Six Speed Transmission
AC	Air Conditioning
AfterMKT	Aftermarket
AMC	American Motors Corporation
assy.	Assembly
carb.	Carburetor
CB	Ceramic Button
cc	Cubic Centimeter
ch. #	Chassis Number
Chry.	Chrysler
cyl.	Cylinder
DF	Dual Friction
DFC	Dual Friction with Cable
diaph.	Diaphragm
dia.	Diameter
dir.	Direct
DMF	Dual Mass Flywheel
DOHC	Double Overhead Camshaft
dr.	door
dwl.	Dowel
EFI	Electronic Fuel Injection
eng.	Engine
exc.	Except
Ext.	External
ƒ	Kit includes Flywheel
F & S	Fichtel & Sachs
fr.	from
FWD	Front Wheel Drive
GM	General Motors
GVW	Gross Vehicle Weight Rating
HD	Heavy Duty
HO	High Output
incl.	Including
I.D.	inside diameter
IDI	Indirect Injection
IND	Industrial
inj.	Injection
interm.	Intermediate
KC	Kit with Cable
KL	Kevlar®
L	Liter
lbs.	Pounds
MB	Metallic Button
mm	Millimeters
MFI	Multiport Fuel Injection
MPI	Multiport Injection
mod.	Modular
NR	Not Required
OD	Overdrive
OE	Original Equipment
OHC	Overhead Camshaft
OHV	Overhead Valve
Orig.	Original
Pass.	Passenger
p/n	Part Number
R	Rotary Engine
rel.	Release/Releaser
req'd	Required
ret.	Retaining
RWD	Rear Wheel Drive
Š	Kit includes Slave Cylinder
SHO	Super High Output
SOHC	Single Overhead Camshaft
Spec.	Special
spd.	Speed
Std.	Standard
trans.	Transmission
VIN	Vehicle Identification Number
w/	With
w/o	Without
*	Not Available
Ø	Components Available

© 2014 ZF North American Operations, Inc. All Rights Reserved. No portion of this work may be reproduced or copied by any means without the prior approval of ZF North American Operations, Inc.

CLUTCH KIT

Cyl.	CC Cubic Inch	Liter	Year	Application Information	Clutch Kit	Notes Pg.180	Disc Size O.D.	Disc Size I.D.	Disc Size Teeth	PreFilled Master Or System	Master Cylinder	Slave Cylinder	Flywheel
ACURA													
CL													
4	2156cc	2.2	97		KF701-01		8 7/8	1 1/32	24T	*	SH5027	SH6021	NFW3607
	2254cc	2.3	99-98		KF701-01		8 7/8	1 1/32	24T	*	SH5027	SH6021	NFW3607
6	3210cc	3.2	03	S	K70352-01 ◎		9 1/2	1	24T	*	*	*	*
EL (CANADA ONLY)													
4	1590cc	1.6	00-97		KF702-03		8 3/8	7/8	20T	*	SH5036	SH6035	NFW3611
	1668cc	1.7	05-01		KF702-03		8 3/8	7/8	20T	*	SH5223	SH6185	*
INTEGRA													
4	1590cc	1.6	89-86		KF615-01		7 7/8	27/32	21T	*	*	*	NFW2102
	1678cc	1.7	93-92		K70073-01		8 5/8	1 1/32	24T	*	*	*	NFW2100
	1797cc	1.8	01-94	GSR & Type-R	K70073-02		8 5/8	1 1/32	24T	*	SH5036	SH6035	*
				Optional Kit/HD Disc	K70073-02HD		8 5/8	1 1/32	24T	*	SH5036	SH6035	*
	1834cc	1.8	01-94	exc. GSR & Type-R	K70073-02		8 5/8	1 1/32	24T	*	SH5036	SH6035	NFW2108
				Optional Kit/HD Disc	K70073-02HD		8 5/8	1 1/32	24T	*	SH5036	SH6035	NFW2108
			93-92		K70073-01		8 5/8	1 1/32	24T	*	*	*	*
			91-90		K70073-04		8 3/4	1	24T	*	*	*	NFW2100
LEGEND													
6	2494cc	2.5	87	Coupe	KF641-01		8 7/8	31/32	24T	*	SH5112	SH6107	*
			87-86	Sedan	KF641-01		8 7/8	31/32	24T	*	SH5112	*	*
	2675cc	2.7	90-89		KF641-01		8 7/8	31/32	24T	*	SH5112	*	*
			88-87		KF641-01		8 7/8	31/32	24T	*	SH5112	SH6107	*
	3206cc	3.2	95-94	6 Spd.	K70099-01 ◎		9 1/2	1 1/32	24T	*	*	SH6110	*
			95-91	5 Spd.	KF791-01		9 1/2	1 1/32	24T	*	*	SH6110	*
RSX													
4	1998cc	2.0	06	6 Spd., Type-S	K70346-01		8 1/2	1 1/8	24T	*	SH5199	*	*
			06-02	5 Spd.	K70345-01		8 1/2	1 1/8	24T	*	SH5199	SH6167	*
			05-02	6 Spd., S	K70346-01		8 1/2	1 1/8	24T	*	SH5199	SH6167	*
TL													
6	3210cc	3.2	06-04		K70352-01 ◎	60	9 1/2	1	24T	*	SH5199	*	DMF91150
	3471cc	3.5	08-07		K70352-01 ◎		9 1/2	1	24T	*	SH5199	*	*
	3664cc	3.7	11-10		*					*	SH5489	*	*
TSX													
4	2354cc	2.4	14-09		K70618-01 ◎		8 7/8	1	24T	*	SH5489	SH6513	NFW9135
			08-04		K70381-01 ƒ◎		8 7/8	1	24T	*	SH5199	SH6167	*
ALFA ROMEO													
ALFA 164													
6	2959cc	3.0	95-94	Q	K70135-01 ◎		9	29/32	20T	*	*	*	*
ALFETTA													
4	1961cc	2.0	77-75		KF644-01 ◎		8 1/2	7/8	19T	*	*	*	*
BERLINA													
4	1779cc	1.8	71-69		KF026-01 ◎		8 1/2	1	10T	*	*	*	*
	1961cc	2.0	74-70		KF026-01 ◎		8 1/2	1	10T	*	*	*	*
DUETTO 1600													
4	1570cc	1.6	67		KF024-01	2	7 7/8	1	10T	*	*	*	*
GIULIA													
4	1570cc	1.6	67		KF024-01	2	7 7/8	1	10T	*	*	*	*

◎ Kit Only

* Not Available
Ø Components Available
Š Kit Includes Concentric Slave Cylinder
ƒ Kit Includes Flywheel

© 2014 ZF North American Operations, Inc. All Rights Reserved. No portion of this work may be reproduced or copied by any means without the prior approval of ZF North American Operations, Inc.

SACHS

CLUTCH KIT

Cyl.	CC Cubic Inch	Liter	Year	Application Information	Clutch Kit	Notes Pg.180	Disc Size O.D.	Disc Size I.D.	Disc Size Teeth	PreFilled Master Or System	Master Cylinder	Slave Cylinder	Flywheel
ALFA ROMEO (Cont'd)													
GIULIA SPRINT													
4	1570cc	1.6	67		KF024-01	2	7 7/8	1	10T	*	*	*	*
GT VELOCE													
4	1779cc	1.8	71-69		KF026-01 ◎		8 1/2	1	10T	*	*	*	*
	1961cc	2.0	74-72		KF026-01 ◎		8 1/2	1	10T	*	*	*	*
GTV													
4	1570cc	1.6	67		KF024-01	2	7 7/8	1	10T	*	*	*	*
SPIDER													
4	1779cc	1.8	71-69		KF026-01 ◎		8 1/2	1	10T	*	*	*	*
	1961cc	2.0	94-70		KF026-01 ◎		8 1/2	1	10T	*	*	*	*
AMERICAN MOTORS													
AMBASSADOR													
8	287"	4.7	66		K1675-08		10 1/2	1 1/8	10T	*	*	*	*
	290"	4.8	68		K1675-08		10 1/2	1 1/8	10T	*	*	*	*
	327"	5.4	66	4 Spd.	K1675-08		10 1/2	1 1/8	10T	*	*	*	*
			63-60	4 Spd.	K1675-08		10 1/2	1 1/8	10T	*	*	*	*
			59-58		K1675-08		10 1/2	1 1/8	10T	*	*	*	*
	343"	5.6	68-67	4 Spd.	K1675-08		10 1/2	1 1/8	10T	*	*	*	*
	390"	6.4	68	4 Spd.	K1675-08		10 1/2	1 1/8	10T	*	*	*	*
AMERICAN													
8	290"	4.7	68-67		K1675-08		10 1/2	1 1/8	10T	*	*	*	*
AMX													
8	290"	4.8	69-68		K1675-08		10 1/2	1 1/8	10T	*	*	*	*
	343"	5.6	69-68		K1675-08		10 1/2	1 1/8	10T	*	*	*	*
	360"	5.9	70		K1675-08		10 1/2	1 1/8	10T	*	*	*	*
	390"	6.4	70-69		K1675-08		10 1/2	1 1/8	10T	*	*	*	*
CLASSIC													
8	287"	4.7	65-64		K1675-08		10 1/2	1 1/8	10T	*	*	*	*
	327"	5.3	66-65		K1675-08		10 1/2	1 1/8	10T	*	*	*	*
CONCORD													
4	151"	2.5	82-80		K1878-03		9 1/8	1 1/8	10T	*	*	*	*
EAGLE													
4	151"	2.5	83-81	GM eng.	K1878-03		9 1/8	1 1/8	10T	*	*	*	*
6	258"	4.2	88-81	(fr. eng. #011C03)	K1890-01		10 1/2	1 1/8	10T	*	*	SH6355	*
HORNET													
8	360"	5.9	72-71	4 Spd.	K1675-09		10 1/2	1 1/8	10T	*	*	*	*
JAVELIN													
8	343"	5.6	69-68	4 Spd.	K1675-08		10 1/2	1 1/8	10T	*	*	*	*
	360"	5.9	70	4 Spd.	K1675-09		10 1/2	1 1/8	10T	*	*	*	*
	390"	6.4	70-69	4 Spd., 4 bbl.	K1675-08		10 1/2	1 1/8	10T	*	*	*	*
MARLIN													
8	287"	4.7	66-65		K1675-08		10 1/2	1 1/8	10T	*	*	*	*
	290"	4.7	67		K1675-08		10 1/2	1 1/8	10T	*	*	*	*
	327"	5.3	66-65		K1675-08		10 1/2	1 1/8	10T	*	*	*	*
	343"	5.6	67	4 Spd.	K1675-08		10 1/2	1 1/8	10T	*	*	*	*

◎ Kit Only

* Not Available
Ø Components Available
Š Kit Includes Concentric Slave Cylinder
ƒ Kit Includes Flywheel

© 2014 ZF North American Operations, Inc. All Rights Reserved. No portion of this work may be reproduced or copied by any means without the prior approval of ZF North American Operations, Inc.

CLUTCH KIT

Cyl.	CC Cubic Inch	Liter	Year	Application Information	Clutch Kit	Notes Pg.180	Disc Size O.D.	Disc Size I.D.	Disc Size Teeth	PreFilled Master Or System	Master Cylinder	Slave Cylinder	Flywheel
AMERICAN MOTORS (Cont'd)													
RAMBLER													
8	390"	6.4	69		K1675-08		10 1/2	1 1/8	10T	*	*	*	*
REBEL													
8	290"	4.8	69-68		K1675-08		10 1/2	1 1/8	10T	*	*	*	*
	343"	5.6	69-68	4 Spd.	K1675-08		10 1/2	1 1/8	10T	*	*	*	*
	390"	6.4	70-69	4 Spd., 4 bbl.	K1675-08		10 1/2	1 1/8	10T	*	*	*	*
SPIRIT													
4	151"	2.5	82-80		K1878-03		9 1/8	1 1/8	10T	*	*	*	*
ASUNA (CANADA ONLY)													
GT													
4	1588cc	1.6	93		K0111-01		7 7/8	3/4	24T	*	*	*	*
SE													
4	1588cc	1.6	93		K0111-01		7 7/8	3/4	24T	*	*	*	*
SUNFIRE													
4	1788cc	1.8	93		K70047-01	27	8 7/8	1	14T	*	*	*	*
SUNRUNNER													
4	1588cc	1.6	93-92		K0107-03		8 1/2	7/8	20T	*	*	*	*
AUDI													
A3													
4	1984cc	2.0	13-08		K70485-02 Š◎	60	9 7/16	15/16	23T	*	SH5495	SB60126	DMF91158
			07-06		K70466-01 Š◎	60	9 7/16	15/16	23T	*	SH5495	SB60126	DMF91162
A4													
4	1781cc	1.8	05-04	(fr. Chassis/VIN 8E-4-270 001)	K70205-01 ◎	60	9	15/16	23T	*	SH5269	SH6325	DMF91115
				(fr. Chassis/VIN 8E-4-270 001) w/ Solid Flywheel	K70771-01F ◎		9	15/16	23T	*	SH5269	SH6325	*
			04-02	(to Chassis/VIN 8E-4-270 000)	K70205-01 ◎	60	9	15/16	23T	*	SH5269	SH6142	DMF91115
				(to Chassis/VIN 8E-4-270 000) w/ Solid Flywheel	K70771-01F ◎		9	15/16	23T	*	SH5269	SH6142	*
			01-97	(fr. ch. #8D-V-180 001)	K70205-01 ◎	60	9	15/16	23T	*	SH5161	SH6142	DMF91115
				(to ch. #8D-V-180 001), w/ Solid Flywheel	K70771-01F ◎		9	15/16	23T	*	SH5161	SH6142	*
			97	(to ch. #8D-V-180 000)	K70205-01 ◎	60	9	15/16	23T	*	SH5165	SH6141	DMF91115
				(to ch. #8D-V-180 000), w/ Solid Flywheel	K70771-01F ◎		9	15/16	23T	*	SH5165	SH6141	*
	1984cc	2.0	08-05		K70613-01 ◎		9 7/16	15/16	23T	*	SH5269	SH6325	*
6	2771cc	2.8	01-97	(fr. ch. #8D-V-180 001)	K70007-01 ◎	60	9 1/2	15/16	23T	*	SH5161	SH6142	DMF91119
			97-96	(to ch. #8D-V-180 000)	K70007-01 ◎	60	9 1/2	15/16	23T	*	SH5165	SH6141	DMF91119
	2976cc	3.0	05		K70350-01 ◎		9 7/16	7/8	23T	*	SH5269	*	*
			04-02		K70350-01 ◎		9 7/16	7/8	23T	*	SH5269	SH6142	*
A4 QUATTRO													
4	1781cc	1.8	05-04	6 Spd.(fr. Chassis/VIN 8E-4-270 001)	K70205-01 ◎	60	9	15/16	23T	*	SH5269	SH6325	DMF91115
				6 Spd.(fr. Chassis/VIN 8E-4-270 001) w/ Solid Flywheel	K70771-01F ◎		9	15/16	23T	*	SH5269	SH6325	*
			04-02	6 Spd.(to Chassis/VIN 8E-4-270 000)	K70205-01 ◎	60	9	15/16	23T	*	SH5269	SH6142	DMF91115
				6 Spd.(to Chassis/VIN 8E-4-270 000) w/ Solid Flywheel	K70771-01F ◎		9	15/16	23T	*	SH5269	SH6142	*

◎ Kit Only

* Not Available
Ø Components Available
Š Kit Includes Concentric Slave Cylinder
ƒ Kit Includes Flywheel

© 2014 ZF North American Operations, Inc. All Rights Reserved. No portion of this work may be reproduced or copied by any means without the prior approval of ZF North American Operations, Inc.

SACHS

CLUTCH KIT

Cyl.	CC Cubic Inch	Liter	Year	Application Information	Clutch Kit	Notes Pg.180	Disc Size O.D.	Disc Size I.D.	Disc Size Teeth	PreFilled Master Or System	Master Cylinder	Slave Cylinder	Flywheel
AUDI (Cont'd)													
A4 QUATTRO (Cont'd)													
4	1781cc	1.8	01-97	(fr. ch. #8D-V-170 679)	K70205-01 ◎	60	9	15/16	23T	*	SH5161	SH6142	DMF91115
				(to ch. #8D-V-170 679), w/ Solid Flywheel	K70771-01F ◎		9	15/16	23T	*	SH5161	SH6142	*
			97	(to ch. #8D-V-170 678)	K70205-01 ◎	60	9	15/16	23T	*	SH5165	SH6141	DMF91115
				(to ch. #8D-V-170 678), w/ Solid Flywheel	K70771-01F ◎		9	15/16	23T	*	SH5165	SH6141	*
	1984cc	2.0	13		K70614-01 ◎		9 7/16	15/16	28T	*	SH5524	*	*
			12-09		K70614-01 ◎		9 7/16	15/16	28T	*	SH5524	SH6514	*
			08-05		K70617-01 ◎		9 7/16	15/16	23T	*	SH5269	SH6325	*
6	2771cc	2.8	01-97	(fr. ch. #8D-V-170 679)	K70007-01 ◎	60	9 1/2	15/16	23T	*	SH5161	SH6142	DMF91119
			97-96	(to ch. #8D-V-170 678)	K70007-01 ◎	60	9 1/2	15/16	23T	*	SH5165	SH6141	DMF91119
	2976cc	3.0	05	6 Spd.	K70350-01 ◎		9 7/16	7/8	23T	*	SH5269	SH6325	*
			04-02	6 Spd.	K70350-01 ◎		9 7/16	7/8	23T	*	SH5269	SH6142	*
	3123cc	3.2	08-05		K70350-02 ◎		9 3/8	1	23T	*	SH5269	SH6325	*
A5 QUATTRO													
4	1984cc	2.0	13		K70614-01 ◎		9 7/16	15/16	28T	*	SH5524	*	*
			12-10		K70614-01 ◎		9 7/16	15/16	28T	*	SH5524	SH6514	*
6	3123cc	3.2	09-08		K70614-01 ◎		9 7/16	15/16	28T	*	SH5524	SH6514	*
A6													
6	2771cc	2.8	01-99		K70007-01 ◎		9 1/2	15/16	23T	*	SH5161	SH6142	*
			95		K70007-01 ◎	60	9 1/2	15/16	23T	*	SH5159	SH6141	DMF91119
A6 QUATTRO													
6	2671cc	2.7	04-02		K70286-01 ◎	60	9 1/2	15/16	23T	*	SH5268	SH6142	DMF91123
			01-00		K70286-01 ◎	60	9 1/2	15/16	23T	*	SH5161	SH6142	DMF91123
	2771cc	2.8	00		K70007-01 ◎		9 1/2	15/16	23T	*	SH5161	SH6142	*
			95		K70007-01 ◎	60	9 1/2	15/16	23T	*	SH5159	SH6141	DMF91119
ALLROAD QUATTRO													
6	2671cc	2.7	05-02		K70286-01 ◎	60	9 1/2	15/16	23T	*	SH5268	SH6142	DMF91123
			01		K70286-01 ◎	60	9 1/2	15/16	23T	*	SH5161	SH6142	DMF91123
CABRIOLET													
6	2771cc	2.8	97-95		K70007-01 ◎		9 1/2	15/16	23T	*	SH5405	SH6141	*
COUPE													
5	2144cc	2.2	84-81		KF117-02 ◎		8 1/2	13/16	24T	*	*	*	*
	2226cc	2.2	87-85		KF122-01 ◎		9	13/16	24T	*	*	*	*
			84	KX Eng	KF122-01 ◎		9	13/16	24T	*	*	SH6400	*
	2309cc	2.3	87		KF122-01 ◎		9	13/16	24T	*	*	SH6400	*
COUPE QUATTRO													
5	2309cc	2.3	91-90		KF771-02		9 1/2	15/16	23T	*	SH5405	SH6141	*
FOX													
4	1471cc	1.5	74-73		KF294-02 ◎		8	13/16	24T	*	*	*	*
	1588cc	1.6	79-75		KF294-02 ◎		8	13/16	24T	*	*	*	*
QUATTRO													
5	2144cc	2.2	85-83		KF293-01 ◎		9 1/2	13/16	24T	*	*	*	*
RS4													
8	4172cc	4.2	08-07		K70534-01 ◎		9 7/16	1 1/8	23T	*	SH5269	SH6325	*

◎ Kit Only

* Not Available
Ø Components Available
Š Kit Includes Concentric Slave Cylinder
ƒ Kit Includes Flywheel

© 2014 ZF North American Operations, Inc. All Rights Reserved. No portion of this work may be reproduced or copied by any means without the prior approval of ZF North American Operations, Inc.

CLUTCH KIT

Cyl.	CC Cubic Inch	Liter	Year	Application Information	Clutch Kit	Notes Pg.180	Disc Size O.D.	Disc Size I.D.	Disc Size Teeth	PreFilled Master Or System	Master Cylinder	Slave Cylinder	Flywheel
AUDI (Cont'd)													
S4													
5	2226cc	2.2	94-92		K70074-01		9 1/2	15/16	23T	*	SH5159	SH6141	*
6	2671cc	2.7	02-00		K70286-01 ◎	60	9 1/2	15/16	23T	*	SH5161	SH6142	DMF91123
	2995cc	3.0	13	(to 1/28/13)	K70619-01 ◎		9 7/16	1	27T	*	*	SH6514	*
			12-10		K70619-01 ◎		9 7/16	1	27T	*	SH5524	SH6514	*
8	4163cc	4.2	09-05	(fr. Ch #8E-5-084 001)	K70534-01 ◎		9 7/16	1 1/8	23T	*	SH5269	SH6325	*
			05-04	(fr. Ch #8E-4-270 001 to Ch #8E-5-084 000)	K70482-01 ◎		9 7/16	1 1/8	23T	*	SH5269	SH6325	*
			04	(to Ch #8E-4-270 000)	K70482-01 ◎		9 7/16	1 1/8	23T	*	SH5269	SH6142	*
S5													
6	2995cc	3.0	13		K70619-01 ◎		9 7/16	1	27T	*	*	SH6514	*
8	4163cc	4.2	12-08		K70619-01 ◎		9 7/16	1	27T	*	SH5524	SH6514	*
S6													
5	2226cc	2.2	97-95		K70074-01		9 1/2	15/16	23T	*	SH5159	SH6141	*
TT													
4	1781cc	1.8	02-01	(fr. ch.#8N1006001), Kit w/o DMF	K70319-01 ◎		8 7/8	7/8	28T	*	SH5162	SH6144	*
				(fr. ch.#8N1006001), Kit w/ DMF	K70319-01F ◎	10	8 7/8	7/8	28T	*	SH5162	SH6144	*
			02-00	Kit w/ Solid Flywheel	K70038-02F		9	7/8	28T	*	SH5162	SH6144	*
			01-00	(to ch.#8N1006000), Kit w/o DMF	K70249-01 ◎		8 5/8	7/8	28T	*	SH5162	SH6144	*
TT QUATTRO													
4	1781cc	1.8	06-00		K70287-02 Š	60	9 7/16	15/16	23T	*	SH5162	SB60126	DMF91126
5	2480cc	2.5	13-12	RS	*					*	SH5495	SB60126	*
6	3189cc	3.2	09-08		K70468-01 Š◎		9 7/16	15/16	23T	*	SH5495	SB60126	*
80													
4	1983cc	2.0	90-88		KF770-01 ◎		9	15/16	23T	*	SH5405	SH6141	*
5	2309cc	2.3	92-91		KF771-01 ◎		9	15/16	23T	*	SH5405	SH6141	*
80 QUATTRO													
5	2309cc	2.3	92-88		KF771-01 ◎		9	15/16	23T	*	SH5405	SH6141	*
90													
5	2309cc	2.3	91-88		KF771-01 ◎		9	15/16	23T	*	SH5405	SH6140	*
6	2771cc	2.8	95-93		K70007-01 ◎	60	9 1/2	15/16	23T	*	SH5405	SH6141	DMF91119
90 QUATTRO													
5	2309cc	2.3	91-90		KF771-02		9 1/2	15/16	23T	*	SH5405	SH6140	*
			89-88		KF771-01 ◎		9	15/16	23T	*	SH5405	SH6140	*
6	2771cc	2.8	95-93		K70007-01 ◎	60	9 1/2	15/16	23T	*	SH5405	SH6141	DMF91119
100 SERIES													
4	1760cc	1.8	71	(fr. eng. #ZY 008 878)	KF117-02 ◎		8 1/2	13/16	24T	*	*	*	*
	1872cc	1.9	77-72	(fr. eng. #ZY 008 878)	KF117-02 ◎		8 1/2	13/16	24T	*	*	*	*
100 QUATTRO													
5	2309cc	2.3	91-89		KF771-01 ◎		9	15/16	23T	*	SH5124	SH6141	*
6	2771cc	2.8	94-92		K70007-01 ◎		9 1/2	15/16	23T	*	SH5124	SH6141	*
200 QUATTRO													
5	2226cc	2.2	91-89		KF772-01 ◎		9 1/2	13/16	24T	*	SH5124	SH6141	*
4000													
4	1588cc	1.6	83-82	Non-Turbo	KF116-01		7 1/2	13/16	24T	*	*	SH6400	*
				Turbo	KF294-02 ◎		8	13/16	24T	*	*	SH6400	*

◎ Kit Only

* Not Available
Ø Components Available
Š Kit Includes Concentric Slave Cylinder
ƒ Kit Includes Flywheel

© 2014 ZF North American Operations, Inc. All Rights Reserved. No portion of this work may be reproduced or copied by any means without the prior approval of ZF North American Operations, Inc.

SACHS

CLUTCH KIT

Cyl.	CC Cubic Inch	Liter	Year	Application Information	Clutch Kit	Notes Pg.180	Disc Size O.D.	Disc Size I.D.	Disc Size Teeth	PreFilled Master Or System	Master Cylinder	Slave Cylinder	Flywheel
AUDI (Cont'd)													
4000 (Cont'd)													
4	1588cc	1.6	80		KF294-02 ◎		8	13/16	24T	*	*	SH6400	*
	1715cc	1.7	83-81		KF294-02 ◎		8	13/16	24T	*	*	SH6400	*
	1780cc	1.8	87-84		KF294-01 ◎		8 1/4	13/16	24T	*	*	SH6400	*
4000 QUATTRO													
5	2226cc	2.2	87-84		KF122-01 ◎		9	13/16	24T	*	*	SH6400	*
5000													
5	2144cc	2.2	84-80	WE, WD, WU eng.	KF122-01 ◎		9	13/16	24T	*	SH5124	SH6400	*
			79-78	WE, WD eng.	KF122-01 ◎		9	13/16	24T	*	*	*	*
	2226cc	2.2	87-85	Non-Turbo	KF122-01 ◎		9	13/16	24T	*	SH5124	SH6400	*
5000 QUATTRO													
5	2226cc	2.2	88-86		KF293-01 ◎		9 1/2	13/16	24T	*	SH5124	SH6400	*
BMW													
BAVARIA													
6	2985cc	3.0	74-72		K70009-01 ◎		9 1/2	1 1/8	10T	*	*	SH6010	*
M3													
4	2302cc	2.3	91-88	(E30)	KF775-01 ◎		9	1 1/8	10T	*	SH5103	SH6010	*
6	2990cc	3.0	95	(E36) (fr. 10/94)	KF778-02		9 1/2	1 1/8	10T	*	SH5478	SH6169	*
				(E36) (to 10/94)	KF778-02		9 1/2	1 1/8	10T	*	SH5200	SH6169	*
	3152cc	3.2	99-96	(E36) 5 Spd.	K70238-01 ◎	60	9 1/2	1 1/8	10T	*	SH5478	SH6169	DMF91133
	3246cc	3.2	06-02	(E46) 6 Spd., Sequential trans.	K70380-01 ◎	60	9 1/2	1 3/8	10T	*	*	*	DMF91135
			06-01	(E46) 6 Spd., Non-Sequential trans.	K70380-01 ◎	60	9 1/2	1 3/8	10T	*	SH5201	SH6168	DMF91135
8	3999cc	4.0	13-08	(E90) & (E92)	K70605-01 ◎		9 7/16	1 9/32	26T	*	SH5201	SH6505	*
M5													
6	3453cc	3.5	88	(E28) (to 6/88)	KF776-01 ◎		9 1/2	1 1/8	10T	*	SH5103	SH6010	*
	3553cc	3.6	93-91	(E34)	KF776-01 ◎		9 1/2	1 1/8	10T	*	*	SH6010	*
8	4395cc	4.4	13	(F10)	*					*	*	SH6505	*
	4941cc	5.0	03-00	(E39)	K70282-01 ◎	60	9 1/2	1 3/8	10T	*	SH5201	SH6169	DMF91117
10	4999cc	5.0	10-07	(E60) 6 Spd.	*					*	SH5266	SH6169	*
			09-06	(E60) 7 Spd.	K70467-01 ◎		9	7/20	26T	*	*	*	*
M6													
6	3453cc	3.5	88-87	(E24)	KF776-01 ◎		9 1/2	1 1/8	10T	*	SH5103	SH6010	*
8	4395cc	4.4	13-12	(F10)	*					*	*	SH6505	*
10	4999cc	5.0	10-08	(E63, E64) 6 Spd.	*					*	SH5266	SH6169	*
			09-06	(E63, E64) 7 Spd.	K70467-01 ◎		9	7/20	26T	*	*	*	*
Z3													
4	1895cc	1.9	98-96	(E36)	K70010-01 ◎	60	8 1/2	1 1/8	10T	*	SH5478	SH6349	DMF91111
6	2494cc	2.5	02-99	(E36)	K70280-01 ◎	60,66	9 1/8	1 1/8	10T	*	SH5478	SH6169	DMF91173
	2793cc	2.8	00-99	(E36) (fr. 2/99)	K70281-01 ◎	60,66	9 1/2	1 1/8	10T	*	SH5478	SH6169	DMF91173
			99	(E36) (to 1/99)	K70281-01 ◎	60,66	9 1/2	1 1/8	10T	*	SH5478	SH6349	DMF91173
			98-97	(E36)	K70206-01 ◎	60	9 1/2	1 1/8	10T	*	SH5478	SH6349	DMF91108
	2979cc	3.0	02-01	(E36)	K70288-02 ◎	60	9 1/2	1 1/8	10T	*	SH5478	SH6169	DMF91173
	3152cc	3.2	00-98	(E36)	K70238-01 ◎	60	9 1/2	1 1/8	10T	*	SH5478	SH6169	DMF91133
	3246cc	3.2	02-01	(E36)	K70238-01 ◎	60	9 1/2	1 1/8	10T	*	SH5478	SH6169	DMF91133

◎ Kit Only

* Not Available
Ø Components Available
Š Kit Includes Concentric Slave Cylinder
ƒ Kit Includes Flywheel

© 2014 ZF North American Operations, Inc. All Rights Reserved. No portion of this work may be reproduced or copied by any means without the prior approval of ZF North American Operations, Inc.

CLUTCH KIT

Cyl.	CC Cubic Inch	Liter	Year	Application Information	Clutch Kit	Notes Pg.180	Disc Size O.D.	Disc Size I.D.	Disc Size Teeth	PreFilled Master Or System	Master Cylinder	Slave Cylinder	Flywheel
BMW (Cont'd)													
Z4													
4	1997cc	2.0	13-12	(E89) sDrive28i, Turbo	*					*	SH5201	SH6505	*
6	2494cc	2.5	05-03	(E85) (fr. 10/03) 5 Spd., Non-Sequential trans.	K70520-01 ◎	60	9 1/8	1 5/32	22T	*	SH5201	SH6168	*
				(E85) (to 10/03) 5 Spd., Non-Sequential trans.	K70280-01 ◎	66	9 1/8	1 1/8	10T	*	SH5201	SH6168	*
			04-03	(E85) Sequential trans.	K70533-01 ◎	60	9 1/8	1 5/32	22T	*	*	*	DMF91175
	2979cc	3.0	13-12	(E89) sDrive35i	K70526-02 ◎☼		9 7/16	1 1/8	26T	*	SH5201	SH6505	*
			11-09	(E89) sDrive35i	K70526-02 ◎☼		9 7/16	1 1/8	26T	*	SH5201	SH6168	*
			05-03	(E85) Non-Sequential trans.	K70496-01 ◎☼	60	9 7/16	1 1/8	22T	*	SH5201	SH6168	*
				(E85) Sequential trans.	K70496-01 ◎☼	60	9 7/16	1 1/8	22T	*	*	*	DMF91175
	2996cc	3.0	11-09	(E89) sDrive30i	K70496-01 ◎☼	60	9 7/16	1 1/8	22T	*	SH5201	SH6168	*
			08-06	(E85, E86) si	K70496-01 ◎☼	60	9 7/16	1 1/8	22T	*	SH5201	SH6168	*
				(E85) i	K70558-01 ◎☼	60	8 31/32	1 1/8	22T	*	SH5201	SH6168	*
	3246cc	3.2	08-06	(E85 & E86) M	K70481-01 ◎	60	9 7/16	1 1/8	22T	*	SH5201	SH6168	DMF91135
Z8													
8	4941cc	5.0	03-00	(E52)	K70282-01 ◎	60	9 1/2	1 3/8	10T	*	SH5201	SH6169	DMF91117
1 SERIES M													
6	2979cc	3.0	11	(E82)	*					*	SH5201	SH6505	*
128													
6	2996cc	3.0	13-08	(E82 & E88) i	K70558-01 ◎☼	60	8 31/32	1 1/8	22T	*	SH5201	SH6505	*
135													
6	2979cc	3.0	13-11	(E82) i	K70648-01 ◎☼	60				*	SH5201	SH6505	*
			10-08	(E82)	K70526-02 ◎☼	60	9 7/16	1 1/8	26T	*	SH5201	SH6505	*
318													
4	1766cc	1.8	85-84	(E30) i	KF137-02 ◎		8 1/2	1 1/8	10T	*	SH5103	SH6010	*
	1796cc	1.8	95-93	(E36) (fr. 10/94) i, is, ti, (Exc. A/C)	K70076-01 ◎	60	8 1/2	1 1/8	10T	*	SH5478	SH6349	DMF91111
				(E36) (fr. 10/94) i, is, ti, (w/ A/C)	K70010-01 ◎	60	8 1/2	1 1/8	10T	*	SH5478	SH6349	DMF91111
				(E36) (to 10/94) i, is, ti, (Exc. A/C)	K70076-01 ◎	60	8 1/2	1 1/8	10T	*	*	SH6349	DMF91111
				(E36) (to 10/94) i, is, ti, (w/ A/C)	K70010-01 ◎	60	8 1/2	1 1/8	10T	*	*	SH6349	DMF91111
			92	(E36) i Sedan, is, (Exc. A/C)	K70076-01 ◎	60	8 1/2	1 1/8	10T	*	*	SH6349	DMF91111
				(E36) i Sedan, is, (w/ A/C)	K70010-01 ◎	60	8 1/2	1 1/8	10T	*	*	SH6349	DMF91111
				(E30) i Convertible	K70076-01 ◎	60	8 1/2	1 1/8	10T	*	*	SH6349	DMF91111
			91	(E30) i, is	K70076-01 ◎	60	8 1/2	1 1/8	10T	*	*	SH6349	DMF91111
	1895cc	1.9	99-96	(E36) i, is, ti	K70010-01 ◎	60	8 1/2	1 1/8	10T	*	SH5478	SH6349	DMF91111
320													
4	1766cc	1.8	82-80	(E21) i	KF137-02 ◎		8 1/2	1 1/8	10T	*	*	SH6010	*
	1990cc	2.0	79-77	(E21) i	KF137-02 ◎		8 1/2	1 1/8	10T	*	*	SH6010	*
323													
6	2494cc	2.5	00	(E46) Ci, i Sedan, Wagon	K70280-01 ◎	60,66	9 1/8	1 1/8	10T	*	SH5201	SH6168	DMF91173
			99	(E46) i, Sedan	K70280-01 ◎	60,66	9 1/8	1 1/8	10T	*	SH5201	SH6168	DMF91173
			99-98	(E36) i, Convertible, is	KF649-01 ◎	60	9	1 1/8	10T	*	SH5478	SH6349	DMF91136
325													
6	2494cc	2.5	06-04	(E46) Ci, Non-Sequential trans.	K70520-01 ◎	60	9 1/8	1 5/32	22T	*	SH5201	SH6168	DMF91173
			05-04	(E46) Ci, Sequential trans.	K70533-01 ◎	60	9 1/8	1 5/32	22T	*	SH5201	SH6168	DMF91175
				(E46) i, Non-Sequential trans.	K70520-01 ◎	60	9 1/8	1 5/32	22T	*	SH5201	SH6168	DMF91173
				(E46) i, Sequential trans.	K70533-01 ◎	60	9 1/8	1 5/32	22T	*	SH5201	SH6168	DMF91175

◎ Kit Only
☼ Kit includes Clutch Fork

* Not Available
Ø Components Available
Š Kit Includes Concentric Slave Cylinder
ƒ Kit Includes Flywheel

© 2014 ZF North American Operations, Inc. All Rights Reserved. No portion of this work may be reproduced or copied by any means without the prior approval of ZF North American Operations, Inc.

SACHS

CLUTCH KIT

Cyl.	CC Cubic Inch	Liter	Year	Application Information	Clutch Kit	Notes Pg.180	Disc Size O.D.	Disc Size I.D.	Disc Size Teeth	PreFilled Master Or System	Master Cylinder	Slave Cylinder	Flywheel
BMW (Cont'd)													
325 (Cont'd)													
6	2494cc	2.5	05-03	(E46) (fr. 3/03) xi	K70436-01 ◎	60	9 7/16	1 1/8	22T	*	SH5201	SH6168	DMF91173
			03-01	(E46) Ci	K70280-01 ◎	60,66	9 1/8	1 1/8	10T	*	SH5201	SH6168	DMF91173
				(E46) (to 3/03) xi	K70288-02 ◎	60	9 1/2	1 1/8	10T	*	SH5201	SH6168	DMF91173
				(E46) i	K70280-01 ◎	60,66	9 1/8	1 1/8	10T	*	SH5201	SH6168	DMF91173
			95-92	(E36) i, is	KF649-01 ◎	60	9	1 1/8	10T	*	SH5478	SH6349	DMF91110
				(E36) i, is, Kit w/ Solid Flywheel	KF696-01F ƒ◎		9	1 1/8	10T	*	SH5478	SH6349	*
			91-88	(E30) ix	KF296-03 ◎		9	1 1/8	10T	*	SH5103	SH6010	*
	2495cc	2.5	91-87	(E30) i, is	KF296-03 ◎		9	1 1/8	10T	*	SH5103	SH6010	*
	2693cc	2.7	87	(E30)	KF649-01 ◎	60	9	1 1/8	10T	*	SH5103	SH6010	*
			86-84	(E30)	KF296-03 ◎	40	9	1 1/8	10T	*	SH5103	SH6010	*
	2996cc	3.0	06	(E90) i	K70558-01 ◎☼	60	8 31/32	1 1/8	22T	*	SH5201	SH6169	*
				(E90) xi	K70528-01 ◎☼	60	9 7/16	1 1/8	22T	*	SH5201	SH6169	*
328													
4	1997cc	2.0	13-12	(F30, F35) i	K70651-01 ◎☼	60				*	*	*	*
6	2793cc	2.8	00	(E46) Ci	K70281-01 ◎	60,66	9 1/2	1 1/8	10T	*	SH5201	SH6168	DMF91173
			00-99	(E46) i Sedan	K70281-01 ◎	60,66	9 1/2	1 1/8	10T	*	SH5201	SH6168	DMF91173
			99	(E36) i, Convertible, is	K70206-01 ◎	60	9 1/2	1 1/8	10T	*	SH5478	SH6349	DMF91108
			98-96	(E36) i, is	K70206-01 ◎	60	9 1/2	1 1/8	10T	*	SH5478	SH6349	DMF91108
	2996cc	3.0	13-09	(E90, E91, E92, E93) i xDrive	K70528-01 ◎☼	60	9 7/16	1 1/8	22T	*	SH5201	SH6505	*
			13-07	(E90, E93) i	K70558-01 ◎☼	60	8 31/32	1 1/8	22T	*	SH5201	SH6505	*
			08-07	(E90) xi	K70528-01 ◎☼	60	9 7/16	1 1/8	22T	*	SH5201	SH6505	*
330													
6	2979cc	3.0	06-04	(E46) Ci	K70436-01 ◎	60	9 7/16	1 1/8	22T	*	SH5201	SH6168	DMF91175
			05-04	(E46) i	K70436-01 ◎	60	9 7/16	1 1/8	22T	*	SH5201	SH6168	DMF91175
				(E46) xi	K70535-01 ◎	60	9 7/16	1 1/8	22T	*	SH5201	SH6168	DMF91175
			03-01	(E46) i, Ci	K70288-02 ◎	60	9 1/2	1 1/8	10T	*	SH5201	SH6168	DMF91173
				(E46) xi	K70471-01 ◎	60	9 7/16	1 1/8	10T	*	SH5201	SH6168	DMF91173
	2996cc	3.0	06	(E46) i, xi	K70528-01 ◎☼	60	9 7/16	1 1/8	22T	*	SH5201	SH6169	*
335													
6	2979cc	3.0	13	(F30) i xDrive	*					*	SH5201	*	*
			13-12	(E90) i Sedan	*					*	SH5201	*	*
				(E90) i Convertible	K70526-02 ◎☼		9 7/16	1 1/8	26T	*	SH5201	SH6505	*
			13-11	(E92 LCI & E93 LCI) is	*					*	SH5201	SH6505	*
			12-09	(E90) i xDrive	K70526-02 ◎☼		9 7/16	1 1/8	26T	*	SH5201	SH6505	*
			11-07	(E90) i	K70526-02 ◎☼		9 7/16	1 1/8	26T	*	SH5201	SH6505	*
			08-07	(E90) xi	K70526-02 ◎☼	60	9 7/16	1 1/8	26T	*	SH5201	SH6505	*
524													
6	2443cc	2.4	86	(E28) (fr. 1/86) td	KF649-01 ◎		9	1 1/8	10T	*	SH5103	SH6010	*
			85	(E28) (to 12/85) td	KF296-03 ◎		9	1 1/8	10T	*	SH5103	SH6010	*
525													
6	2494cc	2.5	05-04	(E60) i, Non-Sequential trans.	K70520-01 ◎	60	9 1/8	1 5/32	22T	*	SH5266	SH6169	DMF91175
			04	(E60) i, Sequential trans.	K70533-01 ◎	60	9 1/8	1 5/32	22T	*	SH5266	SH6169	DMF91175
			03-01	(E39) i	K70280-01 ◎	60,66	9 1/8	1 1/8	10T	*	SH5201	SH6169	DMF91173
			95-91	(E34) i	KF649-01 ◎	60	9	1 1/8	10T	*	SH5103	SH6169	DMF91110
				(E34) I, Kit w/ Solid Flywheel	KF696-01F ƒ◎		9	1 1/8	10T	*	SH5103	SH6169	*

◎ Kit Only
☼ Kit includes Clutch Fork

* Not Available
Ø Components Available
Š Kit Includes Concentric Slave Cylinder
ƒ Kit Includes Flywheel

© 2014 ZF North American Operations, Inc. All Rights Reserved. No portion of this work may be reproduced or copied by any means without the prior approval of ZF North American Operations, Inc.

CLUTCH KIT

Cyl.	CC Cubic Inch	Liter	Year	Application Information	Clutch Kit	Notes Pg.180	Disc Size O.D.	Disc Size I.D.	Disc Size Teeth	PreFilled Master Or System	Master Cylinder	Slave Cylinder	Flywheel
BMW (Cont'd)													
525 (Cont'd)													
6	2494cc	2.5	90-89	(E34) i	KF296-03 ◎		9	1 1/8	10T	*	SH5103	*	*
	2996cc	3.0	07-06	(E60) i	K70558-01 ◎☼	60	8 31/32	1 1/8	22T	*	SH5266	SH6169	*
				(E60) xi	K70528-01 ◎☼	60	9 7/16	1 1/8	22T	*	SH5266	SH6169	*
528													
6	2693cc	2.7	88-86	(E28) (fr. 5/86) e	KF649-01 ◎	60	9	1 1/8	10T	*	SH5103	SH6010	*
			86-82	(E28) (to 4/86) e	KF296-03 ◎	40	9	1 1/8	10T	*	SH5103	SH6010	*
	2788cc	2.8	81-79	(E12) i	K70009-01 ◎		9 1/2	1 1/8	10T	*	*	SH6010	*
	2793cc	2.8	00-98	(E39) i	K70281-01 ◎	60,66	9 1/2	1 1/8	10T	*	SH5201	SH6169	DMF91173
			97	(E39) i	K70206-01 ◎	60	9 1/2	1 1/8	10T	*	*	SH6169	DMF91108
	2996cc	3.0	10-09	(E60) i xDrive	K70528-01 ◎☼	60	9 7/16	1 1/8	22T	*	SH5266	SH6505	*
			10-08	(E60) i	K70558-01 ◎☼	60	8 31/32	1 1/8	22T	*	SH5266	SH6505	*
			08	(E60) xi	K70528-01 ◎☼	60	9 7/16	1 1/8	22T	*	SH5266	SH6505	*
530													
6	2979cc	3.0	05-04	(E60) i	K70436-01 ◎		9 7/16	1 1/8	22T	*	SH5266	SH6169	DMF91175
			03-01	(E39) i	K70288-02 ◎	60	9 1/2	1 1/8	10T	*	SH5201	SH6169	DMF91173
	2985cc	3.0	78-75	(E12) i	K70009-01 ◎		9 1/2	1 1/8	10T	*	*	SH6010	*
	2996cc	3.0	07-06	(E60) i, xi, Non-Sequential trans.	K70528-01 ◎☼	60	9 7/16	1 1/8	22T	*	SH5266	SH6169	*
				(E60) i, Sequential trans.	*					*	SH5266	SH6169	*
8	2997cc	3.0	95-94	(E34) i	K70122-01 ◎	60	9 1/2	1 1/8	10T	*	SH5103	SH6169	DMF91137
533													
6	3210cc	3.2	84	(E28) (fr. 4/84) i	KF652-03 ◎		9 1/2	1 1/8	10T	*	SH5103	SH6010	*
			84-83	(E28) (to 3/84) i	K70009-01 ◎		9 1/2	1 1/8	10T	*	SH5103	SH6010	*
535													
6	2979cc	3.0	13-11	(F10) i	K70648-01 ◎☼	60				*	*	SH6505	*
			10-09	(E60) (fr. 1/09) i xDrive	K70526-02 ◎☼		9 7/16	1 1/8	26T	*	SH5266	SH6505	*
			10-08	(E60) (fr. 1/09) i	K70526-02 ◎☼	60	9 7/16	1 1/8	26T	*	SH5266	SH6505	*
			08	(E60) xi	K70526-02 ◎☼	60	9 7/16	1 1/8	26T	*	SH5266	SH6505	*
	3430cc	3.5	93-89	(E34) i, is	KF778-01 ◎		9 1/2	1 1/8	10T	*	SH5103	SH6010	*
			88-85	(E28) i, is	KF652-03 ◎		9 1/2	1 1/8	10T	*	SH5103	SH6010	*
540													
8	3982cc	4.0	95-94	(E34) i	K70123-02 ◎	60	10 1/2	1 3/8	10T	*	SH5103	*	DMF91127
	4398cc	4.4	03-98	(E39) i	K70207-01 ◎	60	9 1/2	1 3/8	10T	*	SH5201	SH6169	DMF91138
			97	(E39) (fr. 6/96) i	K70207-01 ◎	60	9 1/2	1 3/8	10T	*	*	SH6169	DMF91138
				(E39) (to 6/96) i	K70123-02 ◎	60	10 1/2	1 3/8	10T	*	*	*	DMF91122
545													
8	4398cc	4.4	05-04	(E60) i, Sequential trans.	K70480-01 ◎		9 7/16	1 1/8	26T	*	SH5266	SH6169	*
				(E60) i, Non-Sequential trans.	K70541-01 ◎		9 7/16	1 1/8	26T	*	SH5266	SH6169	*
550													
8	4395cc	4.4	13-11	(F10) i	*					*	*	SH6505	*
	4837cc	4.8	10-09	(E60) i	K70612-01 ◎		9 7/16	1 3/8	26T	*	SH5266	SH6505	*
			08-07	(E60) (fr. 3/07) i	K70612-01 ◎		9 7/16	1 3/8	26T	*	SH5266	SH6169	*
			07-06	(E60) (to 3/07) i	K70480-01 ◎		9 7/16	1 1/8	26T	*	SH5266	SH6169	*
630													
6	2985cc	3.0	77	(E24) CSi	K70009-01 ◎		9 1/2	1 1/8	10T	*	*	SH6010	*

◎ Kit Only
☼ Kit includes Clutch Fork

* Not Available
Ø Components Available
Š Kit Includes Concentric Slave Cylinder
ƒ Kit Includes Flywheel

© 2014 ZF North American Operations, Inc. All Rights Reserved. No portion of this work may be reproduced or copied by any means without the prior approval of ZF North American Operations, Inc.

SACHS

CLUTCH KIT

Cyl.	CC Cubic Inch	Liter	Year	Application Information	Clutch Kit	Notes Pg.180	Disc Size O.D.	Disc Size I.D.	Disc Size Teeth	PreFilled Master Or System	Master Cylinder	Slave Cylinder	Flywheel
BMW (Cont'd)													
633													
6	3210cc	3.2	84	(E24) (fr. 4/84) CSi	KF652-03 ◎		9 1/2	1 1/8	10T	*	SH5103	SH6010	*
			84-78	(E24) (to 3/84) CSi	K70009-01 ◎		9 1/2	1 1/8	10T	*	*	SH6010	*
635													
6	3430cc	3.5	89-85	(E24) CSi	KF652-02 ◎		9 1/2	1 1/8	10T	*	SH5103	SH6010	*
645													
8	4398cc	4.4	05-04	(E64) Ci, Sequential trans.	K70480-01 ◎		9 7/16	1 1/8	26T	*	SH5266	SH6169	*
				(E64) Ci, Non-Sequential trans.	K70541-01 ◎		9 7/16	1 1/8	26T	*	SH5266	SH6169	*
650													
8	4395cc	4.4	13-12	(F12) (F13) i	*					*	*	SH6505	*
	4837cc	4.8	10-09	(E63) i	K70612-01 ◎		9 7/16	1 3/8	26T	*	SH5266	SH6505	*
			08-07	(E63) (fr. 3/07) i	K70612-01 ◎		9 7/16	1 3/8	26T	*	SH5266	SH6169	*
			07-06	(E63) (to 3/07) i	K70480-01 ◎		9 7/16	1 1/8	26T	*	SH5266	SH6169	*
733													
6	3210cc	3.2	84	(E23) (fr. 4/84) i	*					*	*	SH6010	*
			84-78	(E23) (to 3/84) i	K70009-01 ◎		9 1/2	1 1/8	10T	*	*	*	*
735													
6	3430cc	3.5	92-88	(E32) i	KF778-01 ◎		9 1/2	1 1/8	10T	*	SH5103	SH6010	*
			87-85	(E32) i	KF652-02 ◎		9 1/2	1 1/8	10T	*	*	SH6010	*
850													
12	4988cc	5.0	94-91	(E31) i, Ci	*					*	SH5103	*	*
	5576cc	5.6	95-94	(E31) CSi	*					*	SH5103	SH6169	*
2000													
4	1990cc	2.0	72-69	(fr. ch. #1962745), (fr. ch. #1109294) CS, (fr. ch. #1472294) TI	KF138-01		9	1 1/8	10T	*	SH5415	*	*
2002													
4	1990cc	2.0	76-74		KF137-01 ◎		8 1/2	1 1/8	10T	*	SH5415	*	*
			74-72	TII	KF138-01		9	1 1/8	10T	*	SH5415	*	*
			73-70	(fr. ch. #1681796), (fr. ch. #1665244) TI	KF138-01		9	1 1/8	10T	*	*	*	*
			71-69	(fr. 3/69) exc. TII	KF138-01		9	1 1/8	10T	*	SH5415	*	*
2800													
6	2788cc	2.8	74		K70009-01 ◎		9 1/2	1 1/8	10T	*	*	SH6010	*
			73-69		KF139-01		9 1/2	1 1/8	10T	*	*	SH6010	*
3.0													
6	2985cc	3.0	76-74	ES, CSi, Si	K70009-01 ◎		9 1/2	1 1/8	10T	*	*	*	*
			73-71	CS, CSI, SI	KF137-02 ◎		8 1/2	1 1/8	10T	*	*	SH6010	*
BMW LIGHT TRUCK													
X3													
6	2494cc	2.5	05-04	(E83)	K70436-01 ◎	60	9 7/16	1 1/8	22T	*	SH5201	SH6168	DMF91175
	2979cc	3.0	06-04	(E83)	K70535-01 ◎	60	9 7/16	1 1/8	22T	*	SH5201	SH6168	DMF91175
	2996cc	3.0	10-09	(E83) xDrive30i	K70528-01 ◎☼	60	9 7/16	1 1/8	22T	*	SH5201	SH6168	*
			08-07	(E83) si	K70528-01 ◎☼	60	9 7/16	1 1/8	22T	*	SH5201	SH6168	*

◎ Kit Only
☼ Kit includes Clutch Fork

* Not Available
Ø Components Available
Š Kit Includes Concentric Slave Cylinder
ƒ Kit Includes Flywheel

© 2014 ZF North American Operations, Inc. All Rights Reserved. No portion of this work may be reproduced or copied by any means without the prior approval of ZF North American Operations, Inc.

CLUTCH KIT

Cyl.	CC Cubic Inch	Liter	Year	Application Information	Clutch Kit	Notes Pg.180	Disc Size O.D.	Disc Size I.D.	Disc Size Teeth	PreFilled Master Or System	Master Cylinder	Slave Cylinder	Flywheel
BMW LIGHT TRUCK (Cont'd)													
X5													
6	2979cc	3.0	06-04	(E53) (fr. 10/03)	K70548-01 ◎	60	9 7/16	1	22T	*	SH5201	SH6169	DMF91175
			04-01	(E53) (to 10/03)	K70288-03 ◎	60	9 7/16	1 1/8	10T	*	SH5201	SH6169	DMF91173
BUICK													
APOLLO													
6	250"	4.1	75-73		K1874-06		10	1 1/8	10T	*	*	*	*
CENTURION													
8	350"	5.7	73-72	4 Spd.	K1874-01		10 3/8	1 1/8	26T	*	*	*	*
				3 Spd.	K1675-10		10 1/2	1 1/8	10T	*	*	*	*
CENTURY													
6	173"	2.8	88		K0059-01	29	9 1/8	1	14T	*	*	*	*
	196"	3.2	79		K1675-10	28	10 1/2	1 1/8	10T	*	*	*	*
			78		K1874-02	28	10 1/2	1 1/8	10T	*	*	*	*
	231"	3.8	79		K1675-10	28	10 1/2	1 1/8	10T	*	*	*	*
			78		K1874-02	28	10 1/2	1 1/8	10T	*	*	*	*
			77-76		K1878-02	28	9 1/8	1 1/8	10T	*	*	*	*
8	350"	5.7	73	4 Spd.	K1874-01		10 3/8	1 1/8	26T	*	*	*	*
				3 Spd.	K1675-10		10 1/2	1 1/8	10T	*	*	*	*
GS													
8	350"	5.7	72-71	4 Spd.	K1874-01		10 3/8	1 1/8	26T	*	*	*	*
			72-70	3 Spd., 10 1/2" Clutch	K1675-10		10 1/2	1 1/8	10T	*	*	*	*
GS 350													
8	350"	5.7	69-68	3 Spd.	K1675-10		10 1/2	1 1/8	10T	*	*	*	*
LeSABRE													
6	250"	4.1	70		K1874-02		10 1/2	1 1/8	10T	*	*	*	*
8	300"	4.9	65-64		K1874-02		10 1/2	1 1/8	10T	*	*	*	*
	340"	5.6	67		K1675-10		10 1/2	1 1/8	10T	*	*	*	*
	350"	5.7	73-71	4 Spd.	K1874-01		10 3/8	1 1/8	26T	*	*	*	*
			73-68	3 Spd., 10 1/2" Clutch	K1675-10		10 1/2	1 1/8	10T	*	*	*	*
REGAL													
4	1998cc	2.0	13-11	Turbo	K70531-02 Š◎		9 7/8	1	23T	*	SH5538	SB60255	DMF91179
6	196"	3.2	79		K1675-10	28	10 1/2	1 1/8	10T	*	*	*	*
			78		K1874-02	28	10 1/2	1 1/8	10T	*	*	*	*
	231"	3.8	79		K1675-10	28	10 1/2	1 1/8	10T	*	*	*	*
			78		K1874-02	28	10 1/2	1 1/8	10T	*	*	*	*
			77-76		K1878-02	28	9 1/8	1 1/8	10T	*	*	*	*
8	350"	5.7	73	4 Spd.	K1874-01		10 3/8	1 1/8	26T	*	*	*	*
				3 Spd.	K1675-10		10 1/2	1 1/8	10T	*	*	*	*
SKYHAWK													
4	112"	1.8	86-85	5 Spd.	K0034-02	27	8 1/2	1	14T	*	SH5039	*	*
				4 Spd.	K0034-01		8 1/2	1	14T	*	SH5039	*	*
			84-83	4 Spd.	K0034-01		8 1/2	1	14T	*	*	*	*
				5 Spd.	K0034-02	27	8 1/2	1	14T	*	*	*	*
			82		K1896-01 ◎	1	8	1	14T	*	*	*	NFW1006
	122"	2.0	88-87	K eng.	K0034-02	27,36	8 1/2	1	14T	SPH016	SH5040	*	*

◎ Kit Only

* Not Available
Ø Components Available
Š Kit Includes Concentric Slave Cylinder
ƒ Kit Includes Flywheel

© 2014 ZF North American Operations, Inc. All Rights Reserved. No portion of this work may be reproduced or copied by any means without the prior approval of ZF North American Operations, Inc.

SACHS

CLUTCH KIT

Cyl.	CC Cubic Inch	Liter	Year	Application Information	Clutch Kit	Notes Pg.180	Disc Size O.D.	Disc Size I.D.	Disc Size Teeth	PreFilled Master Or System	Master Cylinder	Slave Cylinder	Flywheel
BUICK (Cont'd)													
SKYHAWK (Cont'd)													
4	122"	2.0	87	4 Spd., 1 eng.	K1914-01		9 1/8	1	14T	*	SH5040	*	NFW1006
			84-83	4 Spd.	K1914-01	1	9 1/8	1	14T	*	*	*	NFW1006
6	231"	3.8	78-76		K1878-02		9 1/8	1 1/8	10T	*	*	*	*
SKYLARK													
4	151"	2.5	85-80	Replaces O.E. 9 11/16" Clutch	K1914-01		9 1/8	1	14T	*	*	*	*
6	173"	2.8	85-80	Replaces O.E. 9 11/16" Clutch	K1914-01	28	9 1/8	1	14T	*	*	*	*
	225"	3.7	67-64		K1874-02		10 1/2	1 1/8	10T	*	*	*	*
	231"	3.8	79-78		K1874-02	28	10 1/2	1 1/8	10T	*	*	*	*
			77-76		K1878-02	28	9 1/8	1 1/8	10T	*	*	*	*
	250"	4.1	71-68		K1874-02		10 1/2	1 1/8	10T	*	*	*	*
8	260"	4.3	76		K1874-05		10	1 1/8	10T	*	*	*	*
	300"	4.9	67-64		K1874-02		10 1/2	1 1/8	10T	*	*	*	*
	340"	5.6	67		K1675-10		10 1/2	1 1/8	10T	*	*	*	*
	350"	5.7	72-71	4 Spd.	K1874-01		10 3/8	1 1/8	26T	*	*	*	*
			72-68	3 Spd., 10 1/2" Clutch	K1675-10		10 1/2	1 1/8	10T	*	*	*	*
SPECIAL													
6	225"	3.7	67-64		K1874-02		10 1/2	1 1/8	10T	*	*	*	*
	250"	4.1	69-68		K1874-02		10 1/2	1 1/8	10T	*	*	*	*
8	300"	4.9	67-64		K1874-02		10 1/2	1 1/8	10T	*	*	*	*
	350"	5.7	69-68	3 Spd.	K1675-10		10 1/2	1 1/8	10T	*	*	*	*
CADILLAC													
CIMARRON													
4	112"	1.8	82		K1914-01	1	9 1/8	1	14T	*	*	*	NFW1006
6	173"	2.8	88-87		K0059-01	29	9 1/8	1	14T	SPH016	SH5040	*	NFW1006
			86-85		K1914-01		9 1/8	1	14T	*	SH5039	*	NFW1006
CTS													
6	170"	2.8	07-05		K70415-01 Š◎		10 1/16	1	23T	*	SH5301	SB60215	DMF91132
				Kit w/ DMF	K70415-01F ◎		10	1	23T	*	SH5301	SB60215	*
	182"	3.0	11-10		K70633-01 ◎		10 1/8	1	23T	*	*	SB60215	*
	197"	3.2	04-03		K70335-01 Š		9 1/2	1	14T	*	SH5203	SB60052	*
	217"	3.6	11-10		K70633-01 ◎		10 1/8	1	23T	*	*	SB60215	*
			09-08		K70415-01 Š◎		10 1/16	1	23T	*	*	SB60215	DMF91132
				Kit w/ DMF	K70415-01F ◎		10	1	23T	*	*	SB60215	*
			07-05		K70415-01 Š◎		10 1/16	1	23T	*	SH5301	SB60215	DMF91132
				Kit w/ DMF	K70415-01F ◎		10	1	23T	*	SH5301	SB60215	*
8	346"	5.7	05-04		*					*	SH5301	SB60197	*
	364"	6.0	07-06		*					*	SH5301	SB60197	*
CHECKER													
DELUXE													
6	250"	4.1	69	Chevrolet eng.	K5473-01		11	1 1/8	10T	*	*	*	*
8	327"	5.3	69	Chevrolet eng.	K5473-01		11	1 1/8	10T	*	*	*	*
	350"	5.7	69	Chevrolet eng.	K1862-01	2	12	1 1/8	10T	*	*	*	*
				Optional Kit/Diaph. Cover	K1909-02		12	1 1/8	10T	*	*	*	*
				Optional Kit/Diaph. w/ HD Disc	K1909-02HD		12	1 1/8	10T	*	*	*	*
				Optional Kit/Diaph. w/ CB Disc	K1909-02CB		12	1 1/8	10T	*	*	*	*
				Optional Kit/Diaph. w/ Kevlar® Disc	K1909-02KL		12	1 1/8	10T	*	*	*	*

◎ Kit Only

* Not Available
Ø Components Available
Š Kit Includes Concentric Slave Cylinder
ƒ Kit Includes Flywheel

© 2014 ZF North American Operations, Inc. All Rights Reserved. No portion of this work may be reproduced or copied by any means without the prior approval of ZF North American Operations, Inc.

CLUTCH KIT

Cyl.	CC Cubic Inch	Liter	Year	Application Information	Clutch Kit	Notes Pg.180	Disc Size O.D.	Disc Size I.D.	Disc Size Teeth	PreFilled Master Or System	Master Cylinder	Slave Cylinder	Flywheel
CHECKER (Cont'd)													
MARATHON													
6	230"	3.8	68-65		K5473-01		11	1 1/8	10T	*	*	*	*
	250"	4.1	74-69	Chevrolet eng.	K5473-01		11	1 1/8	10T	*	*	*	*
8	327"	5.4	69	Chevrolet eng.	K5473-01		11	1 1/8	10T	*	*	*	*
	350"	5.7	74-69	Chevrolet eng.	K1862-01	2	12	1 1/8	10T	*	*	*	*
				Optional Kit/Diaph. Cover	K1909-02		12	1 1/8	10T	*	*	*	*
				Optional Kit/Diaph. w/ HD Disc	K1909-02HD		12	1 1/8	10T	*	*	*	*
				Optional Kit/Diaph. w/ CB Disc	K1909-02CB		12	1 1/8	10T	*	*	*	*
				Optional Kit/Diaph. w/ Kevlar® Disc	K1909-02KL		12	1 1/8	10T	*	*	*	*
CHEVROLET													
AVEO													
4	98"	1.6	11-04		K70265-01		8 1/2	13/16	24T	*	SH5348	SH6465	NFW9150
AVEO5													
4	98"	1.6	11-07		K70265-01		8 1/2	13/16	24T	*	SH5348	SH6465	NFW9150
BEL AIR													
6	230"	3.8	65-63		K1874-06	28	10	1 1/8	10T	*	*	*	*
	235"	3.8	62-55	11" Clutch	K5473-01	28	11	1 1/8	10T	*	*	*	*
				10 1/2" Clutch	K1510-02	2,28	10 1/2	1 1/8	10T	*	*	*	*
				Optional Kit/Diaph. Cover	K1675-10	28	10 1/2	1 1/8	10T	*	*	*	*
			54		K1874-06	28	10	1 1/8	10T	*	*	*	*
			53-50		K1042-01	28	9 1/8	1 1/8	10T	*	*	*	*
	250"	4.1	73-72	3 Spd., 10 1/2" Clutch	K1874-02	28	10 1/2	1 1/8	10T	*	*	*	*
			71-66	10" Clutch	K1874-06	28	10	1 1/8	10T	*	*	*	*
				HD, 11" Clutch	K5473-01	28	11	1 1/8	10T	*	*	*	*
8	265"	4.3	57-56	11" Clutch	K5473-01	28	11	1 1/8	10T	*	*	*	*
			57-55	10 1/2" Clutch	K1510-02	2,28	10 1/2	1 1/8	10T	*	*	*	*
				Optional Kit/Diaph. Cover	K1675-10	28	10 1/2	1 1/8	10T	*	*	*	*
	283"	4.6	67-57	10" Clutch	K1874-06	28	10	1 1/8	10T	*	*	*	*
				10 1/2" Clutch	K1510-02	2,28	10 1/2	1 1/8	10T	*	*	*	*
				Optional Kit/Diaph. Cover	K1675-10	28	10 1/2	1 1/8	10T	*	*	*	*
			58-57	11" Clutch	K5473-01	28	11	1 1/8	10T	*	*	*	*
	327"	5.3	69-62	10 1/2" Clutch	K1675-10	28	10 1/2	1 1/8	10T	*	*	*	*
	348"	5.7	61-59	12" Clutch	K1862-01	2	12	1 1/8	10T	*	*	*	*
			61-58	10 1/2" Clutch	K1862-06	2,28	10 1/2	1 1/8	10T	*	*	*	*
				11" Clutch	K5473-01	28	11	1 1/8	10T	*	*	*	*
	350"	5.7	71-69	10 1/2" Clutch	K1675-10	28	10 1/2	1 1/8	10T	*	*	*	*
	409"	6.7	64-62		K1675-10	28	10 1/2	1 1/8	10T	*	*	*	NFW1017
BERETTA													
4	134"	2.2	96-95		K70156-01 Š		8 1/2	1	14T	*	SH5042	SB60310	NFW1006
	140"	2.3	94-93	QUAD 4	K0059-03 Š	52	9 1/8	1	14T	*	SH5042	SB60082	*
			92-90	QUAD 4	K0059-01	29,36,38	9 1/8	1	14T	*	SH5044	SH6040	*
6	173"	2.8	89		K0059-01	29,36,38	9 1/8	1	14T	*	SH5044	SH6040	NFW1006
			88-87	Isuzu trans., 4.85" Master Cyl. Push Rod	K70083-01	29,38	9 1/8	1	14T	*	SH5044	*	NFW1006
				Muncie trans., 4.85" Master Cyl. Push Rod	K0059-01	29,38	9 1/8	1	14T	*	SH5044	*	NFW1006
				Isuzu trans., 5.00" Master Cyl. Push Rod	K70083-01	29,38	9 1/8	1	14T	*	SH5097	*	NFW1006

* Not Available
Ø Components Available
Š Kit Includes Concentric Slave Cylinder
ƒ Kit Includes Flywheel

© 2014 ZF North American Operations, Inc. All Rights Reserved. No portion of this work may be reproduced or copied by any means without the prior approval of ZF North American Operations, Inc.

SACHS

CLUTCH KIT

Cyl.	CC Cubic Inch	Liter	Year	Application Information	Clutch Kit	Notes Pg.180	Disc Size O.D.	Disc Size I.D.	Disc Size Teeth	PreFilled Master Or System	Master Cylinder	Slave Cylinder	Flywheel
CHEVROLET (Cont'd)													
BERETTA (Cont'd)													
6	173"	2.8	88-87	Muncie trans., 5.00" Master Cyl.	K0059-01	29,38	9 1/8	1	14T	*	SH5097	*	NFW1006
				Push Rod									
	189"	3.1	94-93		K0059-03 Š	52	9 1/8	1	14T	*	SH5042	SB60082	NFW1006
			92-90		K0059-01	29,36,38	9 1/8	1	14T	*	SH5044	SH6040	NFW1006
BISCAYNE													
6	230"	3.8	65-63		K1874-06	28	10	1 1/8	10T	*	*	*	*
	235"	3.8	62-58	10 1/2" Clutch	K1510-02	2,28	10 1/2	1 1/8	10T	*	*	*	*
				Optional Kit/Diaph. Cover	K1675-10	28	10 1/2	1 1/8	10T	*	*	*	*
				11" Clutch	K5473-01	28	11	1 1/8	10T	*	*	*	*
	250"	4.1	72	3 Spd., 10 1/2" Clutch	K1874-02	28	10 1/2	1 1/8	10T	*	*	*	*
			71-66	10" Clutch	K1874-06	28	10	1 1/8	10T	*	*	*	*
				HD, 11" Clutch	K5473-01	28	11	1 1/8	10T	*	*	*	*
8	283"	4.6	67-58	10" Clutch	K1874-06	28	10	1 1/8	10T	*	*	*	*
				10 1/2" Clutch	K1510-02	2,28	10 1/2	1 1/8	10T	*	*	*	*
				Optional Kit/Diaph. Cover	K1675-10	28	10 1/2	1 1/8	10T	*	*	*	*
			58	11" Clutch	K5473-01	28	11	1 1/8	10T	*	*	*	*
	327"	5.3	69-62	10 1/2" Clutch	K1675-10	28	10 1/2	1 1/8	10T	*	*	*	*
	348"	5.7	61-59	12" Clutch	K1862-01	2	12	1 1/8	10T	*	*	*	*
			61-58	10 1/2" Clutch	K1862-06	2,28	10 1/2	1 1/8	10T	*	*	*	*
				11" Clutch	K5473-01	28	11	1 1/8	10T	*	*	*	*
	350"	5.7	71-69	10 1/2" Clutch	K1675-10	28	10 1/2	1 1/8	10T	*	*	*	*
	409"	6.7	64-62		K1675-10	28	10 1/2	1 1/8	10T	*	*	*	NFW1017
CAMARO													
4	151"	2.5	86-84	5 Spd.	K1902-03	9,28	9 1/8	1	14T	*	SH5045	SH6091	NFW1006
				Optional Kit/Non-Cam Hub Disc	K1902-01	28	9 1/8	1	14T	*	SH5045	SH6091	*
			84	4 Spd.	K1902-02	28	9 1/8	1 1/8	10T	*	SH5045	SH6091	*
			83-82	4 Spd.	K1902-02	28	9 1/8	1 1/8	10T	*	*	*	*
				5 Spd.	K1902-01	28,36	9 1/8	1	14T	*	*	*	*
6	173"	2.8	89-85	5 Spd.	K1902-03	9,28,36	9 1/8	1	14T	*	SH5045	SH6091	*
				Optional Kit/Non-Cam Hub Disc	K1902-01	28,36	9 1/8	1	14T	*	SH5045	SH6091	*
	189"	3.1	92-90		K1902-01	28,36	9 1/8	1	14T	SPH002	SH5045	SH6091	NFW7224
	207"	3.4	95	CMC Pushrod Stamped CV601A	K70084-01	28	9 11/16	1 1/8	26T	SPH002	SH5147	SH6132	NFW7224
				CMC Pushrod Stamped H603A	K70084-01	28	9 11/16	1 1/8	26T	SPH002	SH5148	SH6132	NFW7224
			94-93		K70084-01	28	9 11/16	1 1/8	26T	SPH002	SH5147	SH6132	NFW7224
	217"	3.6	13-12		*					*	*	SB60215	*
			11-10		K70633-01		10 1/8	1	23T	*	*	SB60215	*
	230"	3.8	69-67		K1874-06	28	10	1 1/8	10T	*	*	*	*
	231"	3.8	02-98		K70184-01 ⚜	54	9 11/16	1 1/8	26T	*	SH5182	SH6133WB	*
				Slave Cylinder w/o Bearing	K70184-01	54	9 11/16	1 1/8	26T	*	SH5182	SH6133	*
			97-96		K70184-01 ⚜	54	9 11/16	1 1/8	26T	*	SH5148	SH6133WB	*
				Slave Cylinder w/o Bearing	K70184-01	54	9 11/16	1 1/8	26T	*	SH5148	SH6133	*
			81-80		K1675-10	28	10 1/2	1 1/8	10T	*	*	*	NFW1017
	250"	4.1	79		K1675-10	28	10 1/2	1 1/8	10T	*	*	*	NFW1017
			78-67		K1874-06	28	10	1 1/8	10T	*	*	*	NFW1017

⚜ Slave cylinder includes bearing (not Included in Clutch Kit)

* Not Available
Ø Components Available
Š Kit Includes Concentric Slave Cylinder
ƒ Kit Includes Flywheel

© 2014 ZF North American Operations, Inc. All Rights Reserved. No portion of this work may be reproduced or copied by any means without the prior approval of ZF North American Operations, Inc.

CLUTCH KIT

Cyl.	CC Cubic Inch	Liter	Year	Application Information	Clutch Kit	Notes Pg.180	Disc Size O.D.	Disc Size I.D.	Disc Size Teeth	PreFilled Master Or System	Master Cylinder	Slave Cylinder	Flywheel
CHEVROLET (Cont'd)													
CAMARO (Cont'd)													
8	302"	4.9	69-68		K1675-10	28	10 1/2	1 1/8	10T	*	*	*	NFW1017
	305"	5.0	92-88	8th Digit of VIN # E	K1675-21	28,36	10 1/2	1 1/8	26T	*	SH5045	SH6091	NFW1004
				Optional Power Clutch Kit	PC1675-21	28,36	10 1/2	1 1/8	26T	*	SH5045	SH6091	NFW1004
			92-87	8th Digit of VIN # F	K1675-21	28,36	10 1/2	1 1/8	26T	*	SH5045	SH6091	NFW1004
				Optional Power Clutch Kit	PC1675-21	28,36	10 1/2	1 1/8	26T	*	SH5045	SH6091	NFW1004
			87-86	8th Digit of VIN # H	K1675-21	28	10 1/2	1 1/8	26T	*	SH5045	SH6091	NFW1004
				Optional Power Clutch Kit	PC1675-21	28	10 1/2	1 1/8	26T	*	SH5045	SH6091	NFW1004
			86	8th Digit of VIN # G	K1675-21	28	10 1/2	1 1/8	26T	*	SH5045	SH6091	NFW1004
				Optional Power Clutch Kit	PC1675-21	28	10 1/2	1 1/8	26T	*	SH5045	SH6091	NFW1004
			85-84	Replaces O.E. 10" Clutch, Hydraulic Rel.	K1675-21	28	10 1/2	1 1/8	26T	*	SH5045	SH6091	NFW1017
				Optional Power Clutch Kit	PC1675-21	28	10 1/2	1 1/8	26T	*	SH5045	SH6091	NFW1017
			83-82	Mechanical Rel.	K1675-21	1,28	10 1/2	1 1/8	26T	*	*	*	NFW1017
				Optional Power Clutch Kit	PC1675-21	1,28	10 1/2	1 1/8	26T	*	*	*	NFW1017
			81	Z28	K1877-04	28	11	1 1/8	26T	*	*	*	NFW1007
			81-79	4 Spd. (exc. Z28)	K1675-10	28	10 1/2	1 1/8	10T	*	*	*	NFW1017
			78-77	Original B&B Style w/ Flat Diaph.	K1874-02	28	10 1/2	1 1/8	10T	*	*	*	NFW1017
			78-76	Bent Diaph.	K1675-10	28	10 1/2	1 1/8	10T	*	*	*	NFW1017
	307"	5.0	73-68	3 Spd.	K1874-02	28	10 1/2	1 1/8	10T	*	*	*	*
	327"	5.3	68-67		K1675-10	28	10 1/2	1 1/8	10T	*	*	*	*
	350"	5.7	02-98		K70185-01 ƒ ⅄ ◎	54,65	11 3/4	1 1/8	26T	*	SH5182	SH6133WB	*
				Slave Cylinder w/o Bearing	K70185-01 ƒ ◎	54,65	11 3/4	1 1/8	26T	*	SH5182	SH6133	*
			97-93	LT1 eng., CMC Pushrod Stamped H603A	K70043-01	28,54	11	1 1/8	26T	SPH002	SH5148	SH6132	*
			92-87	Replaces O.E. 10" Clutch	K1675-21	1,28,36	10 1/2	1 1/8	26T	*	*	*	*
				Optional Power Clutch Kit	PC1675-21	1,28,36	10 1/2	1 1/8	26T	*	*	*	*
			80-77	Muncie/M21 trans.	K1877-04	28	11	1 1/8	26T	*	*	*	NFW1007
			79-77	Muncie/M20 trans.	K1675-10	28	10 1/2	1 1/8	10T	*	*	*	NFW1017
			77-71	Saginaw/M21 trans.	K1675-10	28	10 1/2	1 1/8	10T	*	*	*	NFW1017
			70-69	Saginaw/M21 trans.	K1675-10	28	10 1/2	1 1/8	10T	*	*	*	*
	376"	6.2	13-10	SS	K70411-01 Š		11 3/4	1 1/8	26T	*	*	SB60210	*
CAPRICE													
6	250"	4.1	69-67	10" Clutch	K1874-06	28	10	1 1/8	10T	*	*	*	*
				HD, 11" Clutch	K5473-01	28	11	1 1/8	10T	*	*	*	*
8	283"	4.6	67-66	10" Clutch	K1874-06	28	10	1 1/8	10T	*	*	*	*
				10 1/2" Clutch	K1510-02	2,28	10 1/2	1 1/8	10T	*	*	*	*
				Optional Kit/Diaph. Cover	K1675-10	28	10 1/2	1 1/8	10T	*	*	*	*
	327"	5.3	69-66	10 1/2" Clutch	K1675-10	28	10 1/2	1 1/8	10T	*	*	*	*
	350"	5.7	71-69	10 1/2" Clutch	K1675-10	28	10 1/2	1 1/8	10T	*	*	*	*
CAVALIER													
4	112"	1.8	82		K1896-01 ◎		8	1	14T	*	*	*	NFW1006
	122"	2.0	87	4 Spd.	K1914-01		9 1/8	1	14T	*	SH5040	*	NFW1006
			86-85	4 Spd.	K1914-01		9 1/8	1	14T	*	SH5039	*	NFW1006
	134"	2.2	05-02	8th Digit of VIN # F	K70330-01 Š ◎		8 13/16	1	14T	*	SH5422	SB60139	NFW9123

⅄ Slave cylinder includes bearing (not Included in Clutch Kit)
◎ Kit Only

* Not Available
Ø Components Available
Š Kit Includes Concentric Slave Cylinder
ƒ Kit Includes Flywheel

© 2014 ZF North American Operations, Inc. All Rights Reserved. No portion of this work may be reproduced or copied by any means without the prior approval of ZF North American Operations, Inc.

SACHS

CLUTCH KIT

Cyl.	CC Cubic Inch	Liter	Year	Application Information	Clutch Kit	Notes Pg.180	Disc Size O.D.	Disc Size I.D.	Disc Size Teeth	PreFilled Master Or System	Master Cylinder	Slave Cylinder	Flywheel
CHEVROLET (Cont'd)													
CAVALIER (Cont'd)													
4	134"	2.2	02-00	8th Digit of VIN # 4	K70315-01 Š	52	8 1/2	1	14T	*	SH5422	SB60139	NFW1006
			99-95		K70156-01 Š	52	8 1/2	1	14T	*	SH5099	SB60310	NFW1006
	138"	2.3	95		K70163-01 Š	52	8 7/8	1	14T	*	SH5099	SB60310	*
	146"	2.4	02-00		K70258-01 Š		8 7/8	1	14T	*	SH5422	SB60139	*
			99-96	MJ1 eng.	K70163-01 Š	52	8 7/8	1	14T	*	SH5099	SB60310	*
6	173"	2.8	89		K0059-01	29,36	9 1/8	1	14T	SPH016	SH5040	SH6040	NFW1006
			88-87		K0059-01	29	9 1/8	1	14T	SPH016	SH5040	*	NFW1006
			86-85		K1914-01		9 1/8	1	14T	*	SH5039	*	NFW1006
	191"	3.1	94-93		K0059-03 Š	52	9 1/8	1	14T	*	SH5042	SB60082	NFW1006
			92-90		K0059-01	29,36	9 1/8	1	14T	SPH020	SH5040	SH6040	NFW1006
CAVALIER (CANADA ONLY)													
4	145"	2.4	99-96	MK7 trans.	K70156-01 Š		8 1/2	1	14T	*	SH5099	SB60310	NFW1006
CELEBRITY													
4	151"	2.5	86-84		K1914-01		9 1/8	1	14T	*	*	*	*
6	173"	2.8	89-87		K0059-01	29	9 1/8	1	14T	*	SH5419	*	NFW1006
			86		K1914-01		9 1/8	1	14T	*	*	*	NFW1006
			85-84		K1914-01		9 1/8	1	14T	*	*	*	NFW1006
CHEVELLE													
6	194"	3.2	66-64		K1874-06	28	10	1 1/8	10T	*	*	*	*
	230"	3.8	69-66	10" Clutch	K1874-06	28	10	1 1/8	10T	*	*	*	*
			65-64	10 1/2" Clutch	K1874-02		10 1/2	1 1/8	10T	*	*	*	*
	250"	4.1	73-67		K1874-06	28	10	1 1/8	10T	*	*	*	*
8	283"	4.6	67-64	3 Spd.	K1874-02	28	10 1/2	1 1/8	10T	*	*	*	*
				4 Spd.	K1675-10	28	10 1/2	1 1/8	10T	*	*	*	*
	307"	5.0	73-68	3 Spd.	K1874-02	28	10 1/2	1 1/8	10T	*	*	*	*
				Optional Kit/Diaph. Cover	K1675-10	28	10 1/2	1 1/8	10T	*	*	*	*
			71-68	4 Spd.	K1675-10	28	10 1/2	1 1/8	10T	*	*	*	*
	327"	5.3	68-64	Saginaw trans.	K1675-10	28	10 1/2	1 1/8	10T	*	*	*	NFW1017
	350"	5.7	73-69	10 1/2" Clutch	K1675-10	28	10 1/2	1 1/8	10T	*	*	*	NFW1017
CHEVETTE													
4	85"	1.4	77-76		K1880-01		7	1	14T	*	*	*	*
	98"	1.6	87-86		K1912-20 ◎		8	1	14T	*	*	*	*
			81-76		K1880-01		7	1	14T	*	*	*	*
	110"	1.8	86-81		KF583-03		7 7/8	1	24T	*	*	*	*
CHEVY II													
4	153"	2.5	67-63		K1874-06	28	10	1 1/8	10T	*	*	*	*
6	194"	3.2	67-62		K1874-06	28	10	1 1/8	10T	*	*	*	*
	230"	3.8	68		K1874-06	28	10	1 1/8	10T	*	*	*	*
			66-65		K1874-02		10 1/2	1 1/8	10T	*	*	*	*
	250"	4.1	68-67		K1874-06	28	10	1 1/8	10T	*	*	*	*
8	283"	4.6	67-66	10 1/2" Clutch	K1675-10	28	10 1/2	1 1/8	10T	*	*	*	NFW1017
			67-64	10" Clutch	K1874-06	28	10	1 1/8	10T	*	*	*	NFW1017
	307"	5.0	68		K1874-02	28	10 1/2	1 1/8	10T	*	*	*	NFW1017
	327"	5.3	68-65		K1675-10	28	10 1/2	1 1/8	10T	*	*	*	NFW1017

◎ Kit Only

* Not Available
Ø Components Available
Š Kit Includes Concentric Slave Cylinder
ƒ Kit Includes Flywheel

© 2014 ZF North American Operations, Inc. All Rights Reserved. No portion of this work may be reproduced or copied by any means without the prior approval of ZF North American Operations, Inc.

CLUTCH KIT

Cyl.	CC Cubic Inch	Liter	Year	Application Information	Clutch Kit	Notes Pg.180	Disc Size O.D.	Disc Size I.D.	Disc Size Teeth	PreFilled Master Or System	Master Cylinder	Slave Cylinder	Flywheel
CHEVROLET (Cont'd)													
CITATION													
4	151"	2.5	85-80	Replaces O.E. 9 11/16" Clutch	K1914-01		9 1/8	1	14T	*	*	*	*
6	173"	2.8	85-80	Replaces O.E. 9 11/16" Clutch	K1914-01		9 1/8	1	14T	*	*	*	*
COBALT													
4	122"	2.0	10-08	SS Turbo	SK70405-1		9 7/16	1	14T	*	SH5303	*	*
			07-05	SS	K70403-01 Š		9 7/16	1	14T	*	SH5303	SB60203	*
	134"	2.2	10-05		K70412-01 Š◎		8 7/8	1	14T	*	SH5303	SB60211	NFW9123
	145"	2.4	08-06		K70412-01 Š◎		8 7/8	1	14T	*	SH5303	SB60211	NFW9123
CORSICA													
4	134"	2.2	96-95		K70156-01 Š		8 1/2	1	14T	*	SH5042	SB60310	NFW1006
6	173"	2.8	89		K0059-01	29,36,38	9 1/8	1	14T	*	SH5044	SH6040	NFW1006
			88-87	Isuzu trans., 4.85" Master Cyl. Push Rod	K70083-01	29,38	9 1/8	1	14T	*	SH5044	*	NFW1006
				Muncie trans., 4.85" Master Cyl. Push Rod	K0059-01	29,38	9 1/8	1	14T	*	SH5044	*	NFW1006
				Isuzu trans., 5.00" Master Cyl. Push Rod	K70083-01	29,38	9 1/8	1	14T	*	SH5097	*	NFW1006
				Muncie trans., 5.00" Master Cyl. Push Rod	K0059-01	29,38	9 1/8	1	14T	*	SH5097	*	NFW1006
	189"	3.1	94-93		K0059-03 Š	52	9 1/8	1	14T	*	SH5042	SB60082	NFW1006
			92-90		K0059-01	29,36,38	9 1/8	1	14T	*	SH5044	SH6040	NFW1006
CORVETTE													
8	265"	4.3	56		K1874-06		10	1 1/8	10T	*	*	*	*
	283"	4.6	61-58	Fuel Injected	K1874-02	28	10 1/2	1 1/8	10T	*	*	*	*
			61-57	Carbureted	K1510-05	2,28	10	1 1/8	10T	*	*	*	*
	327"	5.3	68-65		K1675-10	28	10 1/2	1 1/8	10T	*	*	*	*
			64-62		K1675-04	28	10	1 1/8	10T	*	*	*	*
	350"	5.7	04-97		K70185-01 ƒ ⅄◎	54,65	11 3/4	1 1/8	26T	*	SH5180	SH6154WB	*
				Slave Cylinder w/o Bearing	K70185-01 ƒ◎	54,65	11 3/4	1 1/8	26T	*	SH5180	SH6154	*
			96-89	LT1, LT4, L98 eng.	*	28,54				*	*	SH6343	*
			95-90	LT5 eng.	*	54				*	*	SH6343	*
			88-86		K1911-01	28	10 3/4	1 1/8	26T	*	SH5109	SH6041	NFW1004
			85		K1911-01	28	10 3/4	1 1/8	26T	*	SH5109	SH6041	NFW1017
			84		K1675-21	28	10 1/2	1 1/8	26T	*	SH5109	SH6041	NFW1017
				Optional Power Clutch Kit	PC1675-21	28	10 1/2	1 1/8	26T	*	SH5109	SH6041	NFW1017
			78	exc. special high performance	K1675-10	28	10 1/2	1 1/8	10T	*	*	*	NFW1017
			72	4 Spd., 4 bbl.	K1675-21	28	10 1/2	1 1/8	26T	*	*	*	*
				Optional Power Clutch Kit	PC1675-21	28	10 1/2	1 1/8	26T	*	*	*	*
			71-69	10 1/2" Clutch	K1675-10	28	10 1/2	1 1/8	10T	*	*	*	NFW1017
	364"	6.0	07-05	6 Spd.	K70411-01 Š		11 3/4	1 1/8	26T	*	*	SB60210	*
	376"	6.2	13-09	ZR1	K70628-01 ◎♈		11 3/4	1 1/8	26T	*	*	*	*
			13-08	Base, Grand Sport	K70411-01 Š		11 3/4	1 1/8	26T	*	*	SB60210	*
	427"	7.0	13-06		K70411-01 Š		11 3/4	1 1/8	26T	*	*	SB60210	*
			69-66	10 1/2" Clutch	K1675-10	28	10 1/2	1 1/8	10T	*	*	*	NFW1017

⅄ Slave cylinder includes bearing (not Included in Clutch Kit)
◎ Kit Only
♈ Kit does not include Concentric Slave Cylinder and/or Release Bearing (Sold Separately)

* Not Available
Ø Components Available
Š Kit Includes Concentric Slave Cylinder
ƒ Kit Includes Flywheel

© 2014 ZF North American Operations, Inc. All Rights Reserved. No portion of this work may be reproduced or copied by any means without the prior approval of ZF North American Operations, Inc.

SACHS

CLUTCH KIT

Cyl.	CC Cubic Inch	Liter	Year	Application Information	Clutch Kit	Notes Pg.180	Disc Size O.D.	Disc Size I.D.	Disc Size Teeth	PreFilled Master Or System	Master Cylinder	Slave Cylinder	Flywheel
CHEVROLET (Cont'd)													
CRUZE													
4	83"	1.4	13		*					*	SH5538	SB60315	*
			12-11	Turbo	K70626-01		8 15/32	25/32	20T	*	SH5538	SB60315	*
	110"	1.8	13		*					*	SH5538	SB60315	*
			12-11		K70626-01		8 15/32	25/32	20T	*	SH5538	SB60315	*
EL CAMINO													
6	194"	3.2	65-64		K1874-06	28	10	1 1/8	10T	*	*	*	*
	200"	3.3	79		K1675-10	28	10 1/2	1 1/8	10T	*	*	*	NFW1017
			78		K1874-02	28	10 1/2	1 1/8	10T	*	*	*	*
	229"	3.8	81-80		K1675-10		10 1/2	1 1/8	10T	*	*	*	NFW1017
	230"	3.8	69-66		K1874-06	28	10	1 1/8	10T	*	*	*	*
			65-64		K1874-02		10 1/2	1 1/8	10T	*	*	*	*
	231"	3.8	81-78		K1874-02	28	10 1/2	1 1/8	10T	*	*	*	NFW1017
				HD (Replaces OE 11" Clutch)	K5473-01		11	1 1/8	10T	*	*	*	*
	250"	4.1	77-67		K1874-06	28	10	1 1/8	10T	*	*	*	*
8	267"	4.4	81-79		K1675-10	28	10 1/2	1 1/8	10T	*	*	*	*
	283"	4.6	67-64	3 Spd.	K1874-02	28	10 1/2	1 1/8	10T	*	*	*	*
				4 Spd.	K1675-10	28	10 1/2	1 1/8	10T	*	*	*	*
			60-59	3 Spd.	K1874-02		10 1/2	1 1/8	10T	*	*	*	*
				4 Spd.	K1675-10		10 1/2	1 1/8	10T	*	*	*	*
	305"	5.0	81-79		K1675-10	28	10 1/2	1 1/8	10T	*	*	*	*
			78-76		K1874-02	28	10 1/2	1 1/8	10T	*	*	*	*
	307"	5.0	73-68	3 Spd.	K1874-02	28	10 1/2	1 1/8	10T	*	*	*	*
			71-68	4 Spd.	K1675-10	28	10 1/2	1 1/8	10T	*	*	*	*
	327"	5.3	67-66	Saginaw trans.	K1675-10	28	10 1/2	1 1/8	10T	*	*	*	NFW1017
	348"	5.7	60-59		K1675-10		10 1/2	1 1/8	10T	*	*	*	*
	350"	5.7	79		K1675-10		10 1/2	1 1/8	10T	*	*	*	*
			78-69	exc. 4 Spd.	K1675-10	28	10 1/2	1 1/8	10T	*	*	*	NFW1017
IMPALA													
6	230"	3.8	65-63		K1874-06	28	10	1 1/8	10T	*	*	*	*
	235"	3.8	62-59	10 1/2" Clutch	K1510-02	2,28	10 1/2	1 1/8	10T	*	*	*	*
				Optional Kit/Diaph. Cover	K1675-10	28	10 1/2	1 1/8	10T	*	*	*	*
				11" Clutch	K5473-01	28	11	1 1/8	10T	*	*	*	*
	250"	4.1	73-72	3 Spd., 10 1/2" Clutch	K1874-02	28	10 1/2	1 1/8	10T	*	*	*	*
			71-66	10" Clutch	K1874-06	28	10	1 1/8	10T	*	*	*	*
				HD, 11" Clutch	K5473-01	28	11	1 1/8	10T	*	*	*	*
8	283"	4.6	67-59	10" Clutch	K1874-06	28	10	1 1/8	10T	*	*	*	*
				10 1/2" Clutch	K1510-02	2,28	10 1/2	1 1/8	10T	*	*	*	*
				Optional Kit/Diaph. Cover	K1675-10	28	10 1/2	1 1/8	10T	*	*	*	*
	327"	5.3	69-62	10 1/2" Clutch	K1675-10	28	10 1/2	1 1/8	10T	*	*	*	*
	348"	5.7	61-59	10 1/2" Clutch	K1862-06	2,28	10 1/2	1 1/8	10T	*	*	*	*
				11" Clutch	K5473-01	28	11	1 1/8	10T	*	*	*	*
				12" Clutch	K1862-01	2	12	1 1/8	10T	*	*	*	*
	350"	5.7	71-69	10 1/2" Clutch	K1675-10	28	10 1/2	1 1/8	10T	*	*	*	*
	409"	6.7	64-62		K1675-10	28	10 1/2	1 1/8	10T	*	*	*	NFW1017

* Not Available
Ø Components Available
Š Kit Includes Concentric Slave Cylinder
ƒ Kit Includes Flywheel

© 2014 ZF North American Operations, Inc. All Rights Reserved. No portion of this work may be reproduced or copied by any means without the prior approval of ZF North American Operations, Inc.

CLUTCH KIT

Cyl.	CC Cubic Inch	Liter	Year	Application Information	Clutch Kit	Notes Pg.180	Disc Size O.D.	Disc Size I.D.	Disc Size Teeth	PreFilled Master Or System	Master Cylinder	Slave Cylinder	Flywheel
CHEVROLET (Cont'd)													
LUMINA													
6	189"	3.1	90		K0059-01	29	9 1/8	1	14T	*	*	*	NFW1006
	207"	3.4	94-91	Pull Type	K70045-01 ◎		9 11/16	1	23T	*	*	SH6152	NFW1025
MALIBU													
6	194"	3.2	66-64		K1874-06	28	10	1 1/8	10T	*	*	*	*
	200"	3.3	79		K1675-10	28	10 1/2	1 1/8	10T	*	*	*	NFW1017
			78		K1874-02	28	10 1/2	1 1/8	10T	*	*	*	*
	229"	3.8	81-80		K1675-10		10 1/2	1 1/8	10T	*	*	*	NFW1017
	230"	3.8	67-66	10" Clutch	K1874-06	28	10	1 1/8	10T	*	*	*	*
			65-64	10 1/2" Clutch	K1874-02		10 1/2	1 1/8	10T	*	*	*	*
	231"	3.8	81-78		K1874-02	28	10 1/2	1 1/8	10T	*	*	*	NFW1017
				HD, Replaces O.E. 11" Clutch	K5473-01		11	1 1/8	10T	*	*	*	*
	250"	4.1	77-73		K1874-06	28	10	1 1/8	10T	*	*	*	*
			67		K1874-06	28	10	1 1/8	10T	*	*	*	*
8	267"	4.4	81-79		K1675-10	28	10 1/2	1 1/8	10T	*	*	*	*
	283"	4.6	67-64	3 Spd.	K1874-02	28	10 1/2	1 1/8	10T	*	*	*	*
				4 Spd.	K1675-10	28	10 1/2	1 1/8	10T	*	*	*	*
	305"	5.0	81-79		K1675-10	28	10 1/2	1 1/8	10T	*	*	*	*
			78-76		K1874-02	28	10 1/2	1 1/8	10T	*	*	*	*
	307"	5.0	73	4 Spd.	K1675-10	28	10 1/2	1 1/8	10T	*	*	*	*
	327"	5.3	67-64	Saginaw trans.	K1675-10	28	10 1/2	1 1/8	10T	*	*	*	NFW1017
	350"	5.7	79		K1675-10		10 1/2	1 1/8	10T	*	*	*	*
			78-73		K1675-10	28	10 1/2	1 1/8	10T	*	*	*	NFW1017
METRO													
3	61"	1.0	00-98		K0108-02		6 3/4	3/4	18T	*	*	*	NFW3302
4	79"	1.3	00-98		K0077-01		7 1/2	3/4	18T	*	*	*	*
MONTE CARLO													
6	200"	3.3	79		K1675-10	28	10 1/2	1 1/8	10T	*	*	*	NFW1017
			78		K1874-02	28	10 1/2	1 1/8	10T	*	*	*	*
	229"	3.8	81		K1675-10		10 1/2	1 1/8	10T	*	*	*	*
	231"	3.8	81	Turbo	K1675-10		10 1/2	1 1/8	10T	*	*	*	*
				Non-Turbo	K1874-02		10 1/2	1 1/8	10T	*	*	*	*
			79-78	Non-Turbo	K1874-02		10 1/2	1 1/8	10T	*	*	*	*
8	267"	4.4	81		K1675-10	28	10 1/2	1 1/8	10T	*	*	*	*
			79		K1675-10	28	10 1/2	1 1/8	10T	*	*	*	*
	305"	5.0	81		K1675-10	28	10 1/2	1 1/8	10T	*	*	*	*
			79		K1675-10	28	10 1/2	1 1/8	10T	*	*	*	*
			78-76		K1874-02	28	10 1/2	1 1/8	10T	*	*	*	*
	350"	5.7	77-70	10 1/2" Clutch	K1675-10	28	10 1/2	1 1/8	10T	*	*	*	NFW1017
MONZA													
4	140"	2.3	77-75	Replaces O.E. 8" Clutch	K1878-02		9 1/8	1 1/8	10T	*	*	*	*
	151"	2.5	80-78		K1878-02		9 1/8	1 1/8	10T	*	*	*	*
6	196"	3.2	78		K1878-02		9 1/8	1 1/8	10T	*	*	*	*
	231"	3.8	78		K1878-02		9 1/8	1 1/8	10T	*	*	*	*
8	262"	4.3	76-75		K1878-02		9 1/8	1 1/8	10T	*	*	*	*

◎ Kit Only

* Not Available
Ø Components Available
Š Kit Includes Concentric Slave Cylinder
ƒ Kit Includes Flywheel

© 2014 ZF North American Operations, Inc. All Rights Reserved. No portion of this work may be reproduced or copied by any means without the prior approval of ZF North American Operations, Inc.

SACHS

CLUTCH KIT

Cyl.	CC Cubic Inch	Liter	Year	Application Information	Clutch Kit	Notes Pg.180	Disc Size O.D.	Disc Size I.D.	Disc Size Teeth	PreFilled Master Or System	Master Cylinder	Slave Cylinder	Flywheel
CHEVROLET (Cont'd)													
NOVA													
4	98"	1.6	88-85		K0076-01		7 7/8	15/16	21T	*	SH5008	SH6037	NFW6926
	153"	2.5	67-63		K1874-06	28	10	1 1/8	10T	*	*	*	*
6	194"	3.2	67-62		K1874-02		10 1/2	1 1/8	10T	*	*	*	*
	230"	3.8	70-69		K1874-02		10 1/2	1 1/8	10T	*	*	*	*
			66-65		K1874-02		10 1/2	1 1/8	10T	*	*	*	*
	250"	4.1	79		K1675-10	28	10 1/2	1 1/8	10T	*	*	*	*
			78-69		K1874-02		10 1/2	1 1/8	10T	*	*	*	*
			67		K1874-02		10 1/2	1 1/8	10T	*	*	*	*
8	262"	4.3	75		K1874-06	28	10	1 1/8	10T	*	*	*	*
	283"	4.6	67-66	10 1/2" Clutch	K1675-10		10 1/2	1 1/8	10T	*	*	*	*
			67-64	10" Clutch	K1874-06	28	10	1 1/8	10T	*	*	*	NFW1017
	305"	5.0	79		K1675-10	28	10 1/2	1 1/8	10T	*	*	*	*
			78-76	3 Spd.	K1874-02	28	10 1/2	1 1/8	10T	*	*	*	*
	307"	5.0	73-69		K1874-02	28	10 1/2	1 1/8	10T	*	*	*	*
	327"	5.3	67-65		K1675-10	28	10 1/2	1 1/8	10T	*	*	*	NFW1017
		5.4	66-65		K1675-10	28	10 1/2	1 1/8	10T	*	*	*	NFW1017
	350"	5.7	79-69	3 Spd.	K1675-10	28	10 1/2	1 1/8	10T	*	*	*	NFW1017
PRIZM													
4	110"	1.8	02-98		K70079-03		8 3/8	15/16	21T	*	SH5204	SH6172	*
SONIC													
4	83"	1.4	13-12	Turbo	K70626-01		8 15/32	25/32	20T	*	*	*	*
	110"	1.8	13-12	Non-Turbo	K70629-01		8 5/64	5/8	14T	*	*	SB60254	*
SPECTRUM													
4	92"	1.5	88-87	Turbo	K0074-01 ◎	27	8 1/2	1	14T	*	*	*	*
			88-85	Non-Turbo	K0044-01	27	7 1/4	1	14T	*	*	*	*
SPRINT													
3	61"	1.0	88-87	Turbo	K0077-02		7 1/2	3/4	18T	*	*	*	*
			88-85	Non-Turbo	K0043-01		6 1/4	3/4	18T	*	*	*	NFW3302
SPRINT (CANADA ONLY)													
3	61"	1.0	90-89	Non-Turbo	K0077-01		7 1/2	3/4	18T	*	*	*	*
VEGA													
4	122"	2.0	76-75	exc. 3 Spd.	K1878-02		9 1/8	1 1/8	10T	*	*	*	*
	140"	2.3	77-73	Replaces O.E. 8" Clutch	K1878-02		9 1/8	1 1/8	10T	*	*	*	*
CHEVROLET LIGHT TRUCK													
ASTRO													
4	151"	2.5	90-85		K1902-03	9	9 1/8	1	14T	*	SH5379	SH6358	*
				Optional Kit/Non-Cam Hub Disc	K1902-01		9 1/8	1	14T	*	SH5379	SH6358	*
6	262"	4.3	90-86		K1877-08	9	11	1	14T	*	SH5379	SH6358	NFW1023
			85		K1877-08	9	11	1	14T	*	SH5379	SH6358	NFW1007
C, K, R, V, 10, 20, 30 SERIES, FULL SIZE BLAZER, SILVERADO, SUBURBAN, TRUCK													
6	230"	3.8	66-63	10" Clutch	K1874-06	28	10	1 1/8	10T	*	*	*	NFW1008
				11" Clutch	K5473-01	28	11	1 1/8	10T	*	*	*	NFW1007
				12" Clutch	K1862-01	2,28	12	1 1/8	10T	*	*	*	NFW1007
				Optional Kit/Diaph. Cover	K1909-02	28	12	1 1/8	10T	*	*	*	NFW1007
				Optional Kit/Diaph. w/ HD Disc	K1909-02HD	28	12	1 1/8	10T	*	*	*	NFW1007
				Optional Kit/Diaph. w/ CB Disc	K1909-02CB	28	12	1 1/8	10T	*	*	*	NFW1007

◎ Kit Only

* Not Available
Ø Components Available
Š Kit Includes Concentric Slave Cylinder
ƒ Kit Includes Flywheel

© 2014 ZF North American Operations, Inc. All Rights Reserved. No portion of this work may be reproduced or copied by any means without the prior approval of ZF North American Operations, Inc.

CLUTCH KIT

Cyl.	CC Cubic Inch	Liter	Year	Application Information	Clutch Kit	Notes Pg.180	Disc Size O.D.	Disc Size I.D.	Disc Size Teeth	PreFilled Master Or System	Master Cylinder	Slave Cylinder	Flywheel
CHEVROLET LIGHT TRUCK (Cont'd)													
C, K, R, V, 10, 20, 30 SERIES, FULL SIZE BLAZER, SILVERADO, SUBURBAN, TRUCK (Cont'd)													
6	230"	3.8	66-63	Optional Kit/Diaph. w/ Kevlar® Disc	K1909-02KL	28	12	1 1/8	10T	*	*	*	NFW1007
	235"	3.8	62-61	10" Clutch	K1874-06	28	10	1 1/8	10T	*	*	*	NFW1008
				11" Clutch	K5473-01	28	11	1 1/8	10T	*	*	*	NFW1007
				12" Clutch	K1862-01	2,28	12	1 1/8	10T	*	*	*	NFW1036
				Optional Kit/Diaph. Cover	K1909-02	28	12	1 1/8	10T	*	*	*	NFW1007
				Optional Kit/Diaph. w/ HD Disc	K1909-02HD	28	12	1 1/8	10T	*	*	*	NFW1007
				Optional Kit/Diaph. w/ CB Disc	K1909-02CB	28	12	1 1/8	10T	*	*	*	NFW1007
				Optional Kit/Diaph. w/ Kevlar® Disc	K1909-02KL	28	12	1 1/8	10T	*	*	*	NFW1007
	250"	4.1	84-77	11" Clutch	K1877-02	28	11	1 1/8	10T	*	*	*	NFW1007
				Optional Power Clutch Kit	PC1877-02	28	11	1 1/8	10T	*	*	*	NFW1007
				12" Clutch	K1862-01	2,28	12	1 1/8	10T	*	*	*	NFW1007
				Optional Kit/Diaph. Cover	K1909-02	28	12	1 1/8	10T	*	*	*	NFW1007
				Optional Kit/Diaph. w/ HD Disc	K1909-02HD	28	12	1 1/8	10T	*	*	*	NFW1007
				Optional Kit/Diaph. w/ CB Disc	K1909-02CB	28	12	1 1/8	10T	*	*	*	NFW1007
				Optional Kit/Diaph. w/ Kevlar® Disc	K1909-02KL	28	12	1 1/8	10T	*	*	*	NFW1007
			76-66	10" Clutch	K1874-06	28	10	1 1/8	10T	*	*	*	NFW1017
				11" Clutch	K5473-01	28	11	1 1/8	10T	*	*	*	NFW1007
	261"	4.3	62-61	11" Clutch	K5473-01	28	11	1 1/8	10T	*	*	*	NFW1007
				12" Clutch	K1862-01	2,28	12	1 1/8	10T	*	*	*	NFW1036
				Optional Kit/Diaph. Cover	K1909-02	28	12	1 1/8	10T	*	*	*	NFW1007
				Optional Kit/Diaph. w/ HD Disc	K1909-02HD	28	12	1 1/8	10T	*	*	*	NFW1007
				Optional Kit/Diaph. w/ CB Disc	K1909-02CB	28	12	1 1/8	10T	*	*	*	NFW1007
				Optional Kit/Diaph. w/ Kevlar® Disc	K1909-02KL	28	12	1 1/8	10T	*	*	*	NFW1007
			59-54	11" Clutch	K5473-01	28	11	1 1/8	10T	*	*	*	NFW1007
				12" Clutch	K1862-01	2,28	12	1 1/8	10T	*	*	*	NFW1036
				Optional Kit/Diaph. Cover	K1909-02	28	12	1 1/8	10T	*	*	*	NFW1007
				Optional Kit/Diaph. w/ HD Disc	K1909-02HD	28	12	1 1/8	10T	*	*	*	NFW1007
				Optional Kit/Diaph. w/ CB Disc	K1909-02CB	28	12	1 1/8	10T	*	*	*	NFW1007
				Optional Kit/Diaph. w/ Kevlar® Disc	K1909-02KL	28	12	1 1/8	10T	*	*	*	NFW1007
	262"	4.3	07-03	Silverado 1500, Kit w/ 47.5mm I.D. Release Bearing	K70285-02 ⅄		12	1 1/8	10T	*	SH5192	SH6443WB	NFW1055
				Slave Cylinder w/o Bearing	K70285-02		12	1 1/8	10T	*	SH5192	SH6443	NFW1055
			02-01	Silverado 1500, Kit w/ 47.5mm I.D. Release Bearing	K70285-02 ⅄		12	1 1/8	10T	*	SH5192	SH6163WB	NFW1055
				Slave Cylinder w/o Bearing	K70285-02		12	1 1/8	10T	*	SH5192	SH6163	NFW1055
			00-99	Silverado 1500, Kit w/ 36.11mm I.D. Release Bearing	K70285-01 ⅄		12	1 1/8	10T	*	SH5192	SH6133WB	NFW1055
				Slave Cylinder w/o Bearing	K70285-01		12	1 1/8	10T	*	SH5192	SH6133	NFW1055
			98-96		K70169-01 ⅄	9	11	1 1/8	10T	*	SH5192	SH6133WB	NFW1046
				Slave Cylinder w/o Bearing	K70169-01	9	11	1 1/8	10T	*	SH5192	SH6133	NFW1046
				Optional Kit/Non-Predamp Disc	K70169-02		11	1 1/8	10T	*	SH5192	SH6133	NFW1046
			95	Cast #14103282	K70375-01	1,9,28,32	11	1 1/8	10T	SPH044	SH5179	SH6092	NFW1046
				Optional Kit/HD Disc	K70375-01HD	1,28,32	11	1 1/8	10T	SPH044	SH5179	SH6092	NFW1046
				Cast #10218653	K70375-01	1,9,28,32	11	1 1/8	10T	SPH044	SH5179	SH6092	NFW1031
				Optional Kit/HD Disc	K70375-01HD	1,28,32	11	1 1/8	10T	SPH044	SH5179	SH6092	NFW1031

⅄ Slave cylinder includes bearing (not Included in Clutch Kit)

* Not Available
Ø Components Available
Š Kit Includes Concentric Slave Cylinder
ƒ Kit Includes Flywheel

© 2014 ZF North American Operations, Inc. All Rights Reserved. No portion of this work may be reproduced or copied by any means without the prior approval of ZF North American Operations, Inc.

SACHS

CLUTCH KIT

Cyl.	CC Cubic Inch	Liter	Year	Application Information	Clutch Kit	Notes Pg.180	Disc Size O.D.	Disc Size I.D.	Disc Size Teeth	PreFilled Master Or System	Master Cylinder	Slave Cylinder	Flywheel
CHEVROLET LIGHT TRUCK (Cont'd)													
C, K, R, V, 10, 20, 30 SERIES, FULL SIZE BLAZER, SILVERADO, SUBURBAN, TRUCK (Cont'd)													
6	262"	4.3	94-91	(fr. 2/91)	K70375-01	1,9,28,32	11	1 1/8	10T	SPH044	SH5179	SH6092	NFW1031
				Optional Kit/HD Disc	K70375-01HD	1,28,32	11	1 1/8	10T	SPH044	SH5179	SH6092	NFW1031
			91-88	(to 1/91)	K1877-09	9,28	11	1 1/8	10T	*	SH5379	SH6028	NFW1021
				Optional Kit/Non-Cam Hub Disc	K1877-02	28	11	1 1/8	10T	*	SH5379	SH6028	NFW1021
				Optional Power Clutch Kit	PC1877-02	28	11	1 1/8	10T	*	SH5379	SH6028	NFW1021
			87-86		K1877-09	9,28	11	1 1/8	10T	*	SH5032	SH6089	NFW1023
				Optional Kit/Non-Cam Hub Disc	K1877-02	28	11	1 1/8	10T	*	SH5032	SH6089	NFW1023
				Optional Power Clutch Kit	PC1877-02	28	11	1 1/8	10T	*	SH5032	SH6089	NFW1023
			85		K1877-09	9,28	11	1 1/8	10T	*	SH5032	SH6089	NFW1007
				Optional Kit/Non-Cam Hub Disc	K1877-02	28	11	1 1/8	10T	*	SH5032	SH6089	NFW1007
				Optional Power Clutch Kit	PC1877-02	28	11	1 1/8	10T	*	SH5032	SH6089	NFW1007
	292"	4.8	88-85		K1877-09	9,28	11	1 1/8	10T	*	SH5032	SH6089	NFW1036
			84-69	11" Clutch	K1877-02	28	11	1 1/8	10T	*	*	*	NFW1036
				Optional Power Clutch Kit	PC1877-02	28	11	1 1/8	10T	*	*	*	NFW1036
				12" Clutch	K1862-01	2,28	12	1 1/8	10T	*	*	*	NFW1036
				Optional Kit/Diaph. Cover	K1909-02	28	12	1 1/8	10T	*	*	*	NFW1007
				Optional Kit/Diaph. w/ HD Disc	K1909-02HD	28	12	1 1/8	10T	*	*	*	NFW1007
				Optional Kit/Diaph. w/ CB Disc	K1909-02CB	28	12	1 1/8	10T	*	*	*	NFW1007
				Optional Kit/Diaph. w/ Kevlar® Disc	K1909-02KL	28	12	1 1/8	10T	*	*	*	NFW1007
			68-63		K5473-01	28	11	1 1/8	10T	*	*	*	NFW1007
8	283"	4.6	67-57	11" Clutch	K5473-01	28	11	1 1/8	10T	*	*	*	*
				12" Clutch	K1862-01	2,28	12	1 1/8	10T	*	*	*	*
				Optional Kit/Diaph. Cover	K1909-02	28	12	1 1/8	10T	*	*	*	*
				Optional Kit/Diaph. w/ HD Disc	K1909-02HD	28	12	1 1/8	10T	*	*	*	*
				Optional Kit/Diaph. w/ CB Disc	K1909-02CB	28	12	1 1/8	10T	*	*	*	*
				Optional Kit/Diaph. w/ Kevlar® Disc	K1909-02KL	28	12	1 1/8	10T	*	*	*	*
	294"	4.8	06-03		K70318-01 ⅄		12	1 1/8	10T	*	SH5192	SH6443WB	NFW1050
				Slave Cylinder w/o Bearing	K70318-01		12	1 1/8	10T	*	SH5192	SH6443	NFW1050
			02-01		K70318-01 ⅄		12	1 1/8	10T	*	SH5192	SH6163WB	NFW1050
				Slave Cylinder w/o Bearing	K70318-01		12	1 1/8	10T	*	SH5192	SH6163	NFW1050
			00-99		K70318-02 ⅄		12	1 1/8	10T	*	SH5192	SH6133WB	*
				Slave Cylinder w/o Bearing	K70318-02		12	1 1/8	10T	*	SH5192	SH6133	*
	305"	5.0	99-96		K70149-01 ⅄	9	11 3/4	1 1/8	10T	*	SH5170	SH6133WB	NFW1023
				Slave Cylinder w/o Bearing	K70149-01	9	11 3/4	1 1/8	10T	*	SH5170	SH6133	NFW1023
			95-91	(fr. 2/91)	K70375-01	1,9,28,32	11	1 1/8	10T	SPH044	SH5179	SH6092	NFW1023
				Optional Kit/HD Disc	K70375-01HD	1,28,32	11	1 1/8	10T	SPH044	SH5179	SH6092	NFW1023
			91-88	(to 1/91)	K1877-09	9,28	11	1 1/8	10T	*	SH5379	SH6028	NFW1023
				Optional Kit/Non-Cam Hub Disc	K1877-02	28	11	1 1/8	10T	*	SH5379	SH6028	NFW1023
				Optional Power Clutch Kit	PC1877-02	28	11	1 1/8	10T	*	SH5379	SH6028	NFW1023
			87-86		K1877-09	9,28	11	1 1/8	10T	*	SH5032	SH6089	NFW1023
				Optional Kit/Non-Cam Hub Disc	K1877-02	28	11	1 1/8	10T	*	SH5032	SH6089	NFW1023
				Optional Power Clutch Kit	PC1877-02	28	11	1 1/8	10T	*	SH5032	SH6089	NFW1023
			85-76	11" Clutch	K1877-02	28	11	1 1/8	10T	*	*	*	NFW1007
				Optional Power Clutch Kit	PC1877-02	28	11	1 1/8	10T	*	*	*	NFW1007
				12" Clutch	K1862-01	2,28	12	1 1/8	10T	*	*	*	NFW1007
				Optional Kit/Diaph. Cover	K1909-02	28	12	1 1/8	10T	*	*	*	NFW1007

⅄ Slave cylinder includes bearing (not Included in Clutch Kit)

* Not Available
Ø Components Available
Š Kit Includes Concentric Slave Cylinder
ƒ Kit Includes Flywheel

© 2014 ZF North American Operations, Inc. All Rights Reserved. No portion of this work may be reproduced or copied by any means without the prior approval of ZF North American Operations, Inc.

CLUTCH KIT

Cyl.	CC Cubic Inch	Liter	Year	Application Information	Clutch Kit	Notes Pg.180	Disc Size O.D.	Disc Size I.D.	Disc Size Teeth	PreFilled Master Or System	Master Cylinder	Slave Cylinder	Flywheel
CHEVROLET LIGHT TRUCK (Cont'd)													
C, K, R, V, 10, 20, 30 SERIES, FULL SIZE BLAZER, SILVERADO, SUBURBAN, TRUCK (Cont'd)													
8	305"	5.0	85-76	Optional Kit/Diaph. w/ HD Disc	K1909-02HD	28	12	1 1/8	10T	*	*	*	NFW1007
				Optional Kit/Diaph. w/ CB Disc	K1909-02CB	28	12	1 1/8	10T	*	*	*	NFW1007
				Optional Kit/Diaph. w/ Kevlar® Disc	K1909-02KL	28	12	1 1/8	10T	*	*	*	NFW1007
	322"	5.3	59-56	12" Clutch	K1862-01	2,28	12	1 1/8	10T	*	*	*	*
				Optional Kit/Diaph. Cover	K1909-02	28	12	1 1/8	10T	*	*	*	*
				Optional Kit/Diaph. w/ HD Disc	K1909-02HD	28	12	1 1/8	10T	*	*	*	*
				Optional Kit/Diaph. w/ CB Disc	K1909-02CB	28	12	1 1/8	10T	*	*	*	*
				Optional Kit/Diaph. w/ Kevlar® Disc	K1909-02KL	28	12	1 1/8	10T	*	*	*	*
	327"	5.3	68-64	12" Clutch	K1862-01	2,28	12	1 1/8	10T	*	*	*	NFW1007
				Optional Kit/Diaph. Cover	K1909-02	28	12	1 1/8	10T	*	*	*	NFW1007
				Optional Kit/Diaph. w/ HD Disc	K1909-02HD	28	12	1 1/8	10T	*	*	*	NFW1007
				Optional Kit/Diaph. w/ CB Disc	K1909-02CB	28	12	1 1/8	10T	*	*	*	NFW1007
				Optional Kit/Diaph. w/ Kevlar® Disc	K1909-02KL	28	12	1 1/8	10T	*	*	*	NFW1007
			62	12" Clutch	K1862-01	2,28	12	1 1/8	10T	*	*	*	NFW1007
				Optional Kit/Diaph. Cover	K1909-02	28	12	1 1/8	10T	*	*	*	NFW1007
				Optional Kit/Diaph. w/ HD Disc	K1909-02HD	28	12	1 1/8	10T	*	*	*	NFW1007
				Optional Kit/Diaph. w/ CB Disc	K1909-02CB	28	12	1 1/8	10T	*	*	*	NFW1007
				Optional Kit/Diaph. w/ Kevlar® Disc	K1909-02KL	28	12	1 1/8	10T	*	*	*	NFW1007
	348"	5.7	59-58	12" Clutch	K1862-01	2,28	12	1 1/8	10T	*	*	*	*
				Optional Kit/Diaph. Cover	K1909-02	28	12	1 1/8	10T	*	*	*	*
				Optional Kit/Diaph. w/ HD Disc	K1909-02HD	28	12	1 1/8	10T	*	*	*	*
				Optional Kit/Diaph. w/ CB Disc	K1909-02CB	28	12	1 1/8	10T	*	*	*	*
				Optional Kit/Diaph. w/ Kevlar® Disc	K1909-02KL	28	12	1 1/8	10T	*	*	*	*
	350"	5.7	00-99		K70149-01 ⚑	9	11 3/4	1 1/8	10T	*	SH5170	SH6133WB	NFW1044
				Slave Cylinder w/o Bearing	K70149-01	9	11 3/4	1 1/8	10T	*	SH5170	SH6133	NFW1044
			98-97	C/K 1500	K70149-01 ⚑	9	11 3/4	1 1/8	10T	*	SH5170	SH6133WB	NFW1023
				Slave Cylinder w/o Bearing	K70149-01	9	11 3/4	1 1/8	10T	*	SH5170	SH6133	NFW1023
				C/K 2500 w/ NV4500/MW3 trans.	K70149-01 ⚑	9	11 3/4	1 1/8	10T	*	SH5170	SH6133WB	NFW1044
				Slave Cylinder w/o Bearing	K70149-01	9	11 3/4	1 1/8	10T	*	SH5170	SH6133	NFW1044
				C/K 2500 w/ NV3500/M50 trans.	K70149-01 ⚑	9	11 3/4	1 1/8	10T	*	SH5170	SH6133WB	NFW1023
				Slave Cylinder w/o Bearing	K70149-01	9	11 3/4	1 1/8	10T	*	SH5170	SH6133	NFW1023
			98-96	C/K 3500	K70149-01 ⚑	9	11 3/4	1 1/8	10T	*	SH5170	SH6133WB	NFW1044
				Slave Cylinder w/o Bearing	K70149-01	9	11 3/4	1 1/8	10T	*	SH5170	SH6133	NFW1044
			96	C/K 1500 & 2500	K70149-01 ⚑	9	11 3/4	1 1/8	10T	*	SH5170	SH6133WB	NFW1023
				Slave Cylinder w/o Bearing	K70149-01	9	11 3/4	1 1/8	10T	*	SH5170	SH6133	NFW1023
			95-91	(fr. 2/91)	K1909-06	9,32	11 3/4	1 1/8	10T	SPH044	SH5179	SH6092	NFW1023
				Optional Kit/HD Disc	K1909-06HD	9,32	11 7/8	1 1/8	10T	SPH044	SH5179	SH6092	NFW1023
				Optional Kit/Non-Cam Hub Disc	K1909-02	32	12	1 1/8	10T	SPH044	SH5179	SH6092	NFW1023
				Optional Kit/Non-Cam Hub HD Disc	K1909-02HD	32	12	1 1/8	10T	SPH044	SH5179	SH6092	NFW1023
				Optional Kit/Non-Cam Hub CB Disc	K1909-02CB	32	12	1 1/8	10T	SPH044	SH5179	SH6092	NFW1023
				Optional Kit/Non-Cam Hub Kevlar® Disc	K1909-02KL	32	12	1 1/8	10T	SPH044	SH5179	SH6092	NFW1023

⚑ Slave cylinder includes bearing (not Included in Clutch Kit)

* Not Available
Ø Components Available
Š Kit Includes Concentric Slave Cylinder
ƒ Kit Includes Flywheel

© 2014 ZF North American Operations, Inc. All Rights Reserved. No portion of this work may be reproduced or copied by any means without the prior approval of ZF North American Operations, Inc.

SACHS

CLUTCH KIT

Cyl.	CC Cubic Inch	Liter	Year	Application Information	Clutch Kit	Notes Pg.180	Disc Size O.D.	Disc Size I.D.	Disc Size Teeth	PreFilled Master Or System	Master Cylinder	Slave Cylinder	Flywheel
CHEVROLET LIGHT TRUCK (Cont'd)													
C, K, R, V, 10, 20, 30 SERIES, FULL SIZE BLAZER, SILVERADO, SUBURBAN, TRUCK (Cont'd)													
8	350"	5.7	91-88	(to 1/91)	K1909-02	28	12	1 1/8	10T	*	SH5379	SH6028	NFW1023
				Optional Kit/HD Disc	K1909-02HD	28	12	1 1/8	10T	*	SH5379	SH6028	NFW1023
				Optional Kit/CB Disc	K1909-02CB	28	12	1 1/8	10T	*	SH5379	SH6028	NFW1023
				Optional Kit/Kevlar® Disc	K1909-02KL	28	12	1 1/8	10T	*	SH5379	SH6028	NFW1023
			87-86		K1909-02	28	12	1 1/8	10T	*	SH5032	SH6089	NFW1023
				Optional Kit/HD Disc	K1909-02HD	28	12	1 1/8	10T	*	SH5032	SH6089	NFW1023
				Optional Kit/CB Disc	K1909-02CB	28	12	1 1/8	10T	*	SH5032	SH6089	NFW1023
				Optional Kit/Kevlar® Disc	K1909-02KL	28	12	1 1/8	10T	*	SH5032	SH6089	NFW1023
			85-69	12" Clutch	K1862-01	2,28	12	1 1/8	10T	*	*	*	NFW1007
				Optional Kit/Diaph. Cover	K1909-02	28	12	1 1/8	10T	*	*	*	NFW1007
				Optional Kit/Diaph. w/ HD Disc	K1909-02HD	28	12	1 1/8	10T	*	*	*	NFW1007
				Optional Kit/Diaph. w/ CB Disc	K1909-02CB	28	12	1 1/8	10T	*	*	*	NFW1007
				Optional Kit/Diaph. w/ Kevlar® Disc	K1909-02KL	28	12	1 1/8	10T	*	*	*	NFW1007
	364"	6.0	07-03		K70333-01 ⅄		11 1/2	1 1/8	10T	*	SH5192	SH6443WB	NFW1050
				Slave Cylinder w/o Bearing	K70333-01		11 1/2	1 1/8	10T	*	SH5192	SH6443	NFW1050
			02-01		K70333-01 ⅄		11 1/2	1 1/8	10T	*	SH5192	SH6163WB	NFW1050
				Slave Cylinder w/o Bearing	K70333-01		11 1/2	1 1/8	10T	*	SH5192	SH6163	NFW1050
			00-99		K70333-02 ⅄		11 1/2	1 1/8	10T	*	SH5192	SH6133WB	*
				Slave Cylinder w/o Bearing	K70333-02		11 1/2	1 1/8	10T	*	SH5192	SH6133	*
	379"	6.2	93-92		K1909-06 ◘	9,28	11 3/4	1 1/8	10T	SPH044	SH5539	SH6092	NFW1049
				Optional Kit/HD Disc	K1909-06HD ◘	9,28	11 7/8	1 1/8	10T	SPH044	SH5539	SH6092	NFW1049
				Optional Kit/Non-Cam Hub Disc	K1909-02 ◘	28	12	1 1/8	10T	SPH044	SH5539	SH6092	NFW1049
				Optional Kit/Non-Cam Hub HD Disc	K1909-02HD ◘	28	12	1 1/8	10T	SPH044	SH5539	SH6092	NFW1049
				Optional Kit/Non-Cam Hub CB Disc	K1909-02CB ◘	28	12	1 1/8	10T	SPH044	SH5539	SH6092	NFW1049
				Optional Kit/Non-Cam Hub Kevlar® Disc	K1909-02KL ◘	28	12	1 1/8	10T	SPH044	SH5539	SH6092	NFW1049
			91-88	C/K Series	K1909-06 ◘	9,28	11 3/4	1 1/8	10T	*	SH5379	SH6028	NFW1049
				Optional Kit/HD Disc	K1909-06HD ◘	9,28	11 7/8	1 1/8	10T	*	SH5379	SH6028	NFW1049
				Optional Kit/Non-Cam Hub Disc	K1909-02 ◘	28	12	1 1/8	10T	*	SH5379	SH6028	NFW1049
				Optional Kit/Non-Cam Hub HD Disc	K1909-02HD ◘	28	12	1 1/8	10T	*	SH5379	SH6028	NFW1049
				Optional Kit/Non-Cam Hub CB Disc	K1909-02CB ◘	28	12	1 1/8	10T	*	SH5379	SH6028	NFW1049
				Optional Kit/Non-Cam Hub Kevlar® Disc	K1909-02KL ◘	28	12	1 1/8	10T	*	SH5379	SH6028	NFW1049
			91-87	R/V Series incl. Blazer	K1909-06 ◘	9,28	11 3/4	1 1/8	10T	*	SH5032	SH6089	NFW1049
				Optional Kit/HD Disc	K1909-06HD ◘	9,28	11 7/8	1 1/8	10T	*	SH5032	SH6089	NFW1049
				Optional Kit/Non-Cam Hub Disc	K1909-02 ◘	28	12	1 1/8	10T	*	SH5032	SH6089	NFW1049
				Optional Kit/Non-Cam Hub HD Disc	K1909-02HD ◘	28	12	1 1/8	10T	*	SH5032	SH6089	NFW1049
				Optional Kit/Non-Cam Hub CB Disc	K1909-02CB ◘	28	12	1 1/8	10T	*	SH5032	SH6089	NFW1049
				Optional Kit/Non-Cam Hub Kevlar® Disc	K1909-02KL ◘	28	12	1 1/8	10T	*	SH5032	SH6089	NFW1049

⅄ Slave cylinder includes bearing (not Included in Clutch Kit)
◘ Flywheel Casting: # 14050525 uses Flywheel # NFW1049

* Not Available
Ø Components Available
Š Kit Includes Concentric Slave Cylinder
ƒ Kit Includes Flywheel

© 2014 ZF North American Operations, Inc. All Rights Reserved. No portion of this work may be reproduced or copied by any means without the prior approval of ZF North American Operations, Inc.

CLUTCH KIT

Cyl.	CC Cubic Inch	Liter	Year	Application Information	Clutch Kit	Notes Pg.180	Disc Size O.D.	Disc Size I.D.	Disc Size Teeth	PreFilled Master Or System	Master Cylinder	Slave Cylinder	Flywheel
CHEVROLET LIGHT TRUCK (Cont'd)													
C, K, R, V, 10, 20, 30 SERIES, FULL SIZE BLAZER, SILVERADO, SUBURBAN, TRUCK (Cont'd)													
8	379"	6.2	86-85		K1909-02 ◘	28	12	1 1/8	10T	*	SH5032	SH6089	NFW1049
				Optional Kit/HD Disc	K1909-02HD ◘	28	12	1 1/8	10T	*	SH5032	SH6089	NFW1049
				Optional Kit/CB Disc	K1909-02CB ◘	28	12	1 1/8	10T	*	SH5032	SH6089	NFW1049
				Optional Kit/Kevlar® Disc	K1909-02KL ◘	28	12	1 1/8	10T	*	SH5032	SH6089	NFW1049
			84	K5 Blazer	K1909-02 ◘	28	12	1 1/8	10T	*	SH5032	*	NFW1049
				Optional Kit/HD Disc	K1909-02HD ◘	28	12	1 1/8	10T	*	SH5032	*	NFW1049
				Optional Kit/CB Disc	K1909-02CB ◘	28	12	1 1/8	10T	*	SH5032	*	NFW1049
				Optional Kit/Kevlar® Disc	K1909-02KL ◘	28	12	1 1/8	10T	*	SH5032	*	NFW1049
			84-82	C/K Series	K1909-02 ◘	28	12	1 1/8	10T	*	*	*	NFW1049
				Optional Kit/HD Disc	K1909-02HD ◘	28	12	1 1/8	10T	*	*	*	NFW1049
				Optional Kit/CB Disc	K1909-02CB ◘	28	12	1 1/8	10T	*	*	*	NFW1049
				Optional Kit/Kevlar® Disc	K1909-02KL ◘	28	12	1 1/8	10T	*	*	*	NFW1049
	395"	6.5	02-96	Kit for DMF	K70147-01		11 7/8	1 1/8	10T	*	SH5170	SH6133	*
				Kit for Solid Flywheel	K70187-02 ⅄		11 7/8	1 1/8	10T	*	SH5170	SH6133WB	NFW1043
				Slave Cylinder w/o Bearing	K70187-02		11 7/8	1 1/8	10T	*	SH5170	SH6133	NFW1043
				Optional Kit/HD Disc	K70187-02HD ⅄	79	11 7/8	1 1/8	10T	*	SH5170	SH6133WB	NFW1043
				Optional Kit/CB Disc	K70187-02CB	79	11 7/8	1 1/8	10T	*	SH5170	SH6133	NFW1043
			95	Turbo, Kit for DMF	K70054-01	28,32	12	1 1/8	10T	SPH044	SH5179	SH6092	*
				Optional Kit/HD Disc	K70054-01HD	28,32	12	1 1/8	10T	SPH044	SH5179	SH6092	*
				Turbo, Kit for Solid Flywheel	K70188-01	28,32	12	1 1/8	10T	SPH044	SH5179	SH6092	NFW1043
				Optional Kit/HD Disc	K70188-01HD	28,32	12	1 1/8	10T	SPH044	SH5179	SH6092	NFW1043
				Optional Kit/CB Disc	K70188-01CB	28,32	12	1 1/8	10T	SPH044	SH5179	SH6092	NFW1043
				Non-Turbo	*	28,32				SPH044	SH5179	SH6092	*
			94-92	Kit for DMF	K70054-01	28,32	12	1 1/8	10T	SPH044	SH5539	SH6092	*
				Optional Kit/HD Disc	K70054-01HD	28,32	12	1 1/8	10T	SPH044	SH5539	SH6092	*
				Kit for Solid Flywheel	K70188-01	28,32	12	1 1/8	10T	SPH044	SH5539	SH6092	NFW1043
				Optional Kit/HD Disc	K70188-01HD	28,32	12	1 1/8	10T	SPH044	SH5539	SH6092	NFW1043
				Optional Kit/CB Disc	K70188-01CB	28,32	12	1 1/8	10T	SPH044	SH5539	SH6092	NFW1043
	400"	6.6	06-01	Kit for DMF	K70303-01 Š◎	60	12	1 3/8	10T	*	SH5496	SB60149	DMF91128
				Kit w/ Solid Flywheel	K70487-01F Š◎		11 7/8	1 3/8	10T	*	SH5496	SB60149	*
			80-78		K1877-04	28	11	1 1/8	26T	*	*	*	NFW1040
			77-76		K1877-04		11	1 1/8	26T	*	*	*	*
	402"	6.6	72-70	12" Clutch	K1862-01	2	12	1 1/8	10T	*	*	*	NFW1007
				Optional Kit/Diaph. Cover	K1909-02		12	1 1/8	10T	*	*	*	NFW1007
				Optional Kit/Diaph. w/ HD Disc	K1909-02HD		12	1 1/8	10T	*	*	*	NFW1007
				Optional Kit/Diaph. w/ CB Disc	K1909-02CB		12	1 1/8	10T	*	*	*	NFW1007
				Optional Kit/Diaph. w/ Kevlar® Disc	K1909-02KL		12	1 1/8	10T	*	*	*	NFW1007
	454"	7.4	00-97	C/K Series, Wide Lining	K70150-01 ⅄		11 7/8	1 1/8	10T	*	SH5192	SH6133WB	NFW7227
				Slave Cylinder w/o Bearing	K70150-01		11 7/8	1 1/8	10T	*	SH5192	SH6133	NFW7227
			96	C/K Series, Wide Lining	K70150-01 ⅄		11 7/8	1 1/8	10T	*	SH5170	SH6133WB	*
				Slave Cylinder w/o Bearing	K70150-01		11 7/8	1 1/8	10T	*	SH5170	SH6133	*
			95	C/K Series	K1909-06	9,32	11 3/4	1 1/8	10T	SPH044	SH5179	SH6092	NFW1051
				Optional Kit/HD Disc	K1909-06HD	9,32	11 7/8	1 1/8	10T	SPH044	SH5179	SH6092	NFW1051
				Optional Kit/Non-Cam Hub Disc	K1909-02	32	12	1 1/8	10T	SPH044	SH5179	SH6092	NFW1051
				Optional Kit/Non-Cam Hub HD Disc	K1909-02HD	32	12	1 1/8	10T	SPH044	SH5179	SH6092	NFW1051

⅄ Slave cylinder includes bearing (not Included in Clutch Kit)
◎ Kit Only
◘ Flywheel Casting: # 14050525 uses Flywheel # NFW1049

* Not Available
Ø Components Available
Š Kit Includes Concentric Slave Cylinder
ƒ Kit Includes Flywheel

© 2014 ZF North American Operations, Inc. All Rights Reserved. No portion of this work may be reproduced or copied by any means without the prior approval of ZF North American Operations, Inc.

SACHS

CLUTCH KIT

Cyl.	CC Cubic Inch	Liter	Year	Application Information	Clutch Kit	Notes Pg.180	Disc Size O.D.	Disc Size I.D.	Disc Size Teeth	PreFilled Master Or System	Master Cylinder	Slave Cylinder	Flywheel
CHEVROLET LIGHT TRUCK (Cont'd)													
C, K, R, V, 10, 20, 30 SERIES, FULL SIZE BLAZER, SILVERADO, SUBURBAN, TRUCK (Cont'd)													
8	454"	7.4	95	Optional Kit/Non-Cam Hub CB Disc	K1909-02CB	32	12	1 1/8	10T	SPH044	SH5179	SH6092	NFW1051
				Optional Kit/Non-Cam Hub Kevlar® Disc	K1909-02KL	32	12	1 1/8	10T	SPH044	SH5179	SH6092	NFW1051
			94-92	C/K Series	K1909-06	9,32	11 3/4	1 1/8	10T	SPH044	SH5539	SH6092	NFW1051
				Optional Kit/HD Disc	K1909-06HD	9,32	11 7/8	1 1/8	10T	SPH044	SH5539	SH6092	NFW1051
				Optional Kit/Non-Cam Hub Disc	K1909-02	32	12	1 1/8	10T	SPH044	SH5539	SH6092	NFW1051
				Optional Kit/Non-Cam Hub HD Disc	K1909-02HD	32	12	1 1/8	10T	SPH044	SH5539	SH6092	NFW1051
				Optional Kit/Non-Cam Hub CB Disc	K1909-02CB	32	12	1 1/8	10T	SPH044	SH5539	SH6092	NFW1051
				Optional Kit/Non-Cam Hub Kevlar® Disc	K1909-02KL	32	12	1 1/8	10T	SPH044	SH5539	SH6092	NFW1051
			91	C/K Series	K1909-06	9,32	11 3/4	1 1/8	10T	*	SH5379	SH6028	NFW1051
				Optional Kit/HD Disc	K1909-06HD	9,32	11 7/8	1 1/8	10T	*	SH5379	SH6028	NFW1051
				Optional Kit/Non-Cam Hub Disc	K1909-02		12	1 1/8	10T	*	SH5379	SH6028	NFW1051
				Optional Kit/Non-Cam Hub HD Disc	K1909-02HD		12	1 1/8	10T	*	SH5379	SH6028	NFW1051
				Optional Kit/Non-Cam Hub CB Disc	K1909-02CB		12	1 1/8	10T	*	SH5379	SH6028	NFW1051
				Optional Kit/Non-Cam Hub Kevlar® Disc	K1909-02KL		12	1 1/8	10T	*	SH5379	SH6028	NFW1051
			91-87	R/V Series	K1909-02		12	1 1/8	10T	*	SH5032	SH6089	NFW1041
				Optional Kit/HD Disc	K1909-02HD		12	1 1/8	10T	*	SH5032	SH6089	NFW1041
				Optional Kit/CB Disc	K1909-02CB		12	1 1/8	10T	*	SH5032	SH6089	NFW1041
				Optional Kit/Kevlar® Disc	K1909-02KL		12	1 1/8	10T	*	SH5032	SH6089	NFW1041
			90-88	C/K Series	K1909-02	28	12	1 1/8	10T	*	SH5379	SH6028	NFW1041
				Optional Kit/HD Disc	K1909-02HD	28	12	1 1/8	10T	*	SH5379	SH6028	NFW1041
				Optional Kit/CB Disc	K1909-02CB	28	12	1 1/8	10T	*	SH5379	SH6028	NFW1041
				Optional Kit/Kevlar® Disc	K1909-02KL	28	12	1 1/8	10T	*	SH5379	SH6028	NFW1041
			86-85	C/K Series	K1909-02	28	12	1 1/8	10T	*	SH5032	SH6089	NFW1041
				Optional Kit/HD Disc	K1909-02HD	28	12	1 1/8	10T	*	SH5032	SH6089	NFW1041
				Optional Kit/CB Disc	K1909-02CB	28	12	1 1/8	10T	*	SH5032	SH6089	NFW1041
				Optional Kit/Kevlar® Disc	K1909-02KL	28	12	1 1/8	10T	*	SH5032	SH6089	NFW1041
			84-79	12" Clutch	K1862-01	2,28	12	1 1/8	10T	*	SH5032	*	NFW1041
				Optional Kit/Diaph. Cover	K1909-02	28	12	1 1/8	10T	*	SH5032	*	NFW1041
				Optional Kit/Diaph. w/ HD Disc	K1909-02HD	28	12	1 1/8	10T	*	SH5032	*	NFW1041
				Optional Kit/Diaph. w/ CB Disc	K1909-02CB	28	12	1 1/8	10T	*	SH5032	*	NFW1041
				Optional Kit/Diaph. w/ Kevlar® Disc	K1909-02KL	28	12	1 1/8	10T	*	SH5032	*	NFW1041
			78-73	12" Clutch	K1862-01	2,28	12	1 1/8	10T	*	*	*	NFW1041
				Optional Kit/Diaph. Cover	K1909-02	28	12	1 1/8	10T	*	*	*	NFW1041
				Optional Kit/Diaph. w/ HD Disc	K1909-02HD	28	12	1 1/8	10T	*	*	*	NFW1041
				Optional Kit/Diaph. w/ CB Disc	K1909-02CB	28	12	1 1/8	10T	*	*	*	NFW1041
				Optional Kit/Diaph. w/ Kevlar® Disc	K1909-02KL	28	12	1 1/8	10T	*	*	*	NFW1041
	496"	8.1	06-04	Silverado 2500 HD, 3500	K70414-01 Š		11 1/2	1 3/8	10T	*	SH5496	SB60149	*

* Not Available
Ø Components Available
Š Kit Includes Concentric Slave Cylinder
ƒ Kit Includes Flywheel

© 2014 ZF North American Operations, Inc. All Rights Reserved. No portion of this work may be reproduced or copied by any means without the prior approval of ZF North American Operations, Inc.

CLUTCH KIT

Cyl.	CC Cubic Inch	Liter	Year	Application Information	Clutch Kit	Notes Pg.180	Disc Size O.D.	Disc Size I.D.	Disc Size Teeth	PreFilled Master Or System	Master Cylinder	Slave Cylinder	Flywheel
CHEVROLET LIGHT TRUCK (Cont'd)													
C, K, R, V, 10, 20, 30 SERIES, FULL SIZE BLAZER, SILVERADO, SUBURBAN, TRUCK (Cont'd)													
8	496"	8.1	03-01	Silverado 2500 HD, 3500 - 6 Spd.	K70302-01 Š		11 5/8	1 3/8	10T	*	SH5496	SB60149	*
			02-01	C3500 - 5 Spd.	K70372-01 ⅄		11 3/4	1 1/4	10T	*	SH5496	SH6344	*
				Slave Cylinder w/o Bearing	K70372-01		11 3/4	1 1/4	10T	*	SH5496	SH6162	*
COLORADO													
4	169"	2.8	06-04		K70464-01 Š		9 1/8	1 1/8	26T	*	SH5304	SB60193	*
	178"	2.9	11-07		K70464-01 Š		9 1/8	1 1/8	26T	*	SH5304	SB60193	*
5	211"	3.5	06-04		K70394-01 Š		10 3/8	1 1/8	26T	*	SH5304	SB60193	*
				Slave Cylinder w/o Bearing	K70394-01		10 3/8	1 1/8	26T	*	SH5304	SH6133	*
	223"	3.7	07		K70394-01 Š		10 3/8	1 1/8	26T	*	SH5304	SB60193	*
				Slave Cylinder w/o Bearing	K70394-01		10 3/8	1 1/8	26T	*	SH5304	SH6133	*
G, P SERIES													
4	153"	2.5	65-63		K1874-06	28	10	1 1/8	10T	*	*	*	NFW1008
6	194"	3.2	66-64	10" Clutch	K1874-06	28	10	1 1/8	10T	*	*	*	NFW1017
				11" Clutch	K5473-01	28	11	1 1/8	10T	*	*	*	NFW1007
	230"	3.8	69-63	10" Clutch	K1874-06	28	10	1 1/8	10T	*	*	*	NFW1017
				11" Clutch	K5473-01	28	11	1 1/8	10T	*	*	*	NFW1007
	235"	3.8	62-60	P Series, 10" Clutch	K1874-06	28	10	1 1/8	10T	*	*	*	NFW1017
				P Series, 11" Clutch	K5473-01	28	11	1 1/8	10T	*	*	*	NFW1007
				P Series, 12" Clutch	K1862-01	2,28	12	1 1/8	10T	*	*	*	NFW1036
				Optional Kit/Diaph. Cover	K1909-02	28	12	1 1/8	10T	*	*	*	NFW1007
				Optional Kit/Diaph. w/ HD Disc	K1909-02HD	28	12	1 1/8	10T	*	*	*	NFW1007
				Optional Kit/Diaph. w/ CB Disc	K1909-02CB	28	12	1 1/8	10T	*	*	*	NFW1007
				Optional Kit/Diaph. w/ Kevlar® Disc	K1909-02KL	28	12	1 1/8	10T	*	*	*	NFW1007
	250"	4.1	84-77	11" Clutch	K1877-02	28	11	1 1/8	10T	*	*	*	NFW1007
				Optional Power Clutch Kit	PC1877-02	28	11	1 1/8	10T	*	*	*	NFW1007
				12" Clutch	K1862-01	2,28	12	1 1/8	10T	*	*	*	NFW1007
				Optional Kit/Diaph. Cover	K1909-02	28	12	1 1/8	10T	*	*	*	NFW1007
				Optional Kit/Diaph. w/ HD Disc	K1909-02HD	28	12	1 1/8	10T	*	*	*	NFW1007
				Optional Kit/Diaph. w/ CB Disc	K1909-02CB	28	12	1 1/8	10T	*	*	*	NFW1007
				Optional Kit/Diaph. w/ Kevlar® Disc	K1909-02KL	28	12	1 1/8	10T	*	*	*	NFW1007
			76-66	10" Clutch	K1874-06	28	10	1 1/8	10T	*	*	*	NFW1017
				11" Clutch	K5473-01	28	11	1 1/8	10T	*	*	*	NFW1007
	262"	4.3	95	P Series, Cast #10218655	K1877-09	1,9,28	11	1 1/8	10T	SPM014	SH5407	SH6092	NFW1031
				Optional Kit/Non-Cam Hub Disc	K1877-02	1,28	11	1 1/8	10T	SPM014	SH5407	SH6092	NFW1031
				Optional Power Clutch Kit	PC1877-02	1,28	11	1 1/8	10T	SPM014	SH5407	SH6092	NFW1031
				P Series, Cast #14103283	K1877-09	1,9,28	11	1 1/8	10T	SPM014	SH5407	SH6092	NFW1046
				Optional Kit/Non-Cam Hub Disc	K1877-02	1,28	11	1 1/8	10T	SPM014	SH5407	SH6092	NFW1046
				Optional Power Clutch Kit	PC1877-02	1,28	11	1 1/8	10T	SPM014	SH5407	SH6092	NFW1046
			94-92	P Series	K1877-09	1,9,28	11	1 1/8	10T	*	SH5407	SH6092	NFW1046
				Optional Kit/Non-Cam Hub Disc	K1877-02	1,28	11	1 1/8	10T	*	SH5407	SH6092	NFW1046
				Optional Power Clutch Kit	PC1877-02	1,28	11	1 1/8	10T	*	SH5407	SH6092	NFW1046
			91	P Series	K1877-09	9,28	11	1 1/8	10T	*	SH5003	SH6413	NFW1046
				Optional Kit/Non-Cam Hub Disc	K1877-02	28	11	1 1/8	10T	*	SH5003	SH6413	NFW1046
				Optional Power Clutch Kit	PC1877-02	28	11	1 1/8	10T	*	SH5003	SH6413	NFW1046

⅄ Slave cylinder includes bearing (not Included in Clutch Kit)

* Not Available
Ø Components Available
Š Kit Includes Concentric Slave Cylinder
ƒ Kit Includes Flywheel

© 2014 ZF North American Operations, Inc. All Rights Reserved. No portion of this work may be reproduced or copied by any means without the prior approval of ZF North American Operations, Inc.

SACHS

CLUTCH KIT

Cyl.	CC Cubic Inch	Liter	Year	Application Information	Clutch Kit	Notes Pg.180	Disc Size O.D.	Disc Size I.D.	Disc Size Teeth	PreFilled Master Or System	Master Cylinder	Slave Cylinder	Flywheel
CHEVROLET LIGHT TRUCK (Cont'd)													
G, P SERIES (Cont'd)													
6	262"	4.3	90	P Series	K1877-09	9,28	11	1 1/8	10T	*	*	*	NFW1046
				Optional Kit/Non-Cam Hub Disc	K1877-02	28	11	1 1/8	10T	*	*	*	NFW1046
				Optional Power Clutch Kit	PC1877-02	28	11	1 1/8	10T	*	*	*	NFW1046
			90-88	G Series	K1877-09	9,28	11	1 1/8	10T	*	SH5020	SH6028	NFW1023
				Optional Kit/Non-Cam Hub Disc	K1877-02	28	11	1 1/8	10T	*	SH5020	SH6028	NFW1023
				Optional Power Clutch Kit	PC1877-02	28	11	1 1/8	10T	*	SH5020	SH6028	NFW1023
			87-85	G Series	K1877-09	9,28	11	1 1/8	10T	*	*	*	NFW1023
				Optional Kit/Non-Cam Hub Disc	K1877-02	28	11	1 1/8	10T	*	*	*	NFW1023
				Optional Power Clutch Kit	PC1877-02	28	11	1 1/8	10T	*	*	*	NFW1023
	292"	4.8	89-85	P Series	K1877-09	9,28	11	1 1/8	10T	*	*	*	NFW1036
			84-75	11" Clutch	K1877-02	28	11	1 1/8	10T	*	*	*	NFW1036
				Optional Power Clutch Kit	PC1877-02	28	11	1 1/8	10T	*	*	*	NFW1036
				12" Clutch	K1862-01	2,28	12	1 1/8	10T	*	*	*	NFW1036
				Optional Kit/Diaph. Cover	K1909-02	28	12	1 1/8	10T	*	*	*	NFW1007
				Optional Kit/Diaph. w/ HD Disc	K1909-02HD	28	12	1 1/8	10T	*	*	*	NFW1007
				Optional Kit/Diaph. w/ CB Disc	K1909-02CB	28	12	1 1/8	10T	*	*	*	NFW1007
				Optional Kit/Diaph. w/ Kevlar® Disc	K1909-02KL	28	12	1 1/8	10T	*	*	*	NFW1007
			68-64	P Series	K5473-01	28	11	1 1/8	10T	*	*	*	NFW1007
8	283"	4.6	62-61	P Series, 11" Clutch	K5473-01	28	11	1 1/8	10T	*	*	*	NFW1007
				P Series, 12" Clutch	K1862-01	2,28	12	1 1/8	10T	*	*	*	NFW1036
				Optional Kit/Diaph. Cover	K1909-02	28	12	1 1/8	10T	*	*	*	NFW1007
				Optional Kit/Diaph. w/ HD Disc	K1909-02HD	28	12	1 1/8	10T	*	*	*	NFW1007
				Optional Kit/Diaph. w/ CB Disc	K1909-02CB	28	12	1 1/8	10T	*	*	*	NFW1007
				Optional Kit/Diaph. w/ Kevlar® Disc	K1909-02KL	28	12	1 1/8	10T	*	*	*	NFW1007
	305"	5.0	90-88	G Series	K1877-09	9,28	11	1 1/8	10T	*	*	*	NFW1023
				Optional Kit/Non-Cam Hub Disc	K1877-02	28	11	1 1/8	10T	*	*	*	NFW1023
				Optional Power Clutch Kit	PC1877-02	28	11	1 1/8	10T	*	*	*	NFW1023
			87-86	G Series	K1877-09	9,28	11	1 1/8	10T	*	*	*	NFW1023
				Optional Kit/Non-Cam Hub Disc	K1877-02	28	11	1 1/8	10T	*	*	*	NFW1023
				Optional Power Clutch Kit	PC1877-02	28	11	1 1/8	10T	*	*	*	NFW1023
			85-77	11" Clutch	K1877-02	28	11	1 1/8	10T	*	*	*	NFW1007
				Optional Power Clutch Kit	PC1877-02	28	11	1 1/8	10T	*	*	*	NFW1007
				12" Clutch	K1862-01	2,28	12	1 1/8	10T	*	*	*	NFW1007
				Optional Kit/Diaph. Cover	K1909-02	28	12	1 1/8	10T	*	*	*	NFW1007
				Optional Kit/Diaph. w/ HD Disc	K1909-02HD	28	12	1 1/8	10T	*	*	*	NFW1007
				Optional Kit/Diaph. w/ CB Disc	K1909-02CB	28	12	1 1/8	10T	*	*	*	NFW1007
				Optional Kit/Diaph. w/ Kevlar® Disc	K1909-02KL	28	12	1 1/8	10T	*	*	*	NFW1007
	307"	5.0	73-69		K1877-02	28	11	1 1/8	10T	*	*	*	NFW1007
				Optional Power Clutch Kit	PC1877-02	28	11	1 1/8	10T	*	*	*	NFW1007
	322"	5.3	59-56	12" Clutch	K1862-01	2,28	12	1 1/8	10T	*	*	*	*
				Optional Kit/Diaph. Cover	K1909-02	28	12	1 1/8	10T	*	*	*	*
				Optional Kit/Diaph. w/ HD Disc	K1909-02HD	28	12	1 1/8	10T	*	*	*	*
				Optional Kit/Diaph. w/ CB Disc	K1909-02CB	28	12	1 1/8	10T	*	*	*	*
				Optional Kit/Diaph. w/ Kevlar® Disc	K1909-02KL	28	12	1 1/8	10T	*	*	*	*
	327"	5.3	62	12" Clutch	K1862-01	2,28	12	1 1/8	10T	*	*	*	*
				Optional Kit/Diaph. Cover	K1909-02	28	12	1 1/8	10T	*	*	*	*

* Not Available
Ø Components Available
Š Kit Includes Concentric Slave Cylinder
ƒ Kit Includes Flywheel

© 2014 ZF North American Operations, Inc. All Rights Reserved. No portion of this work may be reproduced or copied by any means without the prior approval of ZF North American Operations, Inc.

CLUTCH KIT

Cyl.	CC Cubic Inch	Liter	Year	Application Information	Clutch Kit	Notes Pg.180	Disc Size O.D.	Disc Size I.D.	Disc Size Teeth	PreFilled Master Or System	Master Cylinder	Slave Cylinder	Flywheel
CHEVROLET LIGHT TRUCK (Cont'd)													
G, P SERIES (Cont'd)													
8	327"	5.3	62	Optional Kit/Diaph. w/ HD Disc	K1909-02HD	28	12	1 1/8	10T	*	*	*	*
				Optional Kit/Diaph. w/ CB Disc	K1909-02CB	28	12	1 1/8	10T	*	*	*	*
				Optional Kit/Diaph. w/ Kevlar® Disc	K1909-02KL	28	12	1 1/8	10T	*	*	*	*
	348"	5.7	59-58	12" Clutch	K1862-01	2,28	12	1 1/8	10T	*	*	*	*
				Optional Kit/Diaph. Cover	K1909-02	28	12	1 1/8	10T	*	*	*	*
				Optional Kit/Diaph. w/ HD Disc	K1909-02HD	28	12	1 1/8	10T	*	*	*	*
				Optional Kit/Diaph. w/ CB Disc	K1909-02CB	28	12	1 1/8	10T	*	*	*	*
				Optional Kit/Diaph. w/ Kevlar® Disc	K1909-02KL	28	12	1 1/8	10T	*	*	*	*
	350"	5.7	99-96	P Series	K70149-01	9	11 3/4	1 1/8	10T	*	SH5170	SH6133	NFW1044
				Slave Cylinder w/o Bearing	K70149-01 ⅄	9	11 3/4	1 1/8	10T	*	SH5170	SH6133WB	NFW1044
			95-91	(fr. 2/91) P Series	K1909-06	9	11 3/4	1 1/8	10T	SPH044	SH5539	SH6092	NFW1023
				Optional Kit/HD Disc	K1909-06HD	9	11 7/8	1 1/8	10T	SPH044	SH5539	SH6092	NFW1023
				Optional Kit/Non-Cam Hub Disc	K1909-02		12	1 1/8	10T	SPH044	SH5539	SH6092	NFW1023
				Optional Kit/Non-Cam Hub HD Disc	K1909-02HD		12	1 1/8	10T	SPH044	SH5539	SH6092	NFW1023
				Optional Kit/Non-Cam Hub CB Disc	K1909-02CB		12	1 1/8	10T	SPH044	SH5539	SH6092	NFW1023
				Optional Kit/Non-Cam Hub Kevlar® Disc	K1909-02KL		12	1 1/8	10T	SPH044	SH5539	SH6092	NFW1023
			91-86	(to 1/91) P Series	K1909-02	28	12	1 1/8	10T	*	*	*	NFW1023
				Optional Kit/HD Disc	K1909-02HD	28	12	1 1/8	10T	*	*	*	NFW1023
				Optional Kit/CB Disc	K1909-02CB	28	12	1 1/8	10T	*	*	*	NFW1023
				Optional Kit/Kevlar® Disc	K1909-02KL	28	12	1 1/8	10T	*	*	*	NFW1023
			89-88	G Series	K1909-02	28	12	1 1/8	10T	*	SH5020	SH6028	NFW1023
				Optional Kit/HD Disc	K1909-02HD	28	12	1 1/8	10T	*	SH5020	SH6028	NFW1023
				Optional Kit/CB Disc	K1909-02CB	28	12	1 1/8	10T	*	SH5020	SH6028	NFW1023
				Optional Kit/Kevlar® Disc	K1909-02KL	28	12	1 1/8	10T	*	SH5020	SH6028	NFW1023
			87-86	G Series	K1909-02		12	1 1/8	10T	*	SH5032	SH6089	NFW1023
				Optional Kit/HD Disc	K1909-02HD		12	1 1/8	10T	*	SH5032	SH6089	NFW1023
				Optional Kit/CB Disc	K1909-02CB		12	1 1/8	10T	*	SH5032	SH6089	NFW1023
				Optional Kit/Kevlar® Disc	K1909-02KL		12	1 1/8	10T	*	SH5032	SH6089	NFW1023
			85	G Series	K1909-02		12	1 1/8	10T	*	SH5032	SH6089	NFW1007
				Optional Kit/HD Disc	K1909-02HD		12	1 1/8	10T	*	SH5032	SH6089	NFW1007
				Optional Kit/CB Disc	K1909-02CB		12	1 1/8	10T	*	SH5032	SH6089	NFW1007
				Optional Kit/Kevlar® Disc	K1909-02KL		12	1 1/8	10T	*	SH5032	SH6089	NFW1007
			84-70	12" Clutch	K1862-01	2,28	12	1 1/8	10T	*	*	*	NFW1007
				Optional Kit/Diaph. Cover	K1909-02	28	12	1 1/8	10T	*	*	*	NFW1007
				Optional Kit/Diaph. w/ HD Disc	K1909-02HD	28	12	1 1/8	10T	*	*	*	NFW1007
				Optional Kit/Diaph. w/ CB Disc	K1909-02CB	28	12	1 1/8	10T	*	*	*	NFW1007
				Optional Kit/Diaph. w/ Kevlar® Disc	K1909-02KL	28	12	1 1/8	10T	*	*	*	NFW1007
	379"	6.2	93-92	P Series	K1909-06	9	11 3/4	1 1/8	10T	*	SH5407	SH6092	NFW1049
				Optional Kit/HD Disc	K1909-06HD	9	11 7/8	1 1/8	10T	*	SH5407	SH6092	NFW1049
				Optional Kit/Non-Cam Hub Disc	K1909-02		12	1 1/8	10T	*	SH5407	SH6092	NFW1049
				Optional Kit/Non-Cam Hub HD Disc	K1909-02HD		12	1 1/8	10T	*	SH5407	SH6092	NFW1049
				Optional Kit/Non-Cam Hub CB Disc	K1909-02CB		12	1 1/8	10T	*	SH5407	SH6092	NFW1049

⅄ Slave cylinder includes bearing (not Included in Clutch Kit)

* Not Available
Ø Components Available
Š Kit Includes Concentric Slave Cylinder
ƒ Kit Includes Flywheel

© 2014 ZF North American Operations, Inc. All Rights Reserved. No portion of this work may be reproduced or copied by any means without the prior approval of ZF North American Operations, Inc.

SACHS

CLUTCH KIT

Cyl.	CC Cubic Inch	Liter	Year	Application Information	Clutch Kit	Notes Pg.180	Disc Size O.D.	Disc Size I.D.	Disc Size Teeth	PreFilled Master Or System	Master Cylinder	Slave Cylinder	Flywheel
CHEVROLET LIGHT TRUCK (Cont'd)													
G, P SERIES (Cont'd)													
8	379"	6.2	93-92	Optional Kit/Non-Cam Hub Kevlar® Disc	K1909-02KL		12	1 1/8	10T	*	SH5407	SH6092	NFW1049
			91-90	P Series	K1909-06	9	11 3/4	1 1/8	10T	*	*	SH6413	NFW1049
				Optional Kit/HD Disc	K1909-06HD	9	11 7/8	1 1/8	10T	*	*	SH6413	NFW1049
				Optional Kit/Non-Cam Hub Disc	K1909-02		12	1 1/8	10T	*	*	SH6413	NFW1049
				Optional Kit/Non-Cam Hub HD Disc	K1909-02HD		12	1 1/8	10T	*	*	SH6413	NFW1049
				Optional Kit/Non-Cam Hub CB Disc	K1909-02CB		12	1 1/8	10T	*	*	SH6413	NFW1049
				Optional Kit/Non-Cam Hub Kevlar® Disc	K1909-02KL		12	1 1/8	10T	*	*	SH6413	NFW1049
			89-85	G Series	K1909-02	28	12	1 1/8	10T	*	*	*	NFW1049
				Optional Kit/HD Disc	K1909-02HD	28	12	1 1/8	10T	*	*	*	NFW1049
				Optional Kit/CB Disc	K1909-02CB	28	12	1 1/8	10T	*	*	*	NFW1049
				Optional Kit/Kevlar® Disc	K1909-02KL	28	12	1 1/8	10T	*	*	*	NFW1049
				P Series	K1909-02	28	12	1 1/8	10T	*	SH5032	SH6089	NFW1049
				Optional Kit/HD Disc	K1909-02HD	28	12	1 1/8	10T	*	SH5032	SH6089	NFW1049
				Optional Kit/CB Disc	K1909-02CB	28	12	1 1/8	10T	*	SH5032	SH6089	NFW1049
				Optional Kit/Kevlar® Disc	K1909-02KL	28	12	1 1/8	10T	*	SH5032	SH6089	NFW1049
	395"	6.5	99-96	P Series, Kit for DMF	K70147-01		11 7/8	1 1/8	10T	*	SH5170	SH6133	*
				Slave Cylinder w/o Bearing	K70147-01 ⚲		11 7/8	1 1/8	10T	*	SH5170	SH6133WB	*
				P Series, Kit for Solid Flywheel	K70187-02		11 7/8	1 1/8	10T	*	SH5170	SH6133	NFW1043
				Slave Cylinder w/o Bearing	K70187-02 ⚲		11 7/8	1 1/8	10T	*	SH5170	SH6133WB	NFW1043
				Optional Kit/HD Disc	K70187-02HD	79	11 7/8	1 1/8	10T	*	SH5170	SH6133	NFW1043
				Optional Kit/CB Disc	K70187-02CB	79	11 7/8	1 1/8	10T	*	SH5170	SH6133	NFW1043
			95-94	P Series	K1909-06	9,28	11 3/4	1 1/8	10T	SPH044	SH5407	SH6092	NFW1049
				Optional Kit/HD Disc	K1909-06HD	9,28	11 7/8	1 1/8	10T	SPH044	SH5407	SH6092	NFW1049
				Optional Kit/Non-Cam Hub Disc	K1909-02	28	12	1 1/8	10T	SPH044	SH5407	SH6092	NFW1049
				Optional Kit/Non-Cam Hub HD Disc	K1909-02HD	28	12	1 1/8	10T	SPH044	SH5407	SH6092	NFW1049
				Optional Kit/Non-Cam Hub CB Disc	K1909-02CB	28	12	1 1/8	10T	SPH044	SH5407	SH6092	NFW1049
				Optional Kit/Non-Cam Hub Kevlar® Disc	K1909-02KL	28	12	1 1/8	10T	SPH044	SH5407	SH6092	NFW1049
	400"	6.6	80-76		K1877-04	28	11	1 1/8	26T	*	*	*	NFW1040
	454"	7.4	95-91	(fr. 2/91) P Series	K1909-02	1,28	12	1 1/8	10T	SPH044	*	*	NFW1051
				Optional Kit/HD Disc	K1909-02HD	1,28	12	1 1/8	10T	SPH044	*	*	NFW1051
				Optional Kit/CB Disc	K1909-02CB	1,28	12	1 1/8	10T	SPH044	*	*	NFW1051
				Optional Kit/Kevlar® Disc	K1909-02KL	1,28	12	1 1/8	10T	SPH044	*	*	NFW1051
			91-88	(to 1/91)	K1909-02	28	12	1 1/8	10T	*	SH5020	SH6028	NFW1041
				Optional Kit/HD Disc	K1909-02HD	28	12	1 1/8	10T	*	SH5020	SH6028	NFW1041
				Optional Kit/CB Disc	K1909-02CB	28	12	1 1/8	10T	*	SH5020	SH6028	NFW1041
				Optional Kit/Kevlar® Disc	K1909-02KL	28	12	1 1/8	10T	*	SH5020	SH6028	NFW1041
			87-85	P Series	K1909-02	28	12	1 1/8	10T	*	SH5032	SH6089	NFW1041
				Optional Kit/HD Disc	K1909-02HD	28	12	1 1/8	10T	*	SH5032	SH6089	NFW1041
				Optional Kit/CB Disc	K1909-02CB	28	12	1 1/8	10T	*	SH5032	SH6089	NFW1041

⚲ Slave cylinder includes bearing (not Included in Clutch Kit)

* Not Available
Ø Components Available
Š Kit Includes Concentric Slave Cylinder
ƒ Kit Includes Flywheel

© 2014 ZF North American Operations, Inc. All Rights Reserved. No portion of this work may be reproduced or copied by any means without the prior approval of ZF North American Operations, Inc.

CLUTCH KIT

Cyl.	CC Cubic Inch	Liter	Year	Application Information	Clutch Kit	Notes Pg.180	Disc Size O.D.	Disc Size I.D.	Disc Size Teeth	PreFilled Master Or System	Master Cylinder	Slave Cylinder	Flywheel
CHEVROLET LIGHT TRUCK (Cont'd)													
G, P SERIES (Cont'd)													
8	454"	7.4	87-85	Optional Kit/Kevlar® Disc	K1909-02KL	28	12	1 1/8	10T	*	SH5032	SH6089	NFW1041
			84-73		K1862-01	2,28	12	1 1/8	10T	*	*	*	NFW1041
				Optional Kit/Diaph. Cover	K1909-02	28	12	1 1/8	10T	*	*	*	NFW1041
				Optional Kit/Diaph. w/ HD Disc	K1909-02HD	28	12	1 1/8	10T	*	*	*	NFW1041
				Optional Kit/Diaph. w/ CB Disc	K1909-02CB	28	12	1 1/8	10T	*	*	*	NFW1041
				Optional Kit/Diaph. w/ Kevlar® Disc	K1909-02KL	28	12	1 1/8	10T	*	*	*	NFW1041
			71-70		K1862-01	2,28	12	1 1/8	10T	*	*	*	NFW1041
				Optional Kit/Diaph. Cover	K1909-02	28	12	1 1/8	10T	*	*	*	NFW1041
				Optional Kit/Diaph. w/ HD Disc	K1909-02HD	28	12	1 1/8	10T	*	*	*	NFW1041
				Optional Kit/Diaph. w/ CB Disc	K1909-02CB	28	12	1 1/8	10T	*	*	*	NFW1041
				Optional Kit/Diaph. w/ Kevlar® Disc	K1909-02KL	28	12	1 1/8	10T	*	*	*	NFW1041
HHR													
4	122"	2.0	10-09	SS Panel, SS - Turbo	SK70405-1		9 7/16	1	14T	*	SH5546	*	*
			08	SS Turbo	SK70405-1		9 7/16	1	14T	*	SH5546	*	*
	134"	2.2	11-09		K70412-01 Š◎		8 7/8	1	14T	*	SH5546	SB60211	NFW9123
			08	2nd Design w/ Blue Mounting Gasket	K70412-01 Š◎		8 7/8	1	14T	*	SH5546	SB60211	NFW9123
			08-06	1st Design w/ Black Mounting Gasket	K70412-01 Š◎		8 7/8	1	14T	*	SH5491	SB60211	NFW9123
	145"	2.4	11-09		K70412-01 Š◎		8 7/8	1	14T	*	SH5546	SB60211	NFW9123
			08	2nd Design w/ Blue Mounting Gasket	K70412-01 Š◎		8 7/8	1	14T	*	SH5546	SB60211	NFW9123
			08-06	1st Design w/ Black Mounting Gasket	K70412-01 Š◎		8 7/8	1	14T	*	SH5491	SB60211	NFW9123
LUV													
4	111"	1.8	82-80	4WD, G180 eng., 10-12 Series	KF637-01		8 1/2	1	24T	*	*	*	*
			82-72	2WD, G180 eng., 2-12 Series	KF583-03		7 7/8	1	24T	*	SH5376	*	*
			79	4WD, G180 eng., 9 Series	KF583-03		7 7/8	1	24T	*	*	*	*
			77-76	2WD	KF583-03		7 7/8	1	24T	*	SH5376	SH6367	*
			75-72	2WD	KF583-03		7 7/8	1	24T	*	SH5376	*	*
			72	G161 eng., 1 Series	KF579-01 ◎		8	1	10T	*	*	*	*
	134"	2.2	82-81	C223 eng., 11-12 Series	KF637-01		8 1/2	1	24T	*	*	*	*
S10, T10, BLAZER, PICK-UP													
4	116"	1.9	85-84		*					*	SH5003	SH6042	*
	122"	2.0	84		K1904-01	32	9 1/8	1	14T	*	SH5003	SH6004	NFW1008
			83		K1904-01		9 1/8	1	14T	*	*	*	NFW1008
	134"	2.2	03-02		K1904-10 ⚲		9 1/8	1 1/8	26T	*	SH5181	SH6344	NFW1006
				Slave Cylinder w/o Bearing	K1904-10		9 1/8	1 1/8	26T	*	SH5181	SH6162	NFW1006
			01-98		K1904-09 ⚲		9 1/8	1 1/8	26T	*	SH5181	SH6133WB	NFW1006
				Slave Cylinder w/o Bearing	K1904-09		9 1/8	1 1/8	26T	*	SH5181	SH6133	NFW1006
			97-96		K1904-09 ⚲		9 1/8	1 1/8	26T	*	SH5171	SH6133WB	NFW1006
				Slave Cylinder w/o Bearing	K1904-09		9 1/8	1 1/8	26T	*	SH5171	SH6133	NFW1006
			95-94		K1904-08	32	9 1/8	1 1/8	26T	SPH008	SH5048	SH6043	NFW1006
			85-84		*					*	SH5003	SH6042	*

⚲ Slave cylinder includes bearing (not Included in Clutch Kit)
◎ Kit Only

* Not Available
Ø Components Available
Š Kit Includes Concentric Slave Cylinder
ƒ Kit Includes Flywheel

© 2014 ZF North American Operations, Inc. All Rights Reserved. No portion of this work may be reproduced or copied by any means without the prior approval of ZF North American Operations, Inc.

SACHS

CLUTCH KIT

Cyl.	CC Cubic Inch	Liter	Year	Application Information	Clutch Kit	Notes Pg.180	Disc Size O.D.	Disc Size I.D.	Disc Size Teeth	PreFilled Master Or System	Master Cylinder	Slave Cylinder	Flywheel
CHEVROLET LIGHT TRUCK (Cont'd)													
S10, T10, BLAZER, PICK-UP (Cont'd)													
4	151"	2.5	93-92		K1904-01	32	9 1/8	1	14T	SPH001	SH5049	SH6043	NFW1008
			91-85		K1904-01	32	9 1/8	1	14T	*	SH5003	SH6004	NFW1008
6	173"	2.8	93-92		K1904-03	9,32	9 1/8	1	14T	SPH014	SH5049	SH6043	NFW1009
				Optional Kit/Non-Cam Hub Disc	K1904-01	32	9 1/8	1	14T	SPH014	SH5049	SH6043	NFW1009
			91-90		K1904-03	9,32	9 1/8	1	14T	*	SH5003	SH6004	NFW1009
				Optional Kit/Non-Cam Hub Disc	K1904-01	32	9 1/8	1	14T	*	SH5003	SH6004	NFW1009
			89-88		K1904-01	32	9 1/8	1	14T	*	SH5003	SH6004	NFW1009
			87-85		K1904-01	32	9 1/8	1	14T	*	SH5003	SH6004	*
	262"	4.3	04-98	ZN4 eng.	K70169-01 ⅄	9	11	1 1/8	10T	*	SH5181	SH6133WB	NFW1046
				Slave Cylinder w/o Bearing	K70169-01	9	11	1 1/8	10T	*	SH5181	SH6133	NFW1046
				Optional Kit/Non-Predamp Disc	K70169-02		11	1 1/8	10T	*	SH5181	SH6133	NFW1046
			98	exc. ZN4 eng.	K70169-01 ⅄	9	11	1 1/8	10T	*	SH5181	SH6133WB	NFW1021
				Slave Cylinder w/o Bearing	K70169-01	9	11	1 1/8	10T	*	SH5181	SH6133	NFW1021
				Optional Kit/Non-Predamp Disc	K70169-02		11	1 1/8	10T	*	SH5181	SH6133	NFW1021
			97-96	8th Digit of VIN # W	K70169-01 ⅄	9	11	1 1/8	10T	*	SH5181	SH6133WB	NFW1046
				Slave Cylinder w/o Bearing	K70169-01	9	11	1 1/8	10T	*	SH5181	SH6133	NFW1046
				Optional Kit/Non-Predamp Disc	K70169-02		11	1 1/8	10T	*	SH5181	SH6133	NFW1046
				8th Digit of VIN # X	K70169-01 ⅄	9	11	1 1/8	10T	*	SH5181	SH6133	NFW1046
				Slave Cylinder w/o Bearing	K70169-01	9	11	1 1/8	10T	*	SH5181	SH6133WB	NFW1046
				Optional Kit/Non-Predamp Disc	K70169-02		11	1 1/8	10T	*	SH5181	SH6133	NFW1046
			95-94	Cast # 10218653	K70375-01	1,9,32	11	1 1/8	10T	*	SH5048	SH6044	NFW1031
				Optional Kit/HD Disc	K70375-01HD	1,32	11	1 1/8	10T	*	SH5048	SH6044	NFW1031
				Cast # 14103282	K70375-01	1,9,32	11	1 1/8	10T	*	SH5048	SH6044	NFW1046
				Optional Kit/HD Disc	K70375-01HD	1,32	11	1 1/8	10T	*	SH5048	SH6044	NFW1046
			93		K70375-01	1,9,32	11	1 1/8	10T	*	SH5049	SH6044	NFW1031
				Optional Kit/HD Disc	K70375-01HD	1,32	11	1 1/8	10T	*	SH5049	SH6044	NFW1031
			92-90		K1877-09	1,9,32	11	1 1/8	10T	*	SH5049	SH6044	NFW1046
				Optional Kit/Non-Cam Hub Disc	K1877-02	1,32	11	1 1/8	10T	*	SH5049	SH6044	NFW1046
				Optional Power Clutch Kit	PC1877-02	1,32	11	1 1/8	10T	*	SH5049	SH6044	NFW1046
			89-88		K1877-09	1,9,32	11	1 1/8	10T	*	SH5003	SH6030	NFW1021
				Optional Kit/Non-Cam Hub Disc	K1877-02	32	11	1 1/8	10T	*	SH5003	SH6030	NFW1021
				Optional Power Clutch Kit	PC1877-02	32	11	1 1/8	10T	*	SH5003	SH6030	NFW1021
TAHOE													
8	350"	5.7	95		K1909-06	9	11 3/4	1 1/8	10T	SPH044	SH5179	SH6092	NFW1023
				Optional Kit/HD Disc	K1909-06HD	9	11 7/8	1 1/8	10T	SPH044	SH5179	SH6092	NFW1023
				Optional Kit/Non-Cam Hub Disc	K1909-02		12	1 1/8	10T	SPH044	SH5179	SH6092	NFW1023
				Optional Kit/Non-Cam Hub HD Disc	K1909-02HD		12	1 1/8	10T	SPH044	SH5179	SH6092	NFW1023
				Optional Kit/Non-Cam Hub CB Disc	K1909-02CB		12	1 1/8	10T	SPH044	SH5179	SH6092	NFW1023
				Optional Kit/Non-Cam Hub Kevlar® Disc	K1909-02KL		12	1 1/8	10T	SPH044	SH5179	SH6092	NFW1023
TRACKER													
4	98"	1.6	00-99		K0107-04		8 1/2	7/8	20T	*	SH5206	SH6220	NFW6801

⅄ Slave cylinder includes bearing (not Included in Clutch Kit)

* Not Available
Ø Components Available
Š Kit Includes Concentric Slave Cylinder
ƒ Kit Includes Flywheel

© 2014 ZF North American Operations, Inc. All Rights Reserved. No portion of this work may be reproduced or copied by any means without the prior approval of ZF North American Operations, Inc.

CLUTCH KIT

Cyl.	CC Cubic Inch	Liter	Year	Application Information	Clutch Kit	Notes Pg.180	Disc Size O.D.	Disc Size I.D.	Disc Size Teeth	PreFilled Master Or System	Master Cylinder	Slave Cylinder	Flywheel
CHEVROLET LIGHT TRUCK (Cont'd)													
TRACKER (Cont'd)													
4	98"	1.6	98		K0107-03		8 1/2	7/8	20T	*	SH5206	SH6220	NFW6801
	122"	2.0	03		K70240-01		8 7/8	7/8	20T	*	SH5256	SH6220	*
			02-99		K70240-01		8 7/8	7/8	20T	*	SH5206	SH6220	*
CHEVROLET MEDIUM TRUCK													
C50-70, C4500-7500, KODIAK, T6500-7500													
6	292"	4.8	89-80	Spicer Style Kit w/ CB Disc	K70200-01	28	13	1 1/2	10T	*	*	*	*
			89-63	12" Clutch	K1862-01	2,28	12	1 1/8	10T	*	*	*	*
				Optional Kit/Diaph. Cover	K1909-02	28	12	1 1/8	10T	*	*	*	*
				Optional Kit/Diaph. w/ HD Disc	K1909-02HD	28	12	1 1/8	10T	*	*	*	*
				Optional Kit/Diaph. w/ CB Disc	K1909-02CB	28	12	1 1/8	10T	*	*	*	*
				Optional Kit/Diaph. w/ Kevlar® Disc	K1909-02KL	28	12	1 1/8	10T	*	*	*	*
				Diaph. Cover	K1919-20		12 7/8	1 1/2	10T	*	*	*	*
				Optional Kit/Diaph. w/ CB Disc	K1919-01		13	1 1/2	10T	*	*	*	*
				Optional Kit/Diaph. w/ Kevlar® Disc	K1919-05KL		12 7/8	1 1/2	10T	*	*	*	*
	441"	7.2	03-99	C6500 Kodiak, C7500 Kodiak, Eaton trans., Pull Type	K70323-01 ◎		14	1 3/4	10T	*	*	*	*
			02-97	T6500, T7500, Eaton trans., Pull Type	K70324-01 ◎		14	1 3/4	10T	*	*	*	*
8	350"	5.7	90		K1882-02	2,28	12 7/8	1 1/2	10T	*	*	*	*
				Optional Kit/CB Disc	K1882-01	2,28	13	1 1/2	10T	*	*	*	*
				Optional Kit/Diaph. w/ CB Disc	K1919-01	28	13	1 1/2	10T	*	*	*	*
			89-80	Spicer Style Kit w/ CB Disc	K70200-01	28	13	1 1/2	10T	*	*	*	*
			89-63	12" Clutch	K1862-01	2,28	12	1 1/8	10T	*	*	*	*
				Optional Kit/Diaph. Cover	K1909-02	28	12	1 1/8	10T	*	*	*	*
				Optional Kit/Diaph. w/ HD Disc	K1909-02HD	28	12	1 1/8	10T	*	*	*	*
				Optional Kit/Diaph. w/ CB Disc	K1909-02CB	28	12	1 1/8	10T	*	*	*	*
				Optional Kit/Diaph. w/ Kevlar® Disc	K1909-02KL	28	12	1 1/8	10T	*	*	*	*
				Diaph. Cover	K1919-20	28	12 7/8	1 1/2	10T	*	*	*	*
				Optional Kit/Diaph. w/ CB Disc	K1919-01	28	13	1 1/2	10T	*	*	*	*
				Optional Kit/Diaph. w/ Kevlar® Disc	K1919-05KL	28	12 7/8	1 1/2	10T	*	*	*	*
	366"	6.0	98-90		K1882-03	2,28	12 7/8	1 1/2	10T	*	*	*	NFW1093
				Optional Kit/CB Disc	K1882-03CB	2,28	12 7/8	1 1/2	10T	*	*	*	NFW1093
				Optional Kit/Diaph. Cover	K1919-05		12 7/8	1 1/2	10T	*	*	*	NFW1093
				Optional Kit/Diaph. w/ CB Disc	K1919-04		13	1 1/2	10T	*	*	*	NFW1093
			95-90	Spicer Style Kit w/ CB Disc	K70200-01		13	1 1/2	10T	*	*	*	*
			89-85	exc. MWX trans.	K1882-02	2,28	12 7/8	1 1/2	10T	*	*	*	*
				Optional Kit/CB Disc	K1882-01	2,28	13	1 1/2	10T	*	*	*	*
				MWX Trans.	K1882-02	2,28	12 7/8	1 1/2	10T	*	*	*	NFW1091
				Optional Kit/CB Disc	K1882-01	2,28	13	1 1/2	10T	*	*	*	NFW1091
			84-63	Diaph. Cover	K1919-20		12 7/8	1 1/2	10T	*	*	*	*
				Optional Kit/Diaph. w/ CB Disc	K1919-01		13	1 1/2	10T	*	*	*	*
				Optional Kit/Diaph. w/ Kevlar® Disc	K1919-05KL		12 7/8	1 1/2	10T	*	*	*	*
	403"	6.6	07-03	121mm Bearing Length	K0514-01 ◎		13	1 1/2	10T	*	*	*	*
			05-03	72mm Bearing Length	K0513-01 ◎		13	1 1/2	10T	*	*	*	*

◎ Kit Only

* Not Available
Ø Components Available
Š Kit Includes Concentric Slave Cylinder
ƒ Kit Includes Flywheel

© 2014 ZF North American Operations, Inc. All Rights Reserved. No portion of this work may be reproduced or copied by any means without the prior approval of ZF North American Operations, Inc.

SACHS

CLUTCH KIT

Cyl.	CC Cubic Inch	Liter	Year	Application Information	Clutch Kit	Notes Pg.180	Disc Size O.D.	Disc Size I.D.	Disc Size Teeth	PreFilled Master Or System	Master Cylinder	Slave Cylinder	Flywheel
CHEVROLET MEDIUM TRUCK (Cont'd)													
C50-70, C4500-7500, KODIAK, T6500-7500 (Cont'd)													
8	427"	7.0	98-94		K70293-01 ♌		13	1 1/2	10T	*	*	*	*
			93-90		K1882-04	2,28	13	1 1/2	10T	*	*	*	*
				Optional Kit/Diaph. Cover	K1919-05		12 7/8	1 1/2	10T	*	*	*	*
				Optional Kit/Diaph. w/ CB Disc	K1919-04		13	1 1/2	10T	*	*	*	*
			89-85		K1882-02	2,28	12 7/8	1 1/2	10T	*	*	*	*
				Optional Kit/CB Disc	K1882-01	2,28	13	1 1/2	10T	*	*	*	*
			84-65	Diaph. Cover	K1919-20		12 7/8	1 1/2	10T	*	*	*	*
				Optional Kit/Diaph. w/ CB Disc	K1919-01		13	1 1/2	10T	*	*	*	*
				Optional Kit/Diaph. w/ Kevlar® Disc	K1919-05KL		12 7/8	1 1/2	10T	*	*	*	*
	454"	7.4	01-99		K70293-01 ♌		13	1 1/2	10T	*	*	*	*
	496"	8.1	07-03	121mm Bearing Length	K0514-01 ◎		13	1 1/2	10T	*	*	*	*
			05-03	72mm Bearing Length	K0513-01 ◎		13	1 1/2	10T	*	*	*	*
				Pull Type	K70323-01 ◎		14	1 3/4	10T	*	*	*	*
TILTMASTER (W3500-5500)													
4	236"	3.9	99-95	(fr. 7-95) W4500	K70320-03	28	12	1 1/8	21T	*	*	*	*
			97-95	W3500	K70320-02	28	11 3/4	1 1/8	21T	*	SH5039	SH6388	*
			95-90	(fr. 6/90 to 6/95) W4500	K70320-02	28	11 3/4	1 1/8	21T	*	*	*	*
			90-85	(to 5/90) W4500	K32232-01		10 3/4	1	24T	*	*	*	*
				Optional Kit/CB Disc	K32232-02		10 3/4	1	24T	*	*	*	*
	290"	4.8	01-99	w/ brake booster	K70321-01	28	12 3/4	1 1/2	10T	*	*	*	*
				w/o brake booster	K70322-01	28	12	1 1/8	21T	*	*	*	*
CHRYSLER													
CIRRUS													
4	122"	2.0	00		K70131-01 ƒ◎	10	9	15/16	17T	*	*	*	*
				Optional Power Clutch Kit	PC70131-01 ƒ◎	10	9	15/16	17T	*	*	*	*
CONQUEST													
4	156"	2.6	89-88		KF678-05		9 7/16	1 1/16	23T	*	SH5051	SH6045	NFW5102
			87	Turbo w/ intercooler	KF685-01		8 7/8	1	23T	*	SH5051	SH6045	*
					KF685-03		8 7/8	1	23T	*	SH5051	SH6045	*
CROSSFIRE													
6	195"	3.2	08-04		*					*	SH5349	SB60299	*
LASER													
4	135"	2.2	86-84		K0050-03		8 1/2	13/16	18T	*	*	*	*
				Turbo I	K0066-07		9	13/16	18T	*	*	*	*
	151"	2.5	86		K0066-07		9	13/16	18T	*	*	*	*
LeBARON													
4	135"	2.2	90-84	Turbo	K0066-07		9	13/16	18T	*	*	*	*
			89-82	Non-Turbo	K0050-03		8 1/2	13/16	18T	*	*	*	*
	153"	2.5	93-91		K0066-03		9 1/8	15/16	17T	*	*	*	*
			90-86		K0066-07		9	13/16	18T	*	*	*	*
6	181"	3.0	93-91		K0066-03		9 1/8	15/16	17T	*	*	*	*
			90		K0066-07		9	13/16	18T	*	*	*	*

♌ 1994-97 O.E. 13" Valeo clutch kit can replace the 14" spicer style kit only for standard Kodiak and/or Topkick models where there is a dual-drilled flywheel. Optional engine/transmission designs are excluded.
◎ Kit Only

* Not Available
Ø Components Available
Š Kit Includes Concentric Slave Cylinder
ƒ Kit Includes Flywheel

© 2014 ZF North American Operations, Inc. All Rights Reserved. No portion of this work may be reproduced or copied by any means without the prior approval of ZF North American Operations, Inc.

CLUTCH KIT

Cyl.	CC Cubic Inch	Liter	Year	Application Information	Clutch Kit	Notes Pg.180	Disc Size O.D.	Disc Size I.D.	Disc Size Teeth	PreFilled Master Or System	Master Cylinder	Slave Cylinder	Flywheel
CHRYSLER (Cont'd)													
NEWPORT													
8	360"	5.9	71		K1675-03		10 1/2	1	23T	*	*	*	*
	361"	5.9	64-61	Lever Cover	K1506L-02	2	10 1/2	1	23T	*	*	*	*
				Diaph. Cover	K1675-03		10 1/2	1	23T	*	*	*	*
	383"	6.3	69-68	11" Clutch	K1877-06		11	1	23T	*	*	*	*
				Optional Kit/HD Disc	K1877-06HD		11	1	23T	*	*	*	*
				10 1/2" Clutch	K1675-03		10 1/2	1	23T	*	*	*	*
			67-65	Lever Cover	K1506L-02	2	10 1/2	1	23T	*	*	*	*
				Diaph. Cover	K1675-03		10 1/2	1	23T	*	*	*	*
	413"	6.7	61-59	Lever Cover	K1506L-02	2	10 1/2	1	23T	*	*	*	*
				Diaph. Cover	K1675-03		10 1/2	1	23T	*	*	*	*
NEW YORKER													
8	413"	6.7	61-59		K1506L-02	2	10 1/2	1	23T	*	*	*	*
				Optional Kit/Diaph. Cover	K1675-03		10 1/2	1	23T	*	*	*	*
PT CRUISER													
4	148"	2.4	09-08	Non-Turbo	K70486-01 ƒ◎	10	10 3/4	7/8	17T	*	*	*	*
			07	Non-Turbo	K70486-01 ƒ◎	10	10 3/4	7/8	17T	*	SH5191	*	*
			07-06	Turbo	K70340-01 Š	60	9 7/16	1 1/8	26T	*	SH5191	SB60051	DMF91160
			06-01	Non-Turbo	K70486-01 ƒ◎	10	10 3/4	7/8	17T	*	SH5191	SH6158	*
			05-03	Turbo	K70340-01 Š	60	9 7/16	1 1/8	26T	*	SH5217	SB60051	DMF91160
SARATOGA													
8	383"	6.3	60-59		K1506L-02	2	10 1/2	1	23T	*	*	*	*
				Optional Kit/Diaph. Cover	K1675-03		10 1/2	1	23T	*	*	*	*
SEBRING													
4	122"	2.0	99-95		K70131-01 ƒ◎	10	9	15/16	17T	*	SH5116	SH6111	*
				Optional Power Clutch Kit	PC70131-01 ƒ◎	10	9	15/16	17T	*	SH5116	SH6111	*
	148"	2.4	05-01		KF735-01		8 7/8	7/8	20T	*	SH5210	SH6175	*
6	167"	2.7	04-01		*					*	SH5216	SH6179	*
	181"	3.0	05-01	Pull Type	K70314-01 ◎		9	1	23T	*	SH5211	SH6176	*
WINDSOR													
8	383"	6.3	61-59		K1506L-02	2	10 1/2	1	23T	*	*	*	*
				Optional Kit/Diaph. Cover	K1675-03		10 1/2	1	23T	*	*	*	*
300													
8	383"	6.3	66-62		K1506L-02	2	10 1/2	1	23T	*	*	*	*
				Optional Kit/Diaph. Cover	K1675-03		10 1/2	1	23T	*	*	*	*
	413"	6.8	61-59		K1506L-02	2	10 1/2	1	23T	*	*	*	*
				Optional Kit/Diaph. Cover	K1675-03		10 1/2	1	23T	*	*	*	*
DAEWOO													
LANOS													
4	1588cc	1.6	02-99		K70265-01		8 1/2	13/16	24T	*	SH5212	SH6177	NFW9150
LEGANZA													
4	2200cc	2.2	02-99		K70267-01		8 7/8	3/4	24T	*	SH5212	SH6177	*
NUBIRA													
4	1998cc	2.0	02-99		K70267-01		8 7/8	3/4	24T	*	SH5212	SH6177	*

◎ Kit Only

* Not Available
Ø Components Available
Š Kit Includes Concentric Slave Cylinder
ƒ Kit Includes Flywheel

© 2014 ZF North American Operations, Inc. All Rights Reserved. No portion of this work may be reproduced or copied by any means without the prior approval of ZF North American Operations, Inc.

SACHS

CLUTCH KIT

Cyl.	CC Cubic Inch	Liter	Year	Application Information	Clutch Kit	Notes Pg.180	Disc Size O.D.	Disc Size I.D.	Disc Size Teeth	PreFilled Master Or System	Master Cylinder	Slave Cylinder	Flywheel
DAIHATSU													
CHARADE													
3	993cc	1.0	92-88		KF750-01		6 3/4	7/8	20T	*	*	*	*
4	1295cc	1.3	92-89		KF765-01		7 1/2	7/8	20T	*	*	*	*
ROCKY													
4	1589cc	1.6	92-90		KF766-01		7 7/8	7/8	20T	*	*	*	*
DODGE													
ARIES													
4	135"	2.2	89-81		K0050-03		8 1/2	13/16	18T	*	*	*	*
	153"	2.5	89-86		K0066-07		9	13/16	18T	*	*	*	*
ASPEN													
6	225"	3.7	78-76	10" Clutch	K1525-01	2	10	1	23T	*	*	*	*
8	318"	5.2	78-76		K1675-03		10 1/2	1	23T	*	*	*	*
AVENGER													
4	122"	2.0	99-95		K70131-01 ƒ◎	10	9	15/16	17T	*	SH5116	SH6111	*
				Optional Power Clutch Kit	PC70131-01 ƒ◎	10	9	15/16	17T	*	SH5116	SH6111	*
CALIBER													
4	110"	1.8	09-07		K70813-01 ƒ Š◎	10	9	7/8	17T	*	*	SB60300	*
	122"	2.0	12-10		K70812-01 ƒ Š◎		8 7/8	13/16	17T	*	*	SB60300	*
	144"	2.4	11-09	Non-Turbo	K70813-01 ƒ Š◎	10	9	7/8	17T	*	*	SB60300	*
			08-07	Non-Turbo	K70813-01 ƒ Š◎	10	9	7/8	17T	*	SH5544	SB60300	*
CHALLENGER													
4	97"	1.6	79-78		KF621-05		7 7/8	7/8	20T	*	*	*	*
	156"	2.6	83-78		KF685-03		8 7/8	1	23T	*	*	*	NFW5102
6	225"	3.7	72-70	10" Clutch	K1525-01	2	10	1	23T	*	*	*	*
8	318"	5.2	74-70		K1506L-02	2	10 1/2	1	23T	*	*	*	*
				Optional Kit/Diaph. Cover	K1675-03		10 1/2	1	23T	*	*	*	*
	340"	5.6	73-70		K1506L-02	2	10 1/2	1	23T	*	*	*	*
				Optional Kit/Diaph. Cover	K1675-03		10 1/2	1	23T	*	*	*	*
	345"	5.7	14-12	R/T	K70620-01 ◎		9 7/16	1 27/64	26T	*	*	SB60314	*
			11	R/T	K70620-02 ◎		9 7/16	15/16	10T	*	*	SB60314	*
			10-09	R/T	K70620-01 ◎		9 7/16	1 27/64	26T	*	*	SB60314	*
	360"	5.9	74		K1858-05	2	11	1	23T	*	*	*	*
	370"	6.1	10-09	SRT8	K70620-01 ◎		9 7/16	1 27/64	26T	*	*	SB60314	*
	383"	6.3	71-70		K1858-05	2	11	1	23T	*	*	*	*
	392"	6.4	14-12	SRT8	K70620-01 ◎		9 7/16	1 27/64	26T	*	*	SB60314	*
			11	SRT8	K70620-02 ◎		9 7/16	15/16	10T	*	*	SB60314	*
CHARGER (FWD)													
4	135"	2.2	87-86	Turbo	K0066-07		9	13/16	18T	*	*	*	*
			87-83	Non-Turbo	K0050-03		8 1/2	13/16	18T	*	*	*	*
CHARGER (RWD)													
6	225"	3.7	76	10" Clutch	K1525-01	2	10	1	23T	*	*	*	*
			74-68	10" Clutch	K1525-01	2	10	1	23T	*	*	*	*
8	273"	4.5	66	10" Clutch	K1525-01	2	10	1	23T	*	*	*	*
				10 1/2" Clutch	K1506L-02	2	10 1/2	1	23T	*	*	*	*
	318"	5.2	78-66		K1506L-02	2	10 1/2	1	23T	*	*	*	*
				Optional Kit/Diaph. Cover	K1675-03		10 1/2	1	23T	*	*	*	*

◎ Kit Only

* Not Available
Ø Components Available
Š Kit Includes Concentric Slave Cylinder
ƒ Kit Includes Flywheel

© 2014 ZF North American Operations, Inc. All Rights Reserved. No portion of this work may be reproduced or copied by any means without the prior approval of ZF North American Operations, Inc.

CLUTCH KIT

Cyl.	CC Cubic Inch	Liter	Year	Application Information	Clutch Kit	Notes Pg.180	Disc Size O.D.	Disc Size I.D.	Disc Size Teeth	PreFilled Master Or System	Master Cylinder	Slave Cylinder	Flywheel
DODGE (Cont'd)													
CHARGER (RWD) (Cont'd)													
8	340"	5.6	73-71		K1506L-02	2	10 1/2	1	23T	*	*	*	*
				Optional Kit/Diaph. Cover	K1675-03		10 1/2	1	23T	*	*	*	*
	360"	5.9	77-74		K1858-05	2	11	1	23T	*	*	*	*
	383"	6.3	71-70		K1858-05	2	11	1	23T	*	*	*	*
			69-66	10 1/2" Clutch	K1675-03		10 1/2	1	23T	*	*	*	*
				11" Clutch	K1877-06		11	1	23T	*	*	*	*
				Optional Kit/HD Disc	K1877-06HD		11	1	23T	*	*	*	*
	400"	6.6	74-72		K1858-05	2	11	1	23T	*	*	*	*
COLT													
4	86"	1.4	84-81	4 Spd.	KF621-03		7 7/8	7/8	20T	*	*	*	*
			84-80	8 Spd.	KF600-02		7 1/4	7/8	20T	*	*	*	*
			79	4 Spd.	KF621-03		7 7/8	7/8	20T	*	*	*	*
	90"	1.5	94-91		KF621-03		7 7/8	7/8	20T	*	*	*	*
			90-89		KF621-03		7 7/8	7/8	20T	*	*	SH6048	*
			88-85	4 Spd.	KF621-03		7 7/8	7/8	20T	*	*	SH6048	*
				5 Spd.	KF600-02		7 1/4	7/8	20T	*	*	SH6048	*
	98"	1.6	90-89		K0107-01		8 1/2	7/8	20T	*	*	SH6048	*
			88-84	5 Spd. & 8 Spd.	KF621-03		7 7/8	7/8	20T	*	*	*	*
			83-79	7 1/4" Clutch	KF600-02		7 1/4	7/8	20T	*	*	*	*
			81-71	7 7/8" Clutch	KF621-05		7 7/8	7/8	20T	*	*	*	*
	107"	1.8	90-89		K0107-01		8 1/2	7/8	20T	*	*	*	*
	112"	1.8	94-92		K0107-01		8 1/2	7/8	20T	*	*	SH6046	*
	122"	2.0	77-74		KF591-03		8 1/2	7/8	20T	*	*	*	*
	156"	2.6	80-78		KF685-03		8 7/8	1	23T	*	*	*	*
COLT VISTA													
4	122"	2.0	91-87	2WD (fr. 11/86)	K0107-01		8 1/2	7/8	20T	*	SH5051	SH6048	*
			91-85	4WD	K0107-01		8 1/2	7/8	20T	*	SH5051	SH6049	*
			86-84	2WD (to 10/86)	KF621-03		7 7/8	7/8	20T	*	SH5051	*	*
	143"	2.4	94-93		KF735-01		8 7/8	7/8	20T	*	*	SH6046	*
CONQUEST													
4	156"	2.6	86-84	Turbo w/o Intercooler (to 5/87)	KF685-03		8 7/8	1	23T	*	SH5051	SH6045	NFW5102
CORONET													
6	225"	3.7	76-65	10" Clutch	K1525-01	2	10	1	23T	*	*	*	*
8	273"	4.5	68-65	10" Clutch	K1525-01	2	10	1	23T	*	*	*	*
				10 1/2" Clutch	K1506L-02	2	10 1/2	1	23T	*	*	*	*
	318"	5.2	76-65	Diaph. Cover	K1675-03		10 1/2	1	23T	*	*	*	*
			73	Lever Cover	K1506L-02	2	10 1/2	1	23T	*	*	*	*
	340"	5.6	72		K1506L-02	2	10 1/2	1	23T	*	*	*	*
				Optional Kit/Diaph. Cover	K1675-03		10 1/2	1	23T	*	*	*	*
	360"	5.9	74		K1858-05	2	11	1	23T	*	*	*	*
	383"	6.3	71-70		K1858-05	2	11	1	23T	*	*	*	*
			69	11" Clutch	K1877-06		11	1	23T	*	*	*	*
				Optional Kit/HD Disc	K1877-06HD		11	1	23T	*	*	*	*
			69-65	10 1/2" Clutch	K1675-03		10 1/2	1	23T	*	*	*	*
	400"	6.6	74-72		K1858-05	2	11	1	23T	*	*	*	*

* Not Available
Ø Components Available
Š Kit Includes Concentric Slave Cylinder
ƒ Kit Includes Flywheel

© 2014 ZF North American Operations, Inc. All Rights Reserved. No portion of this work may be reproduced or copied by any means without the prior approval of ZF North American Operations, Inc.

SACHS

CLUTCH KIT

Cyl.	CC Cubic Inch	Liter	Year	Application Information	Clutch Kit	Notes Pg.180	Disc Size O.D.	Disc Size I.D.	Disc Size Teeth	PreFilled Master Or System	Master Cylinder	Slave Cylinder	Flywheel
DODGE (Cont'd)													
DART													
6	170"	2.8	63-61	10" Clutch	K1525-01	2	10	1	23T	*	*	*	*
	225"	3.7	76-60	10" Clutch	K1525-01	2	10	1	23T	*	*	*	*
8	273"	4.5	69-65	10" Clutch	K1525-01	2	10	1	23T	*	*	*	*
			68-65	10 1/2" Clutch	K1506L-02	2	10 1/2	1	23T	*	*	*	*
	318"	5.2	76-67	Diaph. Cover	K1675-03		10 1/2	1	23T	*	*	*	*
			73	Lever Cover	K1506L-02	2	10 1/2	1	23T	*	*	*	*
			63-61		K1675-03		10 1/2	1	23T	*	*	*	*
	340"	5.6	72-68		K1506L-02	2	10 1/2	1	23T	*	*	*	*
				Optional Kit/Diaph. Cover	K1675-03		10 1/2	1	23T	*	*	*	*
	360"	5.9	74		K1858-05	2	11	1	23T	*	*	*	*
	383"	6.3	69	11" Clutch	K1877-06		11	1	23T	*	*	*	*
				Optional Kit/HD Disc	K1877-06HD		11	1	23T	*	*	*	*
			69-63	10 1/2" Clutch	K1675-03		10 1/2	1	23T	*	*	*	*
DAYTONA													
4	135"	2.2	93-92		K70067-01		9 1/8	15/16	17T	*	*	*	*
			90-84	Turbo	K0066-07		9	13/16	18T	*	*	*	*
			86-84	Non-Turbo	K0050-03		8 1/2	13/16	18T	*	*	*	*
	153"	2.5	93-91	Non-Turbo	K0066-03		9 1/8	15/16	17T	*	*	*	*
			92-91	Turbo	K70067-01		9 1/8	15/16	17T	*	*	*	*
			90-86	incl. Turbo	K0066-07		9	13/16	18T	*	*	*	*
6	181"	3.0	93-91		K0066-03		9 1/8	15/16	17T	*	*	*	*
			90		K0066-07		9	13/16	18T	*	*	*	*
DIPLOMAT													
6	225"	3.7	78	10" Clutch	K1525-01	2	10	1	23T	*	*	*	*
8	318"	5.2	78-77		K1675-03		10 1/2	1	23T	*	*	*	*
LANCER													
4	135"	2.2	89-85	Turbo	K0066-07		9	13/16	18T	*	*	*	*
				Non-Turbo	K0050-03		8 1/2	13/16	18T	*	*	*	*
	153"	2.5	89-86	incl. Turbo	K0066-07		9	13/16	18T	*	*	*	*
6	170"	2.8	62-61	10" Clutch	K1525-01	2	10	1	23T	*	*	*	*
	225"	3.7	62-61	10" Clutch	K1525-01	2	10	1	23T	*	*	*	*
MONACO													
8	318"	5.2	78-75		K1675-03		10 1/2	1	23T	*	*	*	*
			70-68		K1675-03		10 1/2	1	23T	*	*	*	*
	360"	5.9	74		K1858-05	2	11	1	23T	*	*	*	*
			71		K1675-03		10 1/2	1	23T	*	*	*	*
	383"	6.3	71-70		K1858-05	2	11	1	23T	*	*	*	*
			69	11" Clutch	K1877-06		11	1	23T	*	*	*	*
				Optional Kit/HD Disc	K1877-06HD		11	1	23T	*	*	*	*
			69-65	10 1/2" Clutch	K1675-03		10 1/2	1	23T	*	*	*	*
	400"	6.6	74-72		K1858-05	2	11	1	23T	*	*	*	*
NEON													
4	122"	2.0	05-01	USA (11th Digit of VIN # D), Replaces O.E. 8 1/2" Modular Clutch	K70131-01 ƒ◎	10	9	15/16	17T	*	SH5194	SH6180	*
				Optional Power Clutch Kit	PC70131-01 ƒ◎	10	9	15/16	17T	*	SH5194	SH6180	*

◎ Kit Only

* Not Available
Ø Components Available
Š Kit Includes Concentric Slave Cylinder
ƒ Kit Includes Flywheel

© 2014 ZF North American Operations, Inc. All Rights Reserved. No portion of this work may be reproduced or copied by any means without the prior approval of ZF North American Operations, Inc.

CLUTCH KIT

Cyl.	CC Cubic Inch	Liter	Year	Application Information	Clutch Kit	Notes Pg.180	Disc Size O.D.	Disc Size I.D.	Disc Size Teeth	PreFilled Master Or System	Master Cylinder	Slave Cylinder	Flywheel
DODGE (Cont'd)													
NEON (Cont'd)													
4	122"	2.0	01	Mexico (11th Digit of VIN # T)	K70132-01		8 1/2	15/16	17T	*	SH5194	SH6180	*
			00-96	Mexico (11th Digit of VIN # T)	K70132-01		8 1/2	15/16	17T	*	*	*	*
				USA (11th Digit of VIN # D), Replaces O.E. 8 1/2" Modular Clutch	K70131-01 ƒ◎	10	9	15/16	17T	*	*	*	*
				Optional Power Clutch Kit	PC70131-01 ƒ◎	10	9	15/16	17T	*	*	*	*
			95		K70132-01		8 1/2	15/16	17T	*	*	*	*
	148"	2.4	05-03		K70344-01 ƒ◎	10	9 1/2	15/16	17T	*	SH5215	*	*
OMNI													
4	105"	1.7	83-78	A412 trans.	K1885-01 ◎		7 1/2	13/16	24T	*	*	*	*
	135"	2.2	90-81	Non-Turbo	K0050-03		8 1/2	13/16	18T	*	*	*	*
			86	Turbo	K0066-07		9	13/16	18T	*	*	*	*
POLARA													
6	170"	2.8	63	10" Clutch	K1525-01	2	10	1	23T	*	*	*	*
	225"	3.7	71-70	10" Clutch	K1525-01	2	10	1	23T	*	*	*	*
			64-63	10" Clutch	K1525-01	2	10	1	23T	*	*	*	*
8	273"	4.5	67-65	10" Clutch	K1525-01	2	10	1	23T	*	*	*	*
				10 1/2" Clutch	K1506L-02	2	10 1/2	1	23T	*	*	*	*
	318"	5.2	73	Lever Cover	K1506L-02	2	10 1/2	1	23T	*	*	*	*
			73-61	Diaph. Cover	K1675-03		10 1/2	1	23T	*	*	*	*
	360"	5.9	71		K1675-03		10 1/2	1	23T	*	*	*	*
	383"	6.3	71-70		K1858-05	2	11	1	23T	*	*	*	*
			69	11" Clutch	K1877-06		11	1	23T	*	*	*	*
				Optional Kit/HD Disc	K1877-06HD		11	1	23T	*	*	*	*
			69-63	10 1/2" Clutch	K1675-03		10 1/2	1	23T	*	*	*	*
	400"	6.6	73-72		K1858-05	2	11	1	23T	*	*	*	*
SHADOW													
4	135"	2.2	94-91	Non-Turbo	K0050-02		8 1/2	15/16	17T	*	*	*	*
			90-87	Non-Turbo	K0050-03		8 1/2	13/16	18T	*	*	*	*
				Turbo	K0066-07		9	13/16	18T	*	*	*	*
	153"	2.5	94-91	Non-Turbo	K0066-03		9 1/8	15/16	17T	*	*	*	*
			92-91	Turbo	K70067-01		9 1/8	15/16	17T	*	*	*	*
			90-88	incl. Turbo	K0066-07		9	13/16	18T	*	*	*	*
6	181"	3.0	94-92		K0066-03		9 1/8	15/16	17T	*	*	*	*
SPIRIT													
4	135"	2.2	92-91		K70067-01		9 1/8	15/16	17T	*	*	*	*
	153"	2.5	93-91	Non-Turbo	K0066-03		9 1/8	15/16	17T	*	*	*	*
			92	Turbo	K70067-01		9 1/8	15/16	17T	*	*	*	*
			89	incl. Turbo	K0066-07		9	13/16	18T	*	*	*	*
6	181"	3.0	93-91		K0066-03		9 1/8	15/16	17T	*	*	*	*
STEALTH													
6	181"	3.0	96-91	2WD, Non-Turbo	KF735-01		8 7/8	7/8	20T	*	SH5522	SH6112	NFW5134
				4WD, Turbo	K70048-01 ◎		9 7/8	1 1/16	23T	*	SH5080	SH6112	*

◎ Kit Only

* Not Available
Ø Components Available
Š Kit Includes Concentric Slave Cylinder
ƒ Kit Includes Flywheel

© 2014 ZF North American Operations, Inc. All Rights Reserved. No portion of this work may be reproduced or copied by any means without the prior approval of ZF North American Operations, Inc.

SACHS

CLUTCH KIT

Cyl.	CC Cubic Inch	Liter	Year	Application Information	Clutch Kit	Notes Pg.180	Disc Size O.D.	Disc Size I.D.	Disc Size Teeth	PreFilled Master Or System	Master Cylinder	Slave Cylinder	Flywheel
DODGE (Cont'd)													
STRATUS													
4	122"	2.0	00-95		K70131-01 ƒ◎	10	9	15/16	17T	*	*	*	*
				Optional Power Clutch Kit	PC70131-01 ƒ◎	10	9	15/16	17T	*	*	*	*
	148"	2.4	05-01	8th Digit of VIN # G	KF735-01		8 7/8	7/8	20T	*	SH5210	SH6175	*
6	167"	2.7	04-01		*					*	SH5216	SH6179	*
	181"	3.0	05-01		K70314-01 ◎		9	1	23T	*	SH5211	SH6176	*
VIPER													
10	490"	8.0	02-92		K70192-01 ⅄		12 1/4	1 1/8	26T	*	SH5173	SH6151WB	*
				Slave Cylinder w/o Bearing	K70192-01		12 1/4	1 1/8	26T	*	SH5173	SH6151	*
	505"	8.3	06-03		K70192-01 ⅄		12 1/4	1 1/8	26T	*	SH5173	SH6151WB	*
				Slave Cylinder w/o Bearing	K70192-01		12 1/4	1 1/8	26T	*	SH5173	SH6151	*
	515"	8.4	10-08		*					*	SH5173	*	*
2000 GTX (CANADA ONLY)													
4	122"	2.0	90-89	DOHC	K0107-01		8 1/2	7/8	20T	*	*	*	*
400													
4	135"	2.2	83-82		K0050-03		8 1/2	13/16	18T	*	*	*	*
600													
4	135"	2.2	88-84	Turbo	K0066-07		9	13/16	18T	*	*	*	*
			88-83	Non-Turbo	K0050-03		8 1/2	13/16	18T	*	*	*	*
	153"	2.5	88-86		K0066-07		9	13/16	18T	*	*	*	*
DODGE LIGHT TRUCK													
B VAN SERIES													
6	198"	3.2	71	10" Clutch	K1525-01	2	10	1	23T	*	*	*	*
	225"	3.7	87-76	10" Clutch w/ A833 trans.	K1525-01	2	10	1	23T	*	*	*	*
			83-71	11" Clutch w/ Lever Cover	K1858-05	2	11	1	23T	*	*	*	*
				11" Clutch w/ Diaph. Cover	K1877-06		11	1	23T	*	*	*	*
				Optional Kit/HD Disc	K1877-06HD		11	1	23T	*	*	*	*
	239"	3.9	93-92		K1890-05		10 1/2	1 1/8	10T	*	SH5141	SH6127	*
				Optional Kit/CB Disc	K1890-05CB		10 1/2	1 1/8	10T	*	SH5141	SH6127	*
			91-88	5 Spd. w/ A535 trans., Original F&S Style	K0120-01	1	10 3/8	1	23T	*	SH5142	SH6128	NFW1204
8	318"	5.2	93-92	USA Built	K70082-01		11	1	19T	*	SH5142	SH6127	*
				Mexico Built	K70082-01		11	1	19T	*	SH5145	SH6127	*
			91-88		K5473-03		11	1	23T	*	SH5142	SH6128	*
			87-86	10 1/2" Clutch	K1506L-02	2	10 1/2	1	23T	*	SH5146	SH6130	NFW1204
				Optional Kit/Diaph. Cover	K1675-03		10 1/2	1	23T	*	SH5146	SH6130	NFW1204
				11" Clutch	K1877-06		11	1	23T	*	SH5146	SH6130	*
				Optional Kit/HD Disc	K1877-06HD		11	1	23T	*	SH5146	SH6130	*
			85-77	10 1/2" Clutch	K1506L-02	2	10 1/2	1	23T	*	*	*	NFW1204
				Optional Kit/Diaph. Cover	K1675-03		10 1/2	1	23T	*	*	*	NFW1204
			85-71	11" Clutch	K1858-05	2	11	1	23T	*	*	*	*
				Optional Kit/Diaph. Cover	K1877-06		11	1	23T	*	*	*	*
				Optional Kit/Diaph. w/ HD Disc	K1877-06HD		11	1	23T	*	*	*	*
	360"	5.9	80-71		K1858-05	2	11	1	23T	*	*	*	*
				Optional Kit/Diaph. Cover	K1877-06		11	1	23T	*	*	*	*
				Optional Kit/Diaph. w/ HD Disc	K1877-06HD		11	1	23T	*	*	*	*

⅄ Slave cylinder includes bearing (not Included in Clutch Kit)
◎ Kit Only

* Not Available
Ø Components Available
Š Kit Includes Concentric Slave Cylinder
ƒ Kit Includes Flywheel

© 2014 ZF North American Operations, Inc. All Rights Reserved. No portion of this work may be reproduced or copied by any means without the prior approval of ZF North American Operations, Inc.

CLUTCH KIT

Cyl.	CC Cubic Inch	Liter	Year	Application Information	Clutch Kit	Notes Pg.180	Disc Size O.D.	Disc Size I.D.	Disc Size Teeth	PreFilled Master Or System	Master Cylinder	Slave Cylinder	Flywheel
DODGE LIGHT TRUCK (Cont'd)													
B VAN SERIES (Cont'd)													
8	400"	6.6	78-76		K1862-04	2	12	1	23T	*	*	*	*
				Optional Kit/Diaph. Cover	K1909-10		12	1	23T	*	*	*	*
			74-72		K1862-04	2	12	1	23T	*	*	*	*
				Optional Kit/Diaph. Cover	K1909-10		12	1	23T	*	*	*	*
	440"	7.2	78-74		K1862-04	2	12	1	23T	*	*	*	*
				Optional Kit/Diaph. Cover	K1909-10		12	1	23T	*	*	*	*
D, W TRUCK SERIES													
6	198"	3.2	71-70	10" Clutch	K1525-01	2	10	1	23T	*	*	*	*
	225"	3.7	87-86	10" Clutch w/ A833 trans.	K1525-01	2	10	1	23T	*	*	*	*
			83-69	11" Clutch w/ Lever Cover	K1858-05	2	11	1	23T	*	*	*	*
				11" Clutch w/ Diaph. Cover	K1877-06		11	1	23T	*	*	*	*
				Optional Kit/HD Disc	K1877-06HD		11	1	23T	*	*	*	*
	239"	3.9	93-92	USA Built	K70082-01		11	1	19T	*	SH5142	SH6127	*
				Mexico Built	K70082-01		11	1	19T	*	SH5145	SH6127	*
			91-88	4 Spd., 435 trans.	K5473-03		11	1	23T	*	SH5142	SH6128	NFW1204
	359"	5.9	93-92	Turbo Diesel	K70687-01		13	1 1/4	10T	*	SH5145	SH6131	NFW7221
				Optional Kit/HD Disc	K70687-01HD		13	1 1/4	10T	*	SH5145	SH6131	NFW7221
				Optional Kit/CB Disc	K70687-01CB		13	1 1/4	10T	*	SH5145	SH6131	NFW7221
			91-89	Turbo Diesel	K70687-01		13	1 1/4	10T	*	SH5144	SH6130	NFW7221
				Optional Kit/HD Disc	K70687-01HD		13	1 1/4	10T	*	SH5144	SH6130	NFW7221
				Optional Kit/CB Disc	K70687-01CB		13	1 1/4	10T	*	SH5144	SH6130	NFW7221
8	318"	5.2	93-92	USA Built	K70082-01		11	1	19T	*	SH5142	SH6127	*
				Mexico Built	K70082-01		11	1	19T	*	SH5145	SH6127	*
			91-88		K5473-03		11	1	23T	*	SH5142	SH6128	*
			87-86	10 1/2" Clutch	K1506L-02	2	10 1/2	1	23T	*	SH5146	SH6130	NFW1204
				Optional Kit/Diaph. Cover	K1675-03		10 1/2	1	23T	*	SH5146	SH6130	NFW1204
				11" Clutch	K1877-06		11	1	23T	*	SH5146	SH6130	*
				Optional Kit/HD Disc	K1877-06HD		11	1	23T	*	SH5146	SH6130	*
			85-77	10 1/2" Clutch	K1506L-02	2	10 1/2	1	23T	*	*	*	NFW1204
				Optional Kit/Diaph. Cover	K1675-03		10 1/2	1	23T	*	*	*	NFW1204
			85-66	11" Clutch	K1858-05	2	11	1	23T	*	*	*	*
				Optional Kit/Diaph. Cover	K1877-06		11	1	23T	*	*	*	*
				Optional Kit/Diaph. w/ HD Disc	K1877-06HD		11	1	23T	*	*	*	*
			70-66	10" Clutch	K1525-01	2	10	1	23T	*	*	*	*
	360"	5.9	93-92	USA Built	K70082-01		11	1	19T	*	SH5142	SH6127	*
				Mexico Built	K70082-01		11	1	19T	*	SH5145	SH6127	*
			91-88		K5473-03		11	1	23T	*	SH5142	SH6128	*
			87-86		K1858-05	2	11	1	23T	*	SH5146	SH6130	*
				Optional Kit/Diaph. Cover	K1877-06		11	1	23T	*	SH5146	SH6130	*
				Optional Kit/Diaph. w/ HD Disc	K1877-06HD		11	1	23T	*	SH5146	SH6130	*
			85-71		K1858-05	2	11	1	23T	*	*	*	*
				Optional Kit/Diaph. Cover	K1877-06		11	1	23T	*	*	*	*
				Optional Kit/Diaph. w/ HD Disc	K1877-06HD		11	1	23T	*	*	*	*
	383"	6.3	71-69		K1862-04	2	12	1	23T	*	*	*	*
				Optional Kit/Diaph. Cover	K1909-10		12	1	23T	*	*	*	*

* Not Available
Ø Components Available
Š Kit Includes Concentric Slave Cylinder
ƒ Kit Includes Flywheel

© 2014 ZF North American Operations, Inc. All Rights Reserved. No portion of this work may be reproduced or copied by any means without the prior approval of ZF North American Operations, Inc.

SACHS

CLUTCH KIT

Cyl.	CC Cubic Inch	Liter	Year	Application Information	Clutch Kit	Notes Pg.180	Disc Size O.D.	Disc Size I.D.	Disc Size Teeth	PreFilled Master Or System	Master Cylinder	Slave Cylinder	Flywheel
DODGE LIGHT TRUCK (Cont'd)													
D, W TRUCK SERIES (Cont'd)													
8	400"	6.6	78-72		K1862-04	2	12	1	23T	*	*	*	*
				Optional Kit/Diaph. Cover	K1909-10		12	1	23T	*	*	*	*
	440"	7.2	78-73		K1862-04	2	12	1	23T	*	*	*	*
				Optional Kit/Diaph. Cover	K1909-10		12	1	23T	*	*	*	*
CARAVAN													
4	135"	2.2	87-84		K0066-07		9	13/16	18T	*	*	*	*
	153"	2.5	92		K0066-03		9 1/8	15/16	17T	*	*	*	*
			90-88		K0066-07		9	13/16	18T	*	*	*	*
	156"	2.6	87-84		KF685-03		8 7/8	1	23T	*	*	*	*
6	181"	3.0	92		K0066-03		9 1/8	15/16	17T	*	*	*	*
			90		K0066-07		9	13/16	18T	*	*	*	*
D50													
4	122"	2.0	82-81		KF591-04		8 1/2	1	23T	*	*	*	NFW5105
			80-79		KF591-01		8 1/2	7/8	20T	*	*	*	NFW5105
	156"	2.6	82-79		KF685-03		8 7/8	1	23T	*	*	*	*
DAKOTA													
4	135"	2.2	88-87		K0061-03		9 1/8	1	23T	*	SH5155	SH6128	*
	153"	2.5	02-99		K70081-04		9 1/8	1	19T	*	SH5140	SH6134	*
			98-97		K70081-03		9 1/8	1	14T	*	SH5140	SH6134	*
			96		K70081-03		9 1/8	1	14T	*	SH5154	SH6127	*
			95-93		K70081-02		9 1/8	1 1/8	10T	*	SH5155	SH6127	*
			92		K70081-01		9 1/8	1	19T	*	SH5155	SH6127	*
			91-89		K0061-03		9 1/8	1	23T	*	SH5155	SH6128	*
6	226"	3.7	09-04	O.E. 11" Clutch	K70134-02	9	11	1 1/8	10T	SPH026	SH5140	SH6328	*
				12" Clutch	K70144-02	67	12	1 1/8	10T	SPH026	SH5140	SH6328	*
	239"	3.9	03-01	O.E. 11" Clutch	K70134-02	9	11	1 1/8	10T	*	SH5140	SH6134	*
				12" Clutch	K70144-02	67	12	1 1/8	10T	*	SH5140	SH6134	*
			00		K70268-01		10 1/2	1 1/8	10T	*	SH5140	SH6134	*
			99-97		K1890-05		10 1/2	1 1/8	10T	*	SH5140	SH6134	*
				Optional Kit/CB Disc	K1890-05CB		10 1/2	1 1/8	10T	*	SH5140	SH6134	*
			96-95		K1890-05		10 1/2	1 1/8	10T	SPH003	SH5154	SH6455	*
				Optional Kit/CB Disc	K1890-05CB		10 1/2	1 1/8	10T	SPH003	SH5154	SH6455	*
			94-92		K1890-05		10 1/2	1 1/8	10T	SPH004	SH5155	SH6455	*
				Optional Kit/CB Disc	K1890-05CB		10 1/2	1 1/8	10T	SPH004	SH5155	SH6455	*
			91-87		K0120-01	1	10 3/8	1	23T	*	SH5155	SH6128	NFW1204
8	285"	4.7	07-04	O.E. 11" Clutch	K70134-02	9	11	1 1/8	10T	SPH026	SH5140	SH6328	*
				12" Clutch	K70144-02	67	12	1 1/8	10T	SPH026	SH5140	SH6328	*
			03-02	O.E. 11" Clutch	K70134-02	9	11	1 1/8	10T	*	SH5140	SH6327	*
				12" Clutch	K70144-02	67	12	1 1/8	10T	*	SH5140	SH6327	*
	287"	4.7	01-00	O.E. 11" Clutch	K70134-02	9	11	1 1/8	10T	*	SH5140	SH6134	*
				12" Clutch	K70144-02	67	12	1 1/8	10T	*	SH5140	SH6134	*
	318"	5.2	99-97		K70134-02	9	11	1 1/8	10T	*	SH5140	SH6134	NFW7225
			96-95		K70134-02	9	11	1 1/8	10T	SPH003	SH5154	SH6127	NFW7225
			94		K70134-02	9	11	1 1/8	10T	*	SH5155	SH6127	NFW7225

* Not Available
Ø Components Available
Š Kit Includes Concentric Slave Cylinder
ƒ Kit Includes Flywheel

© 2014 ZF North American Operations, Inc. All Rights Reserved. No portion of this work may be reproduced or copied by any means without the prior approval of ZF North American Operations, Inc.

CLUTCH KIT

Cyl.	CC Cubic Inch	Liter	Year	Application Information	Clutch Kit	Notes Pg.180	Disc Size O.D.	Disc Size I.D.	Disc Size Teeth	PreFilled Master Or System	Master Cylinder	Slave Cylinder	Flywheel
DODGE LIGHT TRUCK (Cont'd)													
MINI RAM													
4	135"	2.2	87-84		K0066-07		9	13/16	18T	*	*	*	*
	153"	2.5	88-87		K0066-07		9	13/16	18T	*	*	*	*
	156"	2.6	87-84		KF685-03		8 7/8	1	23T	*	*	*	*
NITRO													
6	226"	3.7	08-07		K70498-01	14	10 3/8	1 1/8	10T	*	*	SH6520	*
POWER RAM 50, RAM 50													
4	122"	2.0	84-83		KF591-04		8 1/2	1	23T	*	*	*	NFW5105
	143"	2.3	84-83		KF685-03		8 7/8	1	23T	*	SH5052	SH6045	*
	156"	2.6	84-83		KF685-03		8 7/8	1	23T	*	*	*	*
RAIDER													
4	156"	2.6	89-87		KF685-01		8 7/8	1	23T	*	SH5052	SH6045	NFW5102
6	181"	3.0	89		KF703-01		9 7/16	1 3/16	14T	*	SH5052	SH6074	*
RAM 1500													
6	226"	3.7	08-06	O.E. 11" Clutch	K70134-02	9	11	1 1/8	10T	SPH061	SH5479	SH6330	*
				12" Clutch	K70144-02	67	12	1 1/8	10T	SPH061	SH5479	SH6330	*
			05-03	(fr. 7/03) O.E. 11" Clutch	K70134-02	9	11	1 1/8	10T	SPH061	SH5479	SH6330	NFW9127
				(fr. 7/03) 12" Clutch	K70144-02	67	12	1 1/8	10T	SPH061	SH5479	SH6330	*
			03-02	(to 6/03) O.E. 11" Clutch	K70134-02	9	11	1 1/8	10T	*	SH5479	SH6329	NFW9127
				(to 6/03) 12" Clutch	K70144-02	67	12	1 1/8	10T	*	SH5479	SH6329	*
	239"	3.9	01-00	O.E. 11" Clutch	K70134-02	9	11	1 1/8	10T	SPH025	SH5183	SH6327	*
				12" Clutch	K70144-02	67	12	1 1/8	10T	SPH025	SH5183	SH6327	*
			99-94	O.E. 11" Clutch	K70134-02	9	11	1 1/8	10T	SPH029	SH5183	SH6327	*
				12" Clutch	K70144-02	67	12	1 1/8	10T	SPH029	SH5183	SH6327	*
8	285"	4.7	08		*	67				SPH061	SH5479	SH6330	*
			07-05	O.E. 11" Clutch	K70134-02	9	11	1 1/8	10T	SPH061	SH5479	SH6330	NFW9127
				12" Clutch	K70144-02	67	12	1 1/8	10T	SPH061	SH5479	SH6330	*
	287"	4.7	04-03	(fr. 7/03) O.E. 11" Clutch	K70134-02	9	11	1 1/8	10T	SPH061	SH5479	SH6330	NFW9127
				(fr. 7/03) 12" Clutch	K70144-02	67	12	1 1/8	10T	SPH061	SH5479	SH6330	*
			03-02	(to 6/03) O.E. 11" Clutch	K70134-02	9	11	1 1/8	10T	*	SH5479	SH6329	NFW9127
				(to 6/03) 12" Clutch	K70144-02	67	12	1 1/8	10T	*	SH5479	SH6329	*
	318"	5.2	01-00	O.E. 11" Clutch	K70134-02	9	11	1 1/8	10T	SPH025	SH5183	SH6327	NFW7225
				12" Clutch	K70144-02	67	12	1 1/8	10T	SPH025	SH5183	SH6327	*
			99-98	O.E. 11" Clutch	K70134-02	9	11	1 1/8	10T	SPH029	SH5183	SH6327	NFW7225
				12" Clutch	K70144-02	67	12	1 1/8	10T	SPH029	SH5183	SH6327	*
			97-94	O.E. 11" Clutch	K70134-02	9	11	1 1/8	10T	*	SH5143	SH6127	NFW7225
				12" Clutch	K70144-02	67	12	1 1/8	10T	*	SH5143	SH6127	*
	345"	5.7	04-03		K70351-01		11 1/2	1 1/8	10T	*	SH5479	SH6329	*
	360"	5.9	02-00	O.E. 11" Clutch	K70134-02	9	11	1 1/8	10T	SPH025	SH5183	SH6327	*
				12" Clutch	K70144-02	67	12	1 1/8	10T	SPH025	SH5183	SH6327	*
			99-98	O.E. 11" Clutch	K70134-02	9	11	1 1/8	10T	SPH029	SH5183	SH6327	*
				12" Clutch	K70144-02	67	12	1 1/8	10T	SPH029	SH5183	SH6327	*
			97-94		K70144-02	67	12	1 1/8	10T	*	SH5143	SH6127	*
10	505"	8.3	06-04	SRT10	K70192-01		12 1/4	1 1/8	26T	*	SH5173	SH6332	*
RAM 2500													
6	359"	5.9	09-05	6 Spd., Mercedes trans., Kit for DMF	K70283-01	60	12 1/2	1 3/8	10T	SPH031	SH5431	SH6331	DMF91156

* Not Available
Ø Components Available
Š Kit Includes Concentric Slave Cylinder
ƒ Kit Includes Flywheel

© 2014 ZF North American Operations, Inc. All Rights Reserved. No portion of this work may be reproduced or copied by any means without the prior approval of ZF North American Operations, Inc.

SACHS

CLUTCH KIT

Cyl.	CC Cubic Inch	Liter	Year	Application Information	Clutch Kit	Notes Pg.180	Disc Size O.D.	Disc Size I.D.	Disc Size Teeth	PreFilled Master Or System	Master Cylinder	Slave Cylinder	Flywheel
DODGE LIGHT TRUCK (Cont'd)													
RAM 2500 (Cont'd)													
6	359"	5.9	09-05	6 Spd., Mercedes trans., Kit w/ Solid Flywheel	K70479-01F ➲		13	1 3/8	10T	*	*	*	*
				Optional Kit/HD Disc	K70479-1FHD ➲		13	1 3/8	10T	*	*	*	*
				Optional Kit/CB Disc	K70479-1FCB ➲		12 7/8	1 3/8	10T	*	*	*	*
				Optional Kit/Kevlar® Disc	K70479-1FKL ➲		13	1 3/8	10T	*	*	*	*
			05	6 Spd., New Venture/Chrysler trans.	K70279-01		13	1 3/8	10T	*	SH5479	SH6331	NFW1217
				Optional Kit/HD Disc	K70279-01HD	79	13	1 3/8	10T	*	SH5479	SH6331	NFW1217
				Optional Kit/CB Disc	K70279-01CB		12 7/8	1 3/8	10T	*	SH5479	SH6331	NFW1217
				Optional Kit/Kevlar® Disc	K70279-01KL	79	13	1 3/8	10T	*	SH5479	SH6331	NFW1217
			04-03	5 Spd.	K70253-02		12 1/4	1 1/4	10T	*	SH5237	SH6330	NFW7223
				Optional Kit/HD Disc	K70253-02HD	79	12 1/4	1 1/4	10T	*	SH5237	SH6330	NFW7223
				Optional Kit/CB Disc	K70253-02CB	79	12 1/4	1 1/4	10T	*	SH5237	SH6330	NFW7223
				Optional Kit/Kevlar® Disc	K70253-02KL	79	12 1/4	1 1/4	10T	*	SH5237	SH6330	NFW7223
				6 Spd.	K70279-01		13	1 3/8	10T	*	SH5479	SH6330	NFW1217
				Optional Kit/HD Disc	K70279-01HD	79	13	1 3/8	10T	*	SH5479	SH6330	NFW1217
				Optional Kit/CB Disc	K70279-01CB		12 7/8	1 3/8	10T	*	SH5479	SH6330	NFW1217
				Optional Kit/Kevlar® Disc	K70279-01KL	79	13	1 3/8	10T	*	SH5479	SH6330	NFW1217
			02-01	5 Spd.	K70253-02		12 1/4	1 1/4	10T	SPH025	SH5183	SH6327	NFW7223
				Optional Kit/HD Disc	K70253-02HD	79	12 1/4	1 1/4	10T	SPH025	SH5183	SH6327	NFW7223
				Optional Kit/CB Disc	K70253-02CB	79	12 1/4	1 1/4	10T	SPH025	SH5183	SH6327	NFW7223
				Optional Kit/Kevlar® Disc	K70253-02KL	79	12 1/4	1 1/4	10T	SPH025	SH5183	SH6327	NFW7223
				6 Spd.	K70279-01		13	1 3/8	10T	SPH025	SH5183	SH6327	NFW1217
				Optional Kit/HD Disc	K70279-01HD	79	13	1 3/8	10T	SPH025	SH5183	SH6327	NFW1217
				Optional Kit/CB Disc	K70279-01CB		12 7/8	1 3/8	10T	SPH025	SH5183	SH6327	NFW1217
				Optional Kit/Kevlar® Disc	K70279-01KL	79	13	1 3/8	10T	SPH025	SH5183	SH6327	NFW1217
			00-98	5 Spd.	K70253-02		12 1/4	1 1/4	10T	SPH028	SH5183	SH6327	NFW7223
				Optional Kit/HD Disc	K70253-02HD	79	12 1/4	1 1/4	10T	SPH028	SH5183	SH6327	NFW7223
				Optional Kit/CB Disc	K70253-02CB	79	12 1/4	1 1/4	10T	SPH028	SH5183	SH6327	NFW7223
				Optional Kit/Kevlar® Disc	K70253-02KL	79	12 1/4	1 1/4	10T	SPH028	SH5183	SH6327	NFW7223
			97-94		K70119-01		12 1/4	1 1/4	10T	SPH030	SH5143	SH6129	NFW7223
				Optional Kit/HD Disc	K70119-01HD	79	12 1/4	1 1/4	10T	SPH030	SH5143	SH6129	NFW7223
				Optional Kit/CB Disc	K70119-01CB	79	12 1/4	1 1/4	10T	SPH030	SH5143	SH6129	NFW7223
				Optional Kit/Kevlar® Disc	K70119-01KL	79	12 1/4	1 1/4	10T	SPH030	SH5143	SH6129	NFW7223
	408"	6.7	10-07	Kit for DMF	K70283-01	60	12 1/2	1 3/8	10T	SPH031	SH5431	SH6331	DMF91156
				Kit w/ Solid Flywheel	K70479-01F ➲		13	1 3/8	10T	*	*	*	*
				Optional Kit/HD Disc	K70479-1FHD ➲		13	1 3/8	10T	*	*	*	*
				Optional Kit/CB Disc	K70479-1FCB ➲		12 7/8	1 3/8	10T	*	*	*	*
				Optional Kit/Kevlar® Disc	K70479-1FKL ➲		13	1 3/8	10T	*	*	*	*
8	318"	5.2	96-94		K70144-02	67	12	1 1/8	10T	*	SH5143	SH6127	NFW7225
	345"	5.7	08-03		K70351-01		11 1/2	1 1/8	10T	*	SH5479	SH6330	*
	360"	5.9	02-00	O.E. 11" Clutch	K70134-02	9	11	1 1/8	10T	SPH025	SH5183	SH6327	*
				12" Clutch	K70144-02	67	12	1 1/8	10T	SPH025	SH5183	SH6327	*
			99-94		K70144-02	67	12	1 1/8	10T	*	SH5143	SH6327	*

➲ Kit includes Pre-Filled Hydraulics

* Not Available
Ø Components Available
Š Kit Includes Concentric Slave Cylinder
ƒ Kit Includes Flywheel

© 2014 ZF North American Operations, Inc. All Rights Reserved. No portion of this work may be reproduced or copied by any means without the prior approval of ZF North American Operations, Inc.

CLUTCH KIT

Cyl.	CC Cubic Inch	Liter	Year	Application Information	Clutch Kit	Notes Pg.180	Disc Size O.D.	Disc Size I.D.	Disc Size Teeth	PreFilled Master Or System	Master Cylinder	Slave Cylinder	Flywheel
DODGE LIGHT TRUCK (Cont'd)													
RAM 2500 (Cont'd)													
10	488"	8.0	03		K70253-02		12 1/4	1 1/4	10T	*	SH5479	SH6330	*
				Optional Kit/HD Disc	K70253-02HD	79	12 1/4	1 1/4	10T	*	SH5479	SH6330	*
				Optional Kit/CB Disc	K70253-02CB	79	12 1/4	1 1/4	10T	*	SH5479	SH6330	*
				Optional Kit/Kevlar® Disc	K70253-02KL	79	12 1/4	1 1/4	10T	*	SH5479	SH6330	*
			02-00		K70253-02		12 1/4	1 1/4	10T	SPH025	SH5183	SH6327	*
				Optional Kit/HD Disc	K70253-02HD	79	12 1/4	1 1/4	10T	SPH025	SH5183	SH6327	*
				Optional Kit/CB Disc	K70253-02CB	79	12 1/4	1 1/4	10T	SPH025	SH5183	SH6327	*
				Optional Kit/Kevlar® Disc	K70253-02KL	79	12 1/4	1 1/4	10T	SPH025	SH5183	SH6327	*
			99-98		K70253-02		12 1/4	1 1/4	10T	SPH028	SH5183	SH6327	*
				Optional Kit/HD Disc	K70253-02HD	79	12 1/4	1 1/4	10T	SPH028	SH5183	SH6327	*
				Optional Kit/CB Disc	K70253-02CB	79	12 1/4	1 1/4	10T	SPH028	SH5183	SH6327	*
				Optional Kit/Kevlar® Disc	K70253-02KL	79	12 1/4	1 1/4	10T	SPH028	SH5183	SH6327	*
			97-94		K70119-01		12 1/4	1 1/4	10T	SPH030	SH5143	SH6129	*
				Optional Kit/HD Disc	K70119-01HD	79	12 1/4	1 1/4	10T	SPH030	SH5143	SH6129	*
				Optional Kit/CB Disc	K70119-01CB	79	12 1/4	1 1/4	10T	SPH030	SH5143	SH6129	*
				Optional Kit/Kevlar® Disc	K70119-01KL	79	12 1/4	1 1/4	10T	SPH030	SH5143	SH6129	*
RAM 3500													
6	359"	5.9	09-05	6 Spd., Mercedes trans., Kit for DMF	K70283-01	60	12 1/2	1 3/8	10T	SPH031	SH5431	SH6331	DMF91156
				6 Spd., Mercedes trans., Kit w/ Solid Flywheel	K70479-01F ➲		13	1 3/8	10T	*	*	*	*
				Optional Kit/HD Disc	K70479-1FHD ➲		13	1 3/8	10T	*	*	*	*
				Optional Kit/CB Disc	K70479-1FCB ➲		12 7/8	1 3/8	10T	*	*	*	*
				Optional Kit/Kevlar® Disc	K70479-1FKL ➲		13	1 3/8	10T	*	*	*	*
			05	6 Spd., New Venture/Chrysler trans.	K70279-01		13	1 3/8	10T	*	SH5479	SH6331	NFW1217
				Optional Kit/HD Disc	K70279-01HD	79	13	1 3/8	10T	*	SH5479	SH6331	NFW1217
				Optional Kit/CB Disc	K70279-01CB		12 7/8	1 3/8	10T	*	SH5479	SH6331	NFW1217
				Optional Kit/Kevlar® Disc	K70279-01KL	79	13	1 3/8	10T	*	SH5479	SH6331	NFW1217
			04-03	5 Spd.	K70253-02		12 1/4	1 1/4	10T	*	SH5237	SH6330	NFW7223
				Optional Kit/HD Disc	K70253-02HD	79	12 1/4	1 1/4	10T	*	SH5237	SH6330	NFW7223
				Optional Kit/CB Disc	K70253-02CB	79	12 1/4	1 1/4	10T	*	SH5237	SH6330	NFW7223
				Optional Kit/Kevlar® Disc	K70253-02KL	79	12 1/4	1 1/4	10T	*	SH5237	SH6330	NFW7223
				6 Spd.	K70279-01		13	1 3/8	10T	*	SH5479	SH6330	NFW1217
				Optional Kit/HD Disc	K70279-01HD	79	13	1 3/8	10T	*	SH5479	SH6330	NFW1217
				Optional Kit/CB Disc	K70279-01CB		12 7/8	1 3/8	10T	*	SH5479	SH6330	NFW1217
				Optional Kit/Kevlar® Disc	K70279-01KL	79	13	1 3/8	10T	*	SH5479	SH6330	NFW1217
			02-01	5 Spd.	K70253-02		12 1/4	1 1/4	10T	SPH025	SH5183	SH6327	NFW7223
				Optional Kit/HD Disc	K70253-02HD	79	12 1/4	1 1/4	10T	SPH025	SH5183	SH6327	NFW7223
				Optional Kit/CB Disc	K70253-02CB	79	12 1/4	1 1/4	10T	SPH025	SH5183	SH6327	NFW7223
				Optional Kit/Kevlar® Disc	K70253-02KL	79	12 1/4	1 1/4	10T	SPH025	SH5183	SH6327	NFW7223
				6 Spd.	K70279-01		13	1 3/8	10T	SPH025	SH5183	SH6327	NFW1217
				Optional Kit/HD Disc	K70279-01HD	79	13	1 3/8	10T	SPH025	SH5183	SH6327	NFW1217
				Optional Kit/CB Disc	K70279-01CB		12 7/8	1 3/8	10T	SPH025	SH5183	SH6327	NFW1217
				Optional Kit/Kevlar® Disc	K70279-01KL	79	13	1 3/8	10T	SPH025	SH5183	SH6327	NFW1217

➲ Kit includes Pre-Filled Hydraulics

* Not Available
Ø Components Available
Š Kit Includes Concentric Slave Cylinder
ƒ Kit Includes Flywheel

© 2014 ZF North American Operations, Inc. All Rights Reserved. No portion of this work may be reproduced or copied by any means without the prior approval of ZF North American Operations, Inc.

SACHS

CLUTCH KIT

Cyl.	CC Cubic Inch	Liter	Year	Application Information	Clutch Kit	Notes Pg.180	Disc Size O.D.	Disc Size I.D.	Disc Size Teeth	PreFilled Master Or System	Master Cylinder	Slave Cylinder	Flywheel
DODGE LIGHT TRUCK (Cont'd)													
RAM 3500 (Cont'd)													
6	359"	5.9	00-98	5 Spd.	K70253-02		12 1/4	1 1/4	10T	SPH028	SH5183	SH6327	NFW7223
				Optional Kit/HD Disc	K70253-02HD	79	12 1/4	1 1/4	10T	SPH028	SH5183	SH6327	NFW7223
				Optional Kit/CB Disc	K70253-02CB	79	12 1/4	1 1/4	10T	SPH028	SH5183	SH6327	NFW7223
				Optional Kit/Kevlar® Disc	K70253-02KL	79	12 1/4	1 1/4	10T	SPH028	SH5183	SH6327	NFW7223
			97-94		K70119-01		12 1/4	1 1/4	10T	SPH030	SH5143	SH6129	NFW7223
				Optional Kit/HD Disc	K70119-01HD	79	12 1/4	1 1/4	10T	SPH030	SH5143	SH6129	NFW7223
				Optional Kit/CB Disc	K70119-01CB	79	12 1/4	1 1/4	10T	SPH030	SH5143	SH6129	NFW7223
				Optional Kit/Kevlar® Disc	K70119-01KL	79	12 1/4	1 1/4	10T	SPH030	SH5143	SH6129	NFW7223
	408"	6.7	10-07	Kit for DMF	K70283-01	60	12 1/2	1 3/8	10T	SPH031	SH5431	SH6331	DMF91156
				Kit w/ Solid Flywheel	K70479-01F ➲		13	1 3/8	10T	*	*	*	*
				Optional Kit/HD Disc	K70479-1FHD ➲		13	1 3/8	10T	*	*	*	*
				Optional Kit/CB Disc	K70479-1FCB ➲		12 7/8	1 3/8	10T	*	*	*	*
				Optional Kit/Kevlar® Disc	K70479-1FKL ➲		13	1 3/8	10T	*	*	*	*
8	345"	5.7	08-03		K70351-01		11 1/2	1 1/8	10T	*	SH5479	SH6330	*
	360"	5.9	02-00	O.E. 11" Clutch	K70134-02	9	11	1 1/8	10T	SPH025	SH5183	SH6327	*
				12" Clutch	K70144-02	67	12	1 1/8	10T	SPH025	SH5183	SH6327	*
			99-94		K70144-02	67	12	1 1/8	10T	*	SH5143	SH6327	*
10	488"	8.0	03		K70253-02		12 1/4	1 1/4	10T	*	SH5479	SH6330	*
				Optional Kit/HD Disc	K70253-02HD	79	12 1/4	1 1/4	10T	*	SH5479	SH6330	*
				Optional Kit/CB Disc	K70253-02CB	79	12 1/4	1 1/4	10T	*	SH5479	SH6330	*
				Optional Kit/Kevlar® Disc	K70253-02KL	79	12 1/4	1 1/4	10T	*	SH5479	SH6330	*
			02-00		K70253-02		12 1/4	1 1/4	10T	SPH025	SH5183	SH6327	*
				Optional Kit/HD Disc	K70253-02HD	79	12 1/4	1 1/4	10T	SPH025	SH5183	SH6327	*
				Optional Kit/CB Disc	K70253-02CB	79	12 1/4	1 1/4	10T	SPH025	SH5183	SH6327	*
				Optional Kit/Kevlar® Disc	K70253-02KL	79	12 1/4	1 1/4	10T	SPH025	SH5183	SH6327	*
			99-98		K70253-02		12 1/4	1 1/4	10T	SPH028	SH5183	SH6327	*
				Optional Kit/HD Disc	K70253-02HD	79	12 1/4	1 1/4	10T	SPH028	SH5183	SH6327	*
				Optional Kit/CB Disc	K70253-02CB	79	12 1/4	1 1/4	10T	SPH028	SH5183	SH6327	*
				Optional Kit/Kevlar® Disc	K70253-02KL	79	12 1/4	1 1/4	10T	SPH028	SH5183	SH6327	*
			97-94		K70119-01		12 1/4	1 1/4	10T	SPH030	SH5143	SH6129	*
				Optional Kit/HD Disc	K70119-01HD	79	12 1/4	1 1/4	10T	SPH030	SH5143	SH6129	*
				Optional Kit/CB Disc	K70119-01CB	79	12 1/4	1 1/4	10T	SPH030	SH5143	SH6129	*
				Optional Kit/Kevlar® Disc	K70119-01KL	79	12 1/4	1 1/4	10T	SPH030	SH5143	SH6129	*
RAM 4500													
6	408"	6.7	10-08	Kit for DMF	K70283-01	60	12 1/2	1 3/8	10T	*	*	*	DMF91156
RAM 5500													
6	408"	6.7	10-08	Kit for DMF	K70283-01	60	12 1/2	1 3/8	10T	*	*	*	DMF91156
RAMCHARGER													
6	225"	3.7	80		K1858-05	2	11	1	23T	*	*	*	*
				Optional Kit/Diaph. Cover	K1877-06		11	1	23T	*	*	*	*
				Optional Kit/Diaph. w/ HD Disc	K1877-06HD		11	1	23T	*	*	*	*
8	318"	5.2	81-74		K1877-06		11	1	23T	*	*	*	*
				Optional Kit/HD Disc	K1877-06HD		11	1	23T	*	*	*	*
	360"	5.9	81-74		K1877-06		11	1	23T	*	*	*	*
				Optional Kit/HD Disc	K1877-06HD		11	1	23T	*	*	*	*

➲ Kit includes Pre-Filled Hydraulics

* Not Available
Ø Components Available
Š Kit Includes Concentric Slave Cylinder
ƒ Kit Includes Flywheel

© 2014 ZF North American Operations, Inc. All Rights Reserved. No portion of this work may be reproduced or copied by any means without the prior approval of ZF North American Operations, Inc.

CLUTCH KIT

Cyl.	CC Cubic Inch	Liter	Year	Application Information	Clutch Kit	Notes Pg.180	Disc Size O.D.	Disc Size I.D.	Disc Size Teeth	PreFilled Master Or System	Master Cylinder	Slave Cylinder	Flywheel
DODGE LIGHT TRUCK (Cont'd)													
RAMPAGE													
4	135"	2.2	84-82		K0050-03		8 1/2	13/16	18T	*	*	*	*
EAGLE													
2000 GTX (CANADA ONLY)													
4	122"	2.0	93-91	FWD, 8 7/8" Clutch	KF735-01		8 7/8	7/8	20T	*	SH5115	SH6048	*
			92	AWD	KF735-01		8 7/8	7/8	20T	*	SH5115	SH6046	*
			91	FWD, 8 1/2" Clutch	K0107-01		8 1/2	7/8	20T	*	SH5115	SH6048	*
SUMMIT													
4	90"	1.5	96-95		KF621-03		7 7/8	7/8	20T	*	*	SH6046	NFW5106
			94-89		KF621-03		7 7/8	7/8	20T	*	*	SH6048	NFW5106
	97"	1.6	90-89		KF621-03		7 7/8	7/8	20T	*	*	SH6048	NFW5106
	112"	1.8	96-92	incl. Wagon	K0107-01		8 1/2	7/8	20T	*	*	SH6046	*
	143"	2.4	96-92		KF735-01		8 7/8	7/8	20T	*	*	SH6046	*
SUMMIT (CANADA ONLY)													
4	90"	1.5	96-89	Cable Linkage	KF621-03		7 7/8	7/8	20T	*	*	*	NFW5106
			94-89	Hydraulic Linkage	KF621-03		7 7/8	7/8	20T	*	*	SH6048	NFW5106
			92-91		KF600-02		7 1/4	7/8	20T	*	*	SH6013	NFW5106
TALON													
4	107"	1.8	94-93		KF621-03		7 7/8	7/8	20T	*	SH5114	SH6048	NFW5106
	122"	2.0	98-95	Turbo	KF735-01		8 7/8	7/8	20T	*	SH5116	SH6046	*
				Non-Turbo	K70131-01 ƒ◎	10	9	15/16	17T	*	SH5116	SH6111	*
				Optional Power Clutch Kit	PC70131-01 ƒ◎	10	9	15/16	17T	*	SH5116	SH6111	*
			94-91	Turbo, FWD	KF735-01		8 7/8	7/8	20T	*	SH5114	SH6339	*
				Turbo, AWD	KF735-01		8 7/8	7/8	20T	*	SH5114	SH6138	*
				Non-Turbo	K0107-01		8 1/2	7/8	20T	*	SH5114	SH6048	*
			90	Turbo w/o Speed Control	KF735-01		8 7/8	7/8	20T	*	SH5115	SH6339	*
				Turbo w/ Speed Control	KF735-01		8 7/8	7/8	20T	*	SH5114	SH6138	*
				Non-Turbo	K0107-01		8 1/2	7/8	20T	*	SH5115	SH6048	*
VISTA (CANADA ONLY)													
4	92"	1.5	92-90	Cable Linkage	KF621-03		7 7/8	7/8	20T	*	*	*	NFW5106
				Hydraulic Linkage	KF621-03		7 7/8	7/8	20T	*	*	SH6048	NFW5106
	98"	1.5	88		KF621-03		7 7/8	7/8	20T	*	*	SH6048	*
FIAT													
SPIDER 2000													
4	1995cc	2.0	83-82		KF215-01		8 1/2	29/32	20T	*	*	*	*
STRADA													
4	1498cc	1.5	82-79		KF239-01 ◎		7 1/2	3/4	17T	*	*	*	*
X-1/9													
4	1498cc	1.5	83-79		KF239-01 ◎		7 1/2	3/4	17T	*	SH5466	*	*
124													
4	1438cc	1.4	71-68	Spider	KF292-03 ◎		7 7/8	29/32	20T	*	*	*	*
	1608cc	1.6	74-71		KF215-01		8 1/2	29/32	20T	*	*	*	*
			73-71	Spider	KF292-03 ◎		7 7/8	29/32	20T	*	*	*	*
	1756cc	1.8	78-74		KF215-01		8 1/2	29/32	20T	*	*	*	*
	1995cc	2.0	81-79		KF215-01		8 1/2	29/32	20T	*	*	*	*

◎ Kit Only

* Not Available
Ø Components Available
Š Kit Includes Concentric Slave Cylinder
ƒ Kit Includes Flywheel

© 2014 ZF North American Operations, Inc. All Rights Reserved. No portion of this work may be reproduced or copied by any means without the prior approval of ZF North American Operations, Inc.

SACHS

CLUTCH KIT

Cyl.	CC Cubic Inch	Liter	Year	Application Information	Clutch Kit	Notes Pg.180	Disc Size O.D.	Disc Size I.D.	Disc Size Teeth	PreFilled Master Or System	Master Cylinder	Slave Cylinder	Flywheel
FIAT (Cont'd)													
131													
4	1756cc	1.8	78-75	Mirafiori	KF215-01		8 1/2	29/32	20T	*	*	*	*
	1995cc	2.0	81-79	Brava	KF215-01		8 1/2	29/32	20T	*	*	*	*
FORD													
ASPIRE													
4	81"	1.3	97-94		K0071-01		7 1/8	3/4	18T	*	*	*	NFW1125
CONTOUR													
4	121"	2.0	00-95		K70124-01 Š		9 7/16	1	23T	*	*	SB60092	*
6	153"	2.5	00-95	incl. SVT	K70125-01 Š		9 7/16	1	23T	*	*	SB60093	NFW1150
CUSTOM													
6	240"	3.9	72-68	10 1/2" Clutch	K0648-01	2	10 1/2	1 1/16	10T	*	*	*	*
				10" Clutch	K0030-04		10	1 1/16	10T	*	*	*	*
				11" Clutch	K0465-02	2	11	1 1/16	10T	*	*	*	*
				Optional Kit/Diaph. Cover	K0465-01		11	1 1/16	10T	*	*	*	*
			66	10" Clutch	K0030-04		10	1 1/16	10T	*	*	*	*
				10 1/2" Clutch	K0648-01	2	10 1/2	1 1/16	10T	*	*	*	*
				11" Clutch	K0465-02	2	11	1 1/16	10T	*	*	*	*
				Optional Kit/Diaph. Cover	K0465-01		11	1 1/16	10T	*	*	*	*
8	260"	4.3	64	10" Clutch	K0030-04		10	1 1/16	10T	*	*	*	*
				10 1/2" Clutch	K0648-01	2	10 1/2	1 1/16	10T	*	*	*	*
	289"	4.7	67-65	10" Clutch	K0030-04		10	1 1/16	10T	*	*	*	*
				10 1/2" Clutch	K0648-01	2	10 1/2	1 1/16	10T	*	*	*	*
	302"	5.0	72-68	3 Spd., 10" Clutch	K0030-04		10	1 1/16	10T	*	*	*	*
				3 Spd., 10 1/2" Clutch	K0648-01	2	10 1/2	1 1/16	10T	*	*	*	*
			71-69	3 Spd., 11" Clutch	K0465-02	2	11	1 1/16	10T	*	*	*	*
				Optional Kit/Diaph. Cover	K0465-01		11	1 1/16	10T	*	*	*	*
	351"	5.8	72-69	10" Clutch	K0030-04		10	1 1/16	10T	*	*	*	*
				10 1/2" Clutch	K0648-01	2	10 1/2	1 1/16	10T	*	*	*	*
				11" Clutch	K0465-02	2	11	1 1/16	10T	*	*	*	*
				Optional Kit/Diaph. Cover	K0465-01		11	1 1/16	10T	*	*	*	*
	352"	5.8	65-64		K0465-02	2	11	1 1/16	10T	*	*	*	*
				Optional Kit/Diaph. Cover	K0465-01		11	1 1/16	10T	*	*	*	*
	390"	6.4	71-64	3 & 4 Spd.	K0465-02	2	11	1 1/16	10T	*	*	*	*
				Optional Kit/Diaph. Cover	K0465-01		11	1 1/16	10T	*	*	*	*
CUSTOM 500													
6	240"	3.9	72-65	10" Clutch	K0030-04		10	1 1/16	10T	*	*	*	*
				10 1/2" Clutch	K0648-01	2	10 1/2	1 1/16	10T	*	*	*	*
				11" Clutch	K0465-02	2	11	1 1/16	10T	*	*	*	*
				Optional Kit/Diaph. Cover	K0465-01		11	1 1/16	10T	*	*	*	*
8	260"	4.3	64	10" Clutch	K0030-04		10	1 1/16	10T	*	*	*	*
				10 1/2" Clutch	K0648-01	2	10 1/2	1 1/16	10T	*	*	*	*
	289"	4.7	67-64	10" Clutch	K0030-04		10	1 1/16	10T	*	*	*	*
				10 1/2" Clutch	K0648-01	2	10 1/2	1 1/16	10T	*	*	*	*
	302"	5.0	72-68	3 Spd., 10" Clutch	K0030-04		10	1 1/16	10T	*	*	*	*
				3 Spd., 10 1/2" Clutch	K0648-01	2	10 1/2	1 1/16	10T	*	*	*	*
			71-69	3 Spd., 11" Clutch	K0465-02	2	11	1 1/16	10T	*	*	*	*
				Optional Kit/Diaph. Cover	K0465-01		11	1 1/16	10T	*	*	*	*

* Not Available
Ø Components Available
Š Kit Includes Concentric Slave Cylinder
ƒ Kit Includes Flywheel

© 2014 ZF North American Operations, Inc. All Rights Reserved. No portion of this work may be reproduced or copied by any means without the prior approval of ZF North American Operations, Inc.

CLUTCH KIT

Cyl.	CC Cubic Inch	Liter	Year	Application Information	Clutch Kit	Notes Pg.180	Disc Size O.D.	Disc Size I.D.	Disc Size Teeth	PreFilled Master Or System	Master Cylinder	Slave Cylinder	Flywheel
FORD (Cont'd)													
CUSTOM 500 (Cont'd)													
8	351"	5.8	72-69	10" Clutch	K0030-04		10	1 1/16	10T	*	*	*	*
				10 1/2" Clutch	K0648-01	2	10 1/2	1 1/16	10T	*	*	*	*
				11" Clutch	K0465-02	2	11	1 1/16	10T	*	*	*	*
				Optional Kit/Diaph. Cover	K0465-01		11	1 1/16	10T	*	*	*	*
	352"	5.8	65-64		K0465-02	2	11	1 1/16	10T	*	*	*	*
				Optional Kit/Diaph. Cover	K0465-01		11	1 1/16	10T	*	*	*	*
	390"	6.4	71-66	3 & 4 Spd.	K0465-02	2	11	1 1/16	10T	*	*	*	*
				Optional Kit/Diaph. Cover	K0465-01		11	1 1/16	10T	*	*	*	*
			64	3 & 4 Spd.	K0465-02	2	11	1 1/16	10T	*	*	*	*
				Optional Kit/Diaph. Cover	K0465-01		11	1 1/16	10T	*	*	*	*
ESCORT													
4	110"	1.8	96-91	GT	KF638-04		8 1/2	15/16	22T	*	SH5242	SH6050	*
	116"	1.9	96-91		K1122-01		7 7/8	7/8	20T	*	SH5242	SH6051	NFW1105
			90-85		K0036-03	35	8 1/2	7/8	20T	*	*	*	NFW1120
	121"	2.0	03-98	ZX2, DOHC	K70311-01		8 7/8	15/16	22T	*	SH5242	SH6181	NFW9134
			00-99	ZX2 S/R, DOHC	*					*	SH5242	SH6181	*
	122"	2.0	02-97	SOHC	K70311-01		8 7/8	15/16	22T	*	SH5242	SH6181	NFW1143
EXP													
4	116"	1.9	88-86		K0036-03	35	8 1/2	7/8	20T	*	*	*	NFW1120
FAIRLANE													
6	200"	3.3	66	3 Spd.	K0648-01	2	10 1/2	1 1/16	10T	*	*	*	*
	250"	4.1	70-69	10" Clutch	K0030-04		10	1 1/16	10T	*	*	*	*
				10 1/2" Clutch	K0648-01	2	10 1/2	1 1/16	10T	*	*	*	*
8	221"	3.6	63	10" Clutch	K0030-04		10	1 1/16	10T	*	*	*	*
				10 1/2" Clutch	K0648-01	2	10 1/2	1 1/16	10T	*	*	*	*
	260"	4.3	64-63	10" Clutch	K0030-04		10	1 1/16	10T	*	*	*	*
				10 1/2" Clutch	K0648-01	2	10 1/2	1 1/16	10T	*	*	*	*
	289"	4.7	68-64	2 bbl., 10" Clutch	K0030-04		10	1 1/16	10T	*	*	*	*
				2 bbl., 10 1/2" Clutch	K0648-01	2	10 1/2	1 1/16	10T	*	*	*	*
	302"	5.0	70-68	3 Spd., 10" Clutch	K0030-04		10	1 1/16	10T	*	*	*	*
				3 Spd., 10 1/2" Clutch	K0648-01	2	10 1/2	1 1/16	10T	*	*	*	*
	351"	5.8	70-69		K0465-02	2	11	1 1/16	10T	*	*	*	*
				Optional Kit/Diaph. Cover	K0465-01		11	1 1/16	10T	*	*	*	*
	390"	6.4	69-66	2 bbl.	K0465-02	2	11	1 1/16	10T	*	*	*	*
				Optional Kit/Diaph. Cover	K0465-01		11	1 1/16	10T	*	*	*	*
FAIRMONT													
4	140"	2.3	83-78		K0315-01		8 1/2	1	23T	*	*	*	*
6	200"	3.3	81-78		K0016-01		9	1 1/16	10T	*	*	*	*
FALCON													
6	250"	4.1	70	10" Clutch	K0030-04		10	1 1/16	10T	*	*	*	*
				10 1/2" Clutch	K0648-01	2	10 1/2	1 1/16	10T	*	*	*	*
8	260"	4.3	64-63	10" Clutch	K0030-04		10	1 1/16	10T	*	*	*	*
				10 1/2" Clutch	K0648-01	2	10 1/2	1 1/16	10T	*	*	*	*
	289"	4.7	68-66	10" Clutch	K0030-04		10	1 1/16	10T	*	*	*	*
				10 1/2" Clutch	K0648-01	2	10 1/2	1 1/16	10T	*	*	*	*

* Not Available
Ø Components Available
Š Kit Includes Concentric Slave Cylinder
ƒ Kit Includes Flywheel

© 2014 ZF North American Operations, Inc. All Rights Reserved. No portion of this work may be reproduced or copied by any means without the prior approval of ZF North American Operations, Inc.

SACHS

CLUTCH KIT

Cyl.	CC Cubic Inch	Liter	Year	Application Information	Clutch Kit	Notes Pg.180	Disc Size O.D.	Disc Size I.D.	Disc Size Teeth	PreFilled Master Or System	Master Cylinder	Slave Cylinder	Flywheel
FORD (Cont'd)													
FALCON (Cont'd)													
8	302"	5.0	70-68	4 bbl., 10" Clutch	K0030-04		10	1 1/16	10T	*	*	*	*
				4 bbl., 10 1/2" Clutch	K0648-01	2	10 1/2	1 1/16	10T	*	*	*	*
	351"	5.8	70		K0465-02	2	11	1 1/16	10T	*	*	*	*
				Optional Kit/Diaph. Cover	K0465-01		11	1 1/16	10T	*	*	*	*
FESTIVA													
4	81"	1.3	93-88		K0071-01		7 1/8	3/4	18T	*	*	*	NFW1125
FIESTA													
4	97"	1.6	14-11	Non-Turbo	K70645-01 ◎					*	*	*	*
	98"	1.6	80-78		KF238-01 ◎		7 1/2	3/4	17T	*	*	*	*
FOCUS													
4	121"	2.0	11-05	5 Spd., SACHS Rigid Disc	K70445-01 Š	14,60	9 3/8	1	23T	*	SH5219	SB60309	DMF91172
			04-02	6 Spd., SVT, LuK Rigid Disc, for vehicles converted to 9-7/16" clutch	K70463-01 Š◎	14,60	9 7/16	1	14T	*	SH5219	SB60308	DMF91152
				Optional Kit w/ DMF, replaces 9" clutch	K70463-01F Š◎	14	9 7/16	1	14T	*	SH5219	SB60308	*
			04-00	5 Spd., DOHC Sprung Disc	K70124-02 Š		8 7/8	1	23T	*	SH5219	SB60309	*
				5 Spd., SOHC Sprung Disc	K70260-01 Š		8 1/2	3/4	17T	*	SH5219	SB60322	*
	140"	2.3	07-03	SACHS Rigid Disc	K70445-01 Š	14,60	9 3/8	1	23T	*	SH5219	SB60309	DMF91130
FUSION													
4	140"	2.3	09-06		K70460-01 ◎		8 7/8	15/16	22T	*	SH5242	SH6181	NFW1000
	152"	2.5	12-10		K70621-01 ◎		9	7/8	22T	*	SH5527	SH6181	*
GALAXIE													
6	240"	3.9	67-65	10" Clutch	K0030-04		10	1 1/16	10T	*	*	*	*
				10 1/2" Clutch	K0648-01	2	10 1/2	1 1/16	10T	*	*	*	*
				11" Clutch	K0465-02	2	11	1 1/16	10T	*	*	*	*
				Optional Kit/Diaph. Cover	K0465-01		11	1 1/16	10T	*	*	*	*
8	260"	4.3	64-63	10" Clutch	K0030-04		10	1 1/16	10T	*	*	*	*
				10 1/2" Clutch	K0648-01	2	10 1/2	1 1/16	10T	*	*	*	*
	289"	4.7	67-63	10" Clutch	K0030-04		10	1 1/16	10T	*	*	*	*
				10 1/2" Clutch	K0648-01	2	10 1/2	1 1/16	10T	*	*	*	*
	352"	5.8	65-63		K0465-02	2	11	1 1/16	10T	*	*	*	*
				Optional Kit/Diaph. Cover	K0465-01		11	1 1/16	10T	*	*	*	*
	390"	6.4	67-63		K0465-02	2	11	1 1/16	10T	*	*	*	*
				Optional Kit/Diaph. Cover	K0465-01		11	1 1/16	10T	*	*	*	*
	406"	6.6	63-62	4 Spd.	K0465-02	2	11	1 1/16	10T	*	*	*	*
				Optional Kit/Diaph. Cover	K0465-01		11	1 1/16	10T	*	*	*	*
GALAXIE 500													
6	240"	3.9	72-65	10" Clutch	K0030-04		10	1 1/16	10T	*	*	*	*
				10 1/2" Clutch	K0648-01	2	10 1/2	1 1/16	10T	*	*	*	*
				11" Clutch	K0465-02	2	11	1 1/16	10T	*	*	*	*
				Optional Kit/Diaph. Cover	K0465-01		11	1 1/16	10T	*	*	*	*
8	260"	4.3	64-63	10" Clutch	K0030-04		10	1 1/16	10T	*	*	*	*
				10 1/2" Clutch	K0648-01	2	10 1/2	1 1/16	10T	*	*	*	*
	289"	4.7	67-63	10" Clutch	K0030-04		10	1 1/16	10T	*	*	*	*
				10 1/2" Clutch	K0648-01	2	10 1/2	1 1/16	10T	*	*	*	*

◎ Kit Only

* Not Available
Ø Components Available
Š Kit Includes Concentric Slave Cylinder
ƒ Kit Includes Flywheel

© 2014 ZF North American Operations, Inc. All Rights Reserved. No portion of this work may be reproduced or copied by any means without the prior approval of ZF North American Operations, Inc.

CLUTCH KIT

Cyl.	CC Cubic Inch	Liter	Year	Application Information	Clutch Kit	Notes Pg.180	Disc Size O.D.	Disc Size I.D.	Disc Size Teeth	PreFilled Master Or System	Master Cylinder	Slave Cylinder	Flywheel
FORD (Cont'd)													
GALAXIE 500 (Cont'd)													
8	302"	5.0	72-68	3 Spd., 10" Clutch	K0030-04		10	1 1/16	10T	*	*	*	*
				3 Spd., 10 1/2" Clutch	K0648-01	2	10 1/2	1 1/16	10T	*	*	*	*
			71-69	3 Spd., 11" Clutch	K0465-02	2	11	1 1/16	10T	*	*	*	*
				Optional Kit/Diaph. Cover	K0465-01		11	1 1/16	10T	*	*	*	*
	351"	5.8	73-69	10" Clutch	K0030-04		10	1 1/16	10T	*	*	*	*
				10 1/2" Clutch	K0648-01	2	10 1/2	1 1/16	10T	*	*	*	*
				11" Clutch	K0465-02	2	11	1 1/16	10T	*	*	*	*
				Optional Kit/Diaph. Cover	K0465-01		11	1 1/16	10T	*	*	*	*
	352"	5.8	65-63		K0465-02	2	11	1 1/16	10T	*	*	*	*
				Optional Kit/Diaph. Cover	K0465-01		11	1 1/16	10T	*	*	*	*
	390"	6.4	71-63	3 & 4 Spd.	K0465-02	2	11	1 1/16	10T	*	*	*	*
				Optional Kit/Diaph. Cover	K0465-01		11	1 1/16	10T	*	*	*	*
	406"	6.7	63-62	4 Spd.	K0465-02	2	11	1 1/16	10T	*	*	*	*
				Optional Kit/Diaph. Cover	K0465-01		11	1 1/16	10T	*	*	*	*
GRANADA													
4	140"	2.3	82-81		K0315-01		8 1/2	1	23T	*	*	*	*
6	250"	4.1	80-75	10" Clutch	K0030-04		10	1 1/16	10T	*	*	*	*
				10 1/2" Clutch	K0648-01	2	10 1/2	1 1/16	10T	*	*	*	*
8	302"	5.0	80-75	10" Clutch	K0030-04		10	1 1/16	10T	*	*	*	*
				10 1/2" Clutch	K0648-01	2	10 1/2	1 1/16	10T	*	*	*	*
LTD													
4	140"	2.3	83		K0315-01		8 1/2	1	23T	*	*	*	*
MAVERICK													
6	250"	4.1	77-74	10" Clutch	K0030-04		10	1 1/16	10T	*	*	*	*
				10 1/2" Clutch	K0648-01	2	10 1/2	1 1/16	10T	*	*	*	*
8	302"	5.0	77-73	10" Clutch	K0030-04		10	1 1/16	10T	*	*	*	*
				10 1/2" Clutch	K0648-01	2	10 1/2	1 1/16	10T	*	*	*	*
MUSTANG													
4	140"	2.3	93-87	5 Spd., BW trans.	K0315-04		8 1/2	1 1/16	10T	*	*	*	NFW1101
			86-83	5 Spd., BW trans.	K0072-03	11	9	1 1/16	10T	*	*	*	NFW1101
			86-81	4 Spd., German trans.	K0315-01		8 1/2	1	23T	*	*	*	NFW1101
			83-81	(fr. 12/80) 5 Spd., Ford trans.	K0315-02		8 1/2	1	23T	*	*	*	*
			83-79	4 Spd., Ford trans.	K0315-04		8 1/2	1 1/16	10T	*	*	*	*
			81	(fr. 10/80 to 11/80) 5 Spd., Ford trans.	K0315-04		8 1/2	1 1/16	10T	*	*	*	*
			81-80	(to 9/80) 5 Spd., Ford trans.	K0315-02		8 1/2	1	23T	*	*	*	*
			80-79	4 Spd., Ford trans.	K0315-04		8 1/2	1 1/16	10T	*	*	*	*
				4 Spd., German trans.	K0315-01		8 1/2	1	23T	*	*	*	*
6	200"	3.3	82-79		K0016-01		9	1 1/16	10T	*	*	*	*
	227"	3.7	14-11		*					*	*	SB60225	*
	232"	3.8	04-01		K70152-01	9	11	1 1/16	10T	*	*	*	NFW1175
			00	Internally Balanced Flywheel (Eng. Stamped AK-531-AB or SK-531-AB)	K70152-01	9	11	1 1/16	10T	*	*	*	NFW1175
				Externally Balanced Flywheel (Eng. Stamped AK-531-AA or SK-531-AA)	K70152-01	9	11	1 1/16	10T	*	*	*	*

* Not Available
Ø Components Available
Š Kit Includes Concentric Slave Cylinder
ƒ Kit Includes Flywheel

© 2014 ZF North American Operations, Inc. All Rights Reserved. No portion of this work may be reproduced or copied by any means without the prior approval of ZF North American Operations, Inc.

SACHS

CLUTCH KIT

Cyl.	CC Cubic Inch	Liter	Year	Application Information	Clutch Kit	Notes Pg.180	Disc Size O.D.	Disc Size I.D.	Disc Size Teeth	PreFilled Master Or System	Master Cylinder	Slave Cylinder	Flywheel
FORD (Cont'd)													
MUSTANG (Cont'd)													
6	232"	3.8	99-94		K70152-01		11	1 1/16	10T	*	*	*	*
	238"	3.9	04		K70152-01	9	11	1 1/16	10T	*	*	*	NFW1175
	245"	4.0	10-07	(fr. 12/4/06)	*					*	SH5310	SB60225	*
			07-05	(to 12/4/06)	K70429-01 Š◎		10	1 1/16	10T	*	SH5310	SB60225	*
	250"	4.1	73-69	10" Clutch	K0030-04		10	1 1/16	10T	*	*	*	*
				10 1/2" Clutch	K0648-01	2	10 1/2	1 1/16	10T	*	*	*	*
8	281"	4.6	10-05		K70428-01 Š	77	11	1 1/16	10T	*	SH5310	SB60225	NFW9126
			04-02		K70272-01		11	1 1/16	10T	*	*	*	*
			01	(to 02/05/01) GT w/ T-45 trans., incl. Bullitt	K0048-01		10 1/2	1 1/16	10T	*	*	*	*
				Optional Power Clutch Kit	PC0048-01		10 1/2	1 1/16	10T	*	*	*	*
				Cobra	K70272-01		11	1 1/16	10T	*	*	*	*
				(fr. 02/05/01) GT w/ TR3650 trans., incl. Bullitt	K70272-01		11	1 1/16	10T	*	*	*	*
			00-96	GT	K0048-01		10 1/2	1 1/16	10T	*	*	*	*
				Optional Power Clutch Kit	PC0048-01		10 1/2	1 1/16	10T	*	*	*	*
			99	Cobra	K70272-01		11	1 1/16	10T	*	*	*	*
	289"	4.7	68-65	10" Clutch	K0030-04		10	1 1/16	10T	*	*	*	*
				10 1/2" Clutch	K0648-01	2	10 1/2	1 1/16	10T	*	*	*	*
	302"	5.0	14-11	GT	*					*	*	SB60319	*
			13-12	Boss 302	*					*	*	SB60319	*
			95-86		K0048-01	45	10 1/2	1 1/16	10T	*	*	*	NFW1100
				Optional Power Clutch Kit	PC0048-01	45	10 1/2	1 1/16	10T	*	*	*	NFW1100
			73-68	10" Clutch	K0030-04		10	1 1/16	10T	*	*	*	*
				10 1/2" Clutch	K0648-01	2	10 1/2	1 1/16	10T	*	*	*	*
	330"	5.4	12-11	Shelby GT500, GT500KR	K70624-01 ◎♈		9 3/4	1 1/8	28T	*	*	SB60317	*
			10-07	Shelby GT500, GT500KR	K70624-01 ◎♈		9 3/4	1 1/8	28T	*	SH5310	SB60317	*
	351"	5.8	73-69	incl. Cobra Jet eng.	K0465-02	2	11	1 1/16	10T	*	*	*	*
				Optional Kit/Diaph. Cover	K0465-01		11	1 1/16	10T	*	*	*	*
	355"	5.8	14-13	Shelby GT500	K70625-01 ◎♈		10 1/8	1 1/8	26T	*	*	SB60317	*
MUSTANG II													
4	140"	2.3	78-74	4 Spd., BW trans.	K0315-04		8 1/2	1 1/16	10T	*	*	*	*
			74	4 Spd., German trans.	K0315-01		8 1/2	1	23T	*	*	*	*
PINTO													
4	122"	2.0	74-71		K0315-01		8 1/2	1	23T	*	*	*	*
	140"	2.3	80-74		K0315-01		8 1/2	1	23T	*	*	*	*
PROBE													
4	121"	2.0	97-93		K70050-01		8 1/2	15/16	22T	*	SH5054	SH6052	*
	133"	2.2	92-89	Non-Turbo	KF638-01		8 7/8	15/16	22T	*	SH5010	SH6005	NFW4702
				Turbo	KF678-03		9 7/16	1 1/16	23T	*	SH5010	SH6053	*
6	152"	2.5	97-93		KF638-01		8 7/8	15/16	22T	*	SH5054	SH6052	*
	182"	3.0	92-90	w/ ABS	K1123-01		9 7/16	1 1/16	23T	*	*	SH6054	*
				w/o ABS	K1123-01		9 7/16	1 1/16	23T	*	SH5010	SH6054	*

◎ Kit Only
♈ Kit does not include Concentric Slave Cylinder and/or Release Bearing (Sold Separately)

* Not Available
Ø Components Available
Š Kit Includes Concentric Slave Cylinder
ƒ Kit Includes Flywheel

© 2014 ZF North American Operations, Inc. All Rights Reserved. No portion of this work may be reproduced or copied by any means without the prior approval of ZF North American Operations, Inc.

CLUTCH KIT

Cyl.	CC Cubic Inch	Liter	Year	Application Information	Clutch Kit	Notes Pg.180	Disc Size O.D.	Disc Size I.D.	Disc Size Teeth	PreFilled Master Or System	Master Cylinder	Slave Cylinder	Flywheel
FORD (Cont'd)													
TAURUS													
4	153"	2.5	89-86		K0036-03	35	8 1/2	7/8	20T	*	*	*	NFW1104
6	182"	3.0	95-89	SHO	K0122-01	12,35	9 3/4	7/8	20T	*	*	*	*
			88-86		K0036-03	35	8 1/2	7/8	20T	*	*	*	NFW1104
TEMPO													
4	140"	2.3	94-86		K0036-03	35	8 1/2	7/8	20T	*	*	*	NFW1104
THUNDERBIRD													
4	140"	2.3	88-87		K0072-03	11	9	1 1/16	10T	*	SH5056	SH6018	NFW1101
			86-83		K0072-03	11	9	1 1/16	10T	*	*	*	NFW1101
6	232"	3.8	93-89	O.E. 11" Clutch	K70130-01 ⚲◎		11	1 1/16	10T	*	*	SH6001WB	*
				Slave Cylinder w/o Bearing	K70130-01 ◎		11	1 1/16	10T	*	*	SH6001	*
TORINO													
6	250"	4.1	74-69	10" Clutch	K0030-04		10	1 1/16	10T	*	*	*	*
				10 1/2" Clutch	K0648-01	2	10 1/2	1 1/16	10T	*	*	*	*
8	289"	4.7	68	2 bbl., 10" Clutch	K0030-04		10	1 1/16	10T	*	*	*	*
				2 bbl., 10 1/2" Clutch	K0648-01	2	10 1/2	1 1/16	10T	*	*	*	*
	302"	5.0	74-73	3 Spd.	K0465-02	2	11	1 1/16	10T	*	*	*	*
				Optional Kit/Diaph. Cover	K0465-01		11	1 1/16	10T	*	*	*	*
			72-68	3 Spd., 10" Clutch	K0030-04		10	1 1/16	10T	*	*	*	*
				3 Spd., 10 1/2" Clutch	K0648-01	2	10 1/2	1 1/16	10T	*	*	*	*
	351"	5.8	74-69		K0465-02	2	11	1 1/16	10T	*	*	*	*
				Optional Kit/Diaph. Cover	K0465-01		11	1 1/16	10T	*	*	*	*
	390"	6.4	69-68	2 bbl.	K0465-02	2	11	1 1/16	10T	*	*	*	*
				Optional Kit/Diaph. Cover	K0465-01		11	1 1/16	10T	*	*	*	*
FORD LIGHT TRUCK													
AEROSTAR													
4	140"	2.3	87-86		K0047-05 ⚲	34	8 7/8	1	23T	*	SH5014	SH6023WB	NFW1145
				Slave Cylinder w/o Bearing	K0047-05	34	8 7/8	1	23T	*	SH5014	SH6023	NFW1145
6	171"	2.8	86		K0047-05 ⚲	34	8 7/8	1	23T	*	SH5014	SH6023WB	NFW1109
				Slave Cylinder w/o Bearing	K0047-05	34	8 7/8	1	23T	*	SH5014	SH6023	NFW1109
	182"	3.0	94-93		K0047-07 ⚲	44	8 7/8	1	23T	*	SH5169	SH6024WB	NFW1115
				Slave Cylinder w/o Bearing	K0047-07	44	8 7/8	1	23T	*	SH5169	SH6024	NFW1115
	183"	3.0	92		K0047-06 ⚲		8 7/8	1	23T	*	SH5059	SH6001WB	NFW1115
				Slave Cylinder w/o Bearing	K0047-06		8 7/8	1	23T	*	SH5059	SH6001	NFW1115
			91-88		K0047-06 ⚲		8 7/8	1	23T	*	SH5060	SH6001WB	NFW1115
				Slave Cylinder w/o Bearing	K0047-06		8 7/8	1	23T	*	SH5060	SH6001	NFW1115
			87-86		K0047-05 ⚲	34	8 7/8	1	23T	*	SH5014	SH6023WB	NFW1115
				Slave Cylinder w/o Bearing	K0047-05	34	8 7/8	1	23T	*	SH5014	SH6023	NFW1115
BRONCO													
6	300"	4.9	92	4 Spd., under 8500 GVW	K0030-02	57	10	1 1/16	10T	*	SH5062	SH6018	NFW1102
				5 Spd., over 8500 GVW	K0064-04 ⚲	57	11	1 1/16	10T	*	SH5062	SH6001WB	NFW1102
				5 Spd., under 8500 GVW	K0030-03 ⚲	57	10	1 1/16	10T	*	SH5062	SH6001WB	NFW1102
				4 Spd., over 8500 GVW	K0064-01	57	11	1 1/16	10T	*	SH5062	SH6018	NFW1102
			91-88	4 Spd., over 8500 GVW	K0064-01	57	11	1 1/16	10T	*	SH5007	SH6018	NFW1102
				4 Spd., under 8500 GVW	K0030-02	57	10	1 1/16	10T	*	SH5007	SH6018	NFW1102
				5 Spd., over 8500 GVW	K0064-04 ⚲	57	11	1 1/16	10T	*	SH5007	SH6001WB	NFW1102
				Slave Cylinder w/o Bearing	K0064-04	57	11	1 1/16	10T	*	SH5007	SH6001	NFW1102

⚲ Slave cylinder includes bearing (not Included in Clutch Kit)
◎ Kit Only

* Not Available
Ø Components Available
Š Kit Includes Concentric Slave Cylinder
ƒ Kit Includes Flywheel

© 2014 ZF North American Operations, Inc. All Rights Reserved. No portion of this work may be reproduced or copied by any means without the prior approval of ZF North American Operations, Inc.

SACHS

CLUTCH KIT

Cyl.	CC Cubic Inch	Liter	Year	Application Information	Clutch Kit	Notes Pg.180	Disc Size O.D.	Disc Size I.D.	Disc Size Teeth	PreFilled Master Or System	Master Cylinder	Slave Cylinder	Flywheel
FORD LIGHT TRUCK (Cont'd)													
BRONCO (Cont'd)													
6	300"	4.9	91-88	5 Spd., under 8500 GVW	K0030-03 ⚲	57	10	1 1/16	10T	*	SH5007	SH6001WB	NFW1102
				Slave Cylinder w/o Bearing	K0030-03	57	10	1 1/16	10T	*	SH5007	SH6001	NFW1102
			87	over 8500 GVW	K0064-01	57	11	1 1/16	10T	*	SH5016	SH6018	NFW1102
			87-83	under 8500 GVW	K0030-02	57	10	1 1/16	10T	*	SH5016	SH6018	NFW1102
			86-84	over 8500 GVW	K0033-01	57	11	1 1/16	10T	*	SH5016	SH6018	NFW1102
			83	Hydraulic Linkage	K0030-02		10	1 1/16	10T	*	SH5016	SH6018	NFW1102
				Mechanical Linkage	K1009-02		11	1 1/16	10T	*	*	*	NFW1102
			82-80		K1009-01		11	1 1/16	10T	*	*	*	NFW1102
8	289"	4.7	67-66	11" Clutch	K0465-02	2	11	1 1/16	10T	*	*	*	*
				Optional Kit/Diaph. Cover	K0465-01		11	1 1/16	10T	*	*	*	*
			66	10" Clutch	K0030-04		10	1 1/16	10T	*	*	*	*
	302"	5.0	96-93		K0064-05 ⚲	44	11	1 1/16	10T	*	SH5061	SH6024WB	NFW1128
				Slave Cylinder w/o Bearing	K0064-05	44	11	1 1/16	10T	*	SH5061	SH6024	NFW1128
				Optional Kit/CB Disc	K0064-05CB ⚲	44	11	1 1/16	10T	*	SH5061	SH6024WB	NFW1128
			92	4 Spd.	K0064-01		11	1 1/16	10T	*	SH5062	SH6001	NFW1128
				5 Spd.	K0064-04 ⚲		11	1 1/16	10T	*	SH5062	SH6001WB	NFW1128
				Slave Cylinder w/o Bearing	K0064-04		11	1 1/16	10T	*	SH5062	SH6001	NFW1128
			91-90	4 Spd.	K0064-01		11	1 1/16	10T	*	SH5007	SH6001	NFW1128
				5 Spd.	K0064-04 ⚲		11	1 1/16	10T	*	SH5007	SH6001WB	NFW1128
				Slave Cylinder w/o Bearing	K0064-04		11	1 1/16	10T	*	SH5007	SH6001	NFW1128
			89-88	4 Spd.	K0064-01		11	1 1/16	10T	*	SH5007	SH6018	NFW1128
				5 Spd.	K0064-04 ⚲		11	1 1/16	10T	*	SH5007	SH6001WB	NFW1128
				Slave Cylinder w/o Bearing	K0064-04		11	1 1/16	10T	*	SH5007	SH6001	NFW1128
			87		K0064-01		11	1 1/16	10T	*	SH5016	SH6018	NFW1128
			86-84	over 8500 GVW	K0033-01	57	11	1 1/16	10T	*	SH5016	SH6018	NFW1128
				under 8500 GVW	K0030-02	57	10	1 1/16	10T	*	SH5016	SH6018	NFW1128
			83		K1009-02		11	1 1/16	10T	*	*	*	NFW1128
			82-80	11" Clutch	K1009-01		11	1 1/16	10T	*	*	*	NFW1128
			77-68		K0465-02	2	11	1 1/16	10T	*	*	*	*
				Optional Kit/Diaph. Cover	K0465-01		11	1 1/16	10T	*	*	*	*
	351"	5.8	96-94	(fr. 2/94)	K70153-01 ⚲	44	11 1/2	1 1/16	10T	*	SH5061	SH6024WB	NFW1130
				Slave Cylinder w/o Bearing	K70153-01	44	11 1/2	1 1/16	10T	*	SH5061	SH6024	NFW1130
			94-93	(to 1/94)	K0064-05 ⚲	44	11	1 1/16	10T	*	SH5061	SH6024WB	NFW1129
				Slave Cylinder w/o Bearing	K0064-05	44	11	1 1/16	10T	*	SH5061	SH6024	NFW1129
				Optional Kit/CB Disc	K0064-05CB ⚲	44	11	1 1/16	10T	*	SH5061	SH6024WB	NFW1129
			92	4 Spd.	K0064-01		11	1 1/16	10T	*	SH5062	SH6001	NFW1129
				5 Spd.	K0064-04 ⚲		11	1 1/16	10T	*	SH5062	SH6001WB	NFW1129
				Slave Cylinder w/o Bearing	K0064-04		11	1 1/16	10T	*	SH5062	SH6001	NFW1129
			91-88	4 Spd.	K0064-01		11	1 1/16	10T	*	SH5007	SH6001	NFW1129
				5 Spd.	K0064-04 ⚲		11	1 1/16	10T	*	SH5007	SH6001WB	NFW1129
				Slave Cylinder w/o Bearing	K0064-04		11	1 1/16	10T	*	SH5007	SH6001	NFW1129
			87-84	over 8500 GVW	K0033-01	57	11	1 1/16	10T	*	SH5016	SH6018	NFW1129
			86-84	under 8500 GVW	K0030-02	57	10	1 1/16	10T	*	SH5016	SH6018	NFW1129
			83		K1009-02		11	1 1/16	10T	*	*	*	NFW1129

⚲ Slave cylinder includes bearing (not Included in Clutch Kit)

* Not Available
Ø Components Available
Š Kit Includes Concentric Slave Cylinder
ƒ Kit Includes Flywheel

© 2014 ZF North American Operations, Inc. All Rights Reserved. No portion of this work may be reproduced or copied by any means without the prior approval of ZF North American Operations, Inc.

CLUTCH KIT

Cyl.	CC Cubic Inch	Liter	Year	Application Information	Clutch Kit	Notes Pg.180	Disc Size O.D.	Disc Size I.D.	Disc Size Teeth	PreFilled Master Or System	Master Cylinder	Slave Cylinder	Flywheel
FORD LIGHT TRUCK (Cont'd)													
BRONCO (Cont'd)													
8	351"	5.8	82-81		K1009-01		11	1 1/16	10T	*	*	*	NFW1129
	400"	6.6	79-78		K1015-01	2	12	1 1/16	10T	*	*	*	*
BRONCO II													
6	171"	2.8	85		K0047-05 ⚲	34	8 7/8	1	23T	*	SH5014	SH6023WB	NFW1109
				Slave Cylinder w/o Bearing	K0047-05	34	8 7/8	1	23T	*	SH5014	SH6023	NFW1109
			84		K0047-04		8 7/8	1	23T	*	SH5014	SH6029	*
	177"	2.9	90-88		K0047-06 ⚲		8 7/8	1	23T	SPM001	SH5060	SH6001WB	NFW1109
			87-86		K0047-05 ⚲	34	8 7/8	1	23T	*	SH5014	SH6023WB	NFW1109
				Slave Cylinder w/o Bearing	K0047-05	34	8 7/8	1	23T	*	SH5014	SH6023	NFW1109
COURIER													
4	110"	1.8	78-77		KF573-02		8 1/2	15/16	22T	*	SH5137	SH6055	*
			76		KF573-02		8 1/2	15/16	22T	*	SH5135	SH6072	*
			75-72		KF573-02		8 1/2	15/16	22T	*	SH5136	SH6072	*
	122"	2.0	82-81		KF573-06		8 1/2	15/16	22T	*	SH5102	SH6055	*
			80-79		KF573-06		8 1/2	15/16	22T	*	*	SH6055	*
	140"	2.3	82-81		KF573-06		8 1/2	15/16	22T	*	SH5102	SH6055	*
			80-79		KF573-06		8 1/2	15/16	22T	*	*	SH6055	*
			78-77		KF573-02		8 1/2	15/16	22T	*	SH5137	SH6072	*
ESCAPE													
4	122"	2.0	04-03	(fr. 11/8/02)	K70311-01		8 7/8	15/16	22T	*	SH5195	SH6164	NFW9134
			03-01	(to 11/8/02)	K70311-01		8 7/8	15/16	22T	*	SH5195	SH6164	*
	140"	2.3	08-05		K70417-01 Š		9 1/2	1	23T	*	*	SB60249	*
	152"	2.5	12-09		K70417-01 Š		9 1/2	1	23T	*	*	SB60249	*
E SERIES													
6	170"	2.8	69-68	10" Clutch	K0030-04		10	1 1/16	10T	*	*	*	*
				10 1/2" Clutch	K0648-01	2	10 1/2	1 1/16	10T	*	*	*	*
	240"	3.9	74-68	exc. 3 Spd.	K0465-02	2	11	1 1/16	10T	*	*	*	*
				Optional Kit/Diaph. Cover	K0465-01		11	1 1/16	10T	*	*	*	*
			71-68	3 Spd.	K0030-04		10	1 1/16	10T	*	*	*	*
	300"	4.9	90-88	GVW over 8500, Stripped Chassis	K0064-04 ⚲	57	11	1 1/16	10T	*	*	SH6001WB	NFW1102
				GVW over 8500, exc. Stripped Chassis	K0064-04 ⚲	57	11	1 1/16	10T	*	SH5007	SH6001WB	NFW1102
				GVW under 8500, Stripped Chassis	K0030-03 ⚲	57	10	1 1/16	10T	*	*	SH6001WB	NFW1102
				GVW under 8500, exc. Stripped Chassis	K0030-03 ⚲	57	10	1 1/16	10T	*	SH5007	SH6001WB	NFW1102
			87	GVW over 8500, Stripped Chassis	K0064-01	57	11	1 1/16	10T	*	SH5401	SH6018	NFW1102
				GVW over 8500, exc. Stripped Chassis	K0064-01	57	11	1 1/16	10T	*	SH5023	SH6018	NFW1102
			87-83	GVW under 8500, Stripped Chassis	K0030-02	57	10	1 1/16	10T	*	SH5401	SH6018	NFW1102
				GVW under 8500, exc. Stripped Chassis	K0030-02	57	10	1 1/16	10T	*	SH5023	SH6018	NFW1102
			86-84	GVW over 8500, Stripped Chassis	K0033-01	57	11	1 1/16	10T	*	SH5401	SH6018	NFW1102
				GVW over 8500, exc. Stripped Chassis	K0033-01	57	11	1 1/16	10T	*	SH5023	SH6018	NFW1102

⚲ Slave cylinder includes bearing (not Included in Clutch Kit)

* Not Available
Ø Components Available
Š Kit Includes Concentric Slave Cylinder
ƒ Kit Includes Flywheel

© 2014 ZF North American Operations, Inc. All Rights Reserved. No portion of this work may be reproduced or copied by any means without the prior approval of ZF North American Operations, Inc.

SACHS

CLUTCH KIT

Cyl.	CC Cubic Inch	Liter	Year	Application Information	Clutch Kit	Notes Pg.180	Disc Size O.D.	Disc Size I.D.	Disc Size Teeth	PreFilled Master Or System	Master Cylinder	Slave Cylinder	Flywheel
FORD LIGHT TRUCK (Cont'd)													
E SERIES (Cont'd)													
6	300"	4.9	83	11" Clutch	K1009-02		11	1 1/16	10T	*	*	*	NFW1102
			82-81	10" Clutch	K0030-04		10	1 1/16	10T	*	*	*	NFW1102
			82-78	11" Clutch	K1009-01		11	1 1/16	10T	*	*	*	NFW1102
			77-72		K0465-02	2	11	1 1/16	10T	*	*	*	*
				Optional Kit/Diaph. Cover	K0465-01		11	1 1/16	10T	*	*	*	*
8	302"	5.0	89-88		K0064-04		11	1 1/16	10T	*	SH5023	SH6001	NFW1128
			87		K0064-01		11	1 1/16	10T	*	SH5023	SH6018	NFW1128
			86	11" Clutch	K0033-01		11	1 1/16	10T	*	SH5023	SH6018	NFW1128
			86-84	10" Clutch	K0030-02		10	1 1/16	10T	*	SH5023	SH6018	NFW1128
			83		K1009-02		11	1 1/16	10T	*	*	*	NFW1128
			82-81	10" Clutch	K0030-04		10	1 1/16	10T	*	*	*	NFW1128
			82-79	11" Clutch	K1009-01		11	1 1/16	10T	*	*	*	NFW1128
			75-68	2 bbl.	K0465-02	2	11	1 1/16	10T	*	*	*	*
				Optional Kit/Diaph. Cover	K0465-01		11	1 1/16	10T	*	*	*	NFW1129
	351"	5.8	90		K0064-04		11	1 1/16	10T	*	*	*	NFW1129
			89-88		K0064-04		11	1 1/16	10T	*	SH5023	SH6001	NFW1129
			87		K0033-01		11	1 1/16	10T	*	SH5016	SH6018	NFW1129
			86-84		K0030-02		10	1 1/16	10T	*	SH5023	SH6018	NFW1129
			83		K0030-02		10	1 1/16	10T	*	*	*	NFW1129
			82-78		K1009-01		11	1 1/16	10T	*	*	*	NFW1129
			77-75		K0465-02	2	11	1 1/16	10T	*	*	*	*
				Optional Kit/Diaph. Cover	K0465-01		11	1 1/16	10T	*	*	*	*
EXPLORER													
6	245"	4.0	03		K70313-01 ⅄		10 1/8	1	23T	*	SH5184	SH6161WB	NFW1182
				Slave Cylinder w/o Bearing	K70313-01		10 1/8	1	23T	*	SH5184	SH6161	NFW1182
			02	exc. Sport	K70313-01 ⅄	60	10 1/8	1	23T	SPM012	SH5184	SH6161WB	DMF91154
				Slave Cylinder w/o Bearing	K70313-01	60	10 1/8	1	23T	SPM012	SH5184	SH6161	DMF91154
			02-01	Sport	K70313-01 ⅄		10 1/8	1	23T	*	SH5184	SH6161WB	NFW1182
				Slave Cylinder w/o Bearing	K70313-01		10 1/8	1	23T	*	SH5184	SH6161	NFW1182
			01	exc. Sport	K70313-01 ⅄		10 1/8	1	23T	SPM012	SH5184	SH6161WB	NFW5318
				Slave Cylinder w/o Bearing	K70313-01		10 1/8	1	23T	SPM012	SH5184	SH6161	NFW5318
			00		K70251-03 ⅄		10 1/8	1	23T	SPM010	SH5184	SH6161WB	NFW5318
				Slave Cylinder w/o Bearing	K70251-03		10 1/8	1	23T	SPM010	SH5184	SH6161	NFW5318
			99-98		K70251-01 ⅄		10 1/8	1	23T	SPM010	SH5184	SH6024WB	NFW5318
				Slave Cylinder w/o Bearing	K70251-01		10 1/8	1	23T	SPM010	SH5184	SH6024	NFW5318
			97-95		K0116-02 ⅄	44	10	1	23T	SPM008	SH5139	SH6024WB	NFW1118
				Slave Cylinder w/o Bearing	K0116-02	44	10	1	23T	SPM008	SH5139	SH6024	NFW1118
			94-93		K0116-02 ⅄	44	10	1	23T	SPM006	SH5063	SH6024WB	NFW1118
				Slave Cylinder w/o Bearing	K0116-02	44	10	1	23T	SPM006	SH5063	SH6024	NFW1118
			92		K0116-01 ⅄		10	1	23T	SPM005	SH5064	SH6001WB	NFW1118
				Slave Cylinder w/o Bearing	K0116-01		10	1	23T	SPM005	SH5064	SH6001	NFW1118
			91		K0116-01 ⅄		10	1	23T	*	SH5060	SH6001WB	NFW1118
				Slave Cylinder w/o Bearing	K0116-01		10	1	23T	*	SH5060	SH6001	NFW1118

⅄ Slave cylinder includes bearing (not Included in Clutch Kit)

* Not Available
Ø Components Available
Š Kit Includes Concentric Slave Cylinder
ƒ Kit Includes Flywheel

© 2014 ZF North American Operations, Inc. All Rights Reserved. No portion of this work may be reproduced or copied by any means without the prior approval of ZF North American Operations, Inc.

CLUTCH KIT

Cyl.	CC Cubic Inch	Liter	Year	Application Information	Clutch Kit	Notes Pg.180	Disc Size O.D.	Disc Size I.D.	Disc Size Teeth	PreFilled Master Or System	Master Cylinder	Slave Cylinder	Flywheel
FORD LIGHT TRUCK (Cont'd)													
EXPLORER SPORT TRAC													
6	245"	4.0	03-01		K70313-01 ⅄		10 1/8	1	23T	*	SH5184	SH6161WB	NFW1182
				Slave Cylinder w/o Bearing	K70313-01		10 1/8	1	23T	*	SH5184	SH6161	NFW1182
F SERIES													
6	215"	3.5	53-51		K0162-01	2	11	1 3/8	10T	*	*	*	*
	223"	3.6	64-54	10" Clutch	K0505-01 ◎	2	10	1 3/8	10T	*	*	*	*
				11" Clutch	K0162-01	2	11	1 3/8	10T	*	*	*	*
	232"	3.8	83		K0030-02		10	1 1/16	10T	*	SH5016	*	NFW1129
			82		K0030-04		10	1 1/16	10T	*	*	*	NFW1129
	240"	3.9	76-66		K0465-02	2	11	1 1/16	10T	*	*	*	*
				Optional Kit/Diaph. Cover	K0465-01		11	1 1/16	10T	*	*	*	*
			65	10" Clutch	K0030-04		10	1 1/16	10T	*	*	*	*
				10 1/2" Clutch	K0648-01	2	10 1/2	1 1/16	10T	*	*	*	*
	256"	4.2	08-99	F150, F150 Heritage, Non-Self Adjusting Kit	K70452-02 ⅄		11 1/2	1 1/16	10T	*	SH5172	SH6161WB	NFW1147
				Optional Kit/Narrow Lining	K70550-02 ⅄		11	1 1/16	10T	*	SH5172	SH6161WB	NFW1147
				F150, F150 Heritage, O.E. Self Adjusting Kit	K70160-04		11 1/2	1 1/16	10T	*	SH5172	SH6161	NFW1147
			98-97	F150, Non-Self Adjusting Kit	K70452-01 ⅄	44	11 1/2	1 1/16	10T	*	SH5172	SH6024WB	NFW1147
				Optional Kit/Narrow Lining	K70550-01 ⅄	44	11	1 1/16	10T	*	SH5172	SH6024WB	NFW1147
				F150, O.E. Self Adjusting Kit	K70160-01	44	11 1/2	1 1/16	10T	*	SH5172	SH6024	NFW1147
	300"	4.9	96-93	F150, F250, 5 Spd., over 8500 GVW	K0064-05 ⅄	44,57	11	1 1/16	10T	*	SH5061	SH6024WB	NFW1102
				Slave Cylinder w/o Bearing	K0064-05	44,57	11	1 1/16	10T	*	SH5061	SH6024	NFW1102
				Optional Kit/CB Disc	K0064-05CB ⅄	44,57	11	1 1/16	10T	*	SH5061	SH6024WB	NFW1102
				F150, F250, 5 Spd., under 8500 GVW	K0030-05 ⅄	44,57	10	1 1/16	10T	*	SH5061	SH6024WB	NFW1102
				Slave Cylinder w/o Bearing	K0030-05	44,57	10	1 1/16	10T	*	SH5061	SH6024	NFW1102
			93	4 Spd., over 8500 GVW	K0064-01	44,57	11	1 1/16	10T	SPH015	SH5061	SH6056	NFW1102
			92	4 Spd., over 8500 GVW	K0064-01	57	11	1 1/16	10T	*	SH5062	SH6018	NFW1102
				4 Spd., under 8500 GVW	K0030-02	57	10	1 1/16	10T	*	SH5062	SH6018	NFW1102
				5 Spd., over 8500 GVW	K0064-04 ⅄	57	11	1 1/16	10T	*	SH5062	SH6001WB	NFW1102
				Slave Cylinder w/o Bearing	K0064-04	57	11	1 1/16	10T	*	SH5062	SH6001	NFW1102
				5 Spd., under 8500 GVW	K0030-03 ⅄	57	10	1 1/16	10T	*	SH5062	SH6001WB	NFW1102
				Slave Cylinder w/o Bearing	K0030-03	57	10	1 1/16	10T	*	SH5062	SH6001	NFW1102
			91-88	4 Spd., over 8500 GVW	K0064-01	43,57	11	1 1/16	10T	*	SH5007	SH6018	NFW1102
				4 Spd., under 8500 GVW	K0030-02	43,57	10	1 1/16	10T	*	SH5007	SH6018	NFW1102
				5 Spd., over 8500 GVW	K0064-04 ⅄	43,57	11	1 1/16	10T	*	SH5007	SH6001WB	NFW1102
				Slave Cylinder w/o Bearing	K0064-04	43,57	11	1 1/16	10T	*	SH5007	SH6001	NFW1102
				5 Spd., under 8500 GVW	K0030-03 ⅄	43,57	10	1 1/16	10T	*	SH5007	SH6001WB	NFW1102
				Slave Cylinder w/o Bearing	K0030-03	43,57	10	1 1/16	10T	*	SH5007	SH6001	NFW1102
			87	over 8500 GVW	K0064-01	43,57	11	1 1/16	10T	*	SH5016	SH6018	NFW1102
			87-84	under 8500 GVW	K0030-02	43,57	10	1 1/16	10T	*	SH5016	SH6018	NFW1102
			86-84	over 8500 GVW	K0033-01	43,57	11	1 1/16	10T	*	SH5016	SH6018	NFW1102
			83	Hydraulic Linkage	K0030-02	43	10	1 1/16	10T	*	SH5016	SH6018	NFW1102
				Mechanical Linkage	K1009-02	43	11	1 1/16	10T	*	*	*	NFW1102

⅄ Slave cylinder includes bearing (not Included in Clutch Kit)
◎ Kit Only

* Not Available
Ø Components Available
Š Kit Includes Concentric Slave Cylinder
ƒ Kit Includes Flywheel

© 2014 ZF North American Operations, Inc. All Rights Reserved. No portion of this work may be reproduced or copied by any means without the prior approval of ZF North American Operations, Inc.

SACHS

CLUTCH KIT

Cyl.	CC Cubic Inch	Liter	Year	Application Information	Clutch Kit	Notes Pg.180	Disc Size O.D.	Disc Size I.D.	Disc Size Teeth	PreFilled Master Or System	Master Cylinder	Slave Cylinder	Flywheel
FORD LIGHT TRUCK (Cont'd)													
F SERIES (Cont'd)													
6	300"	4.9	82-80	10" Clutch	K0030-04		10	1 1/16	10T	*	*	*	NFW1102
				11" Clutch	K1009-01		11	1 1/16	10T	*	*	*	NFW1102
			79-77	(fr. ch. #Y80,001)	K1009-01		11	1 1/16	10T	*	*	*	NFW1102
			77	(to ch. #Y80,000)	K0465-02	2	11	1 1/16	10T	*	*	*	*
				Optional Kit/Diaph. Cover	K0465-01		11	1 1/16	10T	*	*	*	*
			76-65		K0465-02	2	11	1 1/16	10T	*	*	*	*
				Optional Kit/Diaph. Cover	K0465-01		11	1 1/16	10T	*	*	*	*
8	239"	3.9	55-48	10" Clutch	K0505-01 ◎	2	10	1 3/8	10T	*	*	*	*
	255"	4.2	82-81		K0030-04		10	1 1/16	10T	*	*	*	NFW1128
	272"	4.4	57-55	10" Clutch	K0505-01 ◎	2	10	1 3/8	10T	*	*	*	*
				11" Clutch	K0162-01	2	11	1 3/8	10T	*	*	*	*
	281"	4.6	04-01	F150, Non-Self Adjusting Kit	K70452-02 ⚲		11 1/2	1 1/16	10T	*	SH5172	SH6161WB	*
				Optional Kit/Narrow Lining	K70550-02 ⚲		11	1 1/16	10T	*	SH5172	SH6161WB	*
				F150, O.E. Self Adjusting Kit	K70160-04		11 1/2	1 1/16	10T	*	SH5172	SH6161	*
			00-97	F150, F250, Non-Self Adjusting Kit	K70452-01 ⚲	44	11 1/2	1 1/16	10T	*	SH5172	SH6024WB	*
				Optional Kit/Narrow Lining	K70550-01 ⚲	44	11	1 1/16	10T	*	SH5172	SH6024WB	*
				F150, F250, O.E. Self Adjusting Kit	K70160-01	44	11 1/2	1 1/16	10T	*	SH5172	SH6024	*
	292"	4.8	60-57	11" Clutch	K0162-01	2	11	1 3/8	10T	*	*	*	*
			58-57	10" Clutch	K0505-01 ◎	2	10	1 3/8	10T	*	*	*	*
	302"	5.0	96-93	F150, F250, 5 Spd.	K0064-05 ⚲	44	11	1 1/16	10T	*	SH5061	SH6024WB	NFW1128
				Slave Cylinder w/o Bearing	K0064-05	44	11	1 1/16	10T	*	SH5061	SH6024	NFW1128
				Optional Kit/CB Disc	K0064-05CB ⚲	44	11	1 1/16	10T	*	SH5061	SH6024WB	NFW1128
			94-93	F150, F250, 4 Spd.	K0064-01	44	11	1 1/16	10T	SPH015	SH5061	SH6056	NFW1128
			92	F150, F250, 4 Spd.	K0064-01		11	1 1/16	10T	*	SH5062	SH6018	NFW1128
				F150, F250, 5 Spd.	K0064-04 ⚲		11	1 1/16	10T	*	SH5062	SH6001WB	NFW1128
				Slave Cylinder w/o Bearing	K0064-04		11	1 1/16	10T	*	SH5062	SH6001	NFW1128
			91-88	4 Spd.	K0064-01	43	11	1 1/16	10T	*	SH5007	SH6018	NFW1128
				5 Spd.	K0064-04 ⚲	43	11	1 1/16	10T	*	SH5007	SH6001WB	NFW1128
				Slave Cylinder w/o Bearing	K0064-04	43	11	1 1/16	10T	*	SH5007	SH6001	NFW1128
			87		K0064-01	43	11	1 1/16	10T	*	SH5016	SH6018	NFW1128
			86-84	over 8500 GVW	K0033-01	43,57	11	1 1/16	10T	*	SH5016	SH6018	NFW1128
				under 8500 GVW	K0030-02	43,57	10	1 1/16	10T	*	SH5016	SH6018	NFW1128
			83		K1009-02	43	11	1 1/16	10T	*	SH5016	SH6057	NFW1128
			82-81	4x2, 10" Clutch	K0030-04		10	1 1/16	10T	*	SH5016	SH6057	NFW1128
				11" Clutch	K1009-01		11	1 1/16	10T	*	*	*	NFW1128
			80	4x2, 10" Clutch	K0030-04		10	1 1/16	10T	*	SH5016	SH6057	NFW1129
			80-77	(fr. ch.#Y80,001) 11" Clutch	K1009-01		11	1 1/16	10T	*	*	*	NFW1129
			77-75	(to ch. #Y80,000)	K0465-02	2	11	1 1/16	10T	*	*	*	*
				Optional Kit/Diaph. Cover	K0465-01		11	1 1/16	10T	*	*	*	NFW1129
			69		K0465-02	2	11	1 1/16	10T	*	*	*	*
				Optional Kit/Diaph. Cover	K0465-01		11	1 1/16	10T	*	*	*	NFW1129
	330"	5.4	10-07	(fr. 12/06) F250 SD, F350 SD	K70430-01 ◎		11 7/8	1 1/4	10T	SPH068	*	*	NFW9128
			07-99	(to 12/06) F250 SD, F350 SD	K70430-01 ◎		11 7/8	1 1/4	10T	SPH007	SH5486	SH6157	NFW9128

⚲ Slave cylinder includes bearing (not Included in Clutch Kit)
◎ Kit Only

* Not Available
Ø Components Available
Š Kit Includes Concentric Slave Cylinder
ƒ Kit Includes Flywheel

© 2014 ZF North American Operations, Inc. All Rights Reserved. No portion of this work may be reproduced or copied by any means without the prior approval of ZF North American Operations, Inc.

CLUTCH KIT

Cyl.	CC Cubic Inch	Liter	Year	Application Information	Clutch Kit	Notes Pg.180	Disc Size O.D.	Disc Size I.D.	Disc Size Teeth	PreFilled Master Or System	Master Cylinder	Slave Cylinder	Flywheel
FORD LIGHT TRUCK (Cont'd)													
F SERIES (Cont'd)													
8	351"	5.8	97-94	(fr. 2/94) F150, F250, F350, Non-Series Damper	K70153-01 ♈	44	11 1/2	1 1/16	10T	*	SH5061	SH6024WB	NFW1130
				Slave Cylinder w/o Bearing	K70153-01	44	11 1/2	1 1/16	10T	*	SH5061	SH6024	NFW1130
			94-93	(to 1/94) F150, F250, F350, 5 Spd.	K0064-05 ♈	44	11	1 1/16	10T	*	SH5061	SH6024WB	NFW1129
				Slave Cylinder w/o Bearing	K0064-05	44	11	1 1/16	10T	*	SH5061	SH6024	NFW1129
				Optional Kit/CB Disc	K0064-05CB ♈	44	11	1 1/16	10T	*	SH5061	SH6024WB	NFW1129
			93	F150, F250, 4 Spd.	K0064-01	44	11	1 1/16	10T	SPH015	SH5061	SH6056	NFW1129
			92	F150, F250, F350, 4 Spd.	K0064-01		11	1 1/16	10T	*	SH5062	SH6018	NFW1129
				F150, F250, F350, 5 Spd.	K0064-04 ♈		11	1 1/16	10T	*	SH5062	SH6001WB	NFW1129
				Slave Cylinder w/o Bearing	K0064-04		11	1 1/16	10T	*	SH5062	SH6001	NFW1129
			91-88	4 Spd.	K0064-01	43	11	1 1/16	10T	*	SH5007	SH6018	NFW1129
				5 Spd.	K0064-04 ♈	43	11	1 1/16	10T	*	SH5007	SH6001WB	NFW1129
				Slave Cylinder w/o Bearing	K0064-04	43	11	1 1/16	10T	*	SH5007	SH6001	NFW1129
			87-84	over 8500 GVW	K0033-01	43,57	11	1 1/16	10T	*	SH5016	SH6018	NFW1129
				under 8500 GVW	K0030-02	43,57	10	1 1/16	10T	*	SH5016	SH6018	NFW1129
			83		K1009-02	43	11	1 1/16	10T	*	SH5016	SH6057	NFW1129
			82-81		K1009-01		11	1 1/16	10T	*	SH5016	SH6057	NFW1129
	352"	5.8	67-65		K0465-02	2	11	1 1/16	10T	*	*	*	*
			58-57		K0505-01 ◎	2	10	1 3/8	10T	*	*	*	*
	360"	5.9	76-68	11" Clutch	K0465-02	2	11	1 1/16	10T	*	*	*	NFW1146
				Optional Kit/Diaph. Cover	K0465-01		11	1 1/16	10T	*	*	*	NFW1146
	363"	6.0	07-03	F250 SD, F350 SD, Kit for Solid Flywheel	K70432-01 ♉		13	1 3/8	10T	SPH064	SH5486	SH6417	NFW1190
	390"	6.4	76-70	11" Clutch	K0465-02	2	11	1 1/16	10T	*	*	*	*
				Optional Kit/Diaph. Cover	K0465-01		11	1 1/16	10T	*	*	*	*
				11 1/2" Clutch	K0622-01 ◎	2	11 1/2	1 1/16	10T	*	*	*	*
	391"	6.4	10-08	F250 SD, F350 SD	K70432-01		13	1 3/8	10T	SPH069	*	*	*
	400"	6.6	82-77		K1015-01	2	12	1 1/16	10T	*	*	*	*
	420"	6.9	87-83	F250, F350, 4 Spd., T-19 trans.	K0033-02	43	11	1 1/16	10T	*	SH5016	SH6057	*
	445"	7.3	03-99	F250 SD, F350 SD	K70241-01	72	13	1 3/8	10T	SPH032	SH5193	SH6156	NFW1171
				Optional Kit/HD Disc	K70241-01HD	72,79	13	1 3/8	10T	SPH032	SH5193	SH6156	NFW1171
				Optional Kit/CB Disc	K70241-01CB	72,79	13	1 3/8	10T	SPH032	SH5193	SH6156	NFW1171
				Optional Kit/Kevlar® Disc	K70241-01KL	72	13	1 3/8	10T	SPH032	SH5193	SH6156	NFW1171
			97-94	F Super Duty, F250, F350, Turbo w/ DFI, Kit for DMF	K70120-01	44,60	12 1/4	1 1/4	10T	SPH005	SH5061	SH6155	*
				F Super Duty, F250, F350, Turbo w/ DFI, Kit for Solid Flywheel	K70263-01	44	13	1 1/4	10T	SPH005	SH5061	SH6155	NFW1068
				Optional Kit/HD Disc	K70263-01HD	44,79	13	1 1/4	10T	SPH005	SH5061	SH6155	NFW1068
				Optional Kit/CB Disc	K70263-01CB	44,79	13	1 1/4	10T	SPH005	SH5061	SH6155	NFW1068
				Optional Valeo Kit	K70337-01 ◎	44	13	1 1/4	10T	SPH005	SH5061	SH6155	NFW1171
			94-93	F250, F350, Non-Turbo, Non-Factory Kit for Solid Flywheel	K70244-01	44	12 1/4	1 1/4	10T	SPH005	SH5061	*	NFW1069
				Optional Kit for Heavy Duty Hydraulics	K70244-01	44	12 1/4	1 1/4	10T	SPH005	SH5062	SH6155	NFW1069
				Optional Kit/HD Disc	K70244-01HD	44,79	12 1/4	1 1/4	10T	SPH005	SH5061	*	NFW1069
				Optional Kit/HD Disc for Heavy Duty Hydraulics	K70244-01HD	44,79	12 1/4	1 1/4	10T	SPH005	SH5062	SH6155	NFW1069

♈ Slave cylinder includes bearing (not Included in Clutch Kit)
◎ Kit Only
♉ Flywheel does not come with bolts
* Not Available
Ø Components Available
Š Kit Includes Concentric Slave Cylinder
ƒ Kit Includes Flywheel

© 2014 ZF North American Operations, Inc. All Rights Reserved. No portion of this work may be reproduced or copied by any means without the prior approval of ZF North American Operations, Inc.

SACHS

CLUTCH KIT

Cyl.	CC Cubic Inch	Liter	Year	Application Information	Clutch Kit	Notes Pg.180	Disc Size O.D.	Disc Size I.D.	Disc Size Teeth	PreFilled Master Or System	Master Cylinder	Slave Cylinder	Flywheel
FORD LIGHT TRUCK (Cont'd)													
F SERIES (Cont'd)													
8	445"	7.3	94-93	Optional Kit/CB Disc	K70244-01CB	44	12 1/4	1 1/4	10T	SPH005	SH5061	*	NFW1069
				Optional Kit/CB Disc for Heavy Duty Hydraulics	K70244-01CB	44	12 1/4	1 1/4	10T	SPH005	SH5062	SH6155	NFW1069
				F250, F350, Non-Turbo, Factory Kit for Solid Flywheel	K70244-01	44	12 1/4	1 1/4	10T	SPH005	SH5061	*	NFW1067
				F Super Duty, F250, F350, Factory Turbo w/ IFI, Kit for DMF	K70100-04	44	11 7/8	1 1/4	10T	SPH005	SH5061	*	*
				Optional DMF Kit w/ HD Rigid Disc	K70100-02	44	11 7/8	1 1/4	10T	SPH005	SH5061	*	*
			92	F250, F350, Non-Turbo, Non-Factory Kit for Solid Flywheel	K70244-01		12 1/4	1 1/4	10T	*	SH5062	SH6057	NFW1069
				Optional Kit/HD Disc	K70244-01HD	79	12 1/4	1 1/4	10T	*	SH5062	SH6057	NFW1069
				Optional Kit/CB Disc	K70244-01CB		12 1/4	1 1/4	10T	*	SH5062	SH6057	NFW1069
				F250, F350, Non-Turbo, Kit for DMF	K70100-04		11 7/8	1 1/4	10T	*	SH5062	SH6057	*
				Optional DMF Kit w/ HD Rigid Disc	K70100-02		11 7/8	1 1/4	10T	*	SH5062	SH6057	*
			91-88	F Super Duty, F250, F350, Non-Turbo, Non-Factory Kit for Solid Flywheel	K70244-01	43	12 1/4	1 1/4	10T	*	SH5007	SH6057	NFW1069
				Optional Kit/HD Disc	K70244-01HD	43,79	12 1/4	1 1/4	10T	*	SH5007	SH6057	NFW1069
				Optional Kit/CB Disc	K70244-01CB	43	12 1/4	1 1/4	10T	*	SH5007	SH6057	NFW1069
				F Super Duty, F250, F350, Non-Turbo, Kit for DMF	K70100-04	43	11 7/8	1 1/4	10T	*	SH5007	SH6057	*
				Optional DMF Kit w/ HD Rigid Disc	K70100-02	43	11 7/8	1 1/4	10T	*	SH5007	SH6057	*
	460"	7.5	97-93	F Super Duty, F53, F250, F350	K70102-01	44	12 1/4	1 1/4	10T	SPH005	SH5061	SH6155	NFW9121
			92	F250, F350, Non-Turbo w/ ZF trans.	K0058-01	62	12	1 1/4	10T	*	SH5062	SH6057	NFW9121
				Optional Kit/HD Disc	K0058-01HD	62	12	1 1/4	10T	*	SH5062	SH6057	NFW9121
			91-87	(fr. 6/87) ZF trans.	K0058-01	62	12	1 1/4	10T	*	SH5007	SH6057	NFW9121
				Optional Kit/HD Disc	K0058-01HD	62	12	1 1/4	10T	*	SH5007	SH6057	NFW9121
			87-83	(to 5/87) T-19 trans., 11" Clutch	K0033-01	43	11	1 1/16	10T	*	SH5016	SH6057	NFW1129
			79-74		K1015-01	2	12	1 1/16	10T	*	*	*	*
10	415"	6.8	10-07	(fr. 12/06) F250 SD, F350 SD, Non-Self Adjusting Kit	K70631-01		12	1 1/4	10T	SPH068	*	*	*
				(fr. 12/06) F250 SD, F350 SD, O.E. Self Adjusting Kit	K70431-01		12	1 1/4	10T	SPH068	*	*	*
			07-99	(to 12/06) F250 SD, F350 SD, Non-Self Adjusting Kit	K70631-01		12	1 1/4	10T	SPH068	SH5486	SH6157	*
				(to 12/06) F250 SD, F350 SD, O.E. Self Adjusting Kit	K70431-01		12	1 1/4	10T	SPH007	SH5486	SH6157	*
P SERIES													
6	170"	2.8	67-65	10" Clutch	K0030-04		10	1 1/16	10T	*	*	*	*
				10 1/2" Clutch	K0648-01	2	10 1/2	1 1/16	10T	*	*	*	*
	240"	3.9	72-68		K0465-02	2	11	1 1/16	10T	*	*	*	*
	300"	4.9	77-68		K0465-02	2	11	1 1/16	10T	*	*	*	*
				Optional Kit/Diaph. Cover	K0465-01		11	1 1/16	10T	*	*	*	*

* Not Available
Ø Components Available
Š Kit Includes Concentric Slave Cylinder
ƒ Kit Includes Flywheel

© 2014 ZF North American Operations, Inc. All Rights Reserved. No portion of this work may be reproduced or copied by any means without the prior approval of ZF North American Operations, Inc.

CLUTCH KIT

Cyl.	CC Cubic Inch	Liter	Year	Application Information	Clutch Kit	Notes Pg.180	Disc Size O.D.	Disc Size I.D.	Disc Size Teeth	PreFilled Master Or System	Master Cylinder	Slave Cylinder	Flywheel
FORD LIGHT TRUCK (Cont'd)													
RANCHERO													
6	250"	4.1	73-70		K0030-04		10	1 1/16	10T	*	*	*	*
8	302"	5.0	73-70	3 Spd., 10" Clutch	K0030-04		10	1 1/16	10T	*	*	*	*
				3 Spd., 10 1/2" Clutch	K0648-01	2	10 1/2	1 1/16	10T	*	*	*	*
	351"	5.8	74-70		K0465-02	2	11	1 1/16	10T	*	*	*	*
				Optional Kit/Diaph. Cover	K0465-01		11	1 1/16	10T	*	*	*	*
	390"	6.4	69-67		K0465-02	2	11	1 1/16	10T	*	*	*	*
				Optional Kit/Diaph. Cover	K0465-01		11	1 1/16	10T	*	*	*	*
RANGER													
4	122"	2.0	88		K0047-06 ⅄		8 7/8	1	23T	SPM001	SH5060	SH6001WB	NFW1101
			87-85		K0047-05 ⅄	34	8 7/8	1	23T	*	SH5014	SH6023WB	NFW1101
				Slave Cylinder w/o Bearing	K0047-05	34	8 7/8	1	23T	*	SH5014	SH6023	NFW1101
			84-83		K0047-04		8 7/8	1	23T	*	SH5014	SH6018	NFW1101
	135"	2.2	84-83		KF604-01		8 1/2	15/16	22T	*	SH5014	SH6125	*
	140"	2.3	11-01	O.E. Self Adjusting Kit	K70154-04 ⅄◎		9	1	23T	SPM012	SH5184	SH6161WB	NFW9125
				Slave Cylinder w/o Bearing	K70154-04		9	1	23T	SPM012	SH5184	SH6161	NFW9125
			97-95	O.E. Self Adjusting Kit	K70154-04 ⅄◎	44	9	1	23T	SPM009	SH5139	SH6024WB	NFW1145
				Slave Cylinder w/o Bearing	K70154-04	44	9	1	23T	SPM009	SH5139	SH6024	NFW1145
			94-93		K0047-07 ⅄	44	8 7/8	1	23T	SPM007	SH5063	SH6024WB	NFW1101
				Slave Cylinder w/o Bearing	K0047-07	44	8 7/8	1	23T	SPM007	SH5063	SH6024	NFW1101
			92		K0047-06 ⅄		8 7/8	1	23T	SPM004	SH5064	SH6001WB	NFW1101
				Slave Cylinder w/o Bearing	K0047-06		8 7/8	1	23T	SPM004	SH5064	SH6001	NFW1101
			91-88		K0047-06 ⅄		8 7/8	1	23T	*	SH5060	SH6001WB	NFW1101
				Slave Cylinder w/o Bearing	K0047-06		8 7/8	1	23T	*	SH5060	SH6001	NFW1101
			87-85		K0047-05 ⅄	34	8 7/8	1	23T	*	SH5014	SH6023WB	NFW1101
				Slave Cylinder w/o Bearing	K0047-05	34	8 7/8	1	23T	*	SH5014	SH6023	NFW1101
			84-83		K0047-04		8 7/8	1	23T	*	SH5014	SH6018	NFW1101
	153"	2.5	01	O.E. Self Adjusting Kit	K70154-04 ⅄◎		9	1	23T	SPM011	SH5184	SH6161WB	NFW1145
				Slave Cylinder w/o Bearing	K70154-04		9	1	23T	SPM011	SH5184	SH6161	NFW1145
			00-98	O.E. Self Adjusting Kit	K70154-04 ⅄◎		9	1	23T	SPM011	SH5184	SH6024WB	NFW1145
				Slave Cylinder w/o Bearing	K70154-04		9	1	23T	SPM011	SH5184	SH6024	NFW1145
6	171"	2.8	85		K0047-05 ⅄	34	8 7/8	1	23T	*	SH5014	SH6023WB	*
				Slave Cylinder w/o Bearing	K0047-05	34	8 7/8	1	23T	*	SH5014	SH6023	*
			84-83		K0047-04		8 7/8	1	23T	*	SH5014	SH6029	*
	177"	2.9	92		K0047-06 ⅄		8 7/8	1	23T	SPM004	SH5064	SH6001WB	NFW1109
				Slave Cylinder w/o Bearing	K0047-06		8 7/8	1	23T	SPM004	SH5064	SH6001	NFW1109
			91-88		K0047-06 ⅄		8 7/8	1	23T	SPM001	SH5060	SH6001WB	NFW1109
				Slave Cylinder w/o Bearing	K0047-06		8 7/8	1	23T	SPM001	SH5060	SH6001	NFW1109
			87-86		K0047-05 ⅄	34	8 7/8	1	23T	*	SH5014	SH6023WB	NFW1109
				Slave Cylinder w/o Bearing	K0047-05	34	8 7/8	1	23T	*	SH5014	SH6023	NFW1109
	182"	3.0	08-01	O.E. Self Adjusting Kit	K70154-04 ⅄◎		9	1	23T	SPM012	SH5184	SH6161WB	NFW1152
				Slave Cylinder w/o Bearing	K70154-04		9	1	23T	SPM012	SH5184	SH6161	NFW1152
			00-98	O.E. Self Adjusting Kit	K70154-04 ⅄◎		9	1	23T	SPM010	SH5184	SH6024WB	NFW1152
				Slave Cylinder w/o Bearing	K70154-04		9	1	23T	SPM010	SH5184	SH6024	NFW1152
			97-95	O.E. Self Adjusting Kit	K70154-04 ⅄◎	44	9	1	23T	SPM008	SH5139	SH6024WB	NFW1152
				Slave Cylinder w/o Bearing	K70154-04	44	9	1	23T	SPM008	SH5139	SH6024	NFW1152

⅄ Slave cylinder includes bearing (not Included in Clutch Kit)
◎ Kit Only

* Not Available
Ø Components Available
Š Kit Includes Concentric Slave Cylinder
ƒ Kit Includes Flywheel

© 2014 ZF North American Operations, Inc. All Rights Reserved. No portion of this work may be reproduced or copied by any means without the prior approval of ZF North American Operations, Inc.

SACHS

CLUTCH KIT

Cyl.	CC Cubic Inch	Liter	Year	Application Information	Clutch Kit	Notes Pg.180	Disc Size O.D.	Disc Size I.D.	Disc Size Teeth	PreFilled Master Or System	Master Cylinder	Slave Cylinder	Flywheel
FORD LIGHT TRUCK (Cont'd)													
RANGER (Cont'd)													
6	182"	3.0	94-93		K0047-07 ⅄	44	8 7/8	1	23T	SPM006	SH5063	SH6024WB	NFW1115
				Slave Cylinder w/o Bearing	K0047-07	44	8 7/8	1	23T	SPM006	SH5063	SH6024	NFW1115
			92		K0047-06 ⅄		8 7/8	1	23T	*	SH5064	SH6001WB	NFW1115
			91		K0047-06 ⅄		8 7/8	1	23T	SPM003	SH5060	SH6001WB	NFW1115
	245"	4.0	11-01		K70313-01 ⅄		10 1/8	1	23T	SPM012	SH5184	SH6161WB	NFW1182
				Slave Cylinder w/o Bearing	K70313-01		10 1/8	1	23T	SPM012	SH5184	SH6161	NFW1182
			00		K70251-03 ⅄		10 1/8	1	23T	SPM010	SH5184	SH6161WB	NFW5318
				Slave Cylinder w/o Bearing	K70251-03		10 1/8	1	23T	SPM010	SH5184	SH6161	NFW5318
			99-98		K70251-01 ⅄		10 1/8	1	23T	SPM010	SH5184	SH6024WB	NFW5318
				Slave Cylinder w/o Bearing	K70251-01		10 1/8	1	23T	SPM010	SH5184	SH6024	NFW5318
			97	Flywheel w/ 6 Hole Bolt Pattern	K0116-02 ⅄	44	10	1	23T	SPM008	SH5139	SH6024WB	NFW1118
				Slave Cylinder w/o Bearing	K0116-02	44	10	1	23T	SPM008	SH5139	SH6024	NFW1118
				Flywheel w/ 8 Hole Bolt Pattern	K0116-02 ⅄	44	10	1	23T	SPM008	SH5139	SH6024WB	NFW5318
				Slave Cylinder w/o Bearing	K0116-02	44	10	1	23T	SPM008	SH5139	SH6024	NFW5318
			96-95		K0116-02 ⅄	44	10	1	23T	SPM008	SH5139	SH6024WB	NFW1118
				Slave Cylinder w/o Bearing	K0116-02	44	10	1	23T	SPM008	SH5139	SH6024	NFW1118
			94-93		K0116-02 ⅄	44	10	1	23T	SPM006	SH5063	SH6024WB	NFW1118
				Slave Cylinder w/o Bearing	K0116-02	44	10	1	23T	SPM006	SH5063	SH6024	NFW1118
			92		K0116-01 ⅄		10	1	23T	*	SH5064	SH6001WB	NFW1118
				Slave Cylinder w/o Bearing	K0116-01		10	1	23T	*	SH5064	SH6001	NFW1118
			91-90		K0116-01 ⅄		10	1	23T	SPM003	SH5060	SH6001WB	NFW1118
				Slave Cylinder w/o Bearing	K0116-01		10	1	23T	SPM003	SH5060	SH6001	NFW1118
FORD MEDIUM TRUCK													
F400-800 SERIES													
4	220"	3.6	63-62	Diesel	K0162-03	2	11	1 3/8	10T	*	*	*	*
6	223"	3.6	76-55		K0162-03	2	11	1 3/8	10T	*	*	*	*
	240"	3.9	76-55		K0162-01	2	11	1 3/8	10T	*	*	*	*
	300"	4.9	76-66		K0386-02	2	13	1 3/8	10T	*	*	*	*
				Optional Kit/CB Disc	K0386-02CB	2	13	1 3/8	10T	*	*	*	*
				Optional Kit/Kevlar® Disc	K0386-02KL	2	13	1 3/8	10T	*	*	*	*
				Optional Kit/Diaph. Cover	K1919-03		13	1 3/8	10T	*	*	*	*
				Optional Kit/Diaph. w/ CB Disc	K1919-03CB		13	1 3/8	10T	*	*	*	*
	359"	5.9	99-93	FD1060 eng.	K70323-01 ◎		14	1 3/4	10T	*	*	*	*
	504"	8.3	98-92	FD1460 eng.	K70323-01 ◎		14	1 3/4	10T	*	*	*	*
	ALL	ALL	54-41	1 1/2-2 Ton	K0162-01	2	11	1 3/8	10T	*	*	*	*
8	292"	4.8	64-55		K0162-02	2	11	1 3/8	10T	*	*	*	*
	330"	5.4	86-55	13" Clutch	K0386-02	2	13	1 3/8	10T	*	*	*	*
				Optional Kit/CB Disc	K0386-02CB	2	13	1 3/8	10T	*	*	*	*
				Optional Kit/Kevlar® Disc	K0386-02KL	2	13	1 3/8	10T	*	*	*	*
				Optional Kit/Diaph. Cover	K1919-03		13	1 3/8	10T	*	*	*	*
				Optional Kit/Diaph. w/ CB Disc	K1919-03CB		13	1 3/8	10T	*	*	*	*
			64-55	11" Clutch	K0162-02	2	11	1 3/8	10T	*	*	*	*
	361"	5.9	86-55		K0386-02	2	13	1 3/8	10T	*	*	*	*
				Optional Kit/CB Disc	K0386-02CB	2	13	1 3/8	10T	*	*	*	*
				Optional Kit/Kevlar® Disc	K0386-02KL	2	13	1 3/8	10T	*	*	*	*
				Optional Kit/Diaph. Cover	K1919-03		13	1 3/8	10T	*	*	*	*

⅄ Slave cylinder includes bearing (not Included in Clutch Kit)
◎ Kit Only

* Not Available
Ø Components Available
Š Kit Includes Concentric Slave Cylinder
ƒ Kit Includes Flywheel

© 2014 ZF North American Operations, Inc. All Rights Reserved. No portion of this work may be reproduced or copied by any means without the prior approval of ZF North American Operations, Inc.

CLUTCH KIT

Cyl.	CC Cubic Inch	Liter	Year	Application Information	Clutch Kit	Notes Pg.180	Disc Size O.D.	Disc Size I.D.	Disc Size Teeth	PreFilled Master Or System	Master Cylinder	Slave Cylinder	Flywheel
FORD MEDIUM TRUCK (Cont'd)													
F400-800 SERIES (Cont'd)													
8	361"	5.9	86-55	Optional Kit/Diaph. w/ CB Disc	K1919-03CB		13	1 3/8	10T	*	*	*	*
	363"	6.0	07-03	F450 SD, F550 SD, Kit for Solid Flywheel	K70432-01 ♉		13	1 3/8	10T	SPH064	SH5486	SH6417	NFW1190
			82-79		K0386-02	2	13	1 3/8	10T	*	*	*	*
				Optional Kit/CB Disc	K0386-02CB	2	13	1 3/8	10T	*	*	*	*
				Optional Kit/Kevlar® Disc	K0386-02KL	2	13	1 3/8	10T	*	*	*	*
				Optional Kit/Diaph. Cover	K1919-03		13	1 3/8	10T	*	*	*	*
				Optional Kit/Diaph. w/ CB Disc	K1919-03CB		13	1 3/8	10T	*	*	*	*
	370"	6.1	91-79	Gas	K0386-02	2	13	1 3/8	10T	*	*	*	*
				Optional Kit/CB Disc	K0386-02CB	2	13	1 3/8	10T	*	*	*	*
				Optional Kit/Kevlar® Disc	K0386-02KL	2	13	1 3/8	10T	*	*	*	*
				Optional Kit/Diaph. Cover	K1919-03		13	1 3/8	10T	*	*	*	*
				Optional Kit/Diaph. w/ CB Disc	K1919-03CB		13	1 3/8	10T	*	*	*	*
	390"	6.4	77-64		K0386-02	2	13	1 3/8	10T	*	*	*	*
				Optional Kit/CB Disc	K0386-02CB	2	13	1 3/8	10T	*	*	*	*
				Optional Kit/Kevlar® Disc	K0386-02KL	2	13	1 3/8	10T	*	*	*	*
				Optional Kit/Diaph. Cover	K1919-03		13	1 3/8	10T	*	*	*	*
				Optional Kit/Diaph. w/ CB Disc	K1919-03CB		13	1 3/8	10T	*	*	*	*
	391"	6.4	10-08	F450 SD, F550 SD	K70432-01		13	1 3/8	10T	SPH069	*	*	*
	429"	7.0	98-93	Single Plate	K0511-01 ◎		12 3/4	1 1/2	10T	*	*	*	*
			93-79		K0386-02	2	13	1 3/8	10T	*	*	*	*
				Optional Kit/CB Disc	K0386-02CB	2	13	1 3/8	10T	*	*	*	*
				Optional Kit/Kevlar® Disc	K0386-02KL	2	13	1 3/8	10T	*	*	*	*
				Optional Kit/Diaph. Cover	K1919-03		13	1 3/8	10T	*	*	*	*
				Optional Kit/Diaph. w/ CB Disc	K1919-03CB		13	1 3/8	10T	*	*	*	*
	445"	7.3	03-99	F450 SD, F550 SD	K70241-01	72	13	1 3/8	10T	SPH032	SH5193	SH6156	NFW1171
				Optional Kit/HD Disc	K70241-01HD	72,79	13	1 3/8	10T	SPH032	SH5193	SH6156	NFW1171
				Optional Kit/CB Disc	K70241-01CB	72,79	13	1 3/8	10T	SPH032	SH5193	SH6156	NFW1171
				Optional Kit/Kevlar® Disc	K70241-01KL	72	13	1 3/8	10T	SPH032	SH5193	SH6156	NFW1171
	471"	7.7	84-63		K0386-02	2	13	1 3/8	10T	*	*	*	*
				Optional Kit/CB Disc	K0386-02CB	2	13	1 3/8	10T	*	*	*	*
				Optional Kit/Kevlar® Disc	K0386-02KL	2	13	1 3/8	10T	*	*	*	*
				Optional Kit/Diaph. Cover	K1919-03		13	1 3/8	10T	*	*	*	*
				Optional Kit/Diaph. w/ CB Disc	K1919-03CB		13	1 3/8	10T	*	*	*	*
	ALL	ALL	54-35	1 1/2-2 Ton	K0162-01	2	11	1 3/8	10T	*	*	*	*
10	415"	6.8	10-09	F550 SD	K70431-01		12	1 1/4	10T	SPH068	*	*	*
				F550 SD, Non-Self Adjusting Kit	K70631-01		12	1 1/4	10T	SPH068	*	*	*
			08-07	(fr. 12/06) F450 SD, F550 SD, Non-Self Adjusting Kit	K70631-01		12	1 1/4	10T	SPH068	*	*	*
				(fr. 12/06) F450 SD, F550 SD, O.E. Self Adjusting Kit	K70431-01		12	1 1/4	10T	SPH068	*	*	*
			07-99	(to 12/06) F450 SD, F550 SD, Non-Self Adjusting Kit	K70631-01		12	1 1/4	10T	SPH007	SH5486	SH6157	*
				(to 12/06) F450 SD, F550 SD, O.E. Self Adjusting Kit	K70431-01		12	1 1/4	10T	SPH007	SH5486	SH6157	*

◎ Kit Only
♉ Flywheel does not come with bolts

* Not Available
Ø Components Available
Š Kit Includes Concentric Slave Cylinder
ƒ Kit Includes Flywheel

© 2014 ZF North American Operations, Inc. All Rights Reserved. No portion of this work may be reproduced or copied by any means without the prior approval of ZF North American Operations, Inc.

SACHS

CLUTCH KIT

Cyl.	CC Cubic Inch	Liter	Year	Application Information	Clutch Kit	Notes Pg.180	Disc Size O.D.	Disc Size I.D.	Disc Size Teeth	PreFilled Master Or System	Master Cylinder	Slave Cylinder	Flywheel
GEO													
METRO													
3	61"	1.0	97-89		K0108-02		6 3/4	3/4	18T	*	*	*	NFW3302
4	79"	1.3	97-92		K0077-01		7 1/2	3/4	18T	*	*	*	*
PRIZM													
4	98"	1.6	97-93		K70079-03		8 3/8	15/16	21T	*	SH5204	SH6037	NFW6931
			92-90	8th Digit of VIN # 5	K70079-03		8 3/8	15/16	21T	*	SH5204	SH6037	NFW6926
			92-89	8th Digit of VIN # 6	K0076-01		7 7/8	15/16	21T	*	*	SH6037	NFW6926
	110"	1.8	97-93		K70079-03		8 3/8	15/16	21T	*	SH5204	SH6037	NFW6931
SPECTRUM													
4	90"	1.5	89	Turbo	K0074-01 ◎	27	8 1/2	1	14T	*	*	*	*
				Non-Turbo	K0044-01	27	7 1/4	1	14T	*	*	*	NFW1021
STORM													
4	97"	1.6	93-90		K0110-01	27	7 7/8	1	14T	*	*	*	*
	109"	1.8	93-92		K70047-01	27	8 7/8	1	14T	*	*	*	*
TRACKER													
4	98"	1.6	97-95		K0107-03		8 1/2	7/8	20T	*	*	*	NFW6801
			94-89		K1117-01		7 7/8	7/8	20T	*	*	*	NFW6801
GMC LIGHT TRUCK													
C, K, R, V, 15, 25, 35 SERIES, FULL SIZE JIMMY, SIERRA, SUBURBAN, TRUCK													
4	153"	2.5	63		K1874-06	28	10	1 1/8	10T	*	*	*	NFW1008
6	230"	3.8	69-63	10" Clutch	K1874-06	28	10	1 1/8	10T	*	*	*	NFW1008
				11" Clutch	K5473-01	28	11	1 1/8	10T	*	*	*	NFW1007
				12" Clutch	K1862-01	2,28	12	1 1/8	10T	*	*	*	NFW1007
				Optional Kit/Diaph. Cover	K1909-02	28	12	1 1/8	10T	*	*	*	NFW1007
				Optional Kit/Diaph. w/ HD Disc	K1909-02HD	28	12	1 1/8	10T	*	*	*	NFW1007
				Optional Kit/Diaph. w/ CB Disc	K1909-02CB	28	12	1 1/8	10T	*	*	*	NFW1007
				Optional Kit/Diaph. w/ Kevlar® Disc	K1909-02KL	28	12	1 1/8	10T	*	*	*	NFW1007
	250"	4.1	84-77	11" Clutch	K1877-02	28	11	1 1/8	10T	*	*	*	NFW1007
				Optional Power Clutch Kit	PC1877-02	28	11	1 1/8	10T	*	*	*	NFW1007
				12" Clutch	K1862-01	2,28	12	1 1/8	10T	*	*	*	NFW1007
				Optional Kit/Diaph. Cover	K1909-02	28	12	1 1/8	10T	*	*	*	NFW1007
				Optional Kit/Diaph. w/ HD Disc	K1909-02HD	28	12	1 1/8	10T	*	*	*	NFW1007
				Optional Kit/Diaph. w/ CB Disc	K1909-02CB	28	12	1 1/8	10T	*	*	*	NFW1007
				Optional Kit/Diaph. w/ Kevlar® Disc	K1909-02KL	28	12	1 1/8	10T	*	*	*	NFW1007
			76-66	10" Clutch	K1874-06	28	10	1 1/8	10T	*	*	*	NFW1017
				11" Clutch	K5473-01	28	11	1 1/8	10T	*	*	*	NFW1007
	262"	4.3	07-03	Sierra 1500, Kit w/ 47.5mm I.D.	K70285-02 ⚲		12	1 1/8	10T	*	SH5192	SH6443WB	NFW1055
				Release Bearing									
				Slave Cylinder w/o Bearing	K70285-02		12	1 1/8	10T	*	SH5192	SH6443	NFW1055
			02-01	Sierra 1500, Kit w/ 47.5mm I.D.	K70285-02 ⚲		12	1 1/8	10T	*	SH5192	SH6163WB	NFW1055
				Release Bearing									
				Slave Cylinder w/o Bearing	K70285-02		12	1 1/8	10T	*	SH5192	SH6163	NFW1055
			00-99	Sierra 1500, Kit w/ 36.11mm I.D.	K70285-01 ⚲		12	1 1/8	10T	*	SH5192	SH6133WB	NFW1055
				Release Bearing									
				Slave Cylinder w/o Bearing	K70285-01		12	1 1/8	10T	*	SH5192	SH6133	NFW1055

⚲ Slave cylinder includes bearing (not Included in Clutch Kit)
◎ Kit Only

* Not Available
Ø Components Available
Š Kit Includes Concentric Slave Cylinder
ƒ Kit Includes Flywheel

© 2014 ZF North American Operations, Inc. All Rights Reserved. No portion of this work may be reproduced or copied by any means without the prior approval of ZF North American Operations, Inc.

CLUTCH KIT

Cyl.	CC Cubic Inch	Liter	Year	Application Information	Clutch Kit	Notes Pg.180	Disc Size O.D.	Disc Size I.D.	Disc Size Teeth	PreFilled Master Or System	Master Cylinder	Slave Cylinder	Flywheel
GMC LIGHT TRUCK (Cont'd)													
C, K, R, V, 15, 25, 35 SERIES, FULL SIZE JIMMY, SIERRA, SUBURBAN, TRUCK (Cont'd)													
6	262"	4.3	98-96		K70169-01 ⅄	9	11	1 1/8	10T	*	SH5192	SH6133WB	NFW1046
				Slave Cylinder w/o Bearing	K70169-01	9	11	1 1/8	10T	*	SH5192	SH6133	NFW1046
				Optional Kit/Non-Predamp Disc	K70169-02		11	1 1/8	10T	*	SH5192	SH6133	NFW1046
			95	Cast #14103282	K70375-01	1,9,28,32	11	1 1/8	10T	SPH044	SH5179	SH6092	NFW1046
				Optional Kit/HD Disc	K70375-01HD	1,28,32	11	1 1/8	10T	SPH044	SH5179	SH6092	NFW1046
				Cast #10218653	K70375-01	1,9,28,32	11	1 1/8	10T	SPH044	SH5179	SH6092	NFW1031
				Optional Kit/HD Disc	K70375-01HD	1,28,32	11	1 1/8	10T	SPH044	SH5179	SH6092	NFW1031
			94-91	(fr. 2/91)	K70375-01	1,9,28,32	11	1 1/8	10T	SPH044	SH5179	SH6092	NFW1031
				Optional Kit/HD Disc	K70375-01HD	1,28,32	11	1 1/8	10T	SPH044	SH5179	SH6092	NFW1031
			91-88	(to 1/91)	K1877-09	9,28	11	1 1/8	10T	*	SH5379	SH6028	NFW1021
				Optional Kit/Non-Cam Hub Disc	K1877-02	28	11	1 1/8	10T	*	SH5379	SH6028	NFW1021
				Optional Power Clutch Kit	PC1877-02	28	11	1 1/8	10T	*	SH5379	SH6028	NFW1021
			87-86		K1877-09	9,28	11	1 1/8	10T	*	SH5032	SH6089	NFW1023
				Optional Kit/Non-Cam Hub Disc	K1877-02	28	11	1 1/8	10T	*	SH5032	SH6089	NFW1023
				Optional Power Clutch Kit	PC1877-02	28	11	1 1/8	10T	*	SH5032	SH6089	NFW1023
			85		K1877-09	9,28	11	1 1/8	10T	*	SH5032	SH6089	NFW1007
				Optional Kit/Non-Cam Hub Disc	K1877-02	28	11	1 1/8	10T	*	SH5032	SH6089	NFW1007
				Optional Power Clutch Kit	PC1877-02	28	11	1 1/8	10T	*	SH5032	SH6089	NFW1007
	292"	4.8	88-85		K1877-09	9,28	11	1 1/8	10T	*	SH5032	SH6089	NFW1036
			84-69	11" Clutch	K1877-02	28	11	1 1/8	10T	*	*	*	NFW1036
				Optional Power Clutch Kit	PC1877-02	28	11	1 1/8	10T	*	*	*	NFW1036
				12" Clutch	K1862-01	2,28	12	1 1/8	10T	*	*	*	NFW1036
				Optional Kit/Diaph. Cover	K1909-02	28	12	1 1/8	10T	*	*	*	NFW1007
				Optional Kit/Diaph. w/ HD Disc	K1909-02HD	28	12	1 1/8	10T	*	*	*	NFW1007
				Optional Kit/Diaph. w/ CB Disc	K1909-02CB	28	12	1 1/8	10T	*	*	*	NFW1007
				Optional Kit/Diaph. w/ Kevlar® Disc	K1909-02KL	28	12	1 1/8	10T	*	*	*	NFW1007
			68-66		K5473-01	28	11	1 1/8	10T	*	*	*	NFW1007
8	283"	4.6	67	11" Clutch	K5473-01	28	11	1 1/8	10T	*	*	*	*
				12" Clutch	K1862-01	2,28	12	1 1/8	10T	*	*	*	*
				Optional Kit/Diaph. Cover	K1909-02	28	12	1 1/8	10T	*	*	*	*
				Optional Kit/Diaph. w/ HD Disc	K1909-02HD	28	12	1 1/8	10T	*	*	*	*
				Optional Kit/Diaph. w/ CB Disc	K1909-02CB	28	12	1 1/8	10T	*	*	*	*
				Optional Kit/Diaph. w/ Kevlar® Disc	K1909-02KL	28	12	1 1/8	10T	*	*	*	*
	294"	4.8	06-03		K70318-01 ⅄		12	1 1/8	10T	*	SH5192	SH6443WB	NFW1050
				Slave Cylinder w/o Bearing	K70318-01		12	1 1/8	10T	*	SH5192	SH6443	NFW1050
			02-01		K70318-01 ⅄		12	1 1/8	10T	*	SH5192	SH6163WB	NFW1050
				Slave Cylinder w/o Bearing	K70318-01		12	1 1/8	10T	*	SH5192	SH6163	NFW1050
			00-99		K70318-02 ⅄		12	1 1/8	10T	*	SH5192	SH6133WB	*
				Slave Cylinder w/o Bearing	K70318-02		12	1 1/8	10T	*	SH5192	SH6133	*
	305"	5.0	98-96		K70149-01 ⅄	9	11 3/4	1 1/8	10T	*	SH5170	SH6133WB	NFW1023
				Slave Cylinder w/o Bearing	K70149-01	9	11 3/4	1 1/8	10T	*	SH5170	SH6133	NFW1023
			95-91	(fr. 2/91)	K70375-01	1,9,28,32	11	1 1/8	10T	SPH044	SH5179	SH6092	NFW1023
				Optional Kit/HD Disc	K70375-01HD	1,28,32	11	1 1/8	10T	SPH044	SH5179	SH6092	NFW1023
			91-88	(to 1/91)	K1877-09	9,28	11	1 1/8	10T	*	SH5379	SH6028	NFW1023
				Optional Kit/Non-Cam Hub Disc	K1877-02	28	11	1 1/8	10T	*	SH5379	SH6028	NFW1023
				Optional Power Clutch Kit	PC1877-02	28	11	1 1/8	10T	*	SH5379	SH6028	NFW1023

⅄ Slave cylinder includes bearing (not Included in Clutch Kit)

* Not Available
Ø Components Available
Š Kit Includes Concentric Slave Cylinder
ƒ Kit Includes Flywheel

© 2014 ZF North American Operations, Inc. All Rights Reserved. No portion of this work may be reproduced or copied by any means without the prior approval of ZF North American Operations, Inc.

SACHS

CLUTCH KIT

Cyl.	CC Cubic Inch	Liter	Year	Application Information	Clutch Kit	Notes Pg.180	Disc Size O.D.	Disc Size I.D.	Disc Size Teeth	PreFilled Master Or System	Master Cylinder	Slave Cylinder	Flywheel
GMC LIGHT TRUCK (Cont'd)													
C, K, R, V, 15, 25, 35 SERIES, FULL SIZE JIMMY, SIERRA, SUBURBAN, TRUCK (Cont'd)													
8	305"	5.0	87-86		K1877-09	9,28	11	1 1/8	10T	*	SH5032	SH6089	NFW1023
				Optional Kit/Non-Cam Hub Disc	K1877-02	28	11	1 1/8	10T	*	SH5032	SH6089	NFW1023
				Optional Power Clutch Kit	PC1877-02	28	11	1 1/8	10T	*	SH5032	SH6089	NFW1023
			85-76	11" Clutch	K1877-02	28	11	1 1/8	10T	*	*	*	NFW1007
				Optional Power Clutch Kit	PC1877-02	28	11	1 1/8	10T	*	*	*	NFW1007
				12" Clutch	K1862-01	2,28	12	1 1/8	10T	*	*	*	NFW1007
				Optional Kit/Diaph. Cover	K1909-02	28	12	1 1/8	10T	*	*	*	NFW1007
				Optional Kit/Diaph. w/ HD Disc	K1909-02HD	28	12	1 1/8	10T	*	*	*	NFW1007
				Optional Kit/Diaph. w/ CB Disc	K1909-02CB	28	12	1 1/8	10T	*	*	*	NFW1007
				Optional Kit/Diaph. w/ Kevlar® Disc	K1909-02KL	28	12	1 1/8	10T	*	*	*	NFW1007
	327"	5.3	68-67		K1862-01	2,28	12	1 1/8	10T	*	*	*	NFW1007
				Optional Kit/Diaph. Cover	K1909-02	28	12	1 1/8	10T	*	*	*	NFW1007
				Optional Kit/Diaph. w/ HD Disc	K1909-02HD	28	12	1 1/8	10T	*	*	*	NFW1007
				Optional Kit/Diaph. w/ CB Disc	K1909-02CB	28	12	1 1/8	10T	*	*	*	NFW1007
				Optional Kit/Diaph. w/ Kevlar® Disc	K1909-02KL	28	12	1 1/8	10T	*	*	*	NFW1007
	347"	5.7	57	12" Clutch	K1862-01	2,28	12	1 1/8	10T	*	*	*	*
				Optional Kit/Diaph. Cover	K1909-02	28	12	1 1/8	10T	*	*	*	*
				Optional Kit/Diaph. w/ HD Disc	K1909-02HD	28	12	1 1/8	10T	*	*	*	*
				Optional Kit/Diaph. w/ CB Disc	K1909-02CB	28	12	1 1/8	10T	*	*	*	*
				Optional Kit/Diaph. w/ Kevlar® Disc	K1909-02KL	28	12	1 1/8	10T	*	*	*	*
	350"	5.7	00-99		K70149-01 ⅄	9	11 3/4	1 1/8	10T	*	SH5170	SH6133WB	NFW1044
				Slave Cylinder w/o Bearing	K70149-01	9	11 3/4	1 1/8	10T	*	SH5170	SH6133	NFW1044
			98-97	C/K 1500	K70149-01 ⅄	9	11 3/4	1 1/8	10T	*	SH5170	SH6133WB	NFW1023
				Slave Cylinder w/o Bearing	K70149-01	9	11 3/4	1 1/8	10T	*	SH5170	SH6133	NFW1023
				C/K 2500 w/ NV4500/MW3 trans.	K70149-01 ⅄	9	11 3/4	1 1/8	10T	*	SH5170	SH6133WB	NFW1044
				Slave Cylinder w/o Bearing	K70149-01	9	11 3/4	1 1/8	10T	*	SH5170	SH6133	NFW1044
				C/K 2500 w/ NV3500/M50 trans.	K70149-01 ⅄	9	11 3/4	1 1/8	10T	*	SH5170	SH6133WB	NFW1023
				Slave Cylinder w/o Bearing	K70149-01	9	11 3/4	1 1/8	10T	*	SH5170	SH6133	NFW1023
			98-96	C/K 3500	K70149-01 ⅄	9	11 3/4	1 1/8	10T	*	SH5170	SH6133WB	NFW1044
				Slave Cylinder w/o Bearing	K70149-01	9	11 3/4	1 1/8	10T	*	SH5170	SH6133	NFW1044
			96	C/K 1500 & 2500	K70149-01 ⅄	9	11 3/4	1 1/8	10T	*	SH5170	SH6133WB	NFW1023
				Slave Cylinder w/o Bearing	K70149-01	9	11 3/4	1 1/8	10T	*	SH5170	SH6133	NFW1023
			95-91	(fr. 2/91)	K1909-06	9,32	11 3/4	1 1/8	10T	SPH044	SH5179	SH6092	NFW1023
				Optional Kit/HD Disc	K1909-06HD	9,32	11 7/8	1 1/8	10T	SPH044	SH5179	SH6092	NFW1023
				Optional Kit/Non-Cam Hub Disc	K1909-02	32	12	1 1/8	10T	SPH044	SH5179	SH6092	NFW1023
				Optional Kit/Non-Cam Hub HD Disc	K1909-02HD	32	12	1 1/8	10T	SPH044	SH5179	SH6092	NFW1023
				Optional Kit/Non-Cam Hub CB Disc	K1909-02CB	32	12	1 1/8	10T	SPH044	SH5179	SH6092	NFW1023
				Optional Kit/Non-Cam Hub Kevlar® Disc	K1909-02KL	32	12	1 1/8	10T	SPH044	SH5179	SH6092	NFW1023
			91-88	(to 1/91)	K1909-02	28	12	1 1/8	10T	*	SH5379	SH6028	NFW1023
				Optional Kit/HD Disc	K1909-02HD	28	12	1 1/8	10T	*	SH5379	SH6028	NFW1023
				Optional Kit/CB Disc	K1909-02CB	28	12	1 1/8	10T	*	SH5379	SH6028	NFW1023
				Optional Kit/Kevlar® Disc	K1909-02KL	28	12	1 1/8	10T	*	SH5379	SH6028	NFW1023

⅄ Slave cylinder includes bearing (not Included in Clutch Kit)

* Not Available
Ø Components Available
Š Kit Includes Concentric Slave Cylinder
ƒ Kit Includes Flywheel

© 2014 ZF North American Operations, Inc. All Rights Reserved. No portion of this work may be reproduced or copied by any means without the prior approval of ZF North American Operations, Inc.

CLUTCH KIT

Cyl.	CC Cubic Inch	Liter	Year	Application Information	Clutch Kit	Notes Pg.180	Disc Size O.D.	Disc Size I.D.	Disc Size Teeth	PreFilled Master Or System	Master Cylinder	Slave Cylinder	Flywheel
GMC LIGHT TRUCK (Cont'd)													
C, K, R, V, 15, 25, 35 SERIES, FULL SIZE JIMMY, SIERRA, SUBURBAN, TRUCK (Cont'd)													
8	350"	5.7	87-86		K1909-02	28	12	1 1/8	10T	*	SH5032	SH6089	NFW1023
				Optional Kit/HD Disc	K1909-02HD	28	12	1 1/8	10T	*	SH5032	SH6089	NFW1023
				Optional Kit/CB Disc	K1909-02CB	28	12	1 1/8	10T	*	SH5032	SH6089	NFW1023
				Optional Kit/Kevlar® Disc	K1909-02KL	28	12	1 1/8	10T	*	SH5032	SH6089	NFW1023
			85-69	12" Clutch	K1862-01	2,28	12	1 1/8	10T	*	*	*	NFW1007
				Optional Kit/Diaph. Cover	K1909-02	28	12	1 1/8	10T	*	*	*	NFW1007
				Optional Kit/Diaph. w/ HD Disc	K1909-02HD	28	12	1 1/8	10T	*	*	*	NFW1007
				Optional Kit/Diaph. w/ CB Disc	K1909-02CB	28	12	1 1/8	10T	*	*	*	NFW1007
				Optional Kit/Diaph. w/ Kevlar® Disc	K1909-02KL	28	12	1 1/8	10T	*	*	*	NFW1007
	364"	6.0	07-03		K70333-01 ⅄		11 1/2	1 1/8	10T	*	SH5192	SH6443WB	NFW1050
				Slave Cylinder w/o Bearing	K70333-01		11 1/2	1 1/8	10T	*	SH5192	SH6443	NFW1050
			02-01		K70333-01 ⅄		11 1/2	1 1/8	10T	*	SH5192	SH6163WB	NFW1050
				Slave Cylinder w/o Bearing	K70333-01		11 1/2	1 1/8	10T	*	SH5192	SH6163	NFW1050
			00-99		K70333-02 ⅄		11 1/2	1 1/8	10T	*	SH5192	SH6133WB	*
				Slave Cylinder w/o Bearing	K70333-02		11 1/2	1 1/8	10T	*	SH5192	SH6133	*
	379"	6.2	93-92		K1909-06 ◘	9,28	11 3/4	1 1/8	10T	*	SH5539	SH6092	NFW1049
				Optional Kit/HD Disc	K1909-06HD ◘	9,28	11 7/8	1 1/8	10T	*	SH5539	SH6092	NFW1049
				Optional Kit/Non-Cam Hub Disc	K1909-02 ◘	28	12	1 1/8	10T	*	SH5539	SH6092	NFW1049
				Optional Kit/Non-Cam Hub HD Disc	K1909-02HD ◘	28	12	1 1/8	10T	*	SH5539	SH6092	NFW1049
				Optional Kit/Non-Cam Hub CB Disc	K1909-02CB ◘	28	12	1 1/8	10T	*	SH5539	SH6092	NFW1049
				Optional Kit/Non-Cam Hub Kevlar® Disc	K1909-02KL ◘	28	12	1 1/8	10T	*	SH5539	SH6092	NFW1049
			91-88	C/K Series	K1909-06 ◘	9,28	11 3/4	1 1/8	10T	*	SH5379	SH6028	NFW1049
				Optional Kit/HD Disc	K1909-06HD ◘	9,28	11 7/8	1 1/8	10T	*	SH5379	SH6028	NFW1049
				Optional Kit/Non-Cam Hub Disc	K1909-02 ◘	28	12	1 1/8	10T	*	SH5379	SH6028	NFW1049
				Optional Kit/Non-Cam Hub HD Disc	K1909-02HD ◘	28	12	1 1/8	10T	*	SH5379	SH6028	NFW1049
				Optional Kit/Non-Cam Hub CB Disc	K1909-02CB ◘	28	12	1 1/8	10T	*	SH5379	SH6028	NFW1049
				Optional Kit/Non-Cam Hub Kevlar® Disc	K1909-02KL ◘	28	12	1 1/8	10T	*	SH5379	SH6028	NFW1049
			91-87	R/V Series incl. Jimmy	K1909-06 ◘	9,28	11 3/4	1 1/8	10T	*	SH5032	SH6089	NFW1049
				Optional Kit/HD Disc	K1909-06HD ◘	9,28	11 7/8	1 1/8	10T	*	SH5032	SH6089	NFW1049
				Optional Kit/Non-Cam Hub Disc	K1909-02 ◘	28	12	1 1/8	10T	*	SH5032	SH6089	NFW1049
				Optional Kit/Non-Cam Hub HD Disc	K1909-02HD ◘	28	12	1 1/8	10T	*	SH5032	SH6089	NFW1049
				Optional Kit/Non-Cam Hub CB Disc	K1909-02CB ◘	28	12	1 1/8	10T	*	SH5032	SH6089	NFW1049
				Optional Kit/Non-Cam Hub Kevlar® Disc	K1909-02KL ◘	28	12	1 1/8	10T	*	SH5032	SH6089	NFW1049
			86-85		K1909-02 ◘	28	12	1 1/8	10T	*	SH5032	SH6089	NFW1049
				Optional Kit/HD Disc	K1909-02HD ◘	28	12	1 1/8	10T	*	SH5032	SH6089	NFW1049
				Optional Kit/CB Disc	K1909-02CB ◘	28	12	1 1/8	10T	*	SH5032	SH6089	NFW1049
				Optional Kit/Kevlar® Disc	K1909-02KL ◘	28	12	1 1/8	10T	*	SH5032	SH6089	NFW1049

⅄ Slave cylinder includes bearing (not Included in Clutch Kit)
◘ Flywheel Casting: # 14050525 uses Flywheel # NFW1049

* Not Available
Ø Components Available
Š Kit Includes Concentric Slave Cylinder
ƒ Kit Includes Flywheel

© 2014 ZF North American Operations, Inc. All Rights Reserved. No portion of this work may be reproduced or copied by any means without the prior approval of ZF North American Operations, Inc.

SACHS

CLUTCH KIT

Cyl.	CC Cubic Inch	Liter	Year	Application Information	Clutch Kit	Notes Pg.180	Disc Size O.D.	Disc Size I.D.	Disc Size Teeth	PreFilled Master Or System	Master Cylinder	Slave Cylinder	Flywheel
GMC LIGHT TRUCK (Cont'd)													
C, K, R, V, 15, 25, 35 SERIES, FULL SIZE JIMMY, SIERRA, SUBURBAN, TRUCK (Cont'd)													
8	379"	6.2	84	Jimmy	K1909-02 ◘	28	12	1 1/8	10T	*	SH5032	*	NFW1049
				Optional Kit/HD Disc	K1909-02HD ◘	28	12	1 1/8	10T	*	SH5032	*	NFW1049
				Optional Kit/CB Disc	K1909-02CB ◘	28	12	1 1/8	10T	*	SH5032	*	NFW1049
				Optional Kit/Kevlar® Disc	K1909-02KL ◘	28	12	1 1/8	10T	*	SH5032	*	NFW1049
			84-82	C/K Series	K1909-02 ◘	28	12	1 1/8	10T	*	*	*	NFW1049
				Optional Kit/HD Disc	K1909-02HD ◘	28	12	1 1/8	10T	*	*	*	NFW1049
				Optional Kit/CB Disc	K1909-02CB ◘	28	12	1 1/8	10T	*	*	*	NFW1049
				Optional Kit/Kevlar® Disc	K1909-02KL ◘	28	12	1 1/8	10T	*	*	*	NFW1049
	395"	6.5	02-96	Kit for DMF	K70147-01		11 7/8	1 1/8	10T	*	SH5170	SH6133	*
				Kit for Solid Flywheel	K70187-02 ⅄		11 7/8	1 1/8	10T	*	SH5170	SH6133WB	NFW1043
				Slave Cylinder w/o Bearing	K70187-02		11 7/8	1 1/8	10T	*	SH5170	SH6133	NFW1043
				Optional Kit/HD Disc	K70187-02HD	79	11 7/8	1 1/8	10T	*	SH5170	SH6133	NFW1043
				Optional Kit/CB Disc	K70187-02CB	79	11 7/8	1 1/8	10T	*	SH5170	SH6133	NFW1043
			95	Kit for DMF	K70054-01	28,32	12	1 1/8	10T	SPH044	SH5179	SH6092	*
				Optional Kit/HD Disc	K70054-01HD	28,32	12	1 1/8	10T	SPH044	SH5179	SH6092	*
				Kit for Solid Flywheel	K70188-01	28,32	12	1 1/8	10T	SPH044	SH5179	SH6092	NFW1043
				Optional Kit/HD Disc	K70188-01HD	28,32,79	12	1 1/8	10T	SPH044	SH5179	SH6092	NFW1043
				Optional Kit/CB Disc	K70188-01CB	28,32	12	1 1/8	10T	SPH044	SH5179	SH6092	NFW1043
			94-92	Kit for DMF	K70054-01	28,32	12	1 1/8	10T	SPH044	SH5539	SH6092	*
				Optional Kit/HD Disc	K70054-01HD	28,32	12	1 1/8	10T	SPH044	SH5539	SH6092	*
				Kit for Solid Flywheel	K70188-01	28,32	12	1 1/8	10T	SPH044	SH5539	SH6092	NFW1043
				Optional Kit/HD Disc	K70188-01HD	28,32,79	12	1 1/8	10T	SPH044	SH5539	SH6092	NFW1043
				Optional Kit/CB Disc	K70188-01CB	28,32	12	1 1/8	10T	SPH044	SH5539	SH6092	NFW1043
	400"	6.6	06-01	Kit for DMF	K70303-01 Š◎	60	12	1 3/8	10T	*	SH5496	SB60149	DMF91128
				Kit w/ Solid Flywheel	K70487-01F Š◎		11 7/8	1 3/8	10T	*	SH5496	SB60149	*
			80-78		K1877-04	28	11	1 1/8	26T	*	*	*	NFW1040
			77-76		K1877-04		11	1 1/8	26T	*	*	*	*
	402"	6.6	72-70	12" Clutch	K1862-01	2	12	1 1/8	10T	*	*	*	NFW1007
				Optional Kit/Diaph. Cover	K1909-02		12	1 1/8	10T	*	*	*	NFW1007
				Optional Kit/Diaph. w/ HD Disc	K1909-02HD		12	1 1/8	10T	*	*	*	NFW1007
				Optional Kit/Diaph. w/ CB Disc	K1909-02CB		12	1 1/8	10T	*	*	*	NFW1007
				Optional Kit/Diaph. w/ Kevlar® Disc	K1909-02KL		12	1 1/8	10T	*	*	*	NFW1007
	454"	7.4	00-97	C/K Series, Wide Lining	K70150-01 ⅄		11 7/8	1 1/8	10T	*	SH5192	SH6133WB	NFW7227
				Slave Cylinder w/o Bearing	K70150-01		11 7/8	1 1/8	10T	*	SH5192	SH6133	NFW7227
			96	C/K Series, Wide Lining	K70150-01 ⅄		11 7/8	1 1/8	10T	*	SH5170	SH6133WB	*
				Slave Cylinder w/o Bearing	K70150-01		11 7/8	1 1/8	10T	*	SH5170	SH6133	*
			95	C/K Series	K1909-06	9,32	11 3/4	1 1/8	10T	SPH044	SH5179	SH6092	NFW1051
				Optional Kit/HD Disc	K1909-06HD	9,32	11 7/8	1 1/8	10T	SPH044	SH5179	SH6092	NFW1051
				Optional Kit/Non-Cam Hub Disc	K1909-02	32	12	1 1/8	10T	SPH044	SH5179	SH6092	NFW1051
				Optional Kit/Non-Cam Hub HD Disc	K1909-02HD	32	12	1 1/8	10T	SPH044	SH5179	SH6092	NFW1051
				Optional Kit/Non-Cam Hub CB Disc	K1909-02CB	32	12	1 1/8	10T	SPH044	SH5179	SH6092	NFW1051
				Optional Kit/Non-Cam Hub Kevlar® Disc	K1909-02KL	32	12	1 1/8	10T	SPH044	SH5179	SH6092	NFW1051

⅄ Slave cylinder includes bearing (not Included in Clutch Kit)
◎ Kit Only
◘ Flywheel Casting: # 14050525 uses Flywheel # NFW1049

* Not Available
Ø Components Available
Š Kit Includes Concentric Slave Cylinder
ƒ Kit Includes Flywheel

© 2014 ZF North American Operations, Inc. All Rights Reserved. No portion of this work may be reproduced or copied by any means without the prior approval of ZF North American Operations, Inc.

CLUTCH KIT

Cyl.	CC Cubic Inch	Liter	Year	Application Information	Clutch Kit	Notes Pg.180	Disc Size O.D.	Disc Size I.D.	Disc Size Teeth	PreFilled Master Or System	Master Cylinder	Slave Cylinder	Flywheel
GMC LIGHT TRUCK (Cont'd)													
C, K, R, V, 15, 25, 35 SERIES, FULL SIZE JIMMY, SIERRA, SUBURBAN, TRUCK (Cont'd)													
8	454"	7.4	94-92	C/K Series	K1909-06	9,32	11 3/4	1 1/8	10T	SPH044	SH5539	SH6092	NFW1051
				Optional Kit/HD Disc	K1909-06HD	9,32	11 7/8	1 1/8	10T	SPH044	SH5539	SH6092	NFW1051
				Optional Kit/Non-Cam Hub Disc	K1909-02	32	12	1 1/8	10T	SPH044	SH5539	SH6092	NFW1051
				Optional Kit/Non-Cam Hub HD Disc	K1909-02HD	32	12	1 1/8	10T	SPH044	SH5539	SH6092	NFW1051
				Optional Kit/Non-Cam Hub CB Disc	K1909-02CB	32	12	1 1/8	10T	SPH044	SH5539	SH6092	NFW1051
				Optional Kit/Non-Cam Hub Kevlar® Disc	K1909-02KL	32	12	1 1/8	10T	SPH044	SH5539	SH6092	NFW1051
			91	C/K Series	K1909-06	9	11 3/4	1 1/8	10T	*	SH5379	SH6028	NFW1051
				Optional Kit/HD Disc	K1909-06HD	9	11 7/8	1 1/8	10T	*	SH5379	SH6028	NFW1051
				Optional Kit/Non-Cam Hub Disc	K1909-02		12	1 1/8	10T	*	SH5379	SH6028	NFW1051
				Optional Kit/Non-Cam Hub HD Disc	K1909-02HD		12	1 1/8	10T	*	SH5379	SH6028	NFW1051
				Optional Kit/Non-Cam Hub CB Disc	K1909-02CB		12	1 1/8	10T	*	SH5379	SH6028	NFW1051
				Optional Kit/Non-Cam Hub Kevlar® Disc	K1909-02KL		12	1 1/8	10T	*	SH5379	SH6028	NFW1051
			91-87	R/V Series	K1909-02		12	1 1/8	10T	*	SH5032	SH6089	NFW1041
				Optional Kit/HD Disc	K1909-02HD		12	1 1/8	10T	*	SH5032	SH6089	NFW1041
				Optional Kit/CB Disc	K1909-02CB		12	1 1/8	10T	*	SH5032	SH6089	NFW1041
				Optional Kit/Kevlar® Disc	K1909-02KL		12	1 1/8	10T	*	SH5032	SH6089	NFW1041
			90-88	C/K Series	K1909-02	28	12	1 1/8	10T	*	SH5379	SH6028	NFW1041
				Optional Kit/HD Disc	K1909-02HD	28	12	1 1/8	10T	*	SH5379	SH6028	NFW1041
				Optional Kit/CB Disc	K1909-02CB	28	12	1 1/8	10T	*	SH5379	SH6028	NFW1041
				Optional Kit/Kevlar® Disc	K1909-02KL	28	12	1 1/8	10T	*	SH5379	SH6028	NFW1041
			86-85	C/K Series	K1909-02	28	12	1 1/8	10T	*	SH5032	SH6089	NFW1041
				Optional Kit/HD Disc	K1909-02HD	28	12	1 1/8	10T	*	SH5032	SH6089	NFW1041
				Optional Kit/CB Disc	K1909-02CB	28	12	1 1/8	10T	*	SH5032	SH6089	NFW1041
				Optional Kit/Kevlar® Disc	K1909-02KL	28	12	1 1/8	10T	*	SH5032	SH6089	NFW1041
			84-79	12" Clutch	K1862-01	2,28	12	1 1/8	10T	*	SH5032	*	NFW1041
				Optional Kit/Diaph. Cover	K1909-02	28	12	1 1/8	10T	*	SH5032	*	NFW1041
				Optional Kit/Diaph. w/ HD Disc	K1909-02HD	28	12	1 1/8	10T	*	SH5032	*	NFW1041
				Optional Kit/Diaph. w/ CB Disc	K1909-02CB	28	12	1 1/8	10T	*	SH5032	*	NFW1041
				Optional Kit/Diaph. w/ Kevlar® Disc	K1909-02KL	28	12	1 1/8	10T	*	SH5032	*	NFW1041
			78-73	12" Clutch	K1862-01	2,28	12	1 1/8	10T	*	*	*	NFW1041
				Optional Kit/Diaph. Cover	K1909-02	28	12	1 1/8	10T	*	*	*	NFW1041
				Optional Kit/Diaph. w/ HD Disc	K1909-02HD	28	12	1 1/8	10T	*	*	*	NFW1041
				Optional Kit/Diaph. w/ CB Disc	K1909-02CB	28	12	1 1/8	10T	*	*	*	NFW1041
				Optional Kit/Diaph. w/ Kevlar® Disc	K1909-02KL	28	12	1 1/8	10T	*	*	*	NFW1041
	496"	8.1	06-04	Sierra 2500 HD, 3500	K70414-01 Š		11 1/2	1 3/8	10T	*	SH5496	SB60149	*
			03-01	Sierra 2500 HD, 3500 - 6 Spd.	K70302-01 Š		11 5/8	1 3/8	10T	*	SH5496	SB60149	*
			02-01	C3500 - 5 Spd.	K70372-01 ⚲		11 3/4	1 1/4	10T	*	SH5496	SH6344	*
				Slave Cylinder w/o Bearing	K70372-01		11 3/4	1 1/4	10T	*	SH5496	SH6162	*

⚲ Slave cylinder includes bearing (not Included in Clutch Kit)

* Not Available
Ø Components Available
Š Kit Includes Concentric Slave Cylinder
ƒ Kit Includes Flywheel

© 2014 ZF North American Operations, Inc. All Rights Reserved. No portion of this work may be reproduced or copied by any means without the prior approval of ZF North American Operations, Inc.

SACHS

CLUTCH KIT

Cyl.	CC Cubic Inch	Liter	Year	Application Information	Clutch Kit	Notes Pg.180	Disc Size O.D.	Disc Size I.D.	Disc Size Teeth	PreFilled Master Or System	Master Cylinder	Slave Cylinder	Flywheel
GMC LIGHT TRUCK (Cont'd)													
CABALLERO													
6	200"	3.3	79		K1675-10	28	10 1/2	1 1/8	10T	*	*	*	*
			78	10 1/2" Clutch	K1874-02	28	10 1/2	1 1/8	10T	*	*	*	*
				11" Clutch	K5473-01		11	1 1/8	10T	*	*	*	*
	229"	3.8	81		K1675-10	28	10 1/2	1 1/8	10T	*	*	*	*
	231"	3.8	80-78	10 1/2" Clutch	K1874-02	28	10 1/2	1 1/8	10T	*	*	*	*
				11" Clutch	K5473-01		11	1 1/8	10T	*	*	*	*
8	267"	4.4	81-79		K1675-10	28	10 1/2	1 1/8	10T	*	*	*	*
	305"	5.0	81-78	Replaces O.E. 10" Clutch	K1675-10	28	10 1/2	1 1/8	10T	*	*	*	*
	350"	5.7	79-78		K1675-10		10 1/2	1 1/8	10T	*	*	*	*
CANYON													
4	169"	2.8	06-04		K70464-01 Š		9 1/8	1 1/8	26T	*	SH5304	SB60193	*
	178"	2.9	11-07		K70464-01 Š		9 1/8	1 1/8	26T	*	SH5304	SB60193	*
5	211"	3.5	06-04		K70394-01 Š		10 3/8	1 1/8	26T	*	SH5304	SB60193	*
				Slave Cylinder w/o Bearing	K70394-01		10 3/8	1 1/8	26T	*	SH5304	SH6133	*
	223"	3.7	07		K70394-01 Š		10 3/8	1 1/8	26T	*	SH5304	SB60193	*
				Slave Cylinder w/o Bearing	K70394-01		10 3/8	1 1/8	26T	*	SH5304	SH6133	*
G, P SERIES													
4	153"	2.5	65-63		K1874-06	28	10	1 1/8	10T	*	*	*	NFW1008
6	194"	3.2	66	10" Clutch	K1874-06	28	10	1 1/8	10T	*	*	*	NFW1017
				11" Clutch	K5473-01	28	11	1 1/8	10T	*	*	*	NFW1007
			66-63	10" Clutch	K1874-06	28	10	1 1/8	10T	*	*	*	NFW1017
	230"	3.8	69-63	10" Clutch	K1874-06	28	10	1 1/8	10T	*	*	*	NFW1017
				11" Clutch	K5473-01	28	11	1 1/8	10T	*	*	*	NFW1007
	250"	4.1	84-77	11" Clutch	K1877-02	28	11	1 1/8	10T	*	*	*	NFW1007
				Optional Power Clutch Kit	PC1877-02	28	11	1 1/8	10T	*	*	*	NFW1007
				12" Clutch	K1862-01	2,28	12	1 1/8	10T	*	*	*	NFW1007
				Optional Kit/Diaph. Cover	K1909-02	28	12	1 1/8	10T	*	*	*	NFW1007
				Optional Kit/Diaph. w/ HD Disc	K1909-02HD	28	12	1 1/8	10T	*	*	*	NFW1007
				Optional Kit/Diaph. w/ CB Disc	K1909-02CB	28	12	1 1/8	10T	*	*	*	NFW1007
				Optional Kit/Diaph. w/ Kevlar® Disc	K1909-02KL	28	12	1 1/8	10T	*	*	*	NFW1007
			76-66	10" Clutch	K1874-06	28	10	1 1/8	10T	*	*	*	NFW1017
				11" Clutch	K5473-01	28	11	1 1/8	10T	*	*	*	NFW1007
	262"	4.3	95	P Series, Cast # 10218655	K1877-09	1,9,28	11	1 1/8	10T	SPM014	SH5407	SH6092	NFW1031
				Optional Kit/Non-Cam Hub Disc	K1877-02	1,28	11	1 1/8	10T	SPM014	SH5407	SH6092	NFW1031
				Optional Power Clutch Kit	PC1877-02	1,28	11	1 1/8	10T	SPM014	SH5407	SH6092	NFW1031
				P Series, Cast # 14103283	K1877-09	1,9,28	11	1 1/8	10T	SPM014	SH5407	SH6092	NFW1046
				Optional Kit/Non-Cam Hub Disc	K1877-02	1,28	11	1 1/8	10T	SPM014	SH5407	SH6092	NFW1046
				Optional Power Clutch Kit	PC1877-02	1,28	11	1 1/8	10T	SPM014	SH5407	SH6092	NFW1046
			94-92	P Series	K1877-09	1,9,28	11	1 1/8	10T	*	SH5407	SH6092	NFW1046
				Optional Kit/Non-Cam Hub Disc	K1877-02	1,28	11	1 1/8	10T	*	SH5407	SH6092	NFW1046
				Optional Power Clutch Kit	PC1877-02	1,28	11	1 1/8	10T	*	SH5407	SH6092	NFW1046
			91	P Series	K1877-09	9,28	11	1 1/8	10T	*	SH5003	SH6413	NFW1046
				Optional Kit/Non-Cam Hub Disc	K1877-02	28	11	1 1/8	10T	*	SH5003	SH6413	NFW1046
				Optional Power Clutch Kit	PC1877-02	28	11	1 1/8	10T	*	SH5003	SH6413	NFW1046
			90	P Series	K1877-09	9,28	11	1 1/8	10T	*	*	*	NFW1046
				Optional Kit/Non-Cam Hub Disc	K1877-02	28	11	1 1/8	10T	*	*	*	NFW1046

* Not Available
Ø Components Available
Š Kit Includes Concentric Slave Cylinder
ƒ Kit Includes Flywheel

© 2014 ZF North American Operations, Inc. All Rights Reserved. No portion of this work may be reproduced or copied by any means without the prior approval of ZF North American Operations, Inc.

CLUTCH KIT

Cyl.	CC Cubic Inch	Liter	Year	Application Information	Clutch Kit	Notes Pg.180	Disc Size O.D.	Disc Size I.D.	Disc Size Teeth	PreFilled Master Or System	Master Cylinder	Slave Cylinder	Flywheel
GMC LIGHT TRUCK (Cont'd)													
G, P SERIES (Cont'd)													
6	262"	4.3	90	Optional Power Clutch Kit	PC1877-02	28	11	1 1/8	10T	*	*	*	NFW1046
			90-88	G Series	K1877-09	9,28	11	1 1/8	10T	*	SH5020	SH6028	NFW1023
				Optional Kit/Non-Cam Hub Disc	K1877-02	28	11	1 1/8	10T	*	SH5020	SH6028	NFW1023
				Optional Power Clutch Kit	PC1877-02	28	11	1 1/8	10T	*	SH5020	SH6028	NFW1023
			87-85	G Series	K1877-09	9,28	11	1 1/8	10T	*	*	*	NFW1023
				Optional Kit/Non-Cam Hub Disc	K1877-02	28	11	1 1/8	10T	*	*	*	NFW1023
				Optional Power Clutch Kit	PC1877-02	28	11	1 1/8	10T	*	*	*	NFW1023
	292"	4.8	89-85	P Series	K1877-09	9,28	11	1 1/8	10T	*	*	*	NFW1036
			84-75	11" Clutch	K1877-02	28	11	1 1/8	10T	*	*	*	NFW1036
				Optional Power Clutch Kit	PC1877-02	28	11	1 1/8	10T	*	*	*	NFW1036
				12" Clutch	K1862-01	2,28	12	1 1/8	10T	*	*	*	NFW1036
				Optional Kit/Diaph. Cover	K1909-02	28	12	1 1/8	10T	*	*	*	NFW1007
				Optional Kit/Diaph. w/ HD Disc	K1909-02HD	28	12	1 1/8	10T	*	*	*	NFW1007
				Optional Kit/Diaph. w/ CB Disc	K1909-02CB	28	12	1 1/8	10T	*	*	*	NFW1007
				Optional Kit/Diaph. w/ Kevlar® Disc	K1909-02KL	28	12	1 1/8	10T	*	*	*	NFW1007
			68-67	P Series	K5473-01	28	11	1 1/8	10T	*	*	*	NFW1007
8	305"	5.0	90-88	G Series	K1877-09	9,28	11	1 1/8	10T	*	*	*	NFW1023
				Optional Kit/Non-Cam Hub Disc	K1877-02	28	11	1 1/8	10T	*	*	*	NFW1023
				Optional Power Clutch Kit	PC1877-02	28	11	1 1/8	10T	*	*	*	NFW1023
			87-86	G Series	K1877-09	9,28	11	1 1/8	10T	*	*	*	NFW1023
				Optional Kit/Non-Cam Hub Disc	K1877-02	28	11	1 1/8	10T	*	*	*	NFW1023
				Optional Power Clutch Kit	PC1877-02	28	11	1 1/8	10T	*	*	*	NFW1023
			85-77	12" Clutch	K1862-01	2,28	12	1 1/8	10T	*	*	*	NFW1007
				Optional Kit/Diaph. Cover	K1909-02	28	12	1 1/8	10T	*	*	*	NFW1007
				Optional Kit/Diaph. w/ HD Disc	K1909-02HD	28	12	1 1/8	10T	*	*	*	NFW1007
				Optional Kit/Diaph. w/ CB Disc	K1909-02CB	28	12	1 1/8	10T	*	*	*	NFW1007
				Optional Kit/Diaph. w/ Kevlar® Disc	K1909-02KL	28	12	1 1/8	10T	*	*	*	NFW1007
				11" Clutch	K1877-02	28	11	1 1/8	10T	*	*	*	NFW1007
				Optional Power Clutch Kit	PC1877-02	28	11	1 1/8	10T	*	*	*	NFW1007
	307"	5.0	73-69		K1877-02	28	11	1 1/8	10T	*	*	*	NFW1007
				Optional Power Clutch Kit	PC1877-02	28	11	1 1/8	10T	*	*	*	NFW1007
	327"	5.4	67	12" Clutch	K1862-01	2,28	12	1 1/8	10T	*	*	*	*
				Optional Kit/Diaph. Cover	K1909-02	28	12	1 1/8	10T	*	*	*	*
				Optional Kit/Diaph. w/ HD Disc	K1909-02HD	28	12	1 1/8	10T	*	*	*	*
				Optional Kit/Diaph. w/ CB Disc	K1909-02CB	28	12	1 1/8	10T	*	*	*	*
				Optional Kit/Diaph. w/ Kevlar® Disc	K1909-02KL	28	12	1 1/8	10T	*	*	*	*
	350"	5.7	99-96	P Series	K70149-01	9	11 3/4	1 1/8	10T	*	SH5170	SH6133	NFW1044
				Slave Cylinder w/o Bearing	K70149-01 ⅄	9	11 3/4	1 1/8	10T	*	SH5170	SH6133WB	NFW1044
			95-91	(fr. 2/91) P Series	K1909-06	9	11 3/4	1 1/8	10T	SPH044	SH5539	SH6092	NFW1023
				Optional Kit/HD Disc	K1909-06HD	9	11 7/8	1 1/8	10T	SPH044	SH5539	SH6092	NFW1023
				Optional Kit/Non-Cam Hub Disc	K1909-02		12	1 1/8	10T	SPH044	SH5539	SH6092	NFW1023
				Optional Kit/Non-Cam Hub HD Disc	K1909-02HD		12	1 1/8	10T	SPH044	SH5539	SH6092	NFW1023
				Optional Kit/Non-Cam Hub CB Disc	K1909-02CB		12	1 1/8	10T	SPH044	SH5539	SH6092	NFW1023
				Optional Kit/Non-Cam Hub Kevlar® Disc	K1909-02KL		12	1 1/8	10T	SPH044	SH5539	SH6092	NFW1023

⅄ Slave cylinder includes bearing (not Included in Clutch Kit)

* Not Available
Ø Components Available
Š Kit Includes Concentric Slave Cylinder
ƒ Kit Includes Flywheel

© 2014 ZF North American Operations, Inc. All Rights Reserved. No portion of this work may be reproduced or copied by any means without the prior approval of ZF North American Operations, Inc.

SACHS

CLUTCH KIT

Cyl.	CC Cubic Inch	Liter	Year	Application Information	Clutch Kit	Notes Pg.180	Disc Size O.D.	Disc Size I.D.	Disc Size Teeth	PreFilled Master Or System	Master Cylinder	Slave Cylinder	Flywheel
GMC LIGHT TRUCK (Cont'd)													
G, P SERIES (Cont'd)													
8	350"	5.7	91-86	(to 1/91) P Series	K1909-02	28	12	1 1/8	10T	*	*	*	NFW1023
				Optional Kit/HD Disc	K1909-02HD	28	12	1 1/8	10T	*	*	*	NFW1023
				Optional Kit/CB Disc	K1909-02CB	28	12	1 1/8	10T	*	*	*	NFW1023
				Optional Kit/Kevlar® Disc	K1909-02KL	28	12	1 1/8	10T	*	*	*	NFW1023
			89-88	G Series	K1909-02	28	12	1 1/8	10T	*	SH5020	SH6028	NFW1023
				Optional Kit/HD Disc	K1909-02HD	28	12	1 1/8	10T	*	SH5020	SH6028	NFW1023
				Optional Kit/CB Disc	K1909-02CB	28	12	1 1/8	10T	*	SH5020	SH6028	NFW1023
				Optional Kit/Kevlar® Disc	K1909-02KL	28	12	1 1/8	10T	*	SH5020	SH6028	NFW1023
			87-86	G Series	K1909-02		12	1 1/8	10T	*	SH5032	SH6089	NFW1023
				Optional Kit/HD Disc	K1909-02HD		12	1 1/8	10T	*	SH5032	SH6089	NFW1023
				Optional Kit/CB Disc	K1909-02CB		12	1 1/8	10T	*	SH5032	SH6089	NFW1023
				Optional Kit/Kevlar® Disc	K1909-02KL		12	1 1/8	10T	*	SH5032	SH6089	NFW1023
			85	G Series	K1909-02		12	1 1/8	10T	*	*	*	NFW1007
				Optional Kit/HD Disc	K1909-02HD		12	1 1/8	10T	*	*	*	NFW1007
				Optional Kit/CB Disc	K1909-02CB		12	1 1/8	10T	*	*	*	NFW1007
				Optional Kit/Kevlar® Disc	K1909-02KL		12	1 1/8	10T	*	*	*	NFW1007
			84-70	12" Clutch	K1862-01	2,28	12	1 1/8	10T	*	*	*	NFW1007
				Optional Kit/Diaph. Cover	K1909-02	28	12	1 1/8	10T	*	*	*	NFW1007
				Optional Kit/Diaph. w/ HD Disc	K1909-02HD	28	12	1 1/8	10T	*	*	*	NFW1007
				Optional Kit/Diaph. w/ CB Disc	K1909-02CB	28	12	1 1/8	10T	*	*	*	NFW1007
				Optional Kit/Diaph. w/ Kevlar® Disc	K1909-02KL	28	12	1 1/8	10T	*	*	*	NFW1007
	379"	6.2	93-92	P Series	K1909-06	9	11 3/4	1 1/8	10T	*	SH5407	SH6092	NFW1049
				Optional Kit/HD Disc	K1909-06HD	9	11 7/8	1 1/8	10T	*	SH5407	SH6092	NFW1049
				Optional Kit/Non-Cam Hub Disc	K1909-02		12	1 1/8	10T	*	SH5407	SH6092	NFW1049
				Optional Kit/Non-Cam Hub HD Disc	K1909-02HD		12	1 1/8	10T	*	SH5407	SH6092	NFW1049
				Optional Kit/Non-Cam Hub CB Disc	K1909-02CB		12	1 1/8	10T	*	SH5407	SH6092	NFW1049
				Optional Kit/Non-Cam Hub Kevlar® Disc	K1909-02KL		12	1 1/8	10T	*	SH5407	SH6092	NFW1049
			91-90	P Series	K1909-06	9	11 3/4	1 1/8	10T	*	*	SH6413	NFW1049
				Optional Kit/HD Disc	K1909-06HD	9	11 7/8	1 1/8	10T	*	*	SH6413	NFW1049
				Optional Kit/Non-Cam Hub Disc	K1909-02		12	1 1/8	10T	*	*	SH6413	NFW1049
				Optional Kit/Non-Cam Hub HD Disc	K1909-02HD		12	1 1/8	10T	*	*	SH6413	NFW1049
				Optional Kit/Non-Cam Hub CB Disc	K1909-02CB		12	1 1/8	10T	*	*	SH6413	NFW1049
				Optional Kit/Non-Cam Hub Kevlar® Disc	K1909-02KL		12	1 1/8	10T	*	*	SH6413	NFW1049
			89-85	G Series	K1909-02	28	12	1 1/8	10T	*	*	*	NFW1049
				Optional Kit/HD Disc	K1909-02HD	28	12	1 1/8	10T	*	*	*	NFW1049
				Optional Kit/CB Disc	K1909-02CB	28	12	1 1/8	10T	*	*	*	NFW1049
				Optional Kit/Kevlar® Disc	K1909-02KL	28	12	1 1/8	10T	*	*	*	NFW1049
				P Series	K1909-02	28	12	1 1/8	10T	*	SH5032	SH6089	NFW1049
				Optional Kit/HD Disc	K1909-02HD	28	12	1 1/8	10T	*	SH5032	SH6089	NFW1049
				Optional Kit/CB Disc	K1909-02CB	28	12	1 1/8	10T	*	SH5032	SH6089	NFW1049

* Not Available
Ø Components Available
Š Kit Includes Concentric Slave Cylinder
ƒ Kit Includes Flywheel

© 2014 ZF North American Operations, Inc. All Rights Reserved. No portion of this work may be reproduced or copied by any means without the prior approval of ZF North American Operations, Inc.

CLUTCH KIT

Cyl.	CC Cubic Inch	Liter	Year	Application Information	Clutch Kit	Notes Pg.180	Disc Size O.D.	Disc Size I.D.	Disc Size Teeth	PreFilled Master Or System	Master Cylinder	Slave Cylinder	Flywheel
GMC LIGHT TRUCK (Cont'd)													
G, P SERIES (Cont'd)													
8	379"	6.2	89-85	Optional Kit/Kevlar® Disc	K1909-02KL	28	12	1 1/8	10T	*	SH5032	SH6089	NFW1049
	395"	6.5	99-96	P Series, Kit for DMF	K70147-01		11 7/8	1 1/8	10T	*	SH5170	SH6133	*
				Slave Cylinder w/o Bearing	K70147-01 ⚲		11 7/8	1 1/8	10T	*	SH5170	SH6133WB	*
				P Series, Kit for Solid Flywheel	K70187-02		11 7/8	1 1/8	10T	*	SH5170	SH6133	NFW1043
				Slave Cylinder w/o Bearing	K70187-02 ⚲		11 7/8	1 1/8	10T	*	SH5170	SH6133WB	NFW1043
				Optional Kit/HD Disc	K70187-02HD	79	11 7/8	1 1/8	10T	*	SH5170	SH6133	NFW1043
				Optional Kit/CB Disc	K70187-02CB	79	11 7/8	1 1/8	10T	*	SH5170	SH6133	NFW1043
			95-94	P Series	K1909-06	9,28	11 3/4	1 1/8	10T	SPH044	SH5407	SH6092	NFW1049
				Optional Kit/HD Disc	K1909-06HD	9,28	11 7/8	1 1/8	10T	SPH044	SH5407	SH6092	NFW1049
				Optional Kit/Non-Cam Hub Disc	K1909-02	28	12	1 1/8	10T	SPH044	SH5407	SH6092	NFW1049
				Optional Kit/Non-Cam Hub HD Disc	K1909-02HD	28	12	1 1/8	10T	SPH044	SH5407	SH6092	NFW1049
				Optional Kit/Non-Cam Hub CB Disc	K1909-02CB	28	12	1 1/8	10T	SPH044	SH5407	SH6092	NFW1049
				Optional Kit/Non-Cam Hub Kevlar® Disc	K1909-02KL	28	12	1 1/8	10T	SPH044	SH5407	SH6092	NFW1049
	400"	6.6	80-76		K1877-04	28	11	1 1/8	26T	*	*	*	NFW1040
	454"	7.4	95-91	(fr. 2/91) P Series	K1909-02	28	12	1 1/8	10T	SPH044	*	*	NFW1051
				Optional Kit/HD Disc	K1909-02HD	28	12	1 1/8	10T	SPH044	*	*	NFW1051
				Optional Kit/CB Disc	K1909-02CB	28	12	1 1/8	10T	SPH044	*	*	NFW1051
				Optional Kit/Kevlar® Disc	K1909-02KL	28	12	1 1/8	10T	SPH044	*	*	NFW1051
			91-88	(to 1/91)	K1909-02	28	12	1 1/8	10T	*	SH5020	SH6028	NFW1041
				Optional Kit/HD Disc	K1909-02HD	28	12	1 1/8	10T	*	SH5020	SH6028	NFW1041
				Optional Kit/CB Disc	K1909-02CB	28	12	1 1/8	10T	*	SH5020	SH6028	NFW1041
				Optional Kit/Kevlar® Disc	K1909-02KL	28	12	1 1/8	10T	*	SH5020	SH6028	NFW1041
			87-85	P Series	K1909-02	28	12	1 1/8	10T	*	SH5032	SH6089	NFW1041
				Optional Kit/HD Disc	K1909-02HD	28	12	1 1/8	10T	*	SH5032	SH6089	NFW1041
				Optional Kit/CB Disc	K1909-02CB	28	12	1 1/8	10T	*	SH5032	SH6089	NFW1041
				Optional Kit/Kevlar® Disc	K1909-02KL	28	12	1 1/8	10T	*	SH5032	SH6089	NFW1041
			84-73		K1862-01	2,28	12	1 1/8	10T	*	*	*	NFW1041
				Optional Kit/Diaph. Cover	K1909-02	28	12	1 1/8	10T	*	*	*	NFW1041
				Optional Kit/Diaph. w/ HD Disc	K1909-02HD	28	12	1 1/8	10T	*	*	*	NFW1041
				Optional Kit/Diaph. w/ CB Disc	K1909-02CB	28	12	1 1/8	10T	*	*	*	NFW1041
				Optional Kit/Diaph. w/ Kevlar® Disc	K1909-02KL	28	12	1 1/8	10T	*	*	*	NFW1041
			71-70		K1862-01	2,28	12	1 1/8	10T	*	*	*	NFW1041
				Optional Kit/Diaph. Cover	K1909-02	28	12	1 1/8	10T	*	*	*	NFW1041
				Optional Kit/Diaph. w/ HD Disc	K1909-02HD	28	12	1 1/8	10T	*	*	*	NFW1041
				Optional Kit/Diaph. w/ CB Disc	K1909-02CB	28	12	1 1/8	10T	*	*	*	NFW1041
				Optional Kit/Diaph. w/ Kevlar® Disc	K1909-02KL	28	12	1 1/8	10T	*	*	*	NFW1041
S15, SONOMA, T15, JIMMY, PICK-UP													
4	116"	1.9	85-84		*					*	SH5003	SH6042	*
	122"	2.0	84		K1904-01	32	9 1/8	1	14T	*	SH5003	SH6004	NFW1008
			83		K1904-01		9 1/8	1	14T	*	*	*	NFW1008
	134"	2.2	03-02		K1904-10 ⚲		9 1/8	1 1/8	26T	*	SH5181	SH6344	NFW1006
				Slave Cylinder w/o Bearing	K1904-10		9 1/8	1 1/8	26T	*	SH5181	SH6162	NFW1006

⚲ Slave cylinder includes bearing (not Included in Clutch Kit)

* Not Available
Ø Components Available
Š Kit Includes Concentric Slave Cylinder
ƒ Kit Includes Flywheel

© 2014 ZF North American Operations, Inc. All Rights Reserved. No portion of this work may be reproduced or copied by any means without the prior approval of ZF North American Operations, Inc.

SACHS

CLUTCH KIT

Cyl.	CC Cubic Inch	Liter	Year	Application Information	Clutch Kit	Notes Pg.180	Disc Size O.D.	Disc Size I.D.	Disc Size Teeth	PreFilled Master Or System	Master Cylinder	Slave Cylinder	Flywheel
GMC LIGHT TRUCK (Cont'd)													
S15, SONOMA, T15, JIMMY, PICK-UP (Cont'd)													
4	134"	2.2	01-98		K1904-09 ⅄		9 1/8	1 1/8	26T	*	SH5181	SH6133WB	NFW1006
				Slave Cylinder w/o Bearing	K1904-09		9 1/8	1 1/8	26T	*	SH5181	SH6133	NFW1006
			97-96		K1904-09 ⅄		9 1/8	1 1/8	26T	*	SH5171	SH6133WB	NFW1006
				Slave Cylinder w/o Bearing	K1904-09		9 1/8	1 1/8	26T	*	SH5171	SH6133	NFW1006
			95-94		K1904-08	32	9 1/8	1 1/8	26T	SPH008	SH5048	SH6043	NFW1006
			85-84		*					*	SH5003	SH6042	*
	151"	2.5	93-92		K1904-01	32	9 1/8	1	14T	SPH001	SH5049	SH6043	NFW1008
			91-85		K1904-01	32	9 1/8	1	14T	*	SH5003	SH6004	NFW1008
6	173"	2.8	93-92		K1904-03	9,32	9 1/8	1	14T	SPH014	SH5049	SH6043	NFW1009
				Optional Kit/Non-Cam Hub Disc	K1904-01	32	9 1/8	1	14T	SPH014	SH5049	SH6043	NFW1009
			91-90		K1904-03	9,32	9 1/8	1	14T	*	SH5003	SH6004	NFW1009
				Optional Kit/Non-Cam Hub Disc	K1904-01	32	9 1/8	1	14T	*	SH5003	SH6004	NFW1009
			89-88		K1904-01	32	9 1/8	1	14T	*	SH5003	SH6004	NFW1009
			87-85		K1904-01	32	9 1/8	1	14T	*	SH5003	SH6004	*
	262"	4.3	04-98	ZN4 eng.	K70169-01 ⅄	9	11	1 1/8	10T	*	SH5181	SH6133WB	NFW1046
				Slave Cylinder w/o Bearing	K70169-01	9	11	1 1/8	10T	*	SH5181	SH6133	NFW1046
				Optional Kit/Non-Predamp Disc	K70169-02		11	1 1/8	10T	*	SH5181	SH6133	NFW1046
			98	exc. ZN4 eng.	K70169-01 ⅄	9	11	1 1/8	10T	*	SH5181	SH6133WB	NFW1021
				Slave Cylinder w/o Bearing	K70169-01	9	11	1 1/8	10T	*	SH5181	SH6133	NFW1021
				Optional Kit/Non-Predamp Disc	K70169-02		11	1 1/8	10T	*	SH5181	SH6133	NFW1021
			97-96	8th Digit of VIN # W	K70169-01 ⅄	9	11	1 1/8	10T	*	SH5181	SH6133WB	NFW1046
				Slave Cylinder w/o Bearing	K70169-01	9	11	1 1/8	10T	*	SH5181	SH6133	NFW1046
				Optional Kit/Non-Predamp Disc	K70169-02		11	1 1/8	10T	*	SH5181	SH6133	NFW1046
				8th Digit of VIN # X	K70169-01 ⅄	9	11	1 1/8	10T	*	SH5181	SH6133	NFW1046
				Slave Cylinder w/o Bearing	K70169-01	9	11	1 1/8	10T	*	SH5181	SH6133WB	NFW1046
				Optional Kit/Non-Predamp Disc	K70169-02		11	1 1/8	10T	*	SH5181	SH6133	NFW1046
			95-94	Cast # 14103282	K70375-01	1,9,32	11	1 1/8	10T	*	SH5048	SH6044	NFW1046
				Optional Kit/HD Disc	K70375-01HD	32	11	1 1/8	10T	*	SH5048	SH6044	NFW1046
				Cast # 10218653	K70375-01	1,9,32	11	1 1/8	10T	*	SH5048	SH6044	NFW1031
				Optional Kit/HD Disc	K70375-01HD	32	11	1 1/8	10T	*	SH5048	SH6044	NFW1031
			93	8th Digit of VIN # Z	K70375-01	1,9,32	11	1 1/8	10T	*	SH5049	SH6044	NFW1031
				Optional Kit/HD Disc	K70375-01HD	32	11	1 1/8	10T	*	SH5049	SH6044	NFW1031
			92-90	8th Digit of VIN # Z	K1877-09	1,9,32	11	1 1/8	10T	*	SH5049	SH6044	NFW1046
				Optional Kit/Non-Cam Hub Disc	K1877-02	32	11	1 1/8	10T	*	SH5049	SH6044	NFW1046
				Optional Power Clutch Kit	PC1877-02	32	11	1 1/8	10T	*	SH5049	SH6044	NFW1046
			89-88		K1877-09	1,9,32	11	1 1/8	10T	*	SH5003	SH6030	NFW1021
				Optional Kit/Non-Cam Hub Disc	K1877-02	32	11	1 1/8	10T	*	SH5003	SH6030	NFW1021
				Optional Power Clutch Kit	PC1877-02	32	11	1 1/8	10T	*	SH5003	SH6030	NFW1021
SAFARI													
4	151"	2.5	90-85		K1902-03	9	9 1/8	1	14T	*	SH5379	SH6358	*
				Optional Kit/Non-Cam Hub Disc	K1902-01		9 1/8	1	14T	*	SH5379	SH6358	*
6	262"	4.3	90-86		K1877-08	9	11	1	14T	*	SH5379	SH6358	NFW1023
			85		K1877-08	9	11	1	14T	*	SH5379	SH6358	NFW1007

⅄ Slave cylinder includes bearing (not Included in Clutch Kit)

* Not Available
Ø Components Available
Š Kit Includes Concentric Slave Cylinder
ƒ Kit Includes Flywheel

© 2014 ZF North American Operations, Inc. All Rights Reserved. No portion of this work may be reproduced or copied by any means without the prior approval of ZF North American Operations, Inc.

CLUTCH KIT

Cyl.	CC Cubic Inch	Liter	Year	Application Information	Clutch Kit	Notes Pg.180	Disc Size O.D.	Disc Size I.D.	Disc Size Teeth	PreFilled Master Or System	Master Cylinder	Slave Cylinder	Flywheel
GMC LIGHT TRUCK (Cont'd)													
SPRINT													
6	250"	4.1	77-75	Replaces O.E. 11" Clutch	K1874-06	28	10	1 1/8	10T	*	*	*	*
				Optional Kit/HD Disc	K5473-01		11	1 1/8	10T	*	*	*	*
			72-71	Replaces O.E. 11" Clutch	K1874-06	28	10	1 1/8	10T	*	*	*	*
				Optional Kit/HD Disc	K5473-01		11	1 1/8	10T	*	*	*	*
8	305"	5.0	77-76	10 1/2" Clutch	K1874-02	28	10 1/2	1 1/8	10T	*	*	*	*
				11" Clutch	K5473-01		11	1 1/8	10T	*	*	*	*
	307"	5.0	73-71	3 Spd., 10 1/2" Clutch	K1874-02	28	10 1/2	1 1/8	10T	*	*	*	*
				4 Spd., 10 1/2" Clutch	K1675-10		10 1/2	1 1/8	10T	*	*	*	*
				3 Spd., 11" Clutch	K5473-01		11	1 1/8	10T	*	*	*	*
	350"	5.7	75-71	3 Spd.	K1675-10	28	10 1/2	1 1/8	10T	*	*	*	*
YUKON													
8	350"	5.7	95-92		K1909-06	9	11 3/4	1 1/8	10T	SPH044	SH5179	SH6092	NFW1023
				Optional Kit/HD Disc	K1909-06HD	9	11 7/8	1 1/8	10T	SPH044	SH5179	SH6092	NFW1023
				Optional Kit/Non-Cam Hub Disc	K1909-02		12	1 1/8	10T	SPH044	SH5179	SH6092	NFW1023
				Optional Kit/Non-Cam Hub HD Disc	K1909-02HD		12	1 1/8	10T	SPH044	SH5179	SH6092	NFW1023
				Optional Kit/Non-Cam Hub CB Disc	K1909-02CB		12	1 1/8	10T	SPH044	SH5179	SH6092	NFW1023
				Optional Kit/Non-Cam Hub Kevlar® Disc	K1909-02KL		12	1 1/8	10T	SPH044	SH5179	SH6092	NFW1023
GMC MEDIUM TRUCK													
C4500-7500, TOPKICK, T6500-7500													
6	292"	4.8	89-80	Spicer Style Kit w/ CB Disc	K70200-01	28	13	1 1/2	10T	*	*	*	*
			89-63	12" Clutch	K1862-01	2,28	12	1 1/8	10T	*	*	*	*
				Optional Kit/Diaph. Cover	K1909-02	28	12	1 1/8	10T	*	*	*	*
				Optional Kit/Diaph. w/ HD Disc	K1909-02HD	28	12	1 1/8	10T	*	*	*	*
				Optional Kit/Diaph. w/ CB Disc	K1909-02CB	28	12	1 1/8	10T	*	*	*	*
				Optional Kit/Diaph. w/ Kevlar® Disc	K1909-02KL	28	12	1 1/8	10T	*	*	*	*
				Diaph. Cover	K1919-20	28	12 7/8	1 1/2	10T	*	*	*	*
				Optional Kit/Diaph. w/ CB Disc	K1919-01	28	13	1 1/2	10T	*	*	*	*
				Optional Kit/Diaph. w/ Kevlar® Disc	K1919-05KL	28	12 7/8	1 1/2	10T	*	*	*	*
	403"	6.6	98-97		K70293-01 ♌		13	1 1/2	10T	*	*	*	*
			96-90	Eaton Trans.	K70324-01 ◎		14	1 3/4	10T	*	*	*	*
	441"	7.2	03-99	C6500 Topkick, C7500 Topkick, Eaton trans., Pull Type	K70323-01 ◎		14	1 3/4	10T	*	*	*	*
			02-98	T6500, T7500, Eaton trans., Pull Type	K70324-01 ◎		14	1 3/4	10T	*	*	*	*
8	350"	5.7	90		K1882-02	2,28	12 7/8	1 1/2	10T	*	*	*	*
				Optional Kit/CB Disc	K1882-01	2,28	13	1 1/2	10T	*	*	*	*
				Optional Kit/Diaph. w/ CB Disc	K1919-01	28	13	1 1/2	10T	*	*	*	*
			89-80	Spicer Style Kit w/ CB Disc	K70200-01	28	13	1 1/2	10T	*	*	*	*
			89-63	12" Clutch	K1862-01	2,28	12	1 1/8	10T	*	*	*	*
				Optional Kit/Diaph. Cover	K1909-02	28	12	1 1/8	10T	*	*	*	*
				Optional Kit/Diaph. w/ HD Disc	K1909-02HD	28	12	1 1/8	10T	*	*	*	*
				Optional Kit/Diaph. w/ CB Disc	K1909-02CB	28	12	1 1/8	10T	*	*	*	*
				Optional Kit/Diaph. w/ Kevlar® Disc	K1909-02KL	28	12	1 1/8	10T	*	*	*	*

♌ 1994-97 O.E. 13" Valeo clutch kit can replace the 14" spicer style kit only for standard Kodiak and/or Topkick models where there is a dual-drilled flywheel. Optional engine/transmission designs are excluded.
◎ Kit Only

* Not Available
Ø Components Available
Š Kit Includes Concentric Slave Cylinder
ƒ Kit Includes Flywheel

© 2014 ZF North American Operations, Inc. All Rights Reserved. No portion of this work may be reproduced or copied by any means without the prior approval of ZF North American Operations, Inc.

SACHS

CLUTCH KIT

Cyl.	CC Cubic Inch	Liter	Year	Application Information	Clutch Kit	Notes Pg.180	Disc Size O.D.	Disc Size I.D.	Disc Size Teeth	PreFilled Master Or System	Master Cylinder	Slave Cylinder	Flywheel
GMC MEDIUM TRUCK (Cont'd)													
C4500-7500, TOPKICK, T6500-7500 (Cont'd)													
8	350"	5.7	89-63	Diaph. Cover	K1919-20	28	12 7/8	1 1/2	10T	*	*	*	*
				Optional Kit/Diaph. w/ CB Disc	K1919-01	28	13	1 1/2	10T	*	*	*	*
				Optional Kit/Diaph. w/ Kevlar® Disc	K1919-05KL	28	12 7/8	1 1/2	10T	*	*	*	*
	366"	6.0	98-97		K1882-03	2,28	12 7/8	1 1/2	10T	*	*	*	NFW1093
				Optional Kit/CB Disc	K1882-03CB	2,28	12 7/8	1 1/2	10T	*	*	*	NFW1093
				Optional Kit/Diaph. Cover	K1919-05		12 7/8	1 1/2	10T	*	*	*	NFW1093
				Optional Kit/Diaph. w/ CB Disc	K1919-04		13	1 1/2	10T	*	*	*	NFW1093
			96-90		K1882-03	2,28	12 7/8	1 1/2	10T	*	*	*	NFW1093
				Optional Kit/CB Disc	K1882-03CB	2,28	12 7/8	1 1/2	10T	*	*	*	NFW1093
				Optional Kit/Diaph. Cover	K1919-05		12 7/8	1 1/2	10T	*	*	*	NFW1093
				Optional Kit/Diaph. w/ CB Disc	K1919-04		13	1 1/2	10T	*	*	*	NFW1093
			95-90	Spicer Style Kit w/ CB Disc	K70200-01		13	1 1/2	10T	*	*	*	*
			89-85	exc. MWX trans.	K1882-02	2,28	12 7/8	1 1/2	10T	*	*	*	*
				Optional Kit/CB Disc	K1882-01	2,28	13	1 1/2	10T	*	*	*	*
				MWX Trans.	K1882-02	2,28	12 7/8	1 1/2	10T	*	*	*	NFW1091
				Optional Kit/CB Disc	K1882-01	2,28	13	1 1/2	10T	*	*	*	NFW1091
			89-63	Diaph. Cover	K1919-20		12 7/8	1 1/2	10T	*	*	*	*
				Optional Kit/Diaph. w/ CB Disc	K1919-01		13	1 1/2	10T	*	*	*	*
				Optional Kit/Diaph. w/ Kevlar® Disc	K1919-05KL		12 7/8	1 1/2	10T	*	*	*	*
	403"	6.6	07-03	121mm Bearing Length	K0514-01 ◎		13	1 1/2	10T	*	*	*	*
			05-03	72mm Bearing Length	K0513-01 ◎		13	1 1/2	10T	*	*	*	*
	427"	7.0	98-94		K70293-01 ♌		13	1 1/2	10T	*	*	*	*
			93-90		K1882-04	2,28	13	1 1/2	10T	*	*	*	*
				Optional Kit/Diaph. Cover	K1919-05		12 7/8	1 1/2	10T	*	*	*	*
				Optional Kit/Diaph. w/ CB Disc	K1919-04		13	1 1/2	10T	*	*	*	*
			89-85		K1882-02	2,28	12 7/8	1 1/2	10T	*	*	*	*
				Optional Kit/CB Disc	K1882-01	2,28	13	1 1/2	10T	*	*	*	*
			84-65	Diaph. Cover	K1919-20		12 7/8	1 1/2	10T	*	*	*	*
				Optional Kit/Diaph. w/ CB Disc	K1919-01		13	1 1/2	10T	*	*	*	*
				Optional Kit/Diaph. w/ Kevlar® Disc	K1919-05KL		12 7/8	1 1/2	10T	*	*	*	*
	454"	7.4	01-99		K70293-01 ♌		13	1 1/2	10T	*	*	*	*
	496"	8.1	07-03	121mm Bearing Length	K0514-01 ◎		13	1 1/2	10T	*	*	*	*
			05-03	72mm Bearing Length	K0513-01 ◎		13	1 1/2	10T	*	*	*	*
				Pull Type	K70323-01 ◎		14	1 3/4	10T	*	*	*	*
FORWARD (W3500-5500)													
4	236"	3.9	99-95	(fr. 7-95) W4500	K70320-03	28	12	1 1/8	21T	*	*	*	*
			97-95	W3500	K70320-02	28	11 3/4	1 1/8	21T	*	SH5039	SH6388	*
			95-90	(fr. 6/90 to 6/95) W4500	K70320-02	28	11 3/4	1 1/8	21T	*	*	*	*
			90-85	(to 5/90) W4500	K32232-01		10 3/4	1	24T	*	*	*	*
				Optional Kit/CB Disc	K32232-02		10 3/4	1	24T	*	*	*	*
	290"	4.8	01-99	w/ brake booster	K70321-01	28	12 3/4	1 1/2	10T	*	*	*	*
				w/o brake booster	K70322-01	28	12	1 1/8	21T	*	*	*	*

♌ 1994-97 O.E. 13" Valeo clutch kit can replace the 14" spicer style kit only for standard Kodiak and/or Topkick models where there is a dual-drilled flywheel. Optional engine/transmission designs are excluded.
◎ Kit Only

* Not Available
Ø Components Available
Š Kit Includes Concentric Slave Cylinder
ƒ Kit Includes Flywheel

© 2014 ZF North American Operations, Inc. All Rights Reserved. No portion of this work may be reproduced or copied by any means without the prior approval of ZF North American Operations, Inc.

CLUTCH KIT

Cyl.	CC Cubic Inch	Liter	Year	Application Information	Clutch Kit	Notes Pg.180	Disc Size O.D.	Disc Size I.D.	Disc Size Teeth	PreFilled Master Or System	Master Cylinder	Slave Cylinder	Flywheel
HINO MEDIUM TRUCK													
FB													
4	234"	3.8	88-87		K34451-01	2	11 3/4	1 1/2	10T	*	*	*	*
FD													
6	367"	6.0	87-86		K31992-01	2	12 3/4	1 1/2	10T	*	*	*	*
FE													
6	367"	6.0	87-86		K31992-01	2	12 3/4	1 1/2	10T	*	*	*	*
	411"	6.7	88-85		K31230-01	2	13 3/4	1 3/4	10T	*	*	*	*
FF													
6	411"	6.7	88-85		K31230-01	2	13 3/4	1 3/4	10T	*	*	*	*
FG													
6	396"	6.5	88-86		K31981-01	2	15	1 3/4	10T	*	*	*	*
SG													
6	396"	6.5	88-87		K31981-01	2	15	1 3/4	10T	*	*	*	*
HONDA													
ACCORD													
4	1599cc	1.6	78-76		KF595-01		7 1/2	13/16	19T	*	SH5035	SH6034	*
	1751cc	1.8	83		KF615-01		7 7/8	27/32	21T	*	*	*	NFW3602
			82		KF598-02		7 7/8	7/8	21T	*	*	*	*
			81-79		KF598-01		7 7/8	7/8	21T	*	SH5035	SH6034	*
	1829cc	1.8	85-84		KF615-01		7 7/8	27/32	21T	*	*	*	NFW3602
	1955cc	2.0	89-86		KF609-01		8 3/8	27/32	21T	*	*	*	NFW3606
	2156cc	2.2	97-90		KF701-01		8 7/8	1 1/32	24T	*	SH5027	SH6021	NFW3607
	2254cc	2.3	02-00		KF701-01		8 7/8	1 1/32	24T	*	SH5222	SH6160	NFW3607
			99-98		KF701-01	69	8 7/8	1 1/32	24T	*	SH5187	SH6160	NFW3607
	2354cc	2.4	12-08		K70618-01 ◎		8 7/8	1	24T	*	SH5489	SH6513	NFW9135
			07-03		K70381-02 ◎		8 7/8	1	24T	*	SH5199	SH6167	NFW9129
6	2977cc	3.0	05-03		K70352-01 ◎	60	9 1/2	1	24T	*	SH5199	*	DMF91150
	2997cc	3.0	07-06		K70352-01 ◎	60	9 1/2	1	24T	*	SH5199	*	DMF91150
	3471cc	3.5	13-08		K70352-01 ◎		9 1/2	1	24T	*	SH5489	*	*
CIVIC													
4	1237cc	1.2	79-73		KF581-01		7 1/2	13/16	19T	*	*	*	*
	1335cc	1.3	83-80		KF608-01		7 1/2	13/16	19T	*	*	*	*
	1339cc	1.3	05-03		*					*	SH5223	*	*
	1342cc	1.3	87-84		KF612-01		7 1/2	13/16	19T	*	*	*	NFW3615
	1487cc	1.5	87-85	4WD Wagon	KF612-02		7 1/2	13/16	19T	*	*	*	*
			87-84	FWD	KF612-01		7 1/2	13/16	19T	*	*	*	NFW3615
			83-81		KF608-01		7 1/2	13/16	19T	*	*	*	*
			80	exc. Wagon	KF595-01		7 1/2	13/16	19T	*	*	*	*
				Wagon	KF608-01		7 1/2	13/16	19T	*	*	*	*
			79-75		KF581-01		7 1/2	13/16	19T	*	*	*	*
	1493cc	1.5	95-92		KF702-03		8 3/8	7/8	20T	*	SH5036	SH6035	NFW3611
			91-90		KF702-01		8 3/8	7/8	20T	*	*	*	NFW3611
			89		KF640-03		7 7/8	27/32	20T	*	*	*	NFW3614
			88		KF640-02		7 1/2	27/32	21T	*	*	*	NFW3614
	1590cc	1.6	00-92	exc. Si	KF702-03		8 3/8	7/8	20T	*	SH5036	SH6035	NFW3611

◎ Kit Only

* Not Available
Ø Components Available
Š Kit Includes Concentric Slave Cylinder
ƒ Kit Includes Flywheel

© 2014 ZF North American Operations, Inc. All Rights Reserved. No portion of this work may be reproduced or copied by any means without the prior approval of ZF North American Operations, Inc.

SACHS

CLUTCH KIT

Cyl.	CC Cubic Inch	Liter	Year	Application Information	Clutch Kit	Notes Pg.180	Disc Size O.D.	Disc Size I.D.	Disc Size Teeth	PreFilled Master Or System	Master Cylinder	Slave Cylinder	Flywheel
HONDA (Cont'd)													
CIVIC (Cont'd)													
4	1590cc	1.6	95	Si	KF702-03		8 3/8	7/8	20T	*	SH5036	SH6035	NFW3611
			91-90	FWD	KF702-01		8 3/8	7/8	20T	*	*	*	NFW3611
				4WD	KF702-02		8 3/8	27/32	20T	*	*	*	NFW3611
			89	FWD	KF640-03		7 7/8	27/32	20T	*	*	*	NFW3614
				4WD	KF640-05		7 7/8	27/32	20T	*	*	*	NFW3614
			88	4WD	KF640-04		7 7/8	27/32	21T	*	*	*	NFW3614
	1595cc	1.6	00-99	Si	K70073-02		8 5/8	1 1/32	24T	*	SH5036	SH6035	*
				Optional Kit/HD Disc	K70073-02HD		8 5/8	1 1/32	24T	*	SH5036	SH6035	*
	1668cc	1.7	05		KF702-03		8 3/8	7/8	20T	*	SH5223	SH6185	NFW9140
			01		KF702-03		8 3/8	7/8	20T	*	SH5223	SH6185	NFW9140
	1700cc	1.7	04-02		KF702-03		8 3/8	7/8	20T	*	SH5223	SH6185	NFW9140
	1799cc	1.8	14-06		K0518-01 ◎		8 1/2	27/32	20T	*	SH5489	SH6526	*
	1998cc	2.0	11-10	Si	K70346-01		8 1/2	1 1/8	24T	*	SH5489	SH6513	*
			09-06	Si	K70346-01		8 1/2	1 1/8	24T	*	SH5489	*	*
			05-02		K70345-01		8 1/2	1 1/8	24T	*	SH5199	SH6167	*
CIVIC DEL SOL													
4	1493cc	1.5	95-93		KF702-03		8 3/8	7/8	20T	*	SH5036	SH6035	NFW3611
	1590cc	1.6	97-96	exc. VTEC	KF640-06		7 7/8	27/32	20T	*	SH5036	SH6035	NFW3614
			95-94	VTEC	K70073-02		8 5/8	1 1/32	24T	*	SH5036	SH6035	*
				Optional Kit/HD Disc	K70073-02HD		8 5/8	1 1/32	24T	*	SH5036	SH6035	*
			95-93	exc. VTEC	KF702-03		8 3/8	7/8	20T	*	SH5036	SH6035	NFW3611
	1595cc	1.6	97-96	VTEC	K70073-02		8 5/8	1 1/32	24T	*	SH5036	SH6035	*
				Optional Kit/HD Disc	K70073-02HD		8 5/8	1 1/32	24T	*	SH5036	SH6035	*
CRX													
4	1342cc	1.3	84		KF612-01		7 1/2	13/16	19T	*	*	*	*
	1493cc	1.5	91-90		KF702-01		8 3/8	7/8	20T	*	*	*	NFW3611
			89		KF640-03		7 7/8	27/32	20T	*	*	*	NFW3614
			88		KF640-02		7 1/2	27/32	21T	*	*	*	NFW3614
	1590cc	1.6	91-90		KF702-01		8 3/8	7/8	20T	*	*	*	NFW3611
			89		KF640-03		7 7/8	27/32	20T	*	*	*	NFW3614
			88		KF640-02		7 1/2	27/32	21T	*	*	*	NFW3614
CR-Z													
4	1497cc	1.5	14-11		*					*	*	SH6526	*
FIT													
4	1497cc	1.5	13-09		K70616-01 ◎		7 1/2	7/8	20T	*	*	SH6526	*
			08-07		K70447-01 ◎		7 1/2	7/8	20T	*	*	*	*
INSIGHT													
3	995cc	1.0	06-00		K70274-01		7 1/2	7/8	20T	*	*	*	*
PRELUDE													
4	1751cc	1.8	82-79		KF598-01		7 7/8	7/8	21T	*	*	SH6034	*
	1829cc	1.8	87-83		KF615-01		7 7/8	27/32	21T	*	SH5036	SH6035	NFW3606
	1955cc	2.0	87-85		KF609-01		8 3/8	27/32	21T	*	*	*	NFW3606
	1958cc	2.0	91-90		KF790-01		8 5/8	1 1/32	24T	*	SH5019	SH6017	*
			89-88		KF705-01		8 3/8	31/32	24T	*	SH5019	SH6017	*

◎ Kit Only

* Not Available
Ø Components Available
Š Kit Includes Concentric Slave Cylinder
ƒ Kit Includes Flywheel

© 2014 ZF North American Operations, Inc. All Rights Reserved. No portion of this work may be reproduced or copied by any means without the prior approval of ZF North American Operations, Inc.

CLUTCH KIT

Cyl.	CC Cubic Inch	Liter	Year	Application Information	Clutch Kit	Notes Pg.180	Disc Size O.D.	Disc Size I.D.	Disc Size Teeth	PreFilled Master Or System	Master Cylinder	Slave Cylinder	Flywheel
HONDA (Cont'd)													
PRELUDE (Cont'd)													
4	2056cc	2.1	91-90		KF790-01		8 5/8	1 1/32	24T	*	SH5019	SH6017	*
	2156cc	2.2	01-92	exc. VTEC	KF701-02		8 5/8	1 1/32	24T	*	SH5027	SH6021	NFW3607
			96-95	VTEC	*					*	SH5027	SH6021	NFW3607
	2259cc	2.3	96-92		KF701-02		8 5/8	1 1/32	24T	*	SH5027	SH6021	NFW3607
S2000													
4	1997cc	2.0	03-00		K70310-01		8 3/8	1 1/32	24T	*	SH5225	SH6187	*
	2157cc	2.2	09-04		K70310-01		8 3/8	1 1/32	24T	*	SH5225	SH6187	*
HONDA LIGHT TRUCK													
CR-V													
4	1972cc	2.0	01-98		K70073-02		8 5/8	1 1/32	24T	*	SH5226	SH6035	NFW2108
				Optional Kit/HD Disc	K70073-02HD		8 5/8	1 1/32	24T	*	SH5226	SH6035	NFW2108
	2354cc	2.4	06-02		K70366-01 ◎		9	1 1/32	24T	*	SH5199	SH6167	*
ELEMENT													
4	2354cc	2.4	09-03		K70366-01 ◎		9	1 1/32	24T	*	SH5199	SH6167	*
PASSPORT													
4	2559cc	2.6	96-94		KF707-02		9 1/2	1	24T	*	SH5025	SH6373	NFW3621
6	3165cc	3.2	02-94		K70107-01		10 1/4	1	24T	*	SH5025	SH6188	NFW4001
HUMMER													
H3													
5	211"	3.5	06		K70394-01 Š		10 3/8	1 1/8	26T	*	SH5304	SB60193	*
	223"	3.7	10-07		K70394-01 Š		10 3/8	1 1/8	26T	*	SH5304	SB60193	*
H3T													
5	223"	3.7	10-09		K70394-01 Š		10 3/8	1 1/8	26T	*	SH5304	SB60193	*
HYUNDAI													
ACCENT													
4	1495cc	1.5	02-00		KF621-06		7 7/8	7/8	20T	*	*	SH6189	*
			99-95		KF621-06		7 7/8	7/8	20T	*	SH5434	SH6189	*
	1591cc	1.6	14-12		K70634-01		8 1/2	57/64	20T	*	*	SH6503	*
	1599cc	1.6	11-06		K70304-01 ◎		8 1/2	7/8	20T	*	*	SH6503	NFW9146
	1600cc	1.6	05		K70304-01 ◎		8 1/2	7/8	20T	*	SH5316	SH6189	*
			04-01		K70304-01 ◎		8 1/2	7/8	20T	*	*	SH6189	*
ELANTRA													
4	1599cc	1.6	95-94		K0107-01		8 1/2	7/8	20T	*	*	SH6048	*
			93-92	(to 9/93)	KF621-03		7 7/8	7/8	20T	*	*	SH6048	NFW5106
	1795cc	1.8	98-96		K70178-01	70	8 1/2	7/8	20T	*	SH5231	SH6048	*
	1797cc	1.8	13-11		K70604-01		9 1/4	7/8	20T	*	*	SH6503	*
	1836cc	1.8	95-93		K0107-01		8 1/2	7/8	20T	*	*	SH6048	*
	1975cc	2.0	12-07		K70510-01		8 1/2	7/8	20T	*	SH5509	SH6503	NFW9138
			06-05		K70178-01	70	8 1/2	7/8	20T	*	SH5317	SH6190	NFW9124
			04-01		K70178-01	70	8 1/2	7/8	20T	*	SH5228	SH6190	NFW9124
			00		K70178-01	70	8 1/2	7/8	20T	*	SH5231	SH6190	NFW9124
			99		K70178-01	70	8 1/2	7/8	20T	*	SH5231	SH6190	*
ELANTRA COUPE													
4	1999cc	2.0	14		K70604-01		9 1/4	7/8	20T	*	*	SH6503	*

◎ Kit Only

* Not Available
Ø Components Available
Š Kit Includes Concentric Slave Cylinder
ƒ Kit Includes Flywheel

© 2014 ZF North American Operations, Inc. All Rights Reserved. No portion of this work may be reproduced or copied by any means without the prior approval of ZF North American Operations, Inc.

SACHS

CLUTCH KIT

Cyl.	CC Cubic Inch	Liter	Year	Application Information	Clutch Kit	Notes Pg.180	Disc Size O.D.	Disc Size I.D.	Disc Size Teeth	PreFilled Master Or System	Master Cylinder	Slave Cylinder	Flywheel
HYUNDAI (Cont'd)													
ELANTRA GT													
4	1999cc	2.0	14		K70604-01		9 1/4	7/8	20T	*	*	SH6503	*
EXCEL													
4	1468cc	1.5	94-90	(fr. 7/89)	KF621-03	39	7 7/8	7/8	20T	*	*	SH6013	*
			89-86	(to 6/89)	KF600-02	39	7 1/4	7/8	20T	*	*	*	*
GENESIS COUPE													
4	1998cc	2.0	12-10	Turbo	K70627-01 ◎		9 3/8	1 1/8	23T	*	*	SB60316	*
6	3778cc	3.8	13-10		*					*	*	SB60316	*
PONY (CANADA ONLY)													
4	1393cc	1.4	87-84		KF600-02		7 1/4	7/8	20T	*	*	*	*
	1596cc	1.6	87		KF621-03		7 7/8	7/8	20T	*	*	*	*
			85		KF621-03		7 7/8	7/8	20T	*	*	*	*
SCOUPE													
4	1468cc	1.5	92-91		KF621-03		7 7/8	7/8	20T	*	*	SH6013	NFW5106
	1495cc	1.5	95-93	Turbo	K0107-01		8 1/2	7/8	20T	*	SH5068	*	*
				Non-Turbo	KF621-03		7 7/8	7/8	20T	*	SH5068	*	*
SONATA													
4	1997cc	2.0	98-95	(fr. 11/1/94)	K70179-01		8 7/8	7/8	20T	*	SH5428	SH6048	*
			95-92	(to 11/1/94)	K0107-01		8 1/2	7/8	20T	*	SH5051	SH6048	*
	2351cc	2.4	05-01		K70292-01	60	8 7/8	13/16	20T	*	SH5229	SH6190	DMF91129
				Optional Kit w/ Solid Flywheel	K70449-01 ƒ◎		8 7/8	13/16	20T	*	SH5229	SH6190	*
			00-99		K70332-01	60	8 7/8	7/8	20T	*	SH5229	SH6190	DMF91129
			91-89		KF728-01		8 7/8	7/8	20T	*	SH5150	SH6048	*
	2359cc	2.4	13-11		*					*	*	SB60253	*
			10-09		K70557-01 Š		9 1/4	1	23T	*	*	SB60253	DMF91182
			08		K70508-01 Š◎		9 1/4	1 1/16	23T	*	*	SB60253	*
			07-06		K70508-01 Š◎	60	9 1/4	1 1/16	23T	*	SH5510	SB60253	DMF91129
6	2493cc	2.5	01		K70292-01	60	8 7/8	13/16	20T	*	SH5229	SH6190	DMF91129
				Optional Kit w/ Solid Flywheel	K70449-01 ƒ◎		8 7/8	13/16	20T	*	SH5229	SH6190	*
			00-99		K70332-01	60	8 7/8	7/8	20T	*	SH5229	SH6190	DMF91129
				Optional Kit w/ Solid Flywheel	K70450-01 ƒ◎		8 7/8	7/8	20T	*	SH5229	SH6190	*
	2656cc	2.7	05-02		K70292-01	60	8 7/8	13/16	20T	*	SH5229	SH6190	DMF91129
				Optional Kit w/ Solid Flywheel	K70450-01 ƒ◎		8 7/8	7/8	20T	*	SH5229	SH6190	*
STELLAR (CANADA ONLY)													
4	1596cc	1.6	86		KF621-03		7 7/8	7/8	20T	*	*	*	*
			85		KF600-02		7 1/4	7/8	20T	*	*	*	*
TIBURON													
4	1795cc	1.8	97		K70178-01	70	8 1/2	7/8	20T	*	SH5231	SH6190	*
	1975cc	2.0	08-03		K70178-01	70	8 1/2	7/8	20T	*	SH5228	SH6190	NFW9124
			97		K70178-01	70	8 1/2	7/8	20T	*	SH5231	SH6190	*
	1997cc	2.0	01-00	(fr. 8/99)	K70178-01	70	8 1/2	7/8	20T	*	SH5231	SH6190	NFW9124
			00-98	(to 8/99)	K70178-01	70	8 1/2	7/8	20T	*	SH5231	SH6190	*
6	2656cc	2.7	08-07	(fr. 4/25/07)	K70292-01	60	8 7/8	13/16	20T	*	*	SH6190	DMF91118
				Optional Kit w/ Solid Flywheel	K70448-01 ƒ◎		8 7/8	13/16	20T	*	*	SH6190	*
			07-05	(fr. 11/1/04 to 4/25/07)	K70292-01	60	8 7/8	13/16	20T	*	SH5228	SH6190	DMF91118
				Optional Kit w/ Solid Flywheel	K70448-01 ƒ◎		8 7/8	13/16	20T	*	SH5228	SH6190	*

◎ Kit Only

* Not Available
Ø Components Available
Š Kit Includes Concentric Slave Cylinder
ƒ Kit Includes Flywheel

© 2014 ZF North American Operations, Inc. All Rights Reserved. No portion of this work may be reproduced or copied by any means without the prior approval of ZF North American Operations, Inc.

CLUTCH KIT

Cyl.	CC Cubic Inch	Liter	Year	Application Information	Clutch Kit	Notes Pg.180	Disc Size O.D.	Disc Size I.D.	Disc Size Teeth	PreFilled Master Or System	Master Cylinder	Slave Cylinder	Flywheel
HYUNDAI (Cont'd)													
TIBURON (Cont'd)													
6	2656cc	2.7	05-03	(to 11/1/04)	K70292-01	60	8 7/8	13/16	20T	*	SH5232	SH6190	DMF91118
				Optional Kit w/ Solid Flywheel	K70448-01 ƒ◎		8 7/8	13/16	20T	*	SH5232	SH6190	*
VELOSTER													
4	1591cc	1.6	14-12	Base	K70634-01		8 1/2	57/64	20T	*	*	SH6503	*
HYUNDAI LIGHT TRUCK													
SANTA FE													
4	2351cc	2.4	04		K70292-02	60	8 7/8	7/8	20T	*	SH5233	SH6190	DMF91129
				Optional Kit w/ Solid Flywheel	K70449-01 ƒ◎		8 7/8	13/16	20T	*	SH5233	SH6190	*
			03-01		K70292-01	60	8 7/8	13/16	20T	*	SH5233	SH6190	DMF91129
				Optional Kit w/ Solid Flywheel	K70449-01 ƒ◎		8 7/8	13/16	20T	*	SH5233	SH6190	*
	2359cc	2.4	11-10		K70642-01 Š		9 29/64	1	23T	*	*	SB60253	*
6	2656cc	2.7	09-08	(fr. 3/7/08)	K70644-01 Š		9 29/64	1	23T	*	SH5508	SB60253	*
			08-07	(to 3/7/08)	K70559-01 Š◎		9 7/16	1	23T	*	SH5508	SB60253	*
TUCSON													
4	1975cc	2.0	13-11		K70658-01					*	*	SH6190	*
			09-05		K70408-01		9 1/4	7/8	20T	*	SH5319	SH6190	*
	2359cc	2.4	10		K70557-01 Š		9 1/4	1	23T	*	*	SB60253	DMF91182
INFINITI													
G20													
4	1998cc	2.0	96-91		K70051-01		8 1/2	13/16	18T	*	*	*	*
	2000cc	2.0	02-99		K70051-01		8 1/2	13/16	18T	*	*	SH6212	*
G35													
6	3498cc	3.5	08-07	VQ35HR eng.	*					*	*	SB60301	*
			07-05	VQ35DE eng.	K70358-02		9 7/8	1	24T	*	SH5499	SH6304	*
			04-03		K70358-02		9 7/8	1	24T	*	SH5499	*	*
G37													
6	3696cc	3.7	13-08		*					*	*	SB60301	*
I30													
6	2988cc	3.0	99-96		KF686-01		9 7/16	1	24T	*	SH5353	SH6454	*
Q60													
6	3696cc	3.7	14		*					*	*	SB60301	*
INTERNATIONAL LIGHT TRUCK													
A, AB, AC, AM, B, BC, BCF, FC, R, RA, RM-ENGINES													
4	91"	1.5	61	100", 110", 120", 130" Engine	K0510-01 ◎		10	1 1/4	10T	*	*	*	*
				140", 150", 160" Engine	K0510-01 ◎		10	1 1/4	10T	*	*	*	*
			58-57	100", 110", 120", 130" Engine	K0510-01 ◎		10	1 1/4	10T	*	*	*	*
				140", 150", 160" Engine	K0510-01 ◎		10	1 1/4	10T	*	*	*	*
BD-ENGINES													
6	198"	3.2	83-50		K0508-01 ◎		9 7/8	15/16	10T	*	*	*	*
					K0510-01 ◎		10	1 1/4	10T	*	*	*	*
					K0504-01 ◎	78	11	1 1/4	10T	*	*	*	*
CARGOSTAR													
8	345"	5.7	84-80		K0503-01 ◎		13	1 1/4	10T	*	*	*	*
	392"	6.4	84-83		K0503-01 ◎		13	1 1/4	10T	*	*	*	*
			80		K0503-01 ◎		13	1 1/4	10T	*	*	*	*
	404"	6.6	80		K0503-01 ◎		13	1 1/4	10T	*	*	*	*

◎ Kit Only

* Not Available
Ø Components Available
Š Kit Includes Concentric Slave Cylinder
ƒ Kit Includes Flywheel

© 2014 ZF North American Operations, Inc. All Rights Reserved. No portion of this work may be reproduced or copied by any means without the prior approval of ZF North American Operations, Inc.

SACHS

CLUTCH KIT

Cyl.	CC Cubic Inch	Liter	Year	Application Information	Clutch Kit	Notes Pg.180	Disc Size O.D.	Disc Size I.D.	Disc Size Teeth	PreFilled Master Or System	Master Cylinder	Slave Cylinder	Flywheel
INTERNATIONAL LIGHT TRUCK (Cont'd)													
DT-ENGINES													
6	360"	5.9	92-88	DT360, 466 AND 530 Single Disc, Pull Type, Kit/CB Disc	K70323-01 ◎		14	1 3/4	10T	*	*	*	*
	466"	7.6	07-88	DT360, 466 AND 530 Single Disc, Pull Type, Kit/CB Disc	K70323-01 ◎		14	1 3/4	10T	*	*	*	*
	530"	8.7	05-94	DT360, 466 AND 530 Single Disc, Pull Type, Kit/CB Disc	K70323-01 ◎		14	1 3/4	10T	*	*	*	*
T444E-ENGINES													
8	444"	7.3	03-94	14" Spicer Style Clutch	K0520-01 ◎		13 3/4	1 1/2	10T	*	*	*	*
V-ENGINES													
6	198"	3.2	86-55	14" Clutch	K0509-01 ◎♈		14	1 1/2	10T	*	*	*	*
			83-50	11" Clutch	K0504-01 ◎	78	11	1 1/4	10T	*	*	*	*
ISUZU													
I-MARK													
4	1471cc	1.5	89-87	Turbo	K0074-01 ◎	27	8 1/2	1	14T	*	*	*	*
			89-85	Non-Turbo	K0044-01	27	7 1/4	1	14T	*	*	*	*
	1817cc	1.8	85-81	incl. Diesel	KF583-03		7 7/8	1	24T	*	*	*	*
IMPULSE													
4	1588cc	1.6	92-91	Turbo	K70047-01	27	8 7/8	1	14T	*	*	*	*
			91-90	Non-Turbo	K0110-01	27	7 7/8	1	14T	*	*	*	*
	1817cc	1.8	92		K70047-01	27	8 7/8	1	14T	*	*	*	*
	1949cc	1.9	87-83	2WD	KF637-04		8 1/2	1	24T	*	*	SH6031	NFW4004
	1994cc	2.0	89-85	Turbo	KF654-01		8 7/8	1	24T	*	*	SH6032	*
	2254cc	2.3	89-88	2WD	KF637-04		8 1/2	1	24T	*	*	SH6032	NFW4004
STYLUS													
4	1588cc	1.6	93-91		K0110-01	27	7 7/8	1	14T	*	*	*	*
	1817cc	1.8	92		K70047-01	27	8 7/8	1	14T	*	*	*	*
ISUZU LIGHT TRUCK													
AMIGO													
4	2180cc	2.2	00-98	Isuzu trans., ID No. RMN	KF707-01		9 1/2	1	24T	*	SH5494	SH6226	NFW1006
			99-98	Borg trans.. ID No. MM5	KF707-02		9 1/2	1	24T	*	SH5494	SH6512	NFW1006
	2254cc	2.3	93-89		KF637-01		8 1/2	1	24T	*	SH5025	SH6011	NFW4004
	2559cc	2.6	94-89		KF707-01		9 1/2	1	24T	*	SH5025	SH6011	NFW3621
6	3165cc	3.2	00-98		K70107-01		10 1/4	1	24T	*	SH5494	SH6188	NFW4001
HOMBRE													
4	2180cc	2.2	00-96		K1904-09 ♈		9 1/8	1 1/8	26T	*	SH5171	SH6133WB	NFW1006
				Slave Cylinder w/o Bearing	K1904-09		9 1/8	1 1/8	26T	*	SH5171	SH6133	NFW1006
6	4294cc	4.3	00-99		K70169-01 ♈	9	11	1 1/8	10T	*	SH5171	SH6133WB	NFW1031
				Slave Cylinder w/o Bearing	K70169-01	9	11	1 1/8	10T	*	SH5171	SH6133	NFW1031
				Optional Kit/Non-Predamp Disc	K70169-02		11	1 1/8	10T	*	SH5171	SH6133	NFW1031
			98-97	Cast # 14103283	K70169-01 ♈	9	11	1 1/8	10T	*	SH5171	SH6133WB	NFW1046
				Slave Cylinder w/o Bearing	K70169-01	9	11	1 1/8	10T	*	SH5171	SH6133	NFW1046
				Optional Kit/Non-Predamp Disc	K70169-02		11	1 1/8	10T	*	SH5171	SH6133	NFW1046
				Cast # 10218655	K70169-01 ♈	9	11	1 1/8	10T	*	SH5171	SH6133WB	NFW1031
				Slave Cylinder w/o Bearing	K70169-01	9	11	1 1/8	10T	*	SH5171	SH6133	NFW1031
				Optional Kit/Non-Predamp Disc	K70169-02		11	1 1/8	10T	*	SH5171	SH6133	NFW1031

♈ Slave cylinder includes bearing (not Included in Clutch Kit)
◎ Kit Only
♈ Kit does not include Concentric Slave Cylinder and/or Release Bearing (Sold Separately)

* Not Available
Ø Components Available
Š Kit Includes Concentric Slave Cylinder
ƒ Kit Includes Flywheel

© 2014 ZF North American Operations, Inc. All Rights Reserved. No portion of this work may be reproduced or copied by any means without the prior approval of ZF North American Operations, Inc.

CLUTCH KIT

Cyl.	CC Cubic Inch	Liter	Year	Application Information	Clutch Kit	Notes Pg.180	Disc Size O.D.	Disc Size I.D.	Disc Size Teeth	PreFilled Master Or System	Master Cylinder	Slave Cylinder	Flywheel
ISUZU LIGHT TRUCK (Cont'd)													
I-280													
4	2770cc	2.8	06		K70464-01 Š		9 1/8	1 1/8	26T	*	SH5304	SB60193	*
I-290													
4	2921cc	2.9	08-07		K70464-01 Š		9 1/8	1 1/8	26T	*	SH5304	SB60193	*
PICKUP													
4	1817cc	1.8	82-81	2WD	KF583-03		7 7/8	1	24T	*	*	*	*
				4WD	KF637-01		8 1/2	1	24T	*	*	*	*
	1949cc	1.9	86-83		KF637-01		8 1/2	1	24T	*	*	*	NFW4004
	2238cc	2.2	87-81		KF637-01		8 1/2	1	24T	*	SH5449	*	NFW4004
	2254cc	2.3	95-86		KF637-01		8 1/2	1	24T	*	*	*	NFW4004
	2559cc	2.6	95-88		KF707-01		9 1/2	1	24T	*	SH5025	SH6011	NFW3621
6	3137cc	3.1	94-91		K70046-01		9 5/8	1	24T	*	SH5025	SH6033	NFW1006
RODEO													
4	2180cc	2.2	03-02	(fr. 1/02)	KF707-04		9 1/2	1	24T	*	SH5494	SH6226	NFW1006
			01-00	(to 12/01)	KF707-01		9 1/2	1	24T	*	SH5494	SH6226	NFW1006
			99-98	Isuzu trans.	KF707-02		9 1/2	1	24T	*	SH5494	SH6188	NFW1006
				BW trans.	KF707-02		9 1/2	1	24T	*	SH5494	SH6512	NFW1006
	2559cc	2.6	97-95		KF707-02		9 1/2	1	24T	*	SH5025	SH6188	NFW3621
			94-93		K70107-01	53	10 1/4	1	24T	*	SH5025	*	*
			92-91	Isuzu trans.	KF707-01	53	9 1/2	1	24T	*	SH5025	SH6011	NFW3621
				BW trans.	K1904-01	53	9 1/8	1	14T	*	SH5025	SH6011	NFW1006
6	3137cc	3.1	92-91	RWD, Isuzu trans.	K1904-01	53	9 1/8	1	14T	*	SH5025	SH6011	NFW1009
				4WD, Isuzu trans.	K70046-01	53	9 5/8	1	24T	*	SH5025	SH6033	NFW1009
				RWD & 4WD, BW trans.	K1904-01	53	9 1/8	1	14T	*	SH5025	SH6011	NFW1006
	3165cc	3.2	04-00		K70107-01		10 1/4	1	24T	*	SH5494	SH6188	NFW4001
			99-98	Isuzu trans.	K70107-01		10 1/4	1	24T	*	SH5494	SH6188	NFW4001
				BW trans.	K70107-01		10 1/4	1	24T	*	SH5494	SH6512	NFW4001
			97-93	Isuzu trans., ID No. RMN	K70107-01	53	10 1/4	1	24T	*	SH5025	SH6188	NFW4001
				BW trans., ID No. MM5	KF707-02	53	9 1/2	1	24T	*	SH5025	SH6373	NFW3621
RODEO SPORT													
4	2180cc	2.2	03-02		KF707-04		9 1/2	1	24T	*	SH5494	SH6226	NFW1006
			01		KF707-01		9 1/2	1	24T	*	SH5494	SH6226	NFW1006
6	3165cc	3.2	03-01		K70107-01		10 1/4	1	24T	*	SH5494	SH6188	NFW4001
TROOPER													
4	1949cc	1.9	85-84		KF637-01		8 1/2	1	24T	*	*	*	NFW4004
	2238cc	2.2	87-86		KF637-01		8 1/2	1	24T	*	*	*	NFW4004
			84		KF637-01		8 1/2	1	24T	*	*	*	NFW4004
	2254cc	2.3	87-86		KF637-01		8 1/2	1	24T	*	*	*	NFW4004
	2559cc	2.6	91-88		KF707-01		9 1/2	1	24T	*	SH5034	SH6011	NFW3621
6	2827cc	2.8	91-89		KF708-01		9 1/8	1	24T	*	SH5034	SH6011	NFW1006
	3165cc	3.2	97-92		K70107-01		10 1/4	1	24T	*	SH5025	SH6188	NFW4001
	3475cc	3.5	02-98		K70233-01 ◎		10 7/8	1	24T	*	*	SH6188	*
ISUZU MEDIUM TRUCK													
F													
6	5785cc	5.8	91-90	FSR	K31220-01	2	13 3/4	1 1/2	10T	*	*	*	*
				FTR	K70320-02		11 3/4	1 1/8	21T	*	*	*	*

◎ Kit Only

* Not Available
Ø Components Available
Š Kit Includes Concentric Slave Cylinder
ƒ Kit Includes Flywheel

© 2014 ZF North American Operations, Inc. All Rights Reserved. No portion of this work may be reproduced or copied by any means without the prior approval of ZF North American Operations, Inc.

SACHS

CLUTCH KIT

Cyl.	CC Cubic Inch	Liter	Year	Application Information	Clutch Kit	Notes Pg.180	Disc Size O.D.	Disc Size I.D.	Disc Size Teeth	PreFilled Master Or System	Master Cylinder	Slave Cylinder	Flywheel
ISUZU MEDIUM TRUCK (Cont'd)													
N													
4	3867cc	3.9	97-92	NPR	K70320-02	28	11 3/4	1 1/8	21T	*	SH5397	SH6388	*
			91-86	Turbo	K70320-01	28	11 3/4	1	24T	*	SH5397	SH6388	*
JAGUAR													
S-TYPE													
6	2999cc	3.0	04-03		*					*	SH5241	SB60138	*
X-TYPE													
6	2492cc	2.5	05-02		*					*	*	SB60092	*
	2999cc	3.0	05-03		*					*	*	SB60092	*
JEEP													
CHEROKEE													
4	150"	2.5	00		K1914-07		9 1/8	1	14T	*	SH5177	SH6061	NFW2005
			99-97		K1914-07		9 1/8	1	14T	SPH009	SH5177	SH6061	NFW2005
			96-94		K1914-07	48	9 1/8	1	14T	SPH011	SH5033	SH6061	NFW2005
			93		K1914-06 Š	52	9 1/8	1	14T	SPH009	SH5033	SB60054	NFW2005
			92-91		K1914-03 Š	52	9 1/8	1	14T	*	SH5033	SN1750	NFW2005
			90-87		K1914-03 Š	52	9 1/8	1	14T	*	SH5006	SN1750	*
			86-85	5 Spd.	K1914-02		9 1/8	1	14T	*	SH5021	SH6016	*
6	173"	2.8	86-85		K1904-04	9	9 1/8	1	14T	*	SH5022	SH6016	*
				Optional Kit/Non-Cam Hub Disc	K1904-02		9 1/8	1	14T	*	SH5022	SH6016	*
	242"	4.0	01-00		K1890-05		10 1/2	1 1/8	10T	SPH010	SH5177	SH6061	NFW2003
				Optional Kit/CB Disc	K1890-05CB		10 1/2	1 1/8	10T	SPH010	SH5177	SH6061	NFW2003
			99-97		K1890-05		10 1/2	1 1/8	10T	SPH009	SH5177	SH6061	NFW2003
				Optional Kit/CB Disc	K1890-05CB		10 1/2	1 1/8	10T	SPH009	SH5177	SH6061	NFW2003
			96-94		K1890-05	48	10 1/2	1 1/8	10T	SPH011	SH5033	SH6061	NFW2003
				Optional Kit/CB Disc	K1890-05CB	48	10 1/2	1 1/8	10T	SPH011	SH5033	SH6061	NFW2003
			93		K1890-04 Š	52	10 1/2	1 1/8	10T	*	SH5033	SB60054	NFW2003
				Optional Kit/CB Disc	K1890-04CB Š	52	10 1/2	1 1/8	10T	*	SH5033	SB60054	NFW2003
			92		K1890-03 Š	52	10 1/2	1 1/8	10T	*	SH5033	SB60053	NFW2003
				Optional Kit/CB Disc	K1890-03CB Š	52	10 1/2	1 1/8	10T	*	SH5033	SB60053	NFW2003
			91		K1675-23 Š	52	10 1/2	1 1/8	10T	*	SH5033	SB60053	NFW2003
				Optional Kit/CB Disc	K1675-23CB Š	52	10 1/2	1 1/8	10T	*	SH5033	SB60053	NFW2003
			90-89	Aisin AX15 trans.	K1675-23 Š	52	10 1/2	1 1/8	10T	*	SH5006	SB60053	NFW2006
				Optional Kit/CB Disc	K1675-23CB Š	52	10 1/2	1 1/8	10T	*	SH5006	SB60053	NFW2006
			89-87	Peugeot BA 10/5 trans.	K1675-22 Š	52	10 1/2	1 1/8	10T	*	SH5006	SN1751	NFW2006
				Optional Kit/CB Disc	K1675-22CB Š	52	10 1/2	1 1/8	10T	*	SH5006	SN1751	NFW2006
	258"	4.2	77-74		K1510-04	2	10 1/2	1 1/8	10T	*	*	*	*
				Optional Kit/Diaph. Cover	K1675-08		10 1/2	1 1/8	10T	*	*	*	*
8	360"	5.9	83-80		K1858-07	2	11	1 1/8	10T	*	SH5374	SH6364	*
CJ SERIES													
4	134"	2.2	68-66		K5317-02	2	8 1/2	15/16	10T	*	*	*	*
			60-59		K5317-02	2	8 1/2	15/16	10T	*	*	*	*
	150"	2.5	86	5 Spd.	K1914-02		9 1/8	1	14T	*	SH5374	SH6016	*
	151"	2.5	83-80	GM eng.	K1878-03		9 1/8	1 1/8	10T	*	*	*	*
6	225"	3.7	71-66		K1874-03		10 1/2	1 1/8	10T	*	*	*	*
	232"	3.8	78-76		K1510-01	2	10 1/2	1 1/16	10T	*	*	*	*
				Optional Kit/Diaph. Cover	K1675-06		10 1/2	1 1/16	10T	*	*	*	*

* Not Available
Ø Components Available
Š Kit Includes Concentric Slave Cylinder
ƒ Kit Includes Flywheel

© 2014 ZF North American Operations, Inc. All Rights Reserved. No portion of this work may be reproduced or copied by any means without the prior approval of ZF North American Operations, Inc.

CLUTCH KIT

Cyl.	CC Cubic Inch	Liter	Year	Application Information	Clutch Kit	Notes Pg.180	Disc Size O.D.	Disc Size I.D.	Disc Size Teeth	PreFilled Master Or System	Master Cylinder	Slave Cylinder	Flywheel
JEEP (Cont'd)													
CJ SERIES (Cont'd)													
6	232"	3.8	75-72		K1675-08		10 1/2	1 1/8	10T	*	*	*	*
	258"	4.2	86-82		K1675-13		10 1/2	1 1/8	10T	*	SH5374	SH6364	NFW2001
			81-80		K1510-03	2	10 1/2	1 1/8	10T	*	SH5374	SH6364	NFW2001
				Optional Kit/Diaph. Cover	K1675-13		10 1/2	1 1/8	10T	*	SH5374	SH6364	NFW2001
			79-76		K1510-01	2	10 1/2	1 1/16	10T	*	*	*	NFW2001
				Optional Kit/Diaph. Cover	K1675-06		10 1/2	1 1/16	10T	*	*	*	NFW2001
			75-72		K1675-08		10 1/2	1 1/8	10T	*	*	*	*
8	304"	5.0	81-80		K1510-03	2	10 1/2	1 1/8	10T	*	SH5374	SH6364	*
				Optional Kit/Diaph. Cover	K1675-13		10 1/2	1 1/8	10T	*	SH5374	SH6364	*
			79-76		K1510-01	2	10 1/2	1 1/16	10T	*	*	*	*
				Optional Kit/Diaph. Cover	K1675-06		10 1/2	1 1/16	10T	*	*	*	*
			75-72		K1510-04	2	10 1/2	1 1/8	10T	*	*	*	*
				Optional Kit/Diaph. Cover	K1675-08		10 1/2	1 1/8	10T	*	*	*	*
COMANCHE													
4	126"	2.1	87-86		*					*	SH5022	SH6016	*
	150"	2.5	92-91		K1914-03 Š	52	9 1/8	1	14T	*	SH5033	SN1750	NFW2005
			90-87		K1914-03 Š	52	9 1/8	1	14T	*	SH5006	SN1750	*
			86	5 Spd.	K1914-02		9 1/8	1	14T	*	SH5022	SH6016	*
6	173"	2.8	86		K1904-04	9	9 1/8	1	14T	*	SH5022	SH6016	*
				Optional Kit/Non-Cam Hub Disc	K1904-02		9 1/8	1	14T	*	SH5022	SH6016	*
	242"	4.0	92-91		K1675-23 Š	52	10 1/2	1 1/8	10T	*	SH5033	SB60053	NFW2003
				Optional Kit/CB Disc	K1675-23CB Š	52	10 1/2	1 1/8	10T	*	SH5033	SB60053	NFW2003
			90-89	Aisin AX15 trans.	K1675-23 Š	52	10 1/2	1 1/8	10T	*	SH5006	SB60053	NFW2006
				Optional Kit/CB Disc	K1675-23CB Š	52	10 1/2	1 1/8	10T	*	SH5006	SB60053	NFW2006
			89-87	Peugeot BA 10/5 trans.	K1675-22 Š	52	10 1/2	1 1/8	10T	*	SH5006	SN1751	NFW2006
				Optional Kit/CB Disc	K1675-22CB Š	52	10 1/2	1 1/8	10T	*	SH5006	SN1751	NFW2006
COMPASS													
4	122"	2.0	14-10		K70812-01 ƒ Š◎		8 7/8	13/16	17T	*	SH5544	SB60300	*
	144"	2.4	13-07		K70813-01 ƒ Š◎	10	9	7/8	17T	*	SH5544	SB60300	*
DISPATCHER													
4	134"	2.2	67-61		K5317-02	2	8 1/2	15/16	10T	*	*	*	*
6	225"	3.7	67-66		K1874-03		10 1/2	1 1/8	10T	*	*	*	*
DJ SERIES													
4	134"	2.2	68-67		K5317-02	2	8 1/2	15/16	10T	*	*	*	*
			60-59		K5317-02	2	8 1/2	15/16	10T	*	*	*	*
6	225"	3.7	71-66		K1874-03		10 1/2	1 1/8	10T	*	*	*	*
	232"	3.8	74-72		K1675-08		10 1/2	1 1/8	10T	*	*	*	*
	258"	4.2	74-73		K1675-08		10 1/2	1 1/8	10T	*	*	*	*
8	304"	5.0	74		K1510-04	2	10 1/2	1 1/8	10T	*	*	*	*
				Optional Kit/Diaph. Cover	K1675-08		10 1/2	1 1/8	10T	*	*	*	*
GLADIATOR													
6	232"	3.8	67-64		K1510-04	2	10 1/2	1 1/8	10T	*	*	*	*
				Optional Kit/Diaph. Cover	K1675-08		10 1/2	1 1/8	10T	*	*	*	*
8	327"	5.3	67-65		K1510-04	2	10 1/2	1 1/8	10T	*	*	*	*
				Optional Kit/Diaph. Cover	K1675-08		10 1/2	1 1/8	10T	*	*	*	*

◎ Kit Only

* Not Available
Ø Components Available
Š Kit Includes Concentric Slave Cylinder
ƒ Kit Includes Flywheel

© 2014 ZF North American Operations, Inc. All Rights Reserved. No portion of this work may be reproduced or copied by any means without the prior approval of ZF North American Operations, Inc.

SACHS

CLUTCH KIT

Cyl.	CC Cubic Inch	Liter	Year	Application Information	Clutch Kit	Notes Pg.180	Disc Size O.D.	Disc Size I.D.	Disc Size Teeth	PreFilled Master Or System	Master Cylinder	Slave Cylinder	Flywheel
JEEP (Cont'd)													
GRAND CHEROKEE													
6	242"	4.0	94		K1890-05	52	10 1/2	1 1/8	10T	*	SH5176	SH6455	NFW2003
				Optional Kit/CB Disc	K1890-05CB	52	10 1/2	1 1/8	10T	*	SH5176	SH6455	NFW2003
			93		K1890-04 Š	52	10 1/2	1 1/8	10T	*	SH5176	SB60054	NFW2003
				Optional Kit/CB Disc	K1890-04CB Š	52	10 1/2	1 1/8	10T	*	SH5176	SB60054	NFW2003
GRAND WAGONEER													
6	258"	4.2	86		K1675-13		10 1/2	1 1/8	10T	*	SH5374	SH6364	NFW2001
8	360"	5.9	88-84		K1858-07	2	11	1 1/8	10T	*	SH5374	SH6364	*
J SERIES													
6	232"	3.8	72-64		K1510-04	2	10 1/2	1 1/8	10T	*	*	*	*
				Optional Kit/Diaph. Cover	K1675-08		10 1/2	1 1/8	10T	*	*	*	*
			70-66	Military truck, 2406, 3406	K1675-08		10 1/2	1 1/8	10T	*	*	*	*
	258"	4.2	85-82		K1675-13		10 1/2	1 1/8	10T	*	*	*	NFW2001
			77-74		K1510-04	2	10 1/2	1 1/8	10T	*	*	*	NFW2001
				Optional Kit/Diaph. Cover	K1675-08		10 1/2	1 1/8	10T	*	*	*	NFW2001
			73-71		K1675-08		10 1/2	1 1/8	10T	*	*	*	*
8	327"	5.3	68-65		K1510-04	2	10 1/2	1 1/8	10T	*	*	*	*
				Optional Kit/Diaph. Cover	K1675-08		10 1/2	1 1/8	10T	*	*	*	*
	360"	5.9	88-80		K1858-07	2	11	1 1/8	10T	*	SH5374	SH6364	*
JEEPSTER													
4	134"	2.2	68-67		K5317-02	2	8 1/2	15/16	10T	*	*	*	*
6	225"	3.7	71-66		K1874-03		10 1/2	1 1/8	10T	*	*	*	*
	258"	4.2	73-72		K1675-08		10 1/2	1 1/8	10T	*	*	*	*
LIBERTY													
4	148"	2.4	05		K70342-02	60	9	1	10T	SPH065	SH5320	SH6469	DMF91114
			04-02		K70297-01	60	9	1	19T	SPH065	SH5237	SH6230	DMF91114
6	226"	3.7	08		K70498-01	14	10 3/8	1 1/8	10T	*	*	SH6520	*
			07-05	Rigid Disc	K70498-01	14	10 3/8	1 1/8	10T	SPH067	SH5320	SH6469	*
			04-02	Sprung Disc	K70298-01		10 3/8	1 1/8	10T	SPH066	SH5237	SH6230	*
PATRIOT													
4	122"	2.0	14-10		K70812-01 ƒ Š◎		8 7/8	13/16	17T	*	SH5544	SB60300	*
	144"	2.4	14-07		K70813-01 ƒ Š◎	10	9	7/8	17T	*	SH5544	SB60300	*
SCRAMBLER													
4	151"	2.5	83-81	GM eng.	K1878-03		9 1/8	1 1/8	10T	*	*	*	*
WAGONEER													
4	150"	2.5	87		K1914-03 Š	52	9 1/8	1	14T	*	SH5006	SN1750	*
			86	5 Spd.	K1914-02		9 1/8	1	14T	*	SH5022	SH6016	*
6	173"	2.8	86-85		K1904-04	9	9 1/8	1	14T	*	SH5022	SH6016	*
				Optional Kit/Non-Cam Hub Disc	K1904-02		9 1/8	1	14T	*	SH5022	SH6016	*
	232"	3.8	71-65		K1510-04	2	10 1/2	1 1/8	10T	*	*	*	*
				Optional Kit/Diaph. Cover	K1675-08		10 1/2	1 1/8	10T	*	*	*	*
	242"	4.0	90-89	Aisin AX15 trans.	K1675-23 Š	52	10 1/2	1 1/8	10T	*	SH5006	SB60053	NFW2006
				Optional Kit/CB Disc	K1675-23CB Š	52	10 1/2	1 1/8	10T	*	SH5006	SB60053	NFW2006
			89-87	Peugeot BA 10/5 trans.	K1675-22 Š	52	10 1/2	1 1/8	10T	*	SH5006	SN1751	NFW2006
				Optional Kit/CB Disc	K1675-22CB Š	52	10 1/2	1 1/8	10T	*	SH5006	SN1751	NFW2006

◎ Kit Only

* Not Available
Ø Components Available
Š Kit Includes Concentric Slave Cylinder
ƒ Kit Includes Flywheel

© 2014 ZF North American Operations, Inc. All Rights Reserved. No portion of this work may be reproduced or copied by any means without the prior approval of ZF North American Operations, Inc.

CLUTCH KIT

Cyl.	CC Cubic Inch	Liter	Year	Application Information	Clutch Kit	Notes Pg.180	Disc Size O.D.	Disc Size I.D.	Disc Size Teeth	PreFilled Master Or System	Master Cylinder	Slave Cylinder	Flywheel
JEEP (Cont'd)													
WAGONEER (Cont'd)													
6	258"	4.2	73-72		K1510-04	2	10 1/2	1 1/8	10T	*	*	*	*
				Optional Kit/Diaph. Cover	K1675-08		10 1/2	1 1/8	10T	*	*	*	*
8	327"	5.3	67-65		K1510-04	2	10 1/2	1 1/8	10T	*	*	*	*
				Optional Kit/Diaph. Cover	K1675-08		10 1/2	1 1/8	10T	*	*	*	*
	360"	5.9	83-80		K1858-07	2	11	1 1/8	10T	*	SH5374	SH6364	*
WRANGLER													
4	148"	2.4	06-05		K70342-02	60	9	1	10T	SPH062	SH5177	SH6230	DMF91170
			04-03		K70342-01	60	9	1	19T	*	SH5177	SH6061	DMF91114
	150"	2.5	02-97		K1914-07		9 1/8	1	14T	SPH009	SH5177	SH6061	NFW2005
			95-94		K1914-07	48	9 1/8	1	14T	SPH012	SH5009	SH6061	NFW2005
			93		K1914-06 Š	52	9 1/8	1	14T	*	SH5009	SB60054	NFW2005
			92-91		K1914-03 Š	52	9 1/8	1	14T	*	SH5009	SN1750	NFW2005
			90-87		K1914-03 Š	52	9 1/8	1	14T	*	SH5013	SN1750	*
6	220"	3.6	14-12		K70630-01 ◎		11	1 1/8	10T	*	SH5501	SH6520	*
	231"	3.8	11-07		K70608-01 ◎		10 3/8	1 1/8	10T	*	SH5501	SH6520	NFW9136
	242"	4.0	06-05		K1890-05		10 1/2	1 1/8	10T	SPH062	SH5177	SH6230	*
				Optional Kit/CB Disc	K1890-05CB		10 1/2	1 1/8	10T	SPH062	SH5177	SH6230	*
			04-00		K1890-05		10 1/2	1 1/8	10T	SPH048	SH5177	SH6061	NFW2003
				Optional Kit/CB Disc	K1890-05CB		10 1/2	1 1/8	10T	SPH048	SH5177	SH6061	NFW2003
			99-97		K1890-05		10 1/2	1 1/8	10T	SPH043	SH5177	SH6061	NFW2003
				Optional Kit/CB Disc	K1890-05CB		10 1/2	1 1/8	10T	SPH043	SH5177	SH6061	NFW2003
			95-94		K1890-05	48	10 1/2	1 1/8	10T	SPH012	SH5009	SH6061	NFW2003
				Optional Kit/CB Disc	K1890-05CB	48	10 1/2	1 1/8	10T	SPH012	SH5009	SH6061	NFW2003
			93		K1890-04 Š	52	10 1/2	1 1/8	10T	*	SH5009	SB60054	NFW2003
				Optional Kit/CB Disc	K1890-04CB Š	52	10 1/2	1 1/8	10T	*	SH5009	SB60054	NFW2003
			92		K1890-03 Š	52	10 1/2	1 1/8	10T	*	SH5009	SB60053	NFW2003
				Optional Kit/CB Disc	K1890-03CB Š	52	10 1/2	1 1/8	10T	*	SH5009	SB60053	NFW2003
			91		K1675-23 Š	52	10 1/2	1 1/8	10T	*	SH5009	SB60053	NFW2003
				Optional Kit/CB Disc	K1675-23CB Š	52	10 1/2	1 1/8	10T	*	SH5009	SB60053	NFW2003
	258"	4.2	90-89	Aisin AX15 trans.	K1675-23 Š	52	10 1/2	1 1/8	10T	*	SH5013	SB60053	NFW2006
				Optional Kit/CB Disc	K1675-23CB Š	52	10 1/2	1 1/8	10T	*	SH5013	SB60053	NFW2006
			89-87	Peugeot BA 10/5 trans.	K1675-22 Š	52	10 1/2	1 1/8	10T	*	SH5013	SN1751	NFW2006
				Optional Kit/CB Disc	K1675-22CB Š	52	10 1/2	1 1/8	10T	*	SH5013	SN1751	NFW2006
KIA													
FORTE													
4	1797cc	1.8	14		*					*	*	SH6503	*
	1998cc	2.0	13-10		K70604-01		9 1/4	7/8	20T	*	*	SH6503	*
	2359cc	2.4	12-10		K70557-01 Š		9 1/4	1	23T	*	*	SB60253	DMF91182
FORTE KOUP													
4	1998cc	2.0	13-10		K70604-01		9 1/4	7/8	20T	*	*	SH6503	*
	1999cc	2.0	14		*					*	*	SH6503	*
	2359cc	2.4	13-10		K70557-01 Š		9 1/4	1	23T	*	*	SB60253	DMF91182
MAGENTIS (CANADA ONLY)													
4	2351cc	2.4	06-01		K70292-01	60	8 7/8	13/16	20T	*	SH5229	SH6190	DMF91129

◎ Kit Only

* Not Available
Ø Components Available
Š Kit Includes Concentric Slave Cylinder
ƒ Kit Includes Flywheel

© 2014 ZF North American Operations, Inc. All Rights Reserved. No portion of this work may be reproduced or copied by any means without the prior approval of ZF North American Operations, Inc.

SACHS

CLUTCH KIT

Cyl.	CC Cubic Inch	Liter	Year	Application Information	Clutch Kit	Notes Pg.180	Disc Size O.D.	Disc Size I.D.	Disc Size Teeth	PreFilled Master Or System	Master Cylinder	Slave Cylinder	Flywheel
KIA (Cont'd)													
OPTIMA													
4	2351cc	2.4	06-01	8th Digit of VIN # 6	K70292-01	60	8 7/8	13/16	20T	*	SH5229	SH6190	DMF91129
				Optional Kit w/ Solid Flywheel	K70449-01 ƒ◎		8 7/8	13/16	20T	*	SH5229	SH6190	*
	2359cc	2.4	12-11		*					*	*	SB60253	*
			10-09		K70557-01 Š	60	9 1/4	1	23T	*	SH5516	SB60253	DMF91182
			08-06	8th Digit of VIN # 3	K70508-01 Š◎	60	9 1/4	1 1/16	23T	*	SH5516	SB60253	*
RIO													
4	1493cc	1.5	02-01		K70317-01		7 7/8	7/8	20T	*	*	*	*
	1591cc	1.6	14-12		K70634-01		8 1/2	57/64	20T	*	*	SH6503	*
	1594cc	1.6	05-03		K70317-01		7 7/8	7/8	20T	*	*	*	*
	1599cc	1.6	11-06		K70304-01 ◎		8 1/2	7/8	20T	*	*	SH6503	NFW9146
RIO5													
4	1591cc	1.6	12		K70634-01		8 1/2	57/64	20T	*	*	SH6503	*
	1599cc	1.6	11-06		K70304-01 ◎		8 1/2	7/8	20T	*	*	SH6503	NFW9146
SEPHIA													
4	1597cc	1.6	97-94		KF759-02		7 7/8	7/8	20T	*	*	*	NFW4713
	1793cc	1.8	01-98		K70180-01		8 7/8	15/16	22T	*	SH5386	SH6200	*
	1839cc	1.8	97-95		K70180-01		8 7/8	15/16	22T	*	*	SH6200	*
SPECTRA													
4	1793cc	1.8	04-00		K70180-01		8 7/8	15/16	22T	*	SH5386	SH6200	*
	1975cc	2.0	09-07		K70409-01		8 1/2	7/8	20T	*	SH5528	SH6190	NFW9124
			06-04		K70409-01		8 1/2	7/8	20T	*	*	SH6190	NFW9124
SPECTRA5													
4	1975cc	2.0	09-07		K70409-01		8 1/2	7/8	20T	*	SH5528	SH6190	NFW9124
			06-05		K70409-01		8 1/2	7/8	20T	*	*	SH6190	NFW9124
KIA LIGHT TRUCK													
SORENTO													
4	2359cc	2.4	11		K70642-01 Š		9 29/64	1	23T	*	*	SB60253	*
6	3497cc	3.5	06-04		K70396-01 ◎		9 1/2	1	23T	*	*	*	*
SOUL													
4	1591cc	1.6	14-10	Base	K70634-01		8 1/2	57/64	20T	*	*	*	*
	1975cc	2.0	11-10		K70510-01		8 1/2	7/8	20T	*	SH5509	*	NFW9138
	1999cc	2.0	13-12	+	K70604-01		9 1/4	7/8	20T	*	*	*	*
SPORTAGE													
4	1975cc	2.0	10-09		*					*	SH5319	SH6190	*
			08-05		K70408-01		9 1/4	7/8	20T	*	SH5319	SH6190	*
	1998cc	2.0	02-98		K70180-01		8 7/8	15/16	22T	*	SH5239	SH6201	*
			97-95		K70180-01		8 7/8	15/16	22T	*	SH5340	SH6201	*
	2359cc	2.4	13-11		K70557-01 Š		9 1/4	1	23T	*	*	SB60253	DMF91182
LAMBORGHINI													
DIABLO													
12	5700cc	5.7	95-91		K70215-01		9 7/8	1 1/8	10T	*	*	*	*
LAND ROVER													
DEFENDER													
8	3947cc	3.9	95-93		K70209-01		10 1/2	1	23T	*	*	*	*

◎ Kit Only

* Not Available
Ø Components Available
Š Kit Includes Concentric Slave Cylinder
ƒ Kit Includes Flywheel

© 2014 ZF North American Operations, Inc. All Rights Reserved. No portion of this work may be reproduced or copied by any means without the prior approval of ZF North American Operations, Inc.

CLUTCH KIT

Cyl.	CC Cubic Inch	Liter	Year	Application Information	Clutch Kit	Notes Pg.180	Disc Size O.D.	Disc Size I.D.	Disc Size Teeth	PreFilled Master Or System	Master Cylinder	Slave Cylinder	Flywheel
LAND ROVER (Cont'd)													
DISCOVERY													
8	3950cc	3.9	95-94		K70210-01 ◎		10 1/2	1	23T	*	*	*	*
		4.0	98-96		K70210-01 ◎		10 1/2	1	23T	*	*	*	*
RANGE ROVER													
8	3528cc	3.5	72-71		KF431-01		7 1/2	1 1/8	10T	*	*	*	*
LEXUS													
ES250													
6	2508cc	2.5	91-90		KF718-02		9 1/4	1 1/8	21T	*	SH5037	SH6036	*
ES300													
6	2959cc	3.0	93-92		KF718-02		9 1/4	1 1/8	21T	*	SH5071	SH6036	*
IS250													
6	2499cc	2.5	12-06		K70610-01		9 5/16	1 3/16	21T	*	*	*	*
IS300													
6	2997cc	3.0	05-02		K70062-04		9 3/8	1 1/8	21T	*	*	SH6036	*
SC300													
6	2997cc	3.0	97-95		K70062-01		9 1/4	1 1/8	21T	*	*	SH6430	NFW9137
			94-92		K70062-01		9 1/4	1 1/8	21T	*	*	SH6430	*
LINCOLN													
LS													
6	182"	3.0	02-01	(fr. 3/1/01)	K70549-01 Š		9 5/16	1 1/8	10T	*	SH5241	SB60138	*
			01-00	(to 3/1/01)	K70299-01 Š		9 5/16	1 1/8	10T	*	SH5241	SB60138	*
MG													
MAGNETTE													
4	1489cc	1.5	61		KF330-01 ◎		8	1	23T	*	*	SH6362	*
	1622cc	1.6	62		KF330-01 ◎		8	1	23T	*	*	SH6362	*
MGA													
4	1590cc	1.6	62-61		KF330-01 ◎		8	1	23T	*	*	SH6362	*
MGB													
4	1798cc	1.8	74-68	GT	KF330-01 ◎		8	1	23T	*	SH5383	SH6362	*
			67-63	GT	KF330-01 ◎		8	1	23T	*	*	SH6362	*
MIDGET													
4	1493cc	1.5	79-75		KF322-02 ◎		7 1/4	7/8	20T	*	*	*	*
MAZDA													
COSMO													
R	1308cc	1.3	78-76		KF573-02		8 1/2	15/16	22T	*	SH5075	*	*
GLC													
4	1272cc	1.3	78-77		KF586-03		7 1/4	7/8	20T	*	*	*	*
	1415cc	1.4	80-79		KF586-03		7 1/4	7/8	20T	*	*	*	*
	1490cc	1.5	85-81		KF605-01		7 1/2	7/8	20T	*	*	*	*
MIATA													
4	1597cc	1.6	93-90	(fr. Serial #11970)	KF710-01		7 7/8	15/16	22T	*	SH5074	SH6064	NFW4713
			90	(to Serial # 111969)	KF710-01		7 7/8	15/16	22T	*	SH5074	SH6070	NFW4713
	1839cc	1.8	05-04	Turbo	K70138-01		8 1/2	15/16	22T	*	*	SH6064	*
			05-99	Non-Turbo	K70138-01		8 1/2	15/16	22T	*	SH5074	SH6064	*
			97-94		K70138-01		8 1/2	15/16	22T	*	SH5074	SH6064	*

◎ Kit Only

* Not Available
Ø Components Available
Š Kit Includes Concentric Slave Cylinder
ƒ Kit Includes Flywheel

© 2014 ZF North American Operations, Inc. All Rights Reserved. No portion of this work may be reproduced or copied by any means without the prior approval of ZF North American Operations, Inc.

SACHS

CLUTCH KIT

Cyl.	CC Cubic Inch	Liter	Year	Application Information	Clutch Kit	Notes Pg.180	Disc Size O.D.	Disc Size I.D.	Disc Size Teeth	PreFilled Master Or System	Master Cylinder	Slave Cylinder	Flywheel
MAZDA (Cont'd)													
MX-5 MIATA													
4	2000cc	2.0	13-06	5 Spd.	K70050-02		8 1/2	15/16	22T	*	SH5490	SH6463	*
				6 Spd.	K70603-01 ◎		8 1/2	1 1/32	23T	*	SH5490	SH6463	*
MIZER													
4	1272cc	1.3	77-76		KF586-04		7 1/4	7/8	20T	*	SH5073	*	*
MX-3													
4	1597cc	1.6	95-94		KF759-02		7 7/8	7/8	20T	*	SH5242	SH6384	NFW4713
	1600cc	1.6	93-92		KF605-03		7 1/2	7/8	20T	*	SH5242	*	*
6	1845cc	1.8	94		KF638-01		8 7/8	15/16	22T	*	SH5242	*	*
			93-92		KF638-04		8 1/2	15/16	22T	*	SH5242	SH6052	*
MX-3 (CANADA ONLY)													
4	1600cc	1.6	95-94		KF759-02		7 7/8	7/8	20T	*	SH5242	*	NFW4713
			93		KF605-03		7 1/2	7/8	20T	*	SH5242	*	*
6	1845cc	1.8	94		KF638-01		8 7/8	15/16	22T	*	SH5242	*	*
			93-92		KF638-04		8 1/2	15/16	22T	*	SH5242	SH6052	*
MX-6													
4	1991cc	2.0	97-93		K70050-01		8 1/2	15/16	22T	*	SH5054	SH6052	*
	2184cc	2.2	92-88	Non-Turbo	KF638-01		8 7/8	15/16	22T	*	SH5010	SH6005	NFW4702
				Turbo	KF678-03		9 7/16	1 1/16	23T	*	SH5010	SH6053	*
6	2497cc	2.5	97-93		KF638-01		8 7/8	15/16	22T	*	SH5054	SH6052	*
MX-6 (CANADA ONLY)													
4	2184cc	2.2	92-88	Non-Turbo	KF638-01		8 7/8	15/16	22T	*	SH5010	SH6005	NFW4702
				Turbo	KF678-03		9 7/16	1 1/16	23T	*	SH5010	SH6053	*
6	2497cc	2.5	97-93		KF638-01		8 7/8	15/16	22T	*	SH5054	SH6052	*
PROTÉGÉ													
4	1489cc	1.5	98-95		KF759-02		7 7/8	7/8	20T	*	SH5242	SH6384	NFW4713
	1589cc	1.6	01-99		KF759-02		7 7/8	7/8	20T	*	SH5054	SH6384	NFW4713
	1839cc	1.8	00-99		KF759-02		7 7/8	7/8	20T	*	SH5054	SH6384	NFW4713
			98-96		KF759-02		7 7/8	7/8	20T	*	SH5242	SH6384	NFW4713
			95-90	DOHC, FWD	KF638-04		8 1/2	15/16	22T	*	SH5242	SH6050	*
			94-90	SOHC, FWD	KF759-02		7 7/8	7/8	20T	*	*	*	*
			91-90	SOHC, 4WD	KF638-01		8 7/8	15/16	22T	*	SH5242	SH6050	*
	2000cc	2.0	03	Turbo	K70050-01		8 1/2	15/16	22T	*	*	SH6203	*
			03-01	Non-Turbo	K70301-01		8 7/8	15/16	22T	*	SH5054	SH6203	*
PROTÉGÉ5													
4	2000cc	2.0	03-02		K70301-01		8 7/8	15/16	22T	*	SH5054	SH6203	*
RX-2													
R	1146cc	1.1	74-70		KF573-02		8 1/2	15/16	22T	*	*	*	*
RX-3													
R	1146cc	1.1	78-72		KF573-02		8 1/2	15/16	22T	*	SH5073	*	*
RX-4													
R	1308cc	1.3	78-74		KF573-02		8 1/2	15/16	22T	*	SH5075	*	*
RX-7													
R	1146cc	1.1	85-84		KF604-02		8 7/8	15/16	22T	*	SH5076	SH6066	*
			83		KF604-02		8 7/8	15/16	22T	*	SH5017	SH6066	*
			82-79		KF573-01		8 1/2	13/16	22T	*	SH5017	SH6067	*

◎ Kit Only

* Not Available
Ø Components Available
Š Kit Includes Concentric Slave Cylinder
ƒ Kit Includes Flywheel

© 2014 ZF North American Operations, Inc. All Rights Reserved. No portion of this work may be reproduced or copied by any means without the prior approval of ZF North American Operations, Inc.

CLUTCH KIT

Cyl.	CC Cubic Inch	Liter	Year	Application Information	Clutch Kit	Notes Pg.180	Disc Size O.D.	Disc Size I.D.	Disc Size Teeth	PreFilled Master Or System	Master Cylinder	Slave Cylinder	Flywheel
MAZDA (Cont'd)													
RX-7 (Cont'd)													
R	1146cc	1.1	79	(to 2/79)	KF573-06		8 1/2	15/16	22T	*	SH5134	SH6422	*
	1308cc	1.3	95-93		K70115-01 ◎		9 1/4	1	23T	*	SH5077	*	*
			91-89	Non-Turbo	KF714-01		8 7/8	15/16	22T	*	SH5018	SH6019	*
			88-86	Non-Turbo	KF604-02		8 7/8	15/16	22T	*	SH5018	SH6019	*
				Turbo	KF678-03		9 7/16	1 1/16	23T	*	SH5018	*	*
			85-84		KF604-02		8 7/8	15/16	22T	*	*	*	*
RX-8													
R	1308cc	1.3	11-04		K70383-01 ◎		9 5/16	1 1/16	23T	*	SH5273	SH6238	*
2													
4	1498cc	1.5	13-11		*					*	*	SH6525	*
3													
4	2000cc	2.0	13-04		K70397-01		8 7/8	15/16	22T	*	SH5271	SH6237	*
	2260cc	2.3	13-07	Turbo, MazdaSpeed	K70606-01 ◎		9 13/16	1	23T	*	SH5271	*	*
			09-04	Non-Turbo	K70397-01		8 7/8	15/16	22T	*	SH5271	SH6237	*
	2488cc	2.5	13-10	S	K70397-01		8 7/8	15/16	22T	*	*	SH6237	*
5													
4	2260cc	2.3	10-06		K70397-01		8 7/8	15/16	22T	*	SH5271	SH6237	*
	2488cc	2.5	13-12	Sport	*					*	*	SH6237	*
6													
4	2260cc	2.3	08-03	Non-Turbo	K70367-01		8 1/2	15/16	22T	*	SH5242	SH6181	*
			07-06	Turbo, MazdaSpeed	K70606-01 ◎		9 13/16	1	23T	*	SH5525	*	*
	2488cc	2.5	13-09		K70621-01 ◎		9	7/8	22T	*	SH5527	SH6181	*
6	2968cc	3.0	08-03		K70368-01 ◎		9 1/2	1	23T	*	SH5242	SH6181	*
323													
4	1597cc	1.6	94-90		KF605-03		7 1/2	7/8	20T	*	SH5242	*	*
			89-88	Turbo	KF638-01		8 7/8	15/16	22T	*	SH5450	SH6421	*
			89-87	Non-Turbo	KF605-02		7 1/2	7/8	20T	*	*	*	*
			86		KF605-01		7 1/2	7/8	20T	*	*	*	*
616													
4	1586cc	1.6	71		KF576-01		7 7/8	15/16	22T	*	*	SH6062	*
			70		KF576-01		7 7/8	15/16	22T	*	*	SH6072	*
618													
4	1796cc	1.8	72		KF573-07		8 1/2	15/16	22T	*	*	SH6062	*
626													
4	1970cc	2.0	82-81		KF606-01		8 1/2	13/16	22T	*	SH5133	SH6072	*
			80-79		KF606-01		8 1/2	13/16	22T	*	SH5134	SH6072	*
	1991cc	2.0	02-93		K70050-01		8 1/2	15/16	22T	*	SH5054	SH6052	*
	1998cc	2.0	87	Turbo	KF638-01		8 7/8	15/16	22T	*	*	SH6063	NFW4702
			87-84	Non-Turbo, Gas	KF638-01		8 7/8	15/16	22T	*	*	*	NFW4702
			85-84	Non-Turbo, Diesel	KF638-01		8 7/8	15/16	22T	*	SH5132	SH6063	*
	2184cc	2.2	92-88	Non-Turbo	KF638-01		8 7/8	15/16	22T	*	SH5010	SH6005	NFW4702
			91-88	Turbo	KF678-03		9 7/16	1 1/16	23T	*	SH5010	SH6053	*
6	2497cc	2.5	02-93		KF638-01		8 7/8	15/16	22T	*	SH5054	SH6052	*
808													
4	1587cc	1.6	77-72		KF576-01		7 7/8	15/16	22T	*	SH5073	SH6072	*

◎ Kit Only

* Not Available
Ø Components Available
Š Kit Includes Concentric Slave Cylinder
ƒ Kit Includes Flywheel

© 2014 ZF North American Operations, Inc. All Rights Reserved. No portion of this work may be reproduced or copied by any means without the prior approval of ZF North American Operations, Inc.

SACHS

CLUTCH KIT

Cyl.	CC Cubic Inch	Liter	Year	Application Information	Clutch Kit	Notes Pg.180	Disc Size O.D.	Disc Size I.D.	Disc Size Teeth	PreFilled Master Or System	Master Cylinder	Slave Cylinder	Flywheel
MAZDA (Cont'd)													
929													
6	2954cc	3.0	89		KF678-03		9 7/16	1 1/16	23T	*	*	SH6064	*
1200													
4	1169cc	1.2	71		KF586-04		7 1/4	7/8	20T	*	*	*	*
1800													
4	1796cc	1.8	71		KF573-07		8 1/2	15/16	22T	*	*	*	*
MAZDA LIGHT TRUCK & VAN													
B1600													
4	1586cc	1.6	76		KF576-01		7 7/8	15/16	22T	*	SH5135	SH6072	*
			75-72		KF576-01		7 7/8	15/16	22T	*	SH5136	SH6026	*
B1800													
4	1796cc	1.8	78-77		KF573-02		8 1/2	15/16	22T	*	SH5137	SH6072	*
B2000													
4	1970cc	2.0	84-79		KF573-06		8 1/2	15/16	22T	*	SH5102	SH6072	*
	1998cc	2.0	87-86		KF638-01		8 7/8	15/16	22T	*	SH5002	SH6002	NFW4702
B2200													
4	2184cc	2.2	93-87		KF638-01		8 7/8	15/16	22T	*	SH5002	SH6002	NFW4702
	2209cc	2.2	84-82	Diesel	KF604-04		8 7/8	15/16	22T	*	SH5102	*	*
B2300													
4	2294cc	2.3	01	O.E. Self Adjusting Kit	K70154-04 ⚲◎		9	1	23T	SPM012	SH5184	SH6161WB	*
				Optional Kit/O.E. Self Adjusting w/o Bearing	K70154-04		9	1	23T	SPM012	SH5184	SH6161	*
	2295cc	2.3	97-95	O.E. Self Adjusting Kit	K70154-04 ⚲◎		9	1	23T	SPM009	SH5139	SH6024WB	NFW1145
				Optional Kit/O.E. Self Adjusting w/o Bearing	K70154-04		9	1	23T	SPM009	SH5139	SH6024	NFW1145
			94		K0047-07 ⚲		8 7/8	1	23T	SPM007	SH5063	SH6024WB	NFW1101
				Slave Cylinder w/o Bearing	K0047-07		8 7/8	1	23T	SPM007	SH5063	SH6024	NFW1101
	2300cc	2.3	09-02	O.E. Self Adjusting Kit	K70154-04 ⚲◎		9	1	23T	SPM012	SH5184	SH6161WB	*
				Optional Kit/O.E. Self Adjusting w/o Bearing	K70154-04		9	1	23T	SPM012	SH5184	SH6161	*
B2500													
4	2492cc	2.5	01-00	O.E. Self Adjusting Kit	K70154-04 ⚲◎		9	1	23T	SPM011	SH5184	SH6161WB	NFW1145
				Optional Kit/O.E. Self Adjusting w/o Bearing	K70154-04		9	1	23T	SPM011	SH5184	SH6161	NFW1145
			99-98	O.E. Self Adjusting Kit	K70154-04 ⚲◎		9	1	23T	SPM011	SH5184	SH6024WB	NFW1145
				Optional Kit/O.E. Self Adjusting w/o Bearing	K70154-04		9	1	23T	SPM011	SH5184	SH6024	NFW1145
B2600													
4	2555cc	2.6	88-87		KF678-03		9 7/16	1 1/16	23T	*	SH5002	SH6124	*
	2606cc	2.6	93-89		K70059-02		9 7/8	1	23T	*	SH5002	SH6020	*
B3000													
6	2954cc	3.0	07-01	O.E. Self Adjusting Kit	K70154-04 ⚲◎		9	1	23T	SPM012	SH5184	SH6161WB	NFW1152
				Optional Kit/O.E. Self Adjusting w/o Bearing	K70154-04		9	1	23T	SPM012	SH5184	SH6161	NFW1152
			00-98	O.E. Self Adjusting Kit	K70154-04 ⚲◎		9	1	23T	SPM010	SH5184	SH6024WB	NFW1152
				Optional Kit/O.E. Self Adjusting w/o Bearing	K70154-04		9	1	23T	SPM010	SH5184	SH6024	NFW1152

⚲ Slave cylinder includes bearing (not Included in Clutch Kit)
◎ Kit Only

* Not Available
Ø Components Available
Š Kit Includes Concentric Slave Cylinder
ƒ Kit Includes Flywheel

© 2014 ZF North American Operations, Inc. All Rights Reserved. No portion of this work may be reproduced or copied by any means without the prior approval of ZF North American Operations, Inc.

CLUTCH KIT

Cyl.	CC Cubic Inch	Liter	Year	Application Information	Clutch Kit	Notes Pg.180	Disc Size O.D.	Disc Size I.D.	Disc Size Teeth	PreFilled Master Or System	Master Cylinder	Slave Cylinder	Flywheel
MAZDA LIGHT TRUCK & VAN (Cont'd)													
B3000 (Cont'd)													
6	2983cc	3.0	96-95	O.E. Self Adjusting Kit	K70154-04 ⚲◎		9	1	23T	SPM008	SH5139	SH6024WB	NFW1152
				Optional Kit/O.E. Self Adjusting w/o Bearing	K70154-04		9	1	23T	SPM008	SH5139	SH6024	NFW1152
			94		K0047-07 ⚲		8 7/8	1	23T	SPM007	SH5063	SH6024WB	NFW1115
				Slave Cylinder w/o Bearing	K0047-07		8 7/8	1	23T	SPM007	SH5063	SH6024	NFW1115
B4000													
6	4016cc	4.0	09-01		K70313-01 ⚲		10 1/8	1	23T	SPM012	SH5184	SH6161WB	NFW1182
				Slave Cylinder w/o Bearing	K70313-01		10 1/8	1	23T	SPM012	SH5184	SH6161	NFW1182
			00-98		K70251-01 ⚲		10 1/8	1	23T	SPM010	SH5184	SH6024WB	*
			97-95		K0116-02 ⚲		10	1	23T	SPM008	SH5139	SH6024WB	NFW1118
				Slave Cylinder w/o Bearing	K0116-02		10	1	23T	SPM008	SH5139	SH6024	NFW1118
			94		K0116-02 ⚲		10	1	23T	SPM007	SH5063	SH6024WB	NFW1118
MPV													
4	2606cc	2.6	91-89		KF711-03		8 1/2	15/16	22T	*	*	SH6070	*
6	2954cc	3.0	91-89	2WD	KF711-03		8 1/2	15/16	22T	*	*	SH6070	*
				4WD	KF711-03		8 1/2	15/16	22T	*	*	SH6071	*
NAVAJO													
6	4016cc	4.0	94-93		K0116-02 ⚲		10	1	23T	SPM006	SH5063	SH6024WB	NFW1118
				Slave Cylinder w/o Bearing	K0116-02		10	1	23T	SPM006	SH5063	SH6024	NFW1118
			92		K0116-01		10	1	23T	SPM005	SH5064	SH6001	NFW1118
			91		K0116-01 ⚲		10	1	23T	*	SH5060	SH6001WB	NFW1118
TRIBUTE													
4	1991cc	2.0	04-01		K70311-01		8 7/8	15/16	22T	*	SH5195	SH6164	*
	2254cc	2.3	08		K70417-01 Š		9 1/2	1	23T	*	*	SB60249	*
			06-05		K70417-01 Š		9 1/2	1	23T	*	*	SB60249	*
	2488cc	2.5	11-09		K70417-01 Š		9 1/2	1	23T	*	*	SB60249	*
MERCEDES BENZ													
C230													
4	1796cc	1.8	05-04	(fr. ch. #A634009, F539250 & R139448), From Eng. #30323422	K70477-01 ◎♈		9 1/8	1 1/8	26T	*	SH5244	SB60299	DMF91183
			04-03	(to ch. #A634008, F539249 & R139447), To Eng. #30323421	K70294-01 Š◎		9 1/8	1 1/8	26T	*	SH5244	SB60299	DMF91184
	2295cc	2.3	02		K70399-01 Š◎		9 7/16	1 1/8	26T	*	SH5244	SB60299	*
6	2496cc	2.5	07-06		K70477-01 ◎♈		9 1/8	1 1/8	26T	*	SH5244	SB60299	*
C240													
6	2597cc	2.6	03-01		K70294-01 Š◎		9 1/8	1 1/8	26T	*	SH5244	SB60299	*
C300													
6	2996cc	3.0	11-08		K70542-01 Š◎		9 7/16	1 1/8	26T	*	SH5550	SB60299	*
C320													
6	3199cc	3.2	05-03		K70353-01 Š◎		9 7/16	1 1/8	26T	*	SH5244	SB60299	*
C350													
6	3498cc	3.5	07-06	Sport	K70474-01 ◎♈		9 7/16	1 1/8	26T	*	SH5244	SB60299	*

⚲ Slave cylinder includes bearing (not Included in Clutch Kit)
◎ Kit Only
♈ Kit does not include Concentric Slave Cylinder and/or Release Bearing (Sold Separately)

* Not Available
Ø Components Available
Š Kit Includes Concentric Slave Cylinder
ƒ Kit Includes Flywheel

© 2014 ZF North American Operations, Inc. All Rights Reserved. No portion of this work may be reproduced or copied by any means without the prior approval of ZF North American Operations, Inc.

SACHS

CLUTCH KIT

Cyl.	CC Cubic Inch	Liter	Year	Application Information	Clutch Kit	Notes Pg.180	Disc Size O.D.	Disc Size I.D.	Disc Size Teeth	PreFilled Master Or System	Master Cylinder	Slave Cylinder	Flywheel
MERCEDES BENZ (Cont'd)													
SLK230													
4	2295cc	2.3	04		*					*	SH5244	SB60299	*
			03-01		*					*	SH5349	SB60299	*
			00-99		K70247-01 ◎		9 1/2	1 1/8	26T	*	SH5349	SH6468	*
SLK250													
4	1796cc	1.8	14-12	Turbo	K70652-01 ◎					*	*	SB60299	*
SLK280													
6	2996cc	3.0	08-06		K70476-01 Š◎		9 7/16	1 1/8	26T	*	SH5244	SB60299	*
SLK300													
6	2996cc	3.0	11-09		K70543-01 Š◎		9 7/16	1 1/8	26T	*	SH5244	SB60299	*
SLK320													
6	3199cc	3.2	04-01		*					*	SH5349	SB60299	*
SLK350													
6	3498cc	3.5	07-05	(fr. 6/30/05)	K70476-01 Š◎		9 7/16	1 1/8	26T	*	SH5244	SB60299	*
			05	(to 6/30/05)	*					*	SH5244	SB60299	*
180													
4	1897cc	1.9	63-60	A, B, C, DB, DC, Type 010, 110, 120	Ø	2	11 3/4	1 3/8	10T	*	*	*	*
180D													
4	1800cc	1.8	61-54		Ø	2	11 3/4	1 3/8	10T	*	*	*	*
190D													
4	2200cc	2.2	85-84	(201.122)	KF659-01 ◎		8	1 1/8	26T	*	SH5349	SH6468	*
190DC													
4	2000cc	2.0	65-63		Ø	2	11 3/4	1 3/8	10T	*	SH5349	*	*
190E													
4	2299cc	2.3	93-91	(201.028) (fr. ch. #F655 710)	K70013-01 ◎		9	1 1/8	26T	*	SH5349	SH6468	*
			88	(201.028) (to ch. #F655 709)	KF660-02 ◎		9	1 1/8	26T	*	SH5349	SH6468	*
			87-86	(201.034) 16V	KF660-01 ◎		9	1 1/8	26T	*	SH5349	SH6468	*
			86-84	(201.024)	KF297-02 ◎		8 1/2	1 1/8	26T	*	SH5349	SH6468	*
5	2497cc	2.5	89-86	(201.126)	KF297-01 ◎		8 1/2	1 1/8	26T	*	SH5349	*	*
6	2599cc	2.6	93-90	(201.029) (fr. ch. #F640 695)	K70013-01 ◎		9	1 1/8	26T	*	SH5349	*	*
			90-87	(201.029) (to ch. #F640 694)	KF660-02 ◎		9	1 1/8	26T	*	SH5349	*	*
190SL													
4	1900cc	1.9	63-60		Ø	2	11 3/4	1 3/8	10T	*	SH5349	*	*
200D													
4	2000cc	2.0	68-66	(W115) (to ch. #303 314)	KF152-01 ◎		8 1/2	1 1/8	10T	*	*	*	*
219													
6	2200cc	2.2	59-57	(fr. ch. #7504328)	Ø	2	11 3/4	1 3/8	10T	*	*	*	*
			57-56	(to ch. #7504327)	Ø	2	11 3/4	1 3/8	10T	*	*	*	*
220													
4	2197cc	2.2	73-68	(115.010)	KF152-01 ◎		8 1/2	1 1/8	10T	*	*	*	*
220D													
4	2197cc	2.2	73-68	(115.110) (to ch. #463 499)	KF152-02 ◎		8 1/2	1 1/8	10T	*	*	*	*
				(115.110) (fr. ch. #463 500)	KF297-03 ◎		8 1/2	1 1/8	10T	*	*	*	*

◎ Kit Only

* Not Available
Ø Components Available
Š Kit Includes Concentric Slave Cylinder
ƒ Kit Includes Flywheel

© 2014 ZF North American Operations, Inc. All Rights Reserved. No portion of this work may be reproduced or copied by any means without the prior approval of ZF North American Operations, Inc.

CLUTCH KIT

Cyl.	CC Cubic Inch	Liter	Year	Application Information	Clutch Kit	Notes Pg.180	Disc Size O.D.	Disc Size I.D.	Disc Size Teeth	PreFilled Master Or System	Master Cylinder	Slave Cylinder	Flywheel
MERCEDES BENZ (Cont'd)													
220S													
6	2200cc	2.2	59-57	(180.010) (fr. ch. #7509014) recessed flywheel	Ø	2	11 3/4	1 3/8	10T	*	*	*	*
230													
4	2307cc	2.3	78-74	(115.017) (to ch. #077 214)	KF152-01 ◎		8 1/2	1 1/8	10T	*	*	*	*
6	2306cc	2.3	69-68	(114.015)	KF675-01 ◎		9	1 1/8	10T	*	*	*	*
240D													
4	2400cc	2.4	83-77	(123.123) (to ch. #079 818)	KF152-02 ◎		8 1/2	1 1/8	10T	*	*	*	*
	2404cc	2.4	76-74	(115.117) (to ch. #118 544)	KF152-02 ◎		8 1/2	1 1/8	10T	*	*	*	*
250													
6	2496cc	2.5	70-68		KF675-01 ◎		9	1 1/8	10T	*	*	*	*
250S													
6	2496cc	2.5	67-66		KF675-01 ◎		9	1 1/8	10T	*	*	*	*
250SE													
6	2496cc	2.5	67-66		KF675-01 ◎		9	1 1/8	10T	*	*	*	*
250SEC													
6	2496cc	2.5	67-66		KF675-01 ◎		9	1 1/8	10T	*	*	*	*
250SL													
6	2496cc	2.5	67-66		KF675-01 ◎		9	1 1/8	10T	*	*	*	*
260E													
6	2599cc	2.6	89-87		KF660-02 ◎		9	1 1/8	26T	*	SH5349	*	*
280S													
6	2778cc	2.8	71-68	(fr. ch. #027 623)	KF675-01 ◎		9	1 1/8	10T	*	*	*	*
				(to ch. #027 622)	Ø		11 3/4	1 3/8	10T	*	*	*	*
280SE													
6	2778cc	2.8	71-68	(fr. ch. #028 986)	KF675-01 ◎		9	1 1/8	10T	*	*	*	*
				(to ch. #028 985)	Ø		11 3/4	1 3/8	10T	*	*	*	*
280SEC													
6	2778cc	2.8	70-68	(fr. ch. #002 864)	KF675-01 ◎		9	1 1/8	10T	*	*	*	*
	2800cc	2.8	70-68	(to ch. #002 863)	Ø		11 3/4	1 3/8	10T	*	*	*	*
280SEL													
6	2778cc	2.8	71-68	(fr. ch. #029 326)	KF675-01 ◎		9	1 1/8	10T	*	*	*	*
				(to ch. #029 325)	Ø		11 3/4	1 3/8	10T	*	*	*	*
280SL													
6	2778cc	2.8	71-68		Ø		11 3/4	1 3/8	10T	*	*	*	*
300E													
6	2962cc	3.0	88-86	(124.030)	KF663-01 ◎		9 1/2	1 1/8	26T	*	SH5349	*	*
300SE													
6	2962cc	3.0	91-90		K70014-02 ◎		9 1/2	1 1/8	26T	*	SH5349	*	*
300SEL													
6	2962cc	3.0	91-90		K70014-02 ◎		9 1/2	1 1/8	26T	*	SH5349	*	*
8	4520cc	4.5	73-72		KF675-01 ◎		9	1 1/8	10T	*	SH5349	*	*
300SL													
6	2962cc	3.0	93-90		K70014-02 ◎		9 1/2	1 1/8	26T	*	SH5349	*	*
300TE													
6	2962cc	3.0	93-90		K70014-02 ◎		9 1/2	1 1/8	26T	*	SH5349	*	*

◎ Kit Only

* Not Available
Ø Components Available
Š Kit Includes Concentric Slave Cylinder
ƒ Kit Includes Flywheel

© 2014 ZF North American Operations, Inc. All Rights Reserved. No portion of this work may be reproduced or copied by any means without the prior approval of ZF North American Operations, Inc.

SACHS

CLUTCH KIT

Cyl.	CC Cubic Inch	Liter	Year	Application Information	Clutch Kit	Notes Pg.180	Disc Size O.D.	Disc Size I.D.	Disc Size Teeth	PreFilled Master Or System	Master Cylinder	Slave Cylinder	Flywheel
MERCURY													
BOBCAT													
4	140"	2.3	80-75		K0315-01		8 1/2	1	23T	*	*	*	*
CALIENTE													
8	260"	4.3	64	10" Clutch	K0030-04		10	1 1/16	10T	*	*	*	*
				10 1/2" Clutch	K0648-01	2	10 1/2	1 1/16	10T	*	*	*	*
	390"	6.4	67-66		K0465-02	2	11	1 1/16	10T	*	*	*	*
				Optional Kit/Diaph. Cover	K0465-01		11	1 1/16	10T	*	*	*	*
CAPRI													
4	98"	1.6	94-91	Non-Turbo	KF759-02		7 7/8	7/8	20T	*	*	SH6053	*
				Turbo	KF638-01		8 7/8	15/16	22T	*	*	*	*
	122"	2.0	74-71		K0315-03		8 1/2	1	23T	*	*	*	*
	140"	2.3	86-81	4 Spd., German trans.	K0315-01		8 1/2	1	23T	*	*	*	NFW1101
			85-83	5 Spd., BW trans.	K0072-03	11	9	1 1/16	10T	*	*	*	NFW1101
			83-81	(fr. 12/80) 5 Spd., Ford trans.	K0315-02		8 1/2	1	23T	*	*	*	*
			83-79	4 Spd., Ford trans.	K0315-04		8 1/2	1 1/16	10T	*	*	*	*
			81	(fr. 10/80 to 11/80) 5 Spd., Ford trans.	K0315-04		8 1/2	1 1/16	10T	*	*	*	*
			81-80	(to 9/80) 5 Spd., Ford trans.	K0315-02		8 1/2	1	23T	*	*	*	*
			80-79	4 Spd., BW trans.	K0315-04		8 1/2	1 1/16	10T	*	*	*	*
				4 Spd., German trans.	K0315-01		8 1/2	1	23T	*	*	*	*
			77-76	4 Spd., Ford trans.	K0315-04		8 1/2	1 1/16	10T	*	*	*	*
6	200"	3.3	82-79		K0016-01		9	1 1/16	10T	*	*	*	*
8	302"	5.0	86		K0048-01		10 1/2	1 1/16	10T	*	*	*	NFW1100
				Optional Power Clutch Kit	PC0048-01		10 1/2	1 1/16	10T	*	*	*	NFW1100
COMET													
6	200"	3.3	66-64	10" Clutch	K0030-04		10	1 1/16	10T	*	*	*	*
				10 1/2" Clutch	K0648-01	2	10 1/2	1 1/16	10T	*	*	*	*
	250"	4.1	77-74	10" Clutch	K0030-04		10	1 1/16	10T	*	*	*	*
				10 1/2" Clutch	K0648-01	2	10 1/2	1 1/16	10T	*	*	*	*
8	260"	4.3	64-63	10" Clutch	K0030-04		10	1 1/16	10T	*	*	*	*
				10 1/2" Clutch	K0648-01	2	10 1/2	1 1/16	10T	*	*	*	*
	289"	4.7	67-66	10" Clutch	K0030-04		10	1 1/16	10T	*	*	*	*
				10 1/2" Clutch	K0648-01	2	10 1/2	1 1/16	10T	*	*	*	*
			66-64	10" Clutch	K0030-04		10	1 1/16	10T	*	*	*	*
				10 1/2" Clutch	K0648-01	2	10 1/2	1 1/16	10T	*	*	*	*
	302"	5.0	77-71	2 bbl., 10" Clutch	K0030-04		10	1 1/16	10T	*	*	*	*
				2 bbl., 10 1/2" Clutch	K0648-01	2	10 1/2	1 1/16	10T	*	*	*	*
			69-68	2 bbl., 10" Clutch	K0030-04		10	1 1/16	10T	*	*	*	*
				2 bbl., 10 1/2" Clutch	K0648-01	2	10 1/2	1 1/16	10T	*	*	*	*
	351"	5.8	69		K0465-02	2	11	1 1/16	10T	*	*	*	*
				Optional Kit/Diaph. Cover	K0465-01		11	1 1/16	10T	*	*	*	*
	390"	6.4	69-66	2 bbl.	K0465-02	2	11	1 1/16	10T	*	*	*	*
				Optional Kit/Diaph. Cover	K0465-01		11	1 1/16	10T	*	*	*	*
COUGAR													
4	121"	2.0	02-99		K70124-01 Š		9 7/16	1	23T	*	*	SB60092	*
	140"	2.3	86-84		K0072-03	11	9	1 1/16	10T	*	*	*	NFW1101

* Not Available
Ø Components Available
Š Kit Includes Concentric Slave Cylinder
ƒ Kit Includes Flywheel

© 2014 ZF North American Operations, Inc. All Rights Reserved. No portion of this work may be reproduced or copied by any means without the prior approval of ZF North American Operations, Inc.

CLUTCH KIT

Cyl.	CC Cubic Inch	Liter	Year	Application Information	Clutch Kit	Notes Pg.180	Disc Size O.D.	Disc Size I.D.	Disc Size Teeth	PreFilled Master Or System	Master Cylinder	Slave Cylinder	Flywheel
MERCURY (Cont'd)													
COUGAR (Cont'd)													
4	140"	2.3	81	German trans.	K0315-01		8 1/2	1	23T	*	*	*	*
6	153"	2.5	02-99	incl. S	K70125-01 Š		9 7/16	1	23T	*	*	SB60093	NFW1150
	232"	3.8	90-89		K70130-01 ⚲◎		11	1 1/16	10T	*	*	SH6001WB	*
				Slave Cylinder w/o Bearing	K70130-01 ◎		11	1 1/16	10T	*	*	SH6001	*
8	289"	4.7	67	2 bbl., 10" Clutch	K0030-04		10	1 1/16	10T	*	*	*	*
				2 bbl., 10 1/2" Clutch	K0648-01	2	10 1/2	1 1/16	10T	*	*	*	*
	302"	5.0	70-68	3 Spd., 10" Clutch	K0030-04		10	1 1/16	10T	*	*	*	*
				3 Spd., 10 1/2" Clutch	K0648-01	2	10 1/2	1 1/16	10T	*	*	*	*
	351"	5.8	73-69		K0465-02	2	11	1 1/16	10T	*	*	*	*
				Optional Kit/Diaph. Cover	K0465-01		11	1 1/16	10T	*	*	*	*
	390"	6.4	69-68	4 bbl.	K0465-02	2	11	1 1/16	10T	*	*	*	*
				Optional Kit/Diaph. Cover	K0465-01		11	1 1/16	10T	*	*	*	*
			69-67	2 bbl.	K0465-02	2	11	1 1/16	10T	*	*	*	*
CYCLONE													
8	260"	4.3	64	10" Clutch	K0030-04		10	1 1/16	10T	*	*	*	*
				10 1/2" Clutch	K0648-01	2	10 1/2	1 1/16	10T	*	*	*	*
	302"	5.0	70-68	10" Clutch	K0030-04		10	1 1/16	10T	*	*	*	*
				10 1/2" Clutch	K0648-01	2	10 1/2	1 1/16	10T	*	*	*	*
	351"	5.8	71-70		K0465-02	2	11	1 1/16	10T	*	*	*	*
				Optional Kit/Diaph. Cover	K0465-01		11	1 1/16	10T	*	*	*	*
	390"	6.4	69-66		K0465-02	2	11	1 1/16	10T	*	*	*	*
				Optional Kit/Diaph. Cover	K0465-01		11	1 1/16	10T	*	*	*	*
LYNX													
4	116"	1.9	87-85		K0036-03	35	8 1/2	7/8	20T	*	*	*	NFW1120
MARQUIS													
4	140"	2.3	83		K0315-01		8 1/2	1	23T	*	*	*	*
8	351"	5.8	72-71		K0465-02	2	11	1 1/16	10T	*	*	*	*
				Optional Kit/Diaph. Cover	K0465-01		11	1 1/16	10T	*	*	*	*
	390"	6.4	70-68		K0465-02	2	11	1 1/16	10T	*	*	*	*
				Optional Kit/Diaph. Cover	K0465-01		11	1 1/16	10T	*	*	*	*
MILAN													
4	140"	2.3	09-06		K70460-01 ◎		8 7/8	15/16	22T	*	SH5242	SH6181	NFW1000
	152"	2.5	11-10		K70621-01 ◎		9	7/8	22T	*	SH5527	SH6181	*
MONARCH													
6	250"	4.1	80-75	10" Clutch	K0030-04		10	1 1/16	10T	*	*	*	*
				10 1/2" Clutch	K0648-01	2	10 1/2	1 1/16	10T	*	*	*	*
8	302"	5.0	79-77	10" Clutch	K0030-04		10	1 1/16	10T	*	*	*	*
				10 1/2" Clutch	K0648-01	2	10 1/2	1 1/16	10T	*	*	*	*
MONTCLAIR													
8	390"	6.4	68-64		K0465-02	2	11	1 1/16	10T	*	*	*	*
				Optional Kit/Diaph. Cover	K0465-01		11	1 1/16	10T	*	*	*	*
MONTEGO													
6	250"	4.1	74-69	10" Clutch	K0030-04		10	1 1/16	10T	*	*	*	*
				10 1/2" Clutch	K0648-01	2	10 1/2	1 1/16	10T	*	*	*	*

⚲ Slave cylinder includes bearing (not Included in Clutch Kit)
◎ Kit Only

* Not Available
Ø Components Available
Š Kit Includes Concentric Slave Cylinder
ƒ Kit Includes Flywheel

© 2014 ZF North American Operations, Inc. All Rights Reserved. No portion of this work may be reproduced or copied by any means without the prior approval of ZF North American Operations, Inc.

SACHS

CLUTCH KIT

Cyl.	CC Cubic Inch	Liter	Year	Application Information	Clutch Kit	Notes Pg.180	Disc Size O.D.	Disc Size I.D.	Disc Size Teeth	PreFilled Master Or System	Master Cylinder	Slave Cylinder	Flywheel
MERCURY (Cont'd)													
MONTEGO (Cont'd)													
8	302"	5.0	74	3 Spd.	K0465-02	2	11	1 1/16	10T	*	*	*	*
				Optional Kit/Diaph. Cover	K0465-01		11	1 1/16	10T	*	*	*	*
			73-69	3 Spd.	K0030-04		10	1 1/16	10T	*	*	*	*
	351"	5.8	74-69	incl. Cobra Jet eng.	K0465-02	2	11	1 1/16	10T	*	*	*	*
				Optional Kit/Diaph. Cover	K0465-01		11	1 1/16	10T	*	*	*	*
	390"	6.4	69-68	2 bbl.	K0465-02	2	11	1 1/16	10T	*	*	*	*
				Optional Kit/Diaph. Cover	K0465-01		11	1 1/16	10T	*	*	*	*
MONTEREY													
8	351"	5.8	72-71		K0465-02	2	11	1 1/16	10T	*	*	*	*
				Optional Kit/Diaph. Cover	K0465-01		11	1 1/16	10T	*	*	*	*
	390"	6.4	70-63		K0465-02	2	11	1 1/16	10T	*	*	*	*
				Optional Kit/Diaph. Cover	K0465-01		11	1 1/16	10T	*	*	*	*
MYSTIQUE													
4	121"	2.0	00-95		K70124-01 Š		9 7/16	1	23T	*	*	SB60092	*
6	153"	2.5	00-95		K70125-01 Š		9 7/16	1	23T	*	*	SB60093	NFW1150
PARK LANE													
8	390"	6.4	68		K0465-02	2	11	1 1/16	10T	*	*	*	*
				Optional Kit/Diaph. Cover	K0465-01		11	1 1/16	10T	*	*	*	*
			66-64		K0465-02	2	11	1 1/16	10T	*	*	*	*
				Optional Kit/Diaph. Cover	K0465-01		11	1 1/16	10T	*	*	*	*
SABLE													
4	153"	2.5	86		K0036-03	35	8 1/2	7/8	20T	*	*	*	*
TOPAZ													
4	140"	2.3	94-84		K0036-03	35	8 1/2	7/8	20T	*	*	*	*
TRACER													
4	98"	1.6	89-87		KF605-02		7 1/2	7/8	20T	*	*	*	*
	113"	1.8	96-91		KF638-04		8 1/2	15/16	22T	*	SH5242	SH6050	*
	116"	1.9	96-91		K1122-01		7 7/8	7/8	20T	*	SH5242	SH6051	NFW1105
	121"	2.0	99-97		K70311-01		8 7/8	15/16	22T	*	SH5242	SH6181	NFW1143
ZEPHYR													
4	140"	2.3	83-78		K0315-01		8 1/2	1	23T	*	*	*	*
6	200"	3.3	81-78		K0016-01		9	1 1/16	10T	*	*	*	*
8	302"	5.0	78		K0030-04		10	1 1/16	10T	*	*	*	*
MERKUR													
XR4Ti													
4	140"	2.3	89-85		K0072-02	11	9	1	23T	*	*	*	NFW1101
MINI													
COOPER													
4	1598cc	1.6	13-08	Non-Turbo	K70472-01 ◎		7 7/8	3/4	17T	*	SH5246	SH6519	*
			11	Turbo exc. John Cooper Works models	*	60				*	SH5246	SH6519	DMF91174
			11-09	Turbo w/ John Cooper Works models	*	60				*	SH5246	SH6519	DMF91164
			10-08	Turbo exc. John Cooper Works models	K70473-01 ◎	60	9	1	28T	*	SH5246	SH6519	DMF91165

◎ Kit Only

* Not Available
Ø Components Available
Š Kit Includes Concentric Slave Cylinder
ƒ Kit Includes Flywheel

© 2014 ZF North American Operations, Inc. All Rights Reserved. No portion of this work may be reproduced or copied by any means without the prior approval of ZF North American Operations, Inc.

CLUTCH KIT

Cyl.	CC Cubic Inch	Liter	Year	Application Information	Clutch Kit	Notes Pg.180	Disc Size O.D.	Disc Size I.D.	Disc Size Teeth	PreFilled Master Or System	Master Cylinder	Slave Cylinder	Flywheel
MINI (Cont'd)													
COOPER (Cont'd)													
4	1598cc	1.6	07	Non-Turbo	K70472-01 ◎		7 7/8	3/4	17T	*	SH5246	*	*
				Turbo exc. John Cooper Works models	K70473-01 ◎	60	9	1	28T	*	SH5246	SH6529	DMF91165
	1600cc	1.6	08-05	5 Spd., Non-Turbo	K70341-02 ◎		7 7/8	3/4	17T	*	SH5246	SH6305	*
			08-02	6 Spd., Supercharged	K70339-01	60	8 1/2	1	14T	*	SH5246	SH6206	DMF91139
			04-02	5 Spd., Non-Turbo	K70341-01 ◎		7 7/8	13/16	18T	*	SH5246	SH6206	*
COOPER COUNTRYMAN													
4	1598cc	1.6	13-11	Non-Turbo	K70472-01 ◎		7 7/8	3/4	17T	*	SH5246	SH6519	*
				Turbo - exc. John Cooper Works ALL4	*					*	SH5246	SH6519	DMF91174
MITSUBISHI													
CORDIA													
4	1795cc	1.8	88-84	Turbo	KF621-03		7 7/8	7/8	20T	*	SH5052	*	*
	1997cc	2.0	88-84	(fr. 3/83)	KF621-03		7 7/8	7/8	20T	*	*	*	*
ECLIPSE													
4	1755cc	1.8	94-90	(fr. 5/90)	KF621-03		7 7/8	7/8	20T	*	SH5114	SH6048	NFW5106
			90	(to 4/90) w/ Speed Control	KF621-03		7 7/8	7/8	20T	*	SH5115	SH6048	NFW5106
				(to 4/90) w/o Speed Control	KF621-03		7 7/8	7/8	20T	*	SH5114	SH6048	NFW5106
	1997cc	2.0	99-95	Turbo, incl. Spyder Convertible	KF735-01		8 7/8	7/8	20T	*	SH5116	SH6046	*
				Non-Turbo	K70131-01 ƒ◎	10	9	15/16	17T	*	SH5116	SH6111	*
				Optional Power Clutch Kit	PC70131-01 ƒ◎	10	9	15/16	17T	*	SH5116	SH6111	*
			94-91	Turbo, FWD	KF735-01		8 7/8	7/8	20T	*	SH5114	SH6048	*
				Turbo, AWD	KF735-01		8 7/8	7/8	20T	*	SH5114	SH6138	*
				Non-Turbo	K0107-01		8 1/2	7/8	20T	*	SH5114	SH6048	*
			90	Turbo w/o Speed Control	KF735-01		8 7/8	7/8	20T	*	SH5115	SH6048	*
				Turbo w/ Speed Control	KF735-01		8 7/8	7/8	20T	*	SH5114	SH6048	*
				Non-Turbo w/o Speed Control	K0107-01		8 1/2	7/8	20T	*	SH5115	SH6048	*
				Non-Turbo w/ Speed Control	K0107-01		8 1/2	7/8	20T	*	SH5114	SH6048	*
	2351cc	2.4	05-00	incl. Spyder Convertible	KF735-01		8 7/8	7/8	20T	*	SH5210	SH6175	*
			99-96	Spyder Convertible	KF735-01		8 7/8	7/8	20T	*	SH5116	SH6046	*
	2378cc	2.4	11-06	incl. Spyder Convertible	K70516-01 ◎		9	7/8	20T	*	SH5519	SH6175	*
6	2972cc	3.0	05-00	incl. Spyder Convertible	K70264-01 ◎		8 7/8	1	23T	*	SH5211	SH6176	*
	3828cc	3.8	10-06	incl. Spyder Convertible	K70517-01 Š◎		9 7/16	1	23T	*	*	SB60300	*
EXPO													
4	1834cc	1.8	94-92		K0107-01		8 1/2	7/8	20T	*	*	SH6046	*
	2351cc	2.4	95-92		KF735-01		8 7/8	7/8	20T	*	*	SH6046	*
GALANT													
4	1997cc	2.0	93-89	SOHC, FWD	K0107-01		8 1/2	7/8	20T	*	SH5115	SH6048	*
			92-90	DOHC, AWD	KF735-01		8 7/8	7/8	20T	*	SH5115	SH6046	*
			92-89	DOHC, FWD	KF735-01		8 7/8	7/8	20T	*	SH5115	SH6048	*
	2351cc	2.4	98-94		KF735-01		8 7/8	7/8	20T	*	*	SH6046	*
			87-85		KF728-01		8 7/8	7/8	20T	*	SH5115	SH6048	*
LANCER													
4	1997cc	2.0	06-05	Turbo	K70384-01 ◎		9 1/2	1 1/16	23T	*	SH5209	SH6176	*

◎ Kit Only

* Not Available
Ø Components Available
Š Kit Includes Concentric Slave Cylinder
ƒ Kit Includes Flywheel

© 2014 ZF North American Operations, Inc. All Rights Reserved. No portion of this work may be reproduced or copied by any means without the prior approval of ZF North American Operations, Inc.

SACHS

CLUTCH KIT

Cyl.	CC Cubic Inch	Liter	Year	Application Information	Clutch Kit	Notes Pg.180	Disc Size O.D.	Disc Size I.D.	Disc Size Teeth	PreFilled Master Or System	Master Cylinder	Slave Cylinder	Flywheel
MITSUBISHI (Cont'd)													
LANCER (Cont'd)													
4	1998cc	2.0	11-10	Turbo	K70615-01 ◎		9 1/2	1	23T	*	*	SH6176	*
			11-08	Non-Turbo	K70602-01 Š◎		8 7/8	7/8	20T	*	*	SB60300	*
			08	Turbo	K70615-01 ◎		9 1/2	1	23T	*	*	SH6176	*
	1999cc	2.0	06-05	Non-Turbo	K70540-01 ◎		8 7/8	7/8	20T	*	SH5209	SH6176	*
	2000cc	2.0	04	Non-Turbo	K70540-01 ◎		8 7/8	7/8	20T	*	SH5209	SH6176	*
			04-03	Turbo	K70384-01 ◎		9 1/2	1 1/16	23T	*	SH5209	SH6176	*
			03-02	Non-Turbo	K70370-01 Š◎		8 1/2	7/8	20T	*	SH5209	*	*
	2360cc	2.4	11-09		K70622-01 Š◎		9	3/4	20T	*	*	SB60300	*
	2378cc	2.4	06-05		K70442-01 ◎		9	7/8	20T	*	SH5324	SH6176	*
	2400cc	2.4	04		K70442-01 ◎		9	7/8	20T	*	SH5324	SH6176	*
MIRAGE													
4	1468cc	1.5	02	(fr. 11/01)	KF621-03		7 7/8	7/8	20T	*	SH5247	SH6176	*
			02-97	(to 10/01)	KF621-03		7 7/8	7/8	20T	*	SH5247	SH6208	*
			96-93		KF621-03		7 7/8	7/8	20T	*	SH5247	SH6208	NFW5106
			92-88		KF621-03		7 7/8	7/8	20T	*	*	SH6013	*
			88-87	(fr. 6/86 to 3/88) 5 Spd.	KF600-02		7 1/4	7/8	20T	*	SH5052	SH6048	*
			87	(fr. 6/86) 4 Spd.	KF621-03		7 7/8	7/8	20T	*	SH5052	SH6048	*
			86-85	(to 5/86) 4 Spd.	KF621-03		7 7/8	7/8	20T	*	SH5052	*	*
				(to 5/86) 5 Spd.	KF600-02		7 1/4	7/8	20T	*	SH5052	*	*
	1597cc	1.6	92-91	Twin cam	KF621-03		7 7/8	7/8	20T	*	*	SH6048	*
			89-88	(fr. 4/88) Turbo	K0107-01		8 1/2	7/8	20T	*	*	SH6048	*
			88-86	(fr. 3/88 to 6/86) Turbo	KF621-03		7 7/8	7/8	20T	*	SH5052	SH6013	*
			86-85	(to 5/86) Turbo	KF621-03		7 7/8	7/8	20T	*	*	*	*
	1834cc	1.8	02-97		K0107-01		8 1/2	7/8	20T	*	SH5247	SH6208	*
			96-93		K0107-01		8 1/2	7/8	20T	*	*	SH6046	*
PRECIS													
4	1468cc	1.5	93-89	(fr. 8/89)	KF621-03		7 7/8	7/8	20T	*	*	SH6013	*
			89-87	(to 7/89)	KF600-02		7 1/4	7/8	20T	*	*	*	*
SIGMA													
6	2972cc	3.0	90-88		KF728-01		8 7/8	7/8	20T	*	SH5115	SH6112	*
STARION													
4	2555cc	2.6	89-87	(fr. 6/87) Turbo w/ intercooler	KF678-05		9 7/16	1 1/16	23T	*	SH5051	SH6045	NFW5102
			87-85	(to 5/87) Turbo w/ intercooler	KF685-01		8 7/8	1	23T	*	SH5051	SH6045	NFW5102
			87-83	(to 5/87) Turbo	KF685-03		8 7/8	1	23T	*	SH5051	SH6045	NFW5102
TREDIA													
4	1795cc	1.8	88-84	Turbo	KF621-03		7 7/8	7/8	20T	*	SH5052	*	*
3000 GT													
6	2972cc	3.0	99-91	2WD, Non-Turbo	KF735-01		8 7/8	7/8	20T	*	SH5522	SH6112	NFW5134
				4WD, Turbo	K70048-01 ◎		9 7/8	1 1/16	23T	*	SH5080	SH6112	*
MITSUBISHI LIGHT TRUCK & VAN													
MIGHTY MAX													
4	1997cc	2.0	89-83		KF591-04		8 1/2	1	23T	*	*	*	NFW5105
	2346cc	2.3	85-83		KF685-03		8 7/8	1	23T	*	*	SH6045	*
	2351cc	2.4	96-90		KF685-03		8 7/8	1	23T	*	*	*	*

◎ Kit Only

* Not Available
Ø Components Available
Š Kit Includes Concentric Slave Cylinder
ƒ Kit Includes Flywheel

© 2014 ZF North American Operations, Inc. All Rights Reserved. No portion of this work may be reproduced or copied by any means without the prior approval of ZF North American Operations, Inc.

CLUTCH KIT

Cyl.	CC Cubic Inch	Liter	Year	Application Information	Clutch Kit	Notes Pg.180	Disc Size O.D.	Disc Size I.D.	Disc Size Teeth	PreFilled Master Or System	Master Cylinder	Slave Cylinder	Flywheel
MITSUBISHI LIGHT TRUCK & VAN (Cont'd)													
MIGHTY MAX (Cont'd)													
4	2555cc	2.6	89-83		KF685-03		8 7/8	1	23T	*	*	*	NFW5102
6	2972cc	3.0	94-90		KF703-01		9 7/16	1 3/16	14T	*	SH5052	SH6074	*
MONTERO													
4	2555cc	2.6	89-86	(fr. 5/86)	KF685-01		8 7/8	1	23T	*	SH5052	SH6045	NFW5102
			86-83	(to 4/86)	KF685-03		8 7/8	1	23T	*	SH5052	SH6045	NFW5102
6	2972cc	3.0	96-89		KF703-01		9 7/16	1 3/16	14T	*	*	SH6415	*
MONTERO SPORT													
4	2351cc	2.4	99-97		K70252-01		8 7/8	1 1/16	23T	*	SH5377	SH6045	*
6	2972cc	3.0	99-97		KF703-01		9 7/16	1 3/16	14T	*	SH5377	SH6390	*
OUTLANDER													
4	2378cc	2.4	06		K70515-01 ◎		9	7/8	20T	*	SH5324	SH6176	*
			05		K70442-01 ◎		9	7/8	20T	*	SH5324	SH6176	*
OUTLANDER SPORT													
4	1998cc	2.0	11		K70602-01 Š◎		8 7/8	7/8	20T	*	*	SB60300	*
RAIDER													
6	3703cc	3.7	09-06		K70144-02	67	12	1 1/8	10T	*	SH5140	SH6328	*
NISSAN / DATSUN													
ALTIMA													
4	2389cc	2.4	01-98		K70098-02		8 7/8	1	24T	*	SH5249	SH6075	*
			97-93		K70098-01		8 7/8	1	24T	*	SH5084	SH6075	*
	2500cc	2.5	12-07		K70504-01 Š◎		9 1/2	1	21T	*	*	SB60302	*
			06-02		K70355-01	60	9 1/2	1	24T	*	SH5250	SH6210	DMF91140
6	3498cc	3.5	12-07		*					*	*	SB60302	*
			06-02		K70357-01 ◎		9 7/8	1	24T	*	SH5250	SH6210	*
B210													
4	1288cc	1.3	74		KF537-01	63	7 1/8	13/16	18T	*	*	*	*
	1393cc	1.4	78-75		KF537-01	63	7 1/8	13/16	18T	*	SH5129	SH6076	*
F-10													
4	1393cc	1.4	78-76	(fr. 6/76)	KF597-01 ◎		7 1/2	1	24T	*	SH5129	SH6379	*
			76	(to 5/76)	KF597-01 ◎		7 1/2	1	24T	*	SH5127	SH6379	*
MAXIMA													
6	2393cc	2.4	84-81		KF594-02	56,63	8 7/8	1	24T	*	SH5005	SH6076	*
	2793cc	2.8	83-81		KF594-02	56,63	8 7/8	1	24T	*	SH5005	SH6076	*
	2960cc	3.0	94-89		KF686-01	56	9 7/16	1	24T	*	SH5005	SH6075	*
			88-85		KF686-01	56	9 7/16	1	24T	*	SH5005	SH6470	*
	2988cc	3.0	01-99	(fr. 4/99)	KF686-01	56	9 7/16	1	24T	*	SH5250	SH6454	*
			99-95	(fr. 2/94 to 3/99)	KF686-01	56	9 7/16	1	24T	*	SH5353	SH6454	*
	3498cc	3.5	06-02		K70357-01 ◎	54,56	9 7/8	1	24T	*	SH5499	SH6210	*
MULTI (CANADA ONLY)													
4	1998cc	2.0	88-86		KF633-02		8 7/8	1	24T	*	*	*	*
NX COUPE													
4	1597cc	1.6	93-91		KF639-02 ◎		7 1/2	13/16	18T	*	*	SH6075	NFW5314
	1998cc	2.0	93-91		K70051-01		8 1/2	13/16	18T	*	*	SH6075	*
PULSAR													
4	1597cc	1.6	83		KF537-03		7 1/8	13/16	18T	*	*	*	*

◎ Kit Only

* Not Available
Ø Components Available
Š Kit Includes Concentric Slave Cylinder
ƒ Kit Includes Flywheel

© 2014 ZF North American Operations, Inc. All Rights Reserved. No portion of this work may be reproduced or copied by any means without the prior approval of ZF North American Operations, Inc.

SACHS

CLUTCH KIT

Cyl.	CC Cubic Inch	Liter	Year	Application Information	Clutch Kit	Notes Pg.180	Disc Size O.D.	Disc Size I.D.	Disc Size Teeth	PreFilled Master Or System	Master Cylinder	Slave Cylinder	Flywheel
NISSAN / DATSUN (Cont'd)													
PULSAR NX													
4	1488cc	1.5	84-83		KF587-02		7 7/8	13/16	18T	*	*	*	*
	1597cc	1.6	90-89		KF639-02 ◎		7 1/2	13/16	18T	*	*	*	NFW5314
			88-87	XE (SOHC)	KF639-02 ◎		7 1/2	13/16	18T	*	*	*	NFW5307
			87	SE (DOHC)	KF587-03		7 7/8	13/16	18T	*	*	*	*
			86-83		KF537-03		7 1/8	13/16	18T	*	*	*	*
	1809cc	1.8	89-88		KF727-01		8 1/2	1	24T	*	*	SH6075	*
SENTRA													
4	1488cc	1.5	83-82		KF537-03		7 1/8	13/16	18T	*	*	*	*
	1597cc	1.6	99-90	(fr. 8/90)	KF639-02 ◎		7 1/2	13/16	18T	*	*	*	NFW5314
			90-88	(fr. 8/88 to 7/90) 2WD	KF639-02 ◎		7 1/2	13/16	18T	*	*	*	NFW5314
			90-87	(to 7/90) 4WD	KF587-02		7 7/8	13/16	18T	*	*	*	*
			87-86	(fr. 1/86 to 7/88) 2WD	KF639-02 ◎		7 1/2	13/16	18T	*	*	*	NFW5307
			85-83	(to 12/85) 2WD	KF537-03		7 1/8	13/16	18T	*	*	*	*
	1688cc	1.7	86-83		KF537-03		7 1/8	13/16	18T	*	*	*	*
	1798cc	1.8	14-13	S	*					*	SH5551	SB60302	DMF91185
	1809cc	1.8	06-00		K70051-01		8 1/2	13/16	18T	*	SH5251	SH6212	*
	1997cc	2.0	12		K70556-01 Š◎		8 7/8	15/16	21T	*	*	SB60302	DMF91185
			11-07		K70556-01 Š◎		8 7/8	15/16	21T	*	*	SB60302	*
	1998cc	2.0	01-98		K70051-01		8 1/2	13/16	18T	*	SH5251	SH6212	*
			94-91		K70051-01		8 1/2	13/16	18T	*	SH5251	SH6212	*
	2500cc	2.5	12-07		K70504-01 Š◎		9 1/2	1	21T	*	*	SB60302	*
			06-02		K70355-01	60	9 1/2	1	24T	*	SH5251	SH6210	DMF91140
STANZA													
4	1974cc	2.0	89-86		KF754-01		8 7/8	1	24T	*	SH5005	SH6165	*
			85-82		KF587-02		7 7/8	13/16	18T	*	*	*	*
	2389cc	2.4	92-90		KF594-04		8 7/8	1	24T	*	SH5005	SH6075	*
VERSA													
4	1598cc	1.6	14-12		K70635-01 Š◎		8 1/32	55/64	26T	*	*	SB60323	*
			11-09		K70635-01 Š◎		8 1/32	55/64	26T	*	SH5551	SB60323	*
	1798cc	1.8	12		K70556-01 Š◎		8 7/8	15/16	21T	*	SH5551	SB60302	DMF91185
			11-07		K70556-01 Š◎		8 7/8	15/16	21T	*	SH5551	SB60302	*
VERSA NOTE													
4	1598cc	1.6	14	S	K70635-01 Š◎		8 1/32	55/64	26T	*	*	SB60323	*
200SX													
4	1597cc	1.6	98-95		KF639-02 ◎		7 1/2	13/16	18T	*	*	*	NFW5314
	1809cc	1.8	87		KF633-01	63	8 7/8	1	24T	*	SH5083	SH6012	*
			86-84		KF634-01	63	8 7/8	1	24T	*	SH5083	SH6012	*
	1952cc	2.0	81-79	(fr. 6/79)	KF587-01		7 7/8	1	24T	*	SH5005	SH6012	*
			79-77	(to 5/79)	KF587-01		7 7/8	1	24T	*	SH5129	SH6012	*
	1974cc	2.0	88-84		KF633-01	63	8 7/8	1	24T	*	SH5083	SH6012	*
	1998cc	2.0	98-95		K70051-01		8 1/2	13/16	18T	*	*	*	*
	2187cc	2.2	83-82		KF594-01		8 7/8	1	24T	*	SH5005	SH6012	*
6	2960cc	3.0	88-87		KF618-01	63	9 7/16	1	24T	*	SH5083	SH6077	*

◎ Kit Only

* Not Available
Ø Components Available
Š Kit Includes Concentric Slave Cylinder
ƒ Kit Includes Flywheel

© 2014 ZF North American Operations, Inc. All Rights Reserved. No portion of this work may be reproduced or copied by any means without the prior approval of ZF North American Operations, Inc.

CLUTCH KIT

Cyl.	CC Cubic Inch	Liter	Year	Application Information	Clutch Kit	Notes Pg.180	Disc Size O.D.	Disc Size I.D.	Disc Size Teeth	PreFilled Master Or System	Master Cylinder	Slave Cylinder	Flywheel
NISSAN / DATSUN (Cont'd)													
210													
4	1237cc	1.2	82-79		KF537-01	63	7 1/8	13/16	18T	*	SH5005	SH6457	*
	1393cc	1.4	82-79		KF537-01	63	7 1/8	13/16	18T	*	SH5005	SH6457	*
	1488cc	1.5	82-79		KF537-01	63	7 1/8	13/16	18T	*	SH5005	SH6457	*
240SX													
4	2389cc	2.4	98-96	(fr. 3/96)	KF594-05		8 7/8	1	24T	*	SH5005	SH6076	NFW5316
			96-91	(to 2/96)	KF594-02	63	8 7/8	1	24T	*	SH5005	SH6076	NFW5316
			90-89		KF594-02	63	8 7/8	1	24T	*	SH5005	SH6012	NFW5316
240Z													
6	2393cc	2.4	73-72	(fr. 7/72)	*					*	SH5157	SH6076	*
			72-70	(to 6/72)	*					*	SH5157	SH6371	*
280Z													
6	2753cc	2.8	78-75	exc. 2+2	KF594-01		8 7/8	1	24T	*	SH5150	SH6076	*
				(fr. 4/75) 2+2	KF618-01	63	9 7/16	1	24T	*	SH5150	SH6076	NFW5301
			75	(to 3/75) 2+2	KF618-01	63	9 7/16	1	24T	*	SH5157	SH6076	NFW5301
280ZX													
6	2753cc	2.8	83-81	Turbo	KF618-01	63	9 7/16	1	24T	*	SH5005	*	NFW5301
			83-79	Non-Turbo, exc. 2+2	KF594-01		8 7/8	1	24T	*	SH5005	SH6076	*
				Non-Turbo, 2+2	KF618-01	63	9 7/16	1	24T	*	SH5005	SH6076	NFW5301
300ZX													
6	2960cc	3.0	96-90	Non-Turbo	KF630-02	55	9 1/2	1	24T	*	SH5361	SH6077	*
				Turbo	KF729-01	46,55	9 7/8	1	24T	*	*	SH6077	*
			89-87	Turbo	KF695-01	63	9 7/8	1	24T	*	SH5005	SH6077	NFW5305
			89-84	Non-Turbo	KF618-01	63	9 7/16	1	24T	*	SH5005	SH6077	*
			86-84	Turbo	KF630-01		9 1/2	1	24T	*	SH5005	SH6077	*
310													
4	1393cc	1.4	80-79		KF597-01 ◎		7 1/2	1	24T	*	SH5005	SH6379	*
	1488cc	1.5	82		KF537-03		7 1/8	13/16	18T	*	*	SH6379	*
			81		KF597-01 ◎		7 1/2	1	24T	*	SH5005	SH6379	*
350Z													
6	3498cc	3.5	09-07		*					*	*	SB60301	*
			06-05		K70358-02		9 7/8	1	24T	*	SH5499	SH6304	*
			04-03		K70358-02		9 7/8	1	24T	*	SH5499	SH6518	*
370Z													
6	3696cc	3.7	14-09		*					*	*	SB60301	*
411													
4	1595cc	1.6	67		KF532-01		7 7/8	1	24T	*	*	*	*
510													
4	1595cc	1.6	73-68		KF532-01		7 7/8	1	24T	*	*	*	*
	1952cc	2.0	81-78		KF587-01		7 7/8	1	24T	*	SH5150	SH6012	*
610													
4	1770cc	1.8	73		KF532-01		7 7/8	1	24T	*	*	SH6076	*
	1952cc	2.0	76-74		KF587-01		7 7/8	1	24T	*	SH5150	SH6176	*
710													
4	1770cc	1.8	74		KF587-01		7 7/8	1	24T	*	*	SH6076	*
	1952cc	2.0	77-75		KF587-01		7 7/8	1	24T	*	SH5150	SH6076	*

◎ Kit Only

* Not Available
Ø Components Available
Š Kit Includes Concentric Slave Cylinder
ƒ Kit Includes Flywheel

© 2014 ZF North American Operations, Inc. All Rights Reserved. No portion of this work may be reproduced or copied by any means without the prior approval of ZF North American Operations, Inc.

SACHS

CLUTCH KIT

Cyl.	CC Cubic Inch	Liter	Year	Application Information	Clutch Kit	Notes Pg.180	Disc Size O.D.	Disc Size I.D.	Disc Size Teeth	PreFilled Master Or System	Master Cylinder	Slave Cylinder	Flywheel
NISSAN / DATSUN (Cont'd)													
810													
6	2393cc	2.4	80-77		KF594-02	56,63	8 7/8	1	24T	*	SH5150	SH6076	*
	2793cc	2.8	81		KF594-02	63	8 7/8	1	24T	*	SH5005	SH6076	*
1200													
4	1171cc	1.2	73-71		KF537-01	63	7 1/8	13/16	18T	*	*	*	*
NISSAN LIGHT TRUCK & VAN													
521 PICKUP													
4	1595cc	1.6	72	(fr. 3/72)	KF532-01		7 7/8	1	24T	*	SH5127	SH6119	*
			72-70	(to 2/72)	KF532-01		7 7/8	1	24T	*	SH5128	SH6120	*
620 PICKUP													
4	1595cc	1.6	73-72	(fr. 3/72)	KF532-01		7 7/8	1	24T	*	SH5127	SH6119	*
			72	(to 2/72)	KF532-01		7 7/8	1	24T	*	SH5128	SH6120	*
	1770cc	1.8	74		KF536-02		8 7/8	1	24T	*	SH5127	SH6121	*
720													
4	1952cc	2.0	86-85	(fr. 11/85) 2WD	KF620-02		9 7/16	1	24T	*	SH5004	SH6088	*
				(fr. 11/85) 4WD	KF620-02		9 7/16	1	24T	*	SH5004	SH6026	*
			85-83	(to 10/85) 2WD	KF620-02		9 7/16	1	24T	*	SH5005	SH6119	*
			80	4WD	KF594-01		8 7/8	1	24T	*	SH5005	SH6121	*
	2187cc	2.2	83-81	4WD	KF594-01		8 7/8	1	24T	*	SH5005	SH6119	*
				2WD	KF594-01		8 7/8	1	24T	*	SH5005	SH6121	*
	2389cc	2.4	86-85	(fr. 11/85) 2WD	KF620-01	63	9 1/2	1	24T	*	SH5004	SH6088	NFW5301
				Optional HD Kit	K70118-01	63	9 1/2	1	24T	*	SH5004	SH6088	NFW5301
				(fr. 11/85) 4WD	KF620-01	63	9 1/2	1	24T	*	SH5004	SH6026	NFW5301
				Optional HD Kit	K70118-01	63	9 1/2	1	24T	*	SH5004	SH6026	NFW5301
			85-83	(to 10/85) 2WD	KF620-01	63	9 1/2	1	24T	*	SH5005	SH6121	NFW5301
				Optional HD Kit	K70118-01	63	9 1/2	1	24T	*	SH5005	SH6121	NFW5301
				(to 10/85) 4WD	KF620-01	63	9 1/2	1	24T	*	SH5005	SH6119	NFW5301
				Optional HD Kit	K70118-01	63	9 1/2	1	24T	*	SH5005	SH6119	NFW5301
	2488cc	2.5	86-83		KF594-02	63	8 7/8	1	24T	*	*	SH6088	NFW5301
AXXESS													
4	2389cc	2.4	91-90	2WD	KF594-04		8 7/8	1	24T	*	SH5082	SH6075	*
				4WD	KF620-03		9 1/2	1	24T	*	SH5082	SH6075	*
CUBE													
4	1798cc	1.8	14-09		K70556-01 Š◎		8 7/8	15/16	21T	*	SH5551	SB60302	DMF91185
D21													
4	2389cc	2.4	94-86	(fr. 11/85) 2WD	KF620-01	63	9 1/2	1	24T	*	SH5004	SH6088	NFW5301
				Optional HD Kit	K70118-01	63	9 1/2	1	24T	*	SH5004	SH6088	NFW5301
				(fr. 11/85) 4WD	KF620-01	63	9 1/2	1	24T	*	SH5004	SH6026	NFW5301
				Optional HD Kit	K70118-01	63	9 1/2	1	24T	*	SH5004	SH6026	NFW5301
			86	(to 10/85)	KF620-01	63	9 1/2	1	24T	*	SH5005	SH6121	NFW5301
				Optional HD Kit	K70118-01	63	9 1/2	1	24T	*	SH5005	SH6121	NFW5301
6	2960cc	3.0	94-86		KF695-01	63	9 7/8	1	24T	*	SH5004	SH6026	NFW5305
FRONTIER													
4	2389cc	2.4	04-99	(fr. 4/99)	KF620-06		9 1/2	1	24T	*	SH5252	SH6077	NFW5301
			99-98	(to 4/99)	KF620-05		9 1/2	1	24T	*	SH5252	SH6077	NFW5301

◎ Kit Only

* Not Available
Ø Components Available
Š Kit Includes Concentric Slave Cylinder
ƒ Kit Includes Flywheel

© 2014 ZF North American Operations, Inc. All Rights Reserved. No portion of this work may be reproduced or copied by any means without the prior approval of ZF North American Operations, Inc.

CLUTCH KIT

Cyl.	CC Cubic Inch	Liter	Year	Application Information	Clutch Kit	Notes Pg.180	Disc Size O.D.	Disc Size I.D.	Disc Size Teeth	PreFilled Master Or System	Master Cylinder	Slave Cylinder	Flywheel
NISSAN LIGHT TRUCK & VAN (Cont'd)													
FRONTIER (Cont'd)													
4	2500cc	2.5	14-05		K70426-01 ◎		9 1/2	1	24T	*	SH5325	SH6306	*
6	3275cc	3.3	04-01	Supercharged	K70425-01 ◎		9 13/16	1	24T	*	SH5252	SH6077	*
			04-99	exc. Supercharged	KF695-03		9 7/8	1	24T	*	SH5252	SH6077	NFW5305
	3954cc	4.0	14-05		K70427-01 ◎		10 1/4	1	24T	*	SH5326	SH6307	*
JUKE													
4	1618cc	1.6	14-11	Turbo	*					*	SH5551	SB60302	*
PATHFINDER													
4	2389cc	2.4	88-87		KF620-01	63	9 1/2	1	24T	*	SH5004	SH6026	NFW5301
				Optional HD Kit	K70118-01	63	9 1/2	1	24T	*	SH5004	SH6026	NFW5301
6	2960cc	3.0	95-87		KF695-01	63	9 7/8	1	24T	*	SH5004	SH6026	NFW5305
	3275cc	3.3	00		KF695-03		9 7/8	1	24T	*	SH5250	SH6077	NFW5305
			99-97		KF695-02		9 7/8	1	24T	*	SH5250	SH6077	NFW5305
			96		KF695-01	63	9 7/8	1	24T	*	SH5250	SH6077	NFW5305
	3498cc	3.5	02-01		K70308-02 ◎		9 7/8	1	24T	*	SH5253	SH6214	*
PICKUP													
4	2389cc	2.4	97-96	(fr. 1/96) 2WD	KF620-05		9 1/2	1	24T	*	*	SH6088	NFW5301
				(fr. 1/96) 4WD	KF620-05		9 1/2	1	24T	*	*	SH6026	NFW5301
			96-95	(to 1/96) 2WD	KF620-01	63	9 1/2	1	24T	*	SH5004	SH6088	NFW5301
				Optional HD Kit	K70118-01	63	9 1/2	1	24T	*	SH5004	SH6088	NFW5301
				(to 1/96) 4WD	KF620-01	63	9 1/2	1	24T	*	SH5004	SH6026	NFW5301
				Optional HD Kit	K70118-01	63	9 1/2	1	24T	*	SH5004	SH6026	NFW5301
6	2960cc	3.0	96-95		KF695-01	63	9 7/8	1	24T	*	SH5004	SH6026	NFW5305
VAN													
4	2389cc	2.4	88-87		KF594-02	63	8 7/8	1	24T	*	SH5131	SH6076	*
XTERRA													
4	2389cc	2.4	04-00		KF620-06		9 1/2	1	24T	*	SH5252	SH6077	NFW5301
6	3275cc	3.3	04-02	Supercharged	K70425-01 ◎		9 13/16	1	24T	*	SH5252	SH6077	*
			04-00	exc. Supercharged	KF695-03		9 7/8	1	24T	*	SH5252	SH6077	NFW5305
	3954cc	4.0	14-05		K70427-01 ◎		10 1/4	1	24T	*	SH5326	SH6307	*
NISSAN MEDIUM TRUCK													
1100													
4	3458cc	3.5	91-89		K70325-01		10 3/16	1	24T	*	*	*	*
1200													
6	4621cc	4.6	04-99		K70326-01		11 3/4	1	24T	*	*	*	*
1300													
6	4162cc	4.2	93-92	TD42T eng.	K70325-01		10 3/16	1	24T	*	*	*	*
1400													
6	4162cc	4.2	98-95	TD42TI eng.	K70326-01		11 3/4	1	24T	*	*	*	*
			94	TD42T eng.	K70325-01		10 3/16	1	24T	*	*	*	*
	4621cc	4.6	04-99		K70326-01		11 3/4	1	24T	*	*	*	*
1800													
6	282"	4.6	04-99		K70327-01		12 3/4	1 3/16	16T	*	*	*	*
	6932cc	6.9	04-89	Turbo, 13 3/4" Clutch	K70328-01	2	13 3/4	1 1/2	10T	*	*	*	*
			00-89	Turbo, 15" Clutch	K70329-01	2	15	1 3/4	10T	*	*	*	*

◎ Kit Only

* Not Available
Ø Components Available
Š Kit Includes Concentric Slave Cylinder
ƒ Kit Includes Flywheel

© 2014 ZF North American Operations, Inc. All Rights Reserved. No portion of this work may be reproduced or copied by any means without the prior approval of ZF North American Operations, Inc.

SACHS

CLUTCH KIT

Cyl.	CC Cubic Inch	Liter	Year	Application Information	Clutch Kit	Notes Pg.180	Disc Size O.D.	Disc Size I.D.	Disc Size Teeth	PreFilled Master Or System	Master Cylinder	Slave Cylinder	Flywheel
NISSAN MEDIUM TRUCK (Cont'd)													
2000													
6	6932cc	6.9	04-89	Turbo, 13 3/4" Clutch	K70328-01	2	13 3/4	1 1/2	10T	*	*	*	*
				Turbo, 15" Clutch	K70329-01	2	15	1 3/4	10T	*	*	*	*
2300													
6	6932cc	6.9	04-89	13 3/4" Clutch	K70328-01	2	13 3/4	1 1/2	10T	*	*	*	*
				15" Clutch	K70329-01	2	15	1 3/4	10T	*	*	*	*
2600													
6	6932cc	6.9	04-89	13 3/4" Clutch	K70328-01	2	13 3/4	1 1/2	10T	*	*	*	*
				15" Clutch	K70329-01	2	15	1 3/4	10T	*	*	*	*
2800													
6	6932cc	6.9	94-89		K70328-01	2	13 3/4	1 1/2	10T	*	*	*	*
3000													
6	6932cc	6.9	00-92	13 3/4" Clutch	K70328-01	2	13 3/4	1 1/2	10T	*	*	*	*
				15" Clutch	K70329-01	2	15	1 3/4	10T	*	*	*	*
	7407cc	7.4	94-92		K70329-02	2	15	1 5/8	10T	*	*	*	*
			91-89		K70328-02	2	15	1 5/8	10T	*	*	*	*
3300													
6	6932cc	6.9	04-99	13 3/4" Clutch	K70328-01	2	13 3/4	1 1/2	10T	*	*	*	*
				15" Clutch	K70329-01	2	15	1 3/4	10T	*	*	*	*
	7407cc	7.4	94-89		K70329-02	2	15	1 5/8	10T	*	*	*	*
550T													
6	7407cc	7.4	91-89		K70329-02	2	15	1 5/8	10T	*	*	*	*
600T													
6	7407cc	7.4	94-92		K70329-02	2	15	1 5/8	10T	*	*	*	*
DIESEL TRUCK													
6	6932cc	6.9	87-86	FE6 eng.	K31570-01	2	12 3/4	1 3/16	16T	*	*	*	*
OLDSMOBILE													
ACHIEVA													
4	138"	2.3	95		K70163-01 Š	52	8 7/8	1	14T	*	SH5042	SB60310	*
			94-93	DOHC	K0059-03 Š	52	9 1/8	1	14T	*	SH5042	SB60082	*
			94-92	SOHC	K70083-01	27	9 1/8	1	14T	*	*	*	*
			92	DOHC	K0059-01	29	9 1/8	1	14T	*	*	*	*
	146"	2.4	97-96		K70163-01 Š	52	8 7/8	1	14T	*	SH5042	SB60310	*
ALERO													
4	134"	2.2	04-02		K70330-01 Š◎		8 13/16	1	14T	*	SH5423	SB60139	NFW9123
	146"	2.4	01-00		K70258-01 Š		8 7/8	1	14T	*	SH5423	SB60139	*
CUTLASS													
6	231"	3.8	81-79		K1675-10	28	10 1/2	1 1/8	10T	*	*	*	*
			78		K1874-02	28	10 1/2	1 1/8	10T	*	*	*	*
			77		K1874-06	28	10	1 1/8	10T	*	*	*	*
	250"	4.1	71-68		K1874-06	28	10	1 1/8	10T	*	*	*	*
8	260"	4.3	80		K1874-02		10 1/2	1 1/8	10T	*	*	*	*
			79-75	3 Spd.	K1874-06	28	10	1 1/8	10T	*	*	*	*
	305"	5.0	79		K1675-10	28	10 1/2	1 1/8	10T	*	*	*	*
			78		K1874-02	28	10 1/2	1 1/8	10T	*	*	*	*
	330"	5.4	67-64	10 1/2" Clutch	K1874-02	28	10 1/2	1 1/8	10T	*	*	*	*

◎ Kit Only

* Not Available
Ø Components Available
Š Kit Includes Concentric Slave Cylinder
ƒ Kit Includes Flywheel

© 2014 ZF North American Operations, Inc. All Rights Reserved. No portion of this work may be reproduced or copied by any means without the prior approval of ZF North American Operations, Inc.

CLUTCH KIT

Cyl.	CC Cubic Inch	Liter	Year	Application Information	Clutch Kit	Notes Pg.180	Disc Size O.D.	Disc Size I.D.	Disc Size Teeth	PreFilled Master Or System	Master Cylinder	Slave Cylinder	Flywheel
OLDSMOBILE (Cont'd)													
CUTLASS (Cont'd)													
8	350"	5.7	73-71	4 Spd., 2 bbl.	K1874-01	28	10 3/8	1 1/8	26T	*	*	*	*
				4 Spd., 4 bbl., 10 1/2" Clutch	K1675-21	28	10 1/2	1 1/8	26T	*	*	*	*
				Optional Power Clutch Kit	PC1675-21	28	10 1/2	1 1/8	26T	*	*	*	*
			73-69	3 Spd., 4 bbl.	K1675-10		10 1/2	1 1/8	10T	*	*	*	*
			73-68	3 Spd., 2 bbl.	K1874-02	28	10 1/2	1 1/8	10T	*	*	*	*
CUTLASS CALAIS													
4	138"	2.3	91-88	QUAD 4	K0059-01	29	9 1/8	1	14T	*	SH5087	SH6040	*
6	231"	3.8	81		K1675-10	28	10 1/2	1 1/8	10T	*	*	*	*
			79		K1675-10	28	10 1/2	1 1/8	10T	*	*	*	*
			78		K1874-02	28	10 1/2	1 1/8	10T	*	*	*	*
8	260"	4.3	79-78		K1874-06	28	10	1 1/8	10T	*	*	*	*
	305"	5.0	79		K1675-10	28	10 1/2	1 1/8	10T	*	*	*	*
			78		K1874-02	28	10 1/2	1 1/8	10T	*	*	*	*
CUTLASS CIERA													
4	151"	2.5	84		K1914-01		9 1/8	1	14T	*	*	*	*
CUTLASS CRUISER													
6	231"	3.8	81		K1675-10	28	10 1/2	1 1/8	10T	*	*	*	*
CUTLASS SALON													
6	231"	3.8	81-79		K1675-10	28	10 1/2	1 1/8	10T	*	*	*	*
			78		K1874-02	28	10 1/2	1 1/8	10T	*	*	*	*
8	260"	4.3	80		K1874-02		10 1/2	1 1/8	10T	*	*	*	*
			79-77		K1874-06	28	10	1 1/8	10T	*	*	*	*
			76-75	3 Spd.	K1874-06	28	10	1 1/8	10T	*	*	*	*
	305"	5.0	79		K1675-10	28	10 1/2	1 1/8	10T	*	*	*	*
			78		K1874-02	28	10 1/2	1 1/8	10T	*	*	*	*
CUTLASS SUPREME													
4	138"	2.3	90	Quad 4	K0059-01	29	9 1/8	1	14T	*	SH5087	SH6040	*
6	173"	2.8	89-88		K0059-01	29	9 1/8	1	14T	*	SH5087	SH6040	NFW1006
	207"	3.4	94-91	Pull Type	K70045-01 ◎		9 11/16	1	23T	*	*	SH6152	NFW1025
	231"	3.8	81		K1675-10	28	10 1/2	1 1/8	10T	*	*	*	*
			79		K1675-10	28	10 1/2	1 1/8	10T	*	*	*	*
			78		K1874-02	28	10 1/2	1 1/8	10T	*	*	*	*
			77		K1874-06	28	10	1 1/8	10T	*	*	*	*
	250"	4.1	76-75		K1874-06	28	10	1 1/8	10T	*	*	*	*
8	260"	4.3	79-77		K1874-06	28	10	1 1/8	10T	*	*	*	*
			76-75	3 Spd.	K1874-06	28	10	1 1/8	10T	*	*	*	*
	305"	5.0	79		K1675-10	28	10 1/2	1 1/8	10T	*	*	*	*
			78		K1874-02	28	10 1/2	1 1/8	10T	*	*	*	*
	330"	5.4	67	10 1/2" Clutch	K1874-02	28	10 1/2	1 1/8	10T	*	*	*	*
	350"	5.7	73-71	4 Spd., 2 bbl.	K1874-01	28	10 3/8	1 1/8	26T	*	*	*	*
				4 Spd., 4 bbl., 10 1/2" Clutch	K1675-21	28	10 1/2	1 1/8	26T	*	*	*	*
				Optional Power Clutch Kit	PC1675-21	28	10 1/2	1 1/8	26T	*	*	*	*
			73-69	3 Spd., 4 bbl.	K1675-10		10 1/2	1 1/8	10T	*	*	*	*
			73-68	3 Spd., 2 bbl.	K1874-02	28	10 1/2	1 1/8	10T	*	*	*	*

◎ Kit Only

* Not Available
Ø Components Available
Š Kit Includes Concentric Slave Cylinder
ƒ Kit Includes Flywheel

© 2014 ZF North American Operations, Inc. All Rights Reserved. No portion of this work may be reproduced or copied by any means without the prior approval of ZF North American Operations, Inc.

SACHS

CLUTCH KIT

Cyl.	CC Cubic Inch	Liter	Year	Application Information	Clutch Kit	Notes Pg.180	Disc Size O.D.	Disc Size I.D.	Disc Size Teeth	PreFilled Master Or System	Master Cylinder	Slave Cylinder	Flywheel
OLDSMOBILE (Cont'd)													
CUTLASS TIARA													
8	260"	4.3	76	3 Spd.	K1874-06	28	10	1 1/8	10T	*	*	*	*
DELMONT 88													
8	330"	5.4	67	10 1/2" Clutch	K1874-02	28	10 1/2	1 1/8	10T	*	*	*	*
	350"	5.7	68	3 Spd., 2 bbl.	K1874-02	28	10 1/2	1 1/8	10T	*	*	*	*
DELTA 88													
8	330"	5.4	67	10 1/2" Clutch	K1874-02	28	10 1/2	1 1/8	10T	*	*	*	*
	350"	5.7	73-71	4 Spd., 2 bbl.	K1874-01	28	10 3/8	1 1/8	26T	*	*	*	*
				4 Spd., 4 bbl., 10 1/2" Clutch	K1675-21	28	10 1/2	1 1/8	26T	*	*	*	*
				Optional Power Clutch Kit	PC1675-21	28	10 1/2	1 1/8	26T	*	*	*	*
			73-69	3 Spd., 4 bbl.	K1675-10		10 1/2	1 1/8	10T	*	*	*	*
			73-68	3 Spd., 2 bbl.	K1874-02	28	10 1/2	1 1/8	10T	*	*	*	*
	425"	7.0	66-65	10 1/2" Clutch	K1510-02	2	10 1/2	1 1/8	10T	*	*	*	*
				Optional Kit/Diaph. Cover	K1675-10		10 1/2	1 1/8	10T	*	*	*	*
DYNAMIC													
8	425"	7.0	66-65	10 1/2" Clutch	K1510-02	2	10 1/2	1 1/8	10T	*	*	*	*
				Optional Kit/Diaph. Cover	K1675-10		10 1/2	1 1/8	10T	*	*	*	*
FIRENZA													
4	112"	1.8	86	5 Spd., Replaces O.E. 8" Clutch	K0034-02	27	8 1/2	1	14T	*	SH5039	*	*
			84-83	5 Spd., Replaces O.E. 8" Clutch	K0034-02	27	8 1/2	1	14T	*	SH5039	*	*
			83	4 Spd.	K0034-01		8 1/2	1	14T	*	*	*	*
			82	4 Spd.	K1914-01	1	9 1/8	1	14T	*	*	*	NFW1006
	121"	2.0	87	4 Spd., M19 trans.	K1914-01		9 1/8	1	14T	*	SH5040	*	NFW1006
			86-85	4 Spd.	K1914-01	1	9 1/8	1	14T	*	SH5039	*	NFW1006
			84-83	4 Spd.	K1914-01	1	9 1/8	1	14T	*	*	*	NFW1006
	122"	2.0	88-87	5 Spd.	K0034-03	27,36	8	1	14T	*	SH5040	*	NFW1006
6	173"	2.8	87	5 Spd.	K0059-01	29	9 1/8	1	14T	*	SH5040	*	NFW1006
			86-85		K1914-01		9 1/8	1	14T	*	SH5039	*	NFW1006
F85													
8	330"	5.4	67-64	10 1/2" Clutch	K1874-02	28	10 1/2	1 1/8	10T	*	*	*	*
	350"	5.7	72-71	4 Spd., 2 bbl.	K1874-01	28	10 3/8	1 1/8	26T	*	*	*	*
				4 Spd., 4 bbl., 10 1/2" Clutch	K1675-21	28	10 1/2	1 1/8	26T	*	*	*	*
				Optional Power Clutch Kit	PC1675-21	28	10 1/2	1 1/8	26T	*	*	*	*
			72-69	3 Spd., 4 bbl.	K1675-10		10 1/2	1 1/8	10T	*	*	*	*
			72-68	3 Spd., 2 bbl.	K1874-02	28	10 1/2	1 1/8	10T	*	*	*	*
JETSTAR 88													
8	330"	5.4	66-64	10 1/2" Clutch	K1874-02	28	10 1/2	1 1/8	10T	*	*	*	*
	425"	7.0	65	10 1/2" Clutch	K1510-02	2	10 1/2	1 1/8	10T	*	*	*	*
				Optional Kit/Diaph. Cover	K1675-10		10 1/2	1 1/8	10T	*	*	*	*
JETSTAR I													
8	425"	7.0	65	10 1/2" Clutch	K1510-02	2	10 1/2	1 1/8	10T	*	*	*	*
				Optional Kit/Diaph. Cover	K1675-10		10 1/2	1 1/8	10T	*	*	*	*
OMEGA													
4	151"	2.5	84-80	Replaces O.E. 9 11/16" Clutch	K1914-01	28	9 1/8	1	14T	*	*	*	*
6	173"	2.8	84-80	Replaces O.E. 9 11/16" Clutch	K1914-01	28	9 1/8	1	14T	*	*	*	*
	231"	3.8	79		K1675-10	28	10 1/2	1 1/8	10T	*	*	*	*

* Not Available
Ø Components Available
Š Kit Includes Concentric Slave Cylinder
ƒ Kit Includes Flywheel

© 2014 ZF North American Operations, Inc. All Rights Reserved. No portion of this work may be reproduced or copied by any means without the prior approval of ZF North American Operations, Inc.

CLUTCH KIT

Cyl.	CC Cubic Inch	Liter	Year	Application Information	Clutch Kit	Notes Pg.180	Disc Size O.D.	Disc Size I.D.	Disc Size Teeth	PreFilled Master Or System	Master Cylinder	Slave Cylinder	Flywheel
OLDSMOBILE (Cont'd)													
OMEGA (Cont'd)													
6	231"	3.8	78		K1874-02	28	10 1/2	1 1/8	10T	*	*	*	*
			77		K1874-05	28	10	1 1/8	10T	*	*	*	*
	250"	4.1	76-73		K1874-06	28	10	1 1/8	10T	*	*	*	*
8	260"	4.3	77		K1874-02		10 1/2	1 1/8	10T	*	*	*	*
			76-75		K1874-06	28	10	1 1/8	10T	*	*	*	*
	305"	5.0	79		K1675-10	28	10 1/2	1 1/8	10T	*	*	*	*
			78-77		K1874-02	28	10 1/2	1 1/8	10T	*	*	*	*
	350"	5.7	73	4 Spd., 2 bbl.	K1874-01	28	10 3/8	1 1/8	26T	*	*	*	*
				4 Spd., 4 bbl., 10 1/2" Clutch	K1675-21	28	10 1/2	1 1/8	26T	*	*	*	*
				Optional Power Clutch Kit	PC1675-21	28	10 1/2	1 1/8	26T	*	*	*	*
				3 Spd., 4 bbl.	K1675-10		10 1/2	1 1/8	10T	*	*	*	*
				3 Spd., 2 bbl.	K1874-02	28	10 1/2	1 1/8	10T	*	*	*	*
STARFIRE													
4	140"	2.3	77-76		K1878-02	28	9 1/8	1 1/8	10T	*	*	*	*
	151"	2.5	80-78		K1878-02	28	9 1/8	1 1/8	10T	*	*	*	*
6	231"	3.8	80-79		K1675-10		10 1/2	1 1/8	10T	*	*	*	*
			78-77		K1878-02	28	9 1/8	1 1/8	10T	*	*	*	*
			76-75	exc. 4 Spd.	K1874-05	28	10	1 1/8	10T	*	*	*	*
8	305"	5.0	79		K1675-10		10 1/2	1 1/8	10T	*	*	*	*
	425"	7.0	66-65	10 1/2" Clutch	K1510-02	2	10 1/2	1 1/8	10T	*	*	*	*
				Optional Kit/Diaph. Cover	K1675-10		10 1/2	1 1/8	10T	*	*	*	*
VISTA CRUISER													
6	225"	3.7	65-64	10" Clutch	K1874-06	28	10	1 1/8	10T	*	*	*	*
			64	10 1/2" Clutch	K1874-02		10 1/2	1 1/8	10T	*	*	*	*
8	330"	5.4	67-64	10 1/2" Clutch	K1874-02	28	10 1/2	1 1/8	10T	*	*	*	*
	350"	5.7	73-71	4 Spd., 2 bbl.	K1874-01	28	10 3/8	1 1/8	26T	*	*	*	*
				4 Spd., 4 bbl., 10 1/2" Clutch	K1675-21	28	10 1/2	1 1/8	26T	*	*	*	*
				Optional Power Clutch Kit	PC1675-21	28	10 1/2	1 1/8	26T	*	*	*	*
			73-69	3 Spd., 4 bbl.	K1675-10		10 1/2	1 1/8	10T	*	*	*	*
			73-68	3 Spd., 2 bbl.	K1874-02	28	10 1/2	1 1/8	10T	*	*	*	*
442													
8	350"	5.7	70-69	3 Spd., 4 bbl.	K1675-10		10 1/2	1 1/8	10T	*	*	*	*
			70-68	3 Spd., 2 bbl.	K1874-02	28	10 1/2	1 1/8	10T	*	*	*	*
OPEL													
ISUZU													
4	1816cc	1.8	76		KF583-03		7 7/8	1	24T	*	*	*	*
PEUGEOT													
404													
4	1618cc	1.6	67		KF211-01 ◎		8 1/2	1 5/32	10T	*	*	*	*
405													
4	1905cc	1.9	91-89	8 Valve	KF781-01		7 7/8	13/16	18T	*	*	*	*
				16-Valve	KF780-01 ◎		7 7/8	13/16	18T	*	*	*	*
504													
4	1796cc	1.8	70		KF211-01 ◎		8 1/2	1 5/32	10T	*	*	*	*

◎ Kit Only

* Not Available
Ø Components Available
Š Kit Includes Concentric Slave Cylinder
ƒ Kit Includes Flywheel

© 2014 ZF North American Operations, Inc. All Rights Reserved. No portion of this work may be reproduced or copied by any means without the prior approval of ZF North American Operations, Inc.

SACHS

CLUTCH KIT

Cyl.	CC Cubic Inch	Liter	Year	Application Information	Clutch Kit	Notes Pg.180	Disc Size O.D.	Disc Size I.D.	Disc Size Teeth	PreFilled Master Or System	Master Cylinder	Slave Cylinder	Flywheel
PEUGEOT (Cont'd)													
504 (Cont'd)													
4	1971cc	2.0	79-71		KF211-01 ◎		8 1/2	1 5/32	10T	*	*	*	*
	2112cc	2.1	76-74		KF211-01 ◎		8 1/2	1 5/32	10T	*	*	*	*
	2304cc	2.3	83-77		KF211-01 ◎		8 1/2	1 5/32	10T	*	*	*	*
505													
4	1971cc	2.0	87-80		KF211-01 ◎		8 1/2	1 5/32	10T	*	*	*	*
	2165cc	2.2	91-87	Non-Turbo	KF211-01 ◎		8 1/2	1 5/32	10T	*	*	*	*
	2304cc	2.3	83-80	Non-Turbo	KF211-01 ◎		8 1/2	1 5/32	10T	*	*	*	*
PLYMOUTH													
ACCLAIM													
4	153"	2.5	93-91	Non-Turbo	K0066-03		9 1/8	15/16	17T	*	*	*	*
				Optional HD Kit	K70067-01		9 1/8	15/16	17T	*	*	*	*
			90-89	incl. Turbo	K0066-07		9	13/16	18T	*	*	*	*
ARROW													
4	97"	1.6	80-76	(fr. 11/75)	KF621-05		7 7/8	7/8	20T	*	*	*	*
	122"	2.0	77-76	(fr. 11/75)	KF591-01		8 1/2	7/8	20T	*	*	*	NFW5105
	156"	2.6	80-79		KF685-03		8 7/8	1	23T	*	*	*	NFW5102
BARRACUDA													
6	170"	2.8	66	10" Clutch	K1525-01	2	10	1	23T	*	*	*	*
	198"	3.2	71-70	10" Clutch	K1525-01	2	10	1	23T	*	*	*	*
	225"	3.7	72-64	10" Clutch	K1525-01	2	10	1	23T	*	*	*	*
8	273"	4.5	67-64		K1506L-02	2	10 1/2	1	23T	*	*	*	*
				Optional Kit/Diaph. Cover	K1675-03		10 1/2	1	23T	*	*	*	*
	318"	5.2	74-68	10 1/2" Clutch	K1506L-02	2	10 1/2	1	23T	*	*	*	*
				Optional Kit/Diaph. Cover	K1675-03		10 1/2	1	23T	*	*	*	*
			68	10" Clutch	K1525-01	2	10	1	23T	*	*	*	*
	340"	5.6	73-72		K1506L-02	2	10 1/2	1	23T	*	*	*	*
				Optional Kit/Diaph. Cover	K1675-03		10 1/2	1	23T	*	*	*	*
			69-68		K1506L-02	2	10 1/2	1	23T	*	*	*	*
				Optional Kit/Diaph. Cover	K1675-03		10 1/2	1	23T	*	*	*	*
	360"	5.9	74	10 1/2" Clutch	K1675-03		10 1/2	1	23T	*	*	*	*
				11" Clutch	K1858-05	2	11	1	23T	*	*	*	*
	361"	5.9	64		K1506L-02	2	10 1/2	1	23T	*	*	*	*
				Optional Kit/Diaph. Cover	K1675-03		10 1/2	1	23T	*	*	*	*
	383"	6.3	71-67	10 1/2" Clutch	K1506L-02	2	10 1/2	1	23T	*	*	*	*
				Optional Kit/Diaph. Cover	K1675-03		10 1/2	1	23T	*	*	*	*
			69-68	11" Clutch	K1877-06		11	1	23T	*	*	*	*
				Optional Kit/HD Disc	K1877-06HD		11	1	23T	*	*	*	*
BELVEDERE													
6	225"	3.7	70-60	10" Clutch	K1525-01	2	10	1	23T	*	*	*	*
8	273"	4.5	68-67		K1675-03		10 1/2	1	23T	*	*	*	*
			66-65		K1506L-02	2	10 1/2	1	23T	*	*	*	*
	318"	5.2	70-61	10 1/2" Clutch	K1675-03		10 1/2	1	23T	*	*	*	*
			68	10" Clutch	K1525-01	2	10	1	23T	*	*	*	*
	361"	5.9	66		K1506L-02	2	10 1/2	1	23T	*	*	*	*
				Optional Kit/Diaph. Cover	K1675-03		10 1/2	1	23T	*	*	*	*

◎ Kit Only

* Not Available
Ø Components Available
Š Kit Includes Concentric Slave Cylinder
ƒ Kit Includes Flywheel

© 2014 ZF North American Operations, Inc. All Rights Reserved. No portion of this work may be reproduced or copied by any means without the prior approval of ZF North American Operations, Inc.

CLUTCH KIT

Cyl.	CC Cubic Inch	Liter	Year	Application Information	Clutch Kit	Notes Pg.180	Disc Size O.D.	Disc Size I.D.	Disc Size Teeth	PreFilled Master Or System	Master Cylinder	Slave Cylinder	Flywheel
PLYMOUTH (Cont'd)													
BELVEDERE (Cont'd)													
8	383"	6.3	70-63	10 1/2" Clutch	K1506L-02	2	10 1/2	1	23T	*	*	*	*
				Optional Kit/Diaph. Cover	K1675-03		10 1/2	1	23T	*	*	*	*
			69-68	11" Clutch	K1877-06		11	1	23T	*	*	*	*
				Optional Kit/HD Disc	K1877-06HD		11	1	23T	*	*	*	*
	426"	7.0	67-63	10 1/2" Clutch	K1506L-02	2	10 1/2	1	23T	*	*	*	*
				Optional Kit/Diaph. Cover	K1675-03		10 1/2	1	23T	*	*	*	*
BELVEDERE II													
6	225"	3.7	67-65	10" Clutch	K1525-01	2	10	1	23T	*	*	*	*
8	273"	4.5	67		K1675-03		10 1/2	1	23T	*	*	*	*
			66-65		K1506L-02	2	10 1/2	1	23T	*	*	*	*
	318"	5.2	67-65		K1675-03		10 1/2	1	23T	*	*	*	*
	361"	5.9	66		K1506L-02	2	10 1/2	1	23T	*	*	*	*
				Optional Kit/Diaph. Cover	K1675-03		10 1/2	1	23T	*	*	*	*
	383"	6.3	67-65		K1506L-02	2	10 1/2	1	23T	*	*	*	*
				Optional Kit/Diaph. Cover	K1675-03		10 1/2	1	23T	*	*	*	*
	426"	7.0	67-65		K1506L-02	2	10 1/2	1	23T	*	*	*	*
				Optional Kit/Diaph. Cover	K1675-03		10 1/2	1	23T	*	*	*	*
BREEZE													
4	122"	2.0	00-96		K70131-01 ƒ◎	10	9	15/16	17T	*	*	*	*
				Optional Power Clutch Kit	PC70131-01 ƒ◎	10	9	15/16	17T	*	*	*	*
CHAMP													
4	86"	1.4	82-79	8T/M	KF600-02		7 1/4	7/8	20T	*	*	*	NFW5106
				Hatchback	KF621-03		7 7/8	7/8	20T	*	*	*	NFW5106
	97"	1.6	82-79	Hatchback	KF600-02		7 1/4	7/8	20T	*	*	*	*
COLT													
4	90"	1.5	94-85	5 Spd., Hydraulic Linkage	KF600-02		7 1/4	7/8	20T	*	SH5052	SH6048	NFW5106
	98"	1.6	90-89	5 Spd.	K0107-01		8 1/2	7/8	20T	*	*	SH6048	*
	107"	1.8	90-89		K0107-01		8 1/2	7/8	20T	*	SH5052	SH6046	*
	112"	1.8	94-93		K0107-01		8 1/2	7/8	20T	*	*	SH6046	*
	122"	2.0	78-76		KF591-03		8 1/2	7/8	20T	*	*	*	*
	156"	2.6	80-78		KF685-03		8 7/8	1	23T	*	*	*	*
COLT VISTA													
4	112"	1.8	94-92		K0107-01		8 1/2	7/8	20T	*	*	SH6046	*
	122"	2.0	91	4WD, 5 Spd.	K0107-01		8 1/2	7/8	20T	*	SH5051	SH6049	*
			91-90	FWD	K0107-01		8 1/2	7/8	20T	*	SH5051	SH6048	*
			89-87	(fr. 12/86) FWD, Cable Linkage	K0107-01		8 1/2	7/8	20T	*	*	*	*
				(fr. 12/86) FWD, Hydraulic Linkage	K0107-01		8 1/2	7/8	20T	*	SH5051	SH6048	*
			89-85	4WD, 5 Spd.	K0107-01		8 1/2	7/8	20T	*	SH5051	SH6049	*
			87-84	(to 11/86) FWD, 5 Spd.	KF621-03		7 7/8	7/8	20T	*	SH5051	SH6049	*
	143"	2.4	94-92		KF735-01		8 7/8	7/8	20T	*	*	SH6046	*
CRICKET (PUERTO RICO)													
4	98"	1.6	77-76		KF621-05		7 7/8	7/8	20T	*	*	*	*
	122"	2.0	77-76		KF591-04		8 1/2	1	23T	*	*	*	*

◎ Kit Only

* Not Available
Ø Components Available
Š Kit Includes Concentric Slave Cylinder
ƒ Kit Includes Flywheel

© 2014 ZF North American Operations, Inc. All Rights Reserved. No portion of this work may be reproduced or copied by any means without the prior approval of ZF North American Operations, Inc.

SACHS

CLUTCH KIT

Cyl.	CC Cubic Inch	Liter	Year	Application Information	Clutch Kit	Notes Pg.180	Disc Size O.D.	Disc Size I.D.	Disc Size Teeth	PreFilled Master Or System	Master Cylinder	Slave Cylinder	Flywheel
PLYMOUTH (Cont'd)													
CUDA													
8	318"	5.2	74-72	Lever Cover	K1506L-02	2	10 1/2	1	23T	*	*	*	*
				Diaph. Cover	K1675-03		10 1/2	1	23T	*	*	*	*
	340"	5.6	73-70	Lever Cover	K1506L-02	2	10 1/2	1	23T	*	*	*	*
				Diaph. Cover	K1675-03		10 1/2	1	23T	*	*	*	*
	360"	5.9	74	10 1/2" Clutch	K1675-03		10 1/2	1	23T	*	*	*	*
				11" Clutch	K1858-05	2	11	1	23T	*	*	*	*
	383"	6.3	71-70		K1506L-02	2	10 1/2	1	23T	*	*	*	*
				Optional Kit/Diaph. Cover	K1675-03		10 1/2	1	23T	*	*	*	*
	426"	7.0	71-70		K1506L-02	2	10 1/2	1	23T	*	*	*	*
				Optional Kit/Diaph. Cover	K1675-03		10 1/2	1	23T	*	*	*	*
DUSTER													
6	198"	3.2	74-70	10" Clutch	K1525-01	2	10	1	23T	*	*	*	*
	225"	3.7	76-70	10" Clutch	K1525-01	2	10	1	23T	*	*	*	*
8	318"	5.2	76-70	10 1/2" Clutch	K1675-03		10 1/2	1	23T	*	*	*	*
			74-72	Lever Cover	K1506L-02	2	10 1/2	1	23T	*	*	*	*
	340"	5.6	73-70		K1506L-02	2	10 1/2	1	23T	*	*	*	*
				Optional Kit/Diaph. Cover	K1675-03		10 1/2	1	23T	*	*	*	*
	360"	5.9	76-74	10 1/2" Clutch	K1675-03		10 1/2	1	23T	*	*	*	*
			75-74	11" Clutch	K1858-05	2	11	1	23T	*	*	*	*
FURY													
6	225"	3.7	78-75	10" Clutch	K1525-01	2	10	1	23T	*	*	*	*
			71-68	10" Clutch	K1525-01	2	10	1	23T	*	*	*	*
			61-60	10" Clutch	K1525-01	2	10	1	23T	*	*	*	*
8	273"	4.5	65		K1506L-02	2	10 1/2	1	23T	*	*	*	*
	318"	5.2	78-75		K1675-03		10 1/2	1	23T	*	*	*	*
			73-72	Lever Cover	K1506L-02	2	10 1/2	1	23T	*	*	*	*
			73-64	10 1/2" Clutch, Diaph. Cover	K1675-03		10 1/2	1	23T	*	*	*	*
			68	10" Clutch	K1525-01	2	10	1	23T	*	*	*	*
			61		K1675-03		10 1/2	1	23T	*	*	*	*
	360"	5.9	78-71	10 1/2" Clutch	K1675-03		10 1/2	1	23T	*	*	*	*
			75-74	11" Clutch	K1858-05	2	11	1	23T	*	*	*	*
	361"	5.9	66-63		K1506L-02	2	10 1/2	1	23T	*	*	*	*
				Optional Kit/Diaph. Cover	K1675-03		10 1/2	1	23T	*	*	*	*
	383"	6.3	71-63	10 1/2" Clutch	K1506L-02	2	10 1/2	1	23T	*	*	*	*
				Optional Kit/Diaph. Cover	K1675-03		10 1/2	1	23T	*	*	*	*
			69-68	11" Clutch	K1877-06		11	1	23T	*	*	*	*
				Optional Kit/HD Disc	K1877-06HD		11	1	23T	*	*	*	*
	400"	6.6	74-72		K1858-05	2	11	1	23T	*	*	*	*
	426"	7.0	66-63	10 1/2" Clutch	K1506L-02	2	10 1/2	1	23T	*	*	*	*
				Optional Kit/Diaph. Cover	K1675-03		10 1/2	1	23T	*	*	*	*
FURY I													
6	225"	3.7	73-68	10" Clutch	K1525-01	2	10	1	23T	*	*	*	*
8	318"	5.2	73-72	Lever Cover	K1506L-02	2	10 1/2	1	23T	*	*	*	*
			73-68	10 1/2" Clutch, Diaph. Cover	K1675-03		10 1/2	1	23T	*	*	*	*
			68	10" Clutch	K1525-01	2	10	1	23T	*	*	*	*

* Not Available
Ø Components Available
Š Kit Includes Concentric Slave Cylinder
ƒ Kit Includes Flywheel

© 2014 ZF North American Operations, Inc. All Rights Reserved. No portion of this work may be reproduced or copied by any means without the prior approval of ZF North American Operations, Inc.

CLUTCH KIT

Cyl.	CC Cubic Inch	Liter	Year	Application Information	Clutch Kit	Notes Pg.180	Disc Size O.D.	Disc Size I.D.	Disc Size Teeth	PreFilled Master Or System	Master Cylinder	Slave Cylinder	Flywheel
PLYMOUTH (Cont'd)													
FURY I (Cont'd)													
8	360"	5.9	74	11" Clutch	K1858-05	2	11	1	23T	*	*	*	*
			74-71	10 1/2" Clutch	K1675-03		10 1/2	1	23T	*	*	*	*
	383"	6.3	71-68	10 1/2" Clutch	K1506L-02	2	10 1/2	1	23T	*	*	*	*
				Optional Kit/Diaph. Cover	K1675-03		10 1/2	1	23T	*	*	*	*
			69-68	11" Clutch	K1877-06		11	1	23T	*	*	*	*
				Optional Kit/HD Disc	K1877-06HD		11	1	23T	*	*	*	*
	400"	6.6	74-72		K1858-05	2	11	1	23T	*	*	*	*
FURY II													
6	225"	3.7	71-65	10" Clutch	K1525-01	2	10	1	23T	*	*	*	*
8	273"	4.5	65		K1506L-02	2	10 1/2	1	23T	*	*	*	*
	318"	5.2	73-72	Lever Cover	K1506L-02	2	10 1/2	1	23T	*	*	*	*
			73-65	10 1/2" Clutch, Diaph. Cover	K1675-03		10 1/2	1	23T	*	*	*	*
			68	10" Clutch	K1525-01	2	10	1	23T	*	*	*	*
	360"	5.9	74	11" Clutch	K1858-05	2	11	1	23T	*	*	*	*
			74-71	10 1/2" Clutch	K1675-03		10 1/2	1	23T	*	*	*	*
	383"	6.3	71-68	10 1/2" Clutch	K1506L-02	2	10 1/2	1	23T	*	*	*	*
				Optional Kit/Diaph. Cover	K1675-03		10 1/2	1	23T	*	*	*	*
			69-68	11" Clutch	K1877-06		11	1	23T	*	*	*	*
				Optional Kit/HD Disc	K1877-06HD		11	1	23T	*	*	*	*
	400"	6.6	74-72		K1858-05	2	11	1	23T	*	*	*	*
	426"	7.0	65	10 1/2" Clutch	K1506L-02	2	10 1/2	1	23T	*	*	*	*
				Optional Kit/Diaph. Cover	K1675-03		10 1/2	1	23T	*	*	*	*
FURY III													
6	225"	3.7	71-65	10" Clutch	K1525-01	2	10	1	23T	*	*	*	*
8	273"	4.5	65		K1506L-02	2	10 1/2	1	23T	*	*	*	*
	318"	5.2	73-72	Lever Cover	K1506L-02	2	10 1/2	1	23T	*	*	*	*
			73-65	10 1/2" Clutch	K1675-03		10 1/2	1	23T	*	*	*	*
			68	10" Clutch	K1525-01	2	10	1	23T	*	*	*	*
	360"	5.9	74	11" Clutch	K1858-05	2	11	1	23T	*	*	*	*
			74-71	10 1/2" Clutch	K1675-03		10 1/2	1	23T	*	*	*	*
	383"	6.3	71-68	10 1/2" Clutch	K1506L-02	2	10 1/2	1	23T	*	*	*	*
				Optional Kit/Diaph. Cover	K1675-03		10 1/2	1	23T	*	*	*	*
			69-68	11" Clutch	K1877-06		11	1	23T	*	*	*	*
				Optional Kit/HD Disc	K1877-06HD		11	1	23T	*	*	*	*
	400"	6.6	74-72		K1858-05	2	11	1	23T	*	*	*	*
	426"	7.0	65	10 1/2" Clutch	K1506L-02	2	10 1/2	1	23T	*	*	*	*
				Optional Kit/Diaph. Cover	K1675-03		10 1/2	1	23T	*	*	*	*
GRAN FURY													
6	225"	3.7	80	10" Clutch	K1525-01	2	10	1	23T	*	*	*	*
GTX													
8	273"	4.5	67		K1675-03		10 1/2	1	23T	*	*	*	*
	383"	6.3	68	11" Clutch	K1877-06		11	1	23T	*	*	*	*
				Optional Kit/HD Disc	K1877-06HD		11	1	23T	*	*	*	*
			68-67	10 1/2" Clutch	K1506L-02	2	10 1/2	1	23T	*	*	*	*
				Optional Kit/Diaph. Cover	K1675-03		10 1/2	1	23T	*	*	*	*

* Not Available
Ø Components Available
Š Kit Includes Concentric Slave Cylinder
ƒ Kit Includes Flywheel

© 2014 ZF North American Operations, Inc. All Rights Reserved. No portion of this work may be reproduced or copied by any means without the prior approval of ZF North American Operations, Inc.

SACHS

CLUTCH KIT

Cyl.	CC Cubic Inch	Liter	Year	Application Information	Clutch Kit	Notes Pg.180	Disc Size O.D.	Disc Size I.D.	Disc Size Teeth	PreFilled Master Or System	Master Cylinder	Slave Cylinder	Flywheel
PLYMOUTH (Cont'd)													
GTX (Cont'd)													
8	426"	7.0	71-67	10 1/2" Clutch	K1506L-02	2	10 1/2	1	23T	*	*	*	*
				Optional Kit/Diaph. Cover	K1675-03		10 1/2	1	23T	*	*	*	*
HORIZON													
4	105"	1.7	82-78	A412 eng.	K1885-01 ◎		7 1/2	13/16	24T	*	*	*	*
	135"	2.2	90-81		K0050-03		8 1/2	13/16	18T	*	*	*	*
LASER													
4	107"	1.8	94-90		KF621-03		7 7/8	7/8	20T	*	SH5115	SH6048	*
	122"	2.0	94-93	2WD, Turbo	KF735-01		8 7/8	7/8	20T	*	SH5114	SH6339	*
			94-92	4WD, Turbo	KF735-01		8 7/8	7/8	20T	*	SH5114	SH6138	*
			94-90	Non-Turbo	K0107-01		8 1/2	7/8	20T	*	*	*	*
			92	(fr. 5/92 to 12/92) 4WD, Turbo, Federal Emissions	KF735-01		8 7/8	7/8	20T	*	SH5115	SH6138	*
				(fr. 1/92 to 4/92) 4WD, Turbo, California/Canada Emissions	KF735-01		8 7/8	7/8	20T	*	SH5114	SH6138	*
			92-90	2WD, Turbo w/ Speed Control	KF735-01		8 7/8	7/8	20T	*	SH5114	SH6339	*
				2WD, Turbo w/o Speed Control	KF735-01		8 7/8	7/8	20T	*	SH5115	SH6339	*
NEON													
4	122"	2.0	01	Mexico (11th Digit of VIN # T)	K70132-01		8 1/2	15/16	17T	*	SH5194	SH6180	*
				USA (11th Digit of VIN # D), Replaces O.E. 8 1/2" Modular Kit	K70131-01 ƒ◎	10	9	15/16	17T	*	SH5194	SH6180	*
				Optional Power Clutch Kit	PC70131-01 ƒ◎	10	9	15/16	17T	*	SH5194	SH6180	*
			00-96	USA (11th Digit of VIN # D), Replaces O.E. 8 1/2" Modular Kit	K70131-01 ƒ◎	10	9	15/16	17T	*	*	*	*
				Optional Power Clutch Kit	PC70131-01 ƒ◎	10	9	15/16	17T	*	*	*	*
				Mexico (11th Digit of VIN # T)	K70132-01		8 1/2	15/16	17T	*	*	*	*
			95		K70132-01		8 1/2	15/16	17T	*	*	*	*
RELIANT													
4	135"	2.2	89-81		K0050-03		8 1/2	13/16	18T	*	*	*	*
	153"	2.5	88-86		K0066-07		9	13/16	18T	*	*	*	*
ROADRUNNER													
8	273"	4.5	68		K1675-03		10 1/2	1	23T	*	*	*	*
	318"	5.2	75		K1675-03		10 1/2	1	23T	*	*	*	*
	340"	5.6	73-71		K1506L-02	2	10 1/2	1	23T	*	*	*	*
				Optional Kit/Diaph. Cover	K1675-03		10 1/2	1	23T	*	*	*	*
	360"	5.9	75-74	10 1/2" Clutch	K1675-03		10 1/2	1	23T	*	*	*	*
				11" Clutch	K1858-05	2	11	1	23T	*	*	*	*
	383"	6.3	71-68	10 1/2" Clutch	K1506L-02	2	10 1/2	1	23T	*	*	*	*
				Optional Kit/Diaph. Cover	K1675-03		10 1/2	1	23T	*	*	*	*
			69-68	11" Clutch	K1877-06		11	1	23T	*	*	*	*
				Optional Kit/HD Disc	K1877-06HD		11	1	23T	*	*	*	*
	400"	6.6	74-72		K1858-05	2	11	1	23T	*	*	*	*
	426"	7.0	71-68	10 1/2" Clutch	K1506L-02	2	10 1/2	1	23T	*	*	*	*
				Optional Kit/Diaph. Cover	K1675-03		10 1/2	1	23T	*	*	*	*

◎ Kit Only

* Not Available
Ø Components Available
Š Kit Includes Concentric Slave Cylinder
ƒ Kit Includes Flywheel

© 2014 ZF North American Operations, Inc. All Rights Reserved. No portion of this work may be reproduced or copied by any means without the prior approval of ZF North American Operations, Inc.

CLUTCH KIT

Cyl.	CC Cubic Inch	Liter	Year	Application Information	Clutch Kit	Notes Pg.180	Disc Size O.D.	Disc Size I.D.	Disc Size Teeth	PreFilled Master Or System	Master Cylinder	Slave Cylinder	Flywheel
PLYMOUTH (Cont'd)													
SAPPORO													
4	97"	1.6	79-78		KF621-05		7 7/8	7/8	20T	*	*	*	*
	156"	2.6	83-78		KF685-03		8 7/8	1	23T	*	*	*	NFW5102
SATELLITE													
6	225"	3.7	74-70	10" Clutch	K1525-01	2	10	1	23T	*	*	*	*
			67-66	10" Clutch	K1525-01	2	10	1	23T	*	*	*	*
8	273"	4.5	68-67		K1675-03		10 1/2	1	23T	*	*	*	*
			66-65		K1506L-02	2	10 1/2	1	23T	*	*	*	*
	360"	5.9	74	10 1/2" Clutch	K1675-03		10 1/2	1	23T	*	*	*	*
				11" Clutch	K1858-05	2	11	1	23T	*	*	*	*
	361"	5.9	66-65		K1506L-02	2	10 1/2	1	23T	*	*	*	*
				Optional Kit/Diaph. Cover	K1675-03		10 1/2	1	23T	*	*	*	*
	383"	6.3	71-65	10 1/2" Clutch	K1506L-02	2	10 1/2	1	23T	*	*	*	*
				Optional Kit/Diaph. Cover	K1675-03		10 1/2	1	23T	*	*	*	*
			69-68	11" Clutch	K1877-06		11	1	23T	*	*	*	*
				Optional Kit/HD Disc	K1877-06HD		11	1	23T	*	*	*	*
	400"	6.6	74-72		K1858-05	2	11	1	23T	*	*	*	*
	426"	7.0	67-65		K1506L-02	2	10 1/2	1	23T	*	*	*	*
				Optional Kit/Diaph. Cover	K1675-03		10 1/2	1	23T	*	*	*	*
SAVOY													
6	225"	3.7	64-60	10" Clutch	K1525-01	2	10	1	23T	*	*	*	*
8	361"	5.9	64-63		K1506L-02	2	10 1/2	1	23T	*	*	*	*
				Optional Kit/Diaph. Cover	K1675-03		10 1/2	1	23T	*	*	*	*
	383"	6.3	64-63		K1506L-02	2	10 1/2	1	23T	*	*	*	*
				Optional Kit/Diaph. Cover	K1675-03		10 1/2	1	23T	*	*	*	*
	426"	7.0	64-63		K1506L-02	2	10 1/2	1	23T	*	*	*	*
				Optional Kit/Diaph. Cover	K1675-03		10 1/2	1	23T	*	*	*	*
SCAMP													
4	135"	2.2	83		K0050-03		8 1/2	13/16	18T	*	*	*	*
6	198"	3.2	74-71	10" Clutch	K1525-01	2	10	1	23T	*	*	*	*
	225"	3.7	76-71	10" Clutch	K1525-01	2	10	1	23T	*	*	*	*
8	318"	5.2	76-71	10 1/2" Clutch	K1675-03		10 1/2	1	23T	*	*	*	*
			74-72	Lever Cover	K1506L-02	2	10 1/2	1	23T	*	*	*	*
SUNDANCE													
4	135"	2.2	94-91	Non-Turbo	K0050-02		8 1/2	15/16	17T	*	*	*	*
			90-87	Non-Turbo	K0050-03		8 1/2	13/16	18T	*	*	*	*
			88-87	Turbo	K0066-07		9	13/16	18T	*	*	*	*
	153"	2.5	94-91	incl. Turbo	K70067-01		9 1/8	15/16	17T	*	*	*	*
			90-88	incl. Turbo	K0066-07		9	13/16	18T	*	*	*	*
6	181"	3.0	94-93		K0066-03		9 1/8	15/16	17T	*	*	*	*
VALIANT													
6	170"	2.8	69-60	10" Clutch	K1525-01	2	10	1	23T	*	*	*	*
	198"	3.2	74-70	10" Clutch	K1525-01	2	10	1	23T	*	*	*	*
	225"	3.7	76-61	10" Clutch	K1525-01	2	10	1	23T	*	*	*	*
8	273"	4.5	69-67		K1675-03		10 1/2	1	23T	*	*	*	*
			66-65		K1506L-02	2	10 1/2	1	23T	*	*	*	*

* Not Available
Ø Components Available
Š Kit Includes Concentric Slave Cylinder
ƒ Kit Includes Flywheel

© 2014 ZF North American Operations, Inc. All Rights Reserved. No portion of this work may be reproduced or copied by any means without the prior approval of ZF North American Operations, Inc.

SACHS

CLUTCH KIT

Cyl.	CC Cubic Inch	Liter	Year	Application Information	Clutch Kit	Notes Pg.180	Disc Size O.D.	Disc Size I.D.	Disc Size Teeth	PreFilled Master Or System	Master Cylinder	Slave Cylinder	Flywheel
PLYMOUTH (Cont'd)													
VALIANT (Cont'd)													
8	318"	5.2	76-68	10 1/2" Clutch	K1675-03		10 1/2	1	23T	*	*	*	*
			74-72	Lever Cover	K1506L-02	2	10 1/2	1	23T	*	*	*	*
			68	10" Clutch	K1525-01	2	10	1	23T	*	*	*	*
	360"	5.9	76	10 1/2" Clutch	K1675-03		10 1/2	1	23T	*	*	*	*
VOLARÉ													
6	225"	3.7	80-76	10" Clutch	K1525-01	2	10	1	23T	*	*	*	*
8	318"	5.2	78-76		K1675-03		10 1/2	1	23T	*	*	*	*
	360"	5.9	78-76		K1675-03		10 1/2	1	23T	*	*	*	*
PLYMOUTH LIGHT TRUCK													
ARROW PICKUP													
4	122"	2.0	82-81		KF591-04		8 1/2	1	23T	*	*	*	NFW5105
			80-79		KF591-01		8 1/2	7/8	20T	*	*	*	NFW5105
	156"	2.6	82-79		KF685-03		8 7/8	1	23T	*	*	*	NFW5102
TRAILDUSTER													
6	225"	3.7	80-78		K1858-05	2	11	1	23T	*	*	*	*
				Optional Kit/Diaph. Cover	K1877-06		11	1	23T	*	*	*	*
				Optional Kit/Diaph. w/ HD Disc	K1877-06HD		11	1	23T	*	*	*	*
8	318"	5.2	81-74		K1877-06		11	1	23T	*	*	*	*
				Optional Kit/HD Disc	K1877-06HD		11	1	23T	*	*	*	*
	360"	5.9	81-74		K1877-06		11	1	23T	*	*	*	*
				Optional Kit/HD Disc	K1877-06HD		11	1	23T	*	*	*	*
VOYAGER													
4	135"	2.2	87-84		K0066-07		9	13/16	18T	*	*	*	*
	153"	2.5	92-91		K0066-03		9 1/8	15/16	17T	*	*	*	*
			90-87		K0066-07		9	13/16	18T	*	*	*	*
	156"	2.6	86-84		KF685-03		8 7/8	1	23T	*	*	*	*
6	181"	3.0	92-91		K0066-03		9 1/8	15/16	17T	*	*	*	*
			90		K0066-07		9	13/16	18T	*	*	*	*
PONTIAC													
ASTRE													
4	140"	2.3	77-75	3 & 4 Spd.	K1878-02	28	9 1/8	1 1/8	10T	*	*	*	*
	151"	2.5	77		K1878-02	28	9 1/8	1 1/8	10T	*	*	*	*
BONNEVILLE													
8	350"	5.7	70	3 Spd.	K1874-02	28	10 1/2	1 1/8	10T	*	*	*	*
	389"	6.4	66-62	10 1/2" Clutch, 2 bbl.	K1874-02	28	10 1/2	1 1/8	10T	*	*	*	*
			64	10 1/2" Clutch, 4 bbl.	K1675-10	28	10 1/2	1 1/8	10T	*	*	*	*
			60-59	11" Clutch	K1862-05	2,28	11	1 1/8	10T	*	*	*	*
				12" Clutch	K1862-01	2,28	12	1 1/8	10T	*	*	*	*
				Optional Kit/Diaph. Cover	K1909-02	28	12	1 1/8	10T	*	*	*	*
				Optional Kit/Diaph. w/ HD Disc	K1909-02HD	28	12	1 1/8	10T	*	*	*	*
				Optional Kit/Diaph. w/ CB Disc	K1909-02CB	28	12	1 1/8	10T	*	*	*	*
				Optional Kit/Diaph. w/ Kevlar® Disc	K1909-02KL	28	12	1 1/8	10T	*	*	*	*
	400"	6.6	72-71	4 Spd., 4 bbl.	K1675-21	28	10 1/2	1 1/8	26T	*	*	*	*
				Optional Power Clutch Kit	PC1675-21	28	10 1/2	1 1/8	26T	*	*	*	*
			72-70	3 Spd., 10 1/2" Clutch	K1675-10	28	10 1/2	1 1/8	10T	*	*	*	*

* Not Available
Ø Components Available
Š Kit Includes Concentric Slave Cylinder
ƒ Kit Includes Flywheel

© 2014 ZF North American Operations, Inc. All Rights Reserved. No portion of this work may be reproduced or copied by any means without the prior approval of ZF North American Operations, Inc.

CLUTCH KIT

Cyl.	CC Cubic Inch	Liter	Year	Application Information	Clutch Kit	Notes Pg.180	Disc Size O.D.	Disc Size I.D.	Disc Size Teeth	PreFilled Master Or System	Master Cylinder	Slave Cylinder	Flywheel
PONTIAC (Cont'd)													
CATALINA													
8	350"	5.7	73-70	3 Spd.	K1874-02	28	10 1/2	1 1/8	10T	*	*	*	*
			72-71	4 Spd.	K1874-01	28	10 3/8	1 1/8	26T	*	*	*	*
	389"	6.4	66-62	2 bbl.	K1874-02	28	10 1/2	1 1/8	10T	*	*	*	*
			64	4 bbl.	K1675-10	28	10 1/2	1 1/8	10T	*	*	*	*
			60-59	11" Clutch	K1862-05	2,28	11	1 1/8	10T	*	*	*	*
				12" Clutch	K1862-01	2,28	12	1 1/8	10T	*	*	*	*
				Optional Kit/Diaph. Cover	K1909-02	28	12	1 1/8	10T	*	*	*	*
				Optional Kit/Diaph. w/ HD Disc	K1909-02HD	28	12	1 1/8	10T	*	*	*	*
				Optional Kit/Diaph. w/ CB Disc	K1909-02CB	28	12	1 1/8	10T	*	*	*	*
				Optional Kit/Diaph. w/ Kevlar® Disc	K1909-02KL	28	12	1 1/8	10T	*	*	*	*
	400"	6.6	72-71	4 Spd., 4 bbl.	K1675-21	28	10 1/2	1 1/8	26T	*	*	*	*
				Optional Power Clutch Kit	PC1675-21	28	10 1/2	1 1/8	26T	*	*	*	*
			72-70	3 Spd., 10 1/2" Clutch	K1675-10	28	10 1/2	1 1/8	10T	*	*	*	*
EXECUTIVE													
8	350"	5.7	70	3 Spd.	K1874-02	28	10 1/2	1 1/8	10T	*	*	*	*
	400"	6.6	70	3 Spd., 10 1/2" Clutch	K1675-10	28	10 1/2	1 1/8	10T	*	*	*	*
FIERO													
4	151"	2.5	84	4 Spd.	K1914-01	30	9 1/8	1	14T	*	SH5094	SH6116	*
6	173"	2.8	88	5 Spd.	K0059-01	29,30	9 1/8	1	14T	*	*	*	NFW1006
			87-86	(fr. 5/86) 5 Spd.	K0059-01	29,30	9 1/8	1	14T	*	*	*	*
			86-85	(fr. 10/85 to 4/86) 5 Spd.	K0059-01	29,30	9 1/8	1	14T	*	SH5068	*	*
			85	4 Spd.	K1914-01	30	9 1/8	1	14T	*	SH5094	SH6015	*
				(to 9/85) 5 Spd.	K0059-01	29,30	9 1/8	1	14T	*	SH5094	*	*
FIREBIRD													
4	151"	2.5	86-84		K1902-03	9,28	9 1/8	1	14T	*	SH5045	SH6091	*
				Optional Kit/Non-Cam Hub Disc	K1902-01	28	9 1/8	1	14T	*	SH5045	SH6091	*
			83		K1902-03	9,28	9 1/8	1	14T	*	*	*	*
				Optional Kit/Non-Cam Hub Disc	K1902-01	28	9 1/8	1	14T	*	*	*	*
			82		K1902-02		9 1/8	1 1/8	10T	*	*	*	*
6	173"	2.8	89-85		K1902-03	9,28,36	9 1/8	1	14T	*	SH5045	SH6091	*
				Optional Kit/Non-Cam Hub Disc	K1902-01	28,36	9 1/8	1	14T	*	SH5045	SH6091	*
	189"	3.1	92-90		K1902-01	28,36	9 1/8	1	14T	SPH002	SH5045	SH6091	NFW7224
	207"	3.4	95	CMC Pushrod Stamped CV601A	K70084-01	28	9 11/16	1 1/8	26T	SPH002	SH5147	SH6132	NFW7224
				CMC Pushrod Stamped H603A	K70084-01	28	9 11/16	1 1/8	26T	SPH002	SH5148	SH6132	NFW7224
			94-93		K70084-01	28	9 11/16	1 1/8	26T	SPH002	SH5147	SH6132	NFW7224
	230"	3.8	67	1 bbl.	K1874-06	28	10	1 1/8	10T	*	*	*	NFW1017
				HD, 4 bbl.	K1675-10	28	10 1/2	1 1/8	10T	*	*	*	*
	231"	3.8	02-98		K70184-01 ⚑	54	9 11/16	1 1/8	26T	*	SH5182	SH6133WB	*
				Slave Cylinder w/o Bearing	K70184-01	54	9 11/16	1 1/8	26T	*	SH5182	SH6133	*
			97-96		K70184-01 ⚑	54	9 11/16	1 1/8	26T	*	SH5148	SH6133WB	*
				Slave Cylinder w/o Bearing	K70184-01	54	9 11/16	1 1/8	26T	*	SH5148	SH6133	*
			81-79		K1675-10	28	10 1/2	1 1/8	10T	*	*	*	NFW1017
			78		K1874-02	28	10 1/2	1 1/8	10T	*	*	*	*
			77	3 Spd.	K1874-06	28	10	1 1/8	10T	*	*	*	NFW1017
				4 Spd.	K1878-02	28	9 1/8	1 1/8	10T	*	*	*	*

⚑ Slave cylinder includes bearing (not Included in Clutch Kit)

* Not Available
Ø Components Available
Š Kit Includes Concentric Slave Cylinder
ƒ Kit Includes Flywheel

© 2014 ZF North American Operations, Inc. All Rights Reserved. No portion of this work may be reproduced or copied by any means without the prior approval of ZF North American Operations, Inc.

SACHS

CLUTCH KIT

Cyl.	CC Cubic Inch	Liter	Year	Application Information	Clutch Kit	Notes Pg.180	Disc Size O.D.	Disc Size I.D.	Disc Size Teeth	PreFilled Master Or System	Master Cylinder	Slave Cylinder	Flywheel
PONTIAC (Cont'd)													
FIREBIRD (Cont'd)													
6	250"	4.1	76-70	3 Spd., 1 bbl.	K1874-06	28	10	1 1/8	10T	*	*	*	NFW1017
			69-68	1 bbl.	K1874-06	28	10	1 1/8	10T	*	*	*	NFW1017
				4 bbl.	K1675-10	28	10 1/2	1 1/8	10T	*	*	*	*
8	301"	4.9	80		K1675-10	28	10 1/2	1 1/8	10T	*	*	*	*
			79		K1675-21	28	10 1/2	1 1/8	26T	*	*	*	*
				Optional Power Clutch Kit	PC1675-21	28	10 1/2	1 1/8	26T	*	*	*	*
			77		K1675-10		10 1/2	1 1/8	10T	*	*	*	*
	305"	5.0	92-86	8th Digit of VIN # E or F	K1675-21	28,36	10 1/2	1 1/8	26T	*	SH5045	SH6091	NFW1004
				Optional Power Clutch Kit	PC1675-21	28,36	10 1/2	1 1/8	26T	*	SH5045	SH6091	NFW1004
			85-83	Replaces O.E. 10" Clutch, Hydraulic Rel.	K1675-21	28	10 1/2	1 1/8	26T	*	SH5045	SH6091	NFW1017
				Optional Power Clutch Kit	PC1675-21	28	10 1/2	1 1/8	26T	*	SH5045	SH6091	NFW1017
			83-80	4 & 5 Spd., Mechanical Rel.	K1675-21	28	10 1/2	1 1/8	26T	*	*	*	NFW1017
				Optional Power Clutch Kit	PC1675-21	28	10 1/2	1 1/8	26T	*	*	*	NFW1017
			82-79	4 Spd.	K1675-10	28	10 1/2	1 1/8	10T	*	*	*	*
			81	California only	K1675-21	28	10 1/2	1 1/8	26T	*	*	*	NFW1017
				Optional Power Clutch Kit	PC1675-21	28	10 1/2	1 1/8	26T	*	*	*	NFW1017
				exc. California	K1877-04	28	11	1 1/8	26T	*	*	*	NFW1007
			78-77		K1874-02	28	10 1/2	1 1/8	10T	*	*	*	*
	326"	5.3	67		K1675-10	28	10 1/2	1 1/8	10T	*	*	*	*
	350"	5.7	02-98		K70185-01 ƒ ⅄ ◎	54,65	11 3/4	1 1/8	26T	*	SH5182	SH6133WB	*
				Slave Cylinder w/o Bearing	K70185-01 ƒ ◎	54,65	11 3/4	1 1/8	26T	*	SH5182	SH6133	*
			97-95	LT1 eng., CMC Pushrod Stamped H603A	K70043-01	28,54	11	1 1/8	26T	*	SH5148	SH6132	*
			95-93	LT1 eng., CMC Pushrod Stamped CV601A	K70043-01	28,54	11	1 1/8	26T	SPH002	SH5147	SH6132	*
			92-87	Replaces O.E. 10" Clutch, Hydraulic Rel.	K1675-21	28,36	10 1/2	1 1/8	26T	*	*	*	*
				Optional Power Clutch Kit	PC1675-21	28,36	10 1/2	1 1/8	26T	*	*	*	*
			78		K1675-10	28	10 1/2	1 1/8	10T	*	*	*	*
			77-75	4 Spd.	K1675-21	28	10 1/2	1 1/8	26T	*	*	*	*
				Optional Power Clutch Kit	PC1675-21	28	10 1/2	1 1/8	26T	*	*	*	*
			76-68	3 Spd., 2 bbl., exc. 350 HO	K1874-02	28	10 1/2	1 1/8	10T	*	*	*	*
			74-71	4 Spd., 2 bbl., exc. 350 HO	K1874-01	28	10 3/8	1 1/8	26T	*	*	*	*
			69	350 HO	K1675-10	28	10 1/2	1 1/8	10T	*	*	*	*
	400"	6.6	79-77		K1877-04	28	11	1 1/8	26T	*	*	*	NFW1007
			76-71	4 Spd., 4 bbl.	K1675-21	28	10 1/2	1 1/8	26T	*	*	*	*
				Optional Power Clutch Kit	PC1675-21	28	10 1/2	1 1/8	26T	*	*	*	*
			72-67	3 Spd.	K1675-10		10 1/2	1 1/8	10T	*	*	*	*
	403"	6.6	78-77		K1877-04		11	1 1/8	26T	*	*	*	*
FIREFLY (CANADA ONLY)													
3	61"	1.0	99-94	Non-Turbo	K0108-02		6 3/4	3/4	18T	*	*	*	NFW3302
			91-89	Non-Turbo	K0108-02		6 3/4	3/4	18T	*	*	*	NFW3302
			90-87	Turbo	K0077-01		7 1/2	3/4	18T	*	*	*	*

⅄ Slave cylinder includes bearing (not Included in Clutch Kit)
◎ Kit Only

* Not Available
Ø Components Available
Š Kit Includes Concentric Slave Cylinder
ƒ Kit Includes Flywheel

© 2014 ZF North American Operations, Inc. All Rights Reserved. No portion of this work may be reproduced or copied by any means without the prior approval of ZF North American Operations, Inc.

CLUTCH KIT

Cyl.	CC Cubic Inch	Liter	Year	Application Information	Clutch Kit	Notes Pg.180	Disc Size O.D.	Disc Size I.D.	Disc Size Teeth	PreFilled Master Or System	Master Cylinder	Slave Cylinder	Flywheel
PONTIAC (Cont'd)													
FIREFLY (CANADA ONLY) (Cont'd)													
3	61"	1.0	88-85	Non-Turbo	KF748-01		7 1/2	7/8	20T	*	*	*	*
4	79"	1.3	99-94		K0077-01		7 1/2	3/4	18T	*	*	*	*
GRAND AM													
4	134"	2.2	04-02		K70330-01 Š◎		8 13/16	1	14T	*	SH5099	SB60139	NFW9123
	138"	2.3	95		K70163-01 Š	52	8 7/8	1	14T	*	SH5042	SB60310	*
			94-92	DOHC, 8th Digit of VIN # A, Quad 4, exc. Ext. Slave Cyl.	K0059-03 Š	52	9 1/8	1	14T	*	SH5042	SB60082	*
				SOHC, 8th Digit of VIN # 3	K70083-01	27	9 1/8	1	14T	*	*	SH6040	*
			92-89	DOHC, 8th Digit of VIN # A, Quad 4, Ext. Slave Cyl.	K0059-01	29	9 1/8	1	14T	*	*	*	*
	146"	2.4	01-00		K70258-01 Š		8 7/8	1	14T	*	SH5099	SB60139	*
			98-96		K70163-01 Š	52	8 7/8	1	14T	*	SH5042	SB60310	*
6	231"	3.8	79		K1675-10	28	10 1/2	1 1/8	10T	*	*	*	*
8	305"	5.0	79		K1675-10	28	10 1/2	1 1/8	10T	*	*	*	*
			78	3 Spd.	K1874-02	28	10 1/2	1 1/8	10T	*	*	*	*
	350"	5.7	75	4 Spd., 2 bbl.	K1675-21	28	10 1/2	1 1/8	26T	*	*	*	*
				Optional Power Clutch Kit	PC1675-21	28	10 1/2	1 1/8	26T	*	*	*	*
			73	4 Spd., 2 bbl.	K1874-01	28	10 3/8	1 1/8	26T	*	*	*	*
	400"	6.6	75-73	4 Spd., 4 bbl.	K1675-21	28	10 1/2	1 1/8	26T	*	*	*	*
				Optional Power Clutch Kit	PC1675-21	28	10 1/2	1 1/8	26T	*	*	*	*
GRAND LeMANS													
6	231"	3.8	79		K1675-10	28	10 1/2	1 1/8	10T	*	*	*	*
			78-77	10 1/2" Clutch	K1874-02	28	10 1/2	1 1/8	10T	*	*	*	*
			77	10" Clutch	K1874-06	28	10	1 1/8	10T	*	*	*	*
	250"	4.1	76-75	3 Spd.	K1874-06	28	10	1 1/8	10T	*	*	*	*
8	260"	4.3	76	3 Spd.	K1874-06	28	10	1 1/8	10T	*	*	*	*
	301"	4.9	79		K1675-10	28	10 1/2	1 1/8	10T	*	*	*	*
	305"	5.0	79		K1675-10	28	10 1/2	1 1/8	10T	*	*	*	*
			78-77	3 Spd.	K1874-02	28	10 1/2	1 1/8	10T	*	*	*	*
	350"	5.7	76	4 Spd., 2 bbl.	K1675-21	28	10 1/2	1 1/8	26T	*	*	*	*
				Optional Power Clutch Kit	PC1675-21	28	10 1/2	1 1/8	26T	*	*	*	*
			76-75	3 Spd., 2 bbl.	K1874-02	28	10 1/2	1 1/8	10T	*	*	*	*
	400"	6.6	77-76	4 Spd., 4 bbl.	K1675-21	28	10 1/2	1 1/8	26T	*	*	*	*
				Optional Power Clutch Kit	PC1675-21	28	10 1/2	1 1/8	26T	*	*	*	*
GRAND PRIX													
6	173"	2.8	89-88		K0059-01	29	9 1/8	1	14T	*	SH5087	SH6040	NFW1006
	189"	3.1	92-89		K0059-01	29	9 1/8	1	14T	*	SH5087	SH6040	NFW1025
	207"	3.4	94-91	Pull Type	K70045-01 ◎		9 11/16	1	23T	*	*	SH6152	NFW1025
	231"	3.8	78		K1874-02	28	10 1/2	1 1/8	10T	*	*	*	*
8	389"	6.4	66-62	2 bbl.	K1874-02	28	10 1/2	1 1/8	10T	*	*	*	*
			64	4 bbl.	K1510-02	2,28	10 1/2	1 1/8	10T	*	*	*	*
				Optional Kit/Diaph. Cover	K1675-10	28	10 1/2	1 1/8	10T	*	*	*	*
	400"	6.6	72-71	4 Spd.	K1675-21	28	10 1/2	1 1/8	26T	*	*	*	*
				Optional Power Clutch Kit	PC1675-21	28	10 1/2	1 1/8	26T	*	*	*	*

◎ Kit Only

* Not Available
Ø Components Available
Š Kit Includes Concentric Slave Cylinder
ƒ Kit Includes Flywheel

© 2014 ZF North American Operations, Inc. All Rights Reserved. No portion of this work may be reproduced or copied by any means without the prior approval of ZF North American Operations, Inc.

SACHS

CLUTCH KIT

Cyl.	CC Cubic Inch	Liter	Year	Application Information	Clutch Kit	Notes Pg.180	Disc Size O.D.	Disc Size I.D.	Disc Size Teeth	PreFilled Master Or System	Master Cylinder	Slave Cylinder	Flywheel
PONTIAC (Cont'd)													
GRAND PRIX (Cont'd)													
8	400"	6.6	72-70	3 Spd.	K1675-10	28	10 1/2	1 1/8	10T	*	*	*	*
GTO													
8	350"	5.7	04	6 Spd.	K70185-01 ƒ◎	54,65	11 3/4	1 1/8	26T	*	*	SH6414	*
	364"	6.0	06-05		K70185-02 ƒ◎		11 3/4	1 1/8	26T	*	*	SH6414	*
	389"	6.4	66-64		K1675-10	28	10 1/2	1 1/8	10T	*	*	*	*
	400"	6.6	73-72	4 Spd., 4 bbl.	K1675-21	28	10 1/2	1 1/8	26T	*	*	*	*
				Optional Power Clutch Kit	PC1675-21	28	10 1/2	1 1/8	26T	*	*	*	*
			71-67	3 & 4 Spd.	K1675-10	28	10 1/2	1 1/8	10T	*	*	*	*
G3													
4	98"	1.6	10-09		K70265-01		8 1/2	13/16	24T	*	SH5348	*	NFW9150
G5													
4	134"	2.2	09-07		K70412-01 Š◎		8 7/8	1	14T	*	SH5303	SB60211	NFW9123
	145"	2.4	08-07		K70412-01 Š◎		8 7/8	1	14T	*	SH5303	SB60211	NFW9123
G6													
6	237"	3.9	07-06		SK70435-1 ◎☆		9 1/2	1	23T	*	SH5344	*	*
J2000													
4	112"	1.8	83	5 Spd., O-type, Replaces O.E. 8" Clutch	K0034-02	27	8 1/2	1	14T	*	SH5039	*	*
				4 Spd.	K0034-01		8 1/2	1	14T	*	*	*	*
			82	4 Spd.	K1914-01	1	9 1/8	1	14T	*	*	*	NFW1006
	122"	2.0	83	4 Spd.	K1914-01	1	9 1/8	1	14T	*	*	*	NFW1006
J2000 SUNBIRD													
4	112"	1.8	85-84	5 Spd., O-type, Replaces O.E. 8" Clutch	K0034-02	27	8 1/2	1	14T	*	SH5039	*	*
	122"	2.0	85	4 Spd.	K1914-01	1	9 1/8	1	14T	*	SH5040	*	NFW1006
			84	4 Spd.	K1914-01	1	9 1/8	1	14T	*	*	*	NFW1006
LeMANS													
4	98"	1.6	93-88	F16 Transaxle Type	K0111-01	18	7 7/8	3/4	24T	*	*	*	*
			88	F13 Transaxle Type	K0073-01	18	7 7/8	3/4	14T	*	*	*	*
	122"	2.0	90-89	5 Spd.	K0112-01		8 1/2	3/4	24T	*	*	*	*
6	215"	3.5	65-64	HD	K1874-06	28	10	1 1/8	10T	*	*	*	*
	230"	3.8	67-66	10 1/2" Clutch	K1675-10	28	10 1/2	1 1/8	10T	*	*	*	*
				10" Clutch	K1874-06	28	10	1 1/8	10T	*	*	*	*
	231"	3.8	79		K1675-10	28	10 1/2	1 1/8	10T	*	*	*	*
			78-77	10 1/2" Clutch	K1874-02	28	10 1/2	1 1/8	10T	*	*	*	*
			77	10" Clutch	K1874-06	28	10	1 1/8	10T	*	*	*	*
	250"	4.1	76-70	3 Spd., 1 bbl.	K1874-06	28	10	1 1/8	10T	*	*	*	*
			69-68	4 bbl.	K1675-10	28	10 1/2	1 1/8	10T	*	*	*	*
				1 bbl.	K1874-06	28	10	1 1/8	10T	*	*	*	*
8	260"	4.3	76	3 Spd.	K1874-06	28	10	1 1/8	10T	*	*	*	*
	301"	4.9	79		K1675-10	28	10 1/2	1 1/8	10T	*	*	*	*
	305"	5.0	79		K1675-10		10 1/2	1 1/8	10T	*	*	*	*
			78-77	3 Spd.	K1874-02	28	10 1/2	1 1/8	10T	*	*	*	*
	326"	5.3	67-63		K1874-02	28	10 1/2	1 1/8	10T	*	*	*	*

◎ Kit Only
☆ Clutch Releaser only available through dealer

* Not Available
Ø Components Available
Š Kit Includes Concentric Slave Cylinder
ƒ Kit Includes Flywheel

© 2014 ZF North American Operations, Inc. All Rights Reserved. No portion of this work may be reproduced or copied by any means without the prior approval of ZF North American Operations, Inc.

CLUTCH KIT

Cyl.	CC Cubic Inch	Liter	Year	Application Information	Clutch Kit	Notes Pg.180	Disc Size O.D.	Disc Size I.D.	Disc Size Teeth	PreFilled Master Or System	Master Cylinder	Slave Cylinder	Flywheel
PONTIAC (Cont'd)													
LeMANS (Cont'd)													
8	350"	5.7	76	4 Spd., 2 bbl.	K1675-21	28	10 1/2	1 1/8	26T	*	*	*	*
				Optional Power Clutch Kit	PC1675-21	28	10 1/2	1 1/8	26T	*	*	*	*
			76-68	3 Spd., 2 bbl.	K1874-02	28	10 1/2	1 1/8	10T	*	*	*	*
			74-71	4 Spd., 2 bbl.	K1874-01	28	10 3/8	1 1/8	26T	*	*	*	*
			69-68	HO, 4 bbl.	K1675-10	28	10 1/2	1 1/8	10T	*	*	*	*
	389"	6.4	65	2 bbl.	K1874-02	28	10 1/2	1 1/8	10T	*	*	*	*
			64	4 bbl.	K1675-10	28	10 1/2	1 1/8	10T	*	*	*	*
	400"	6.6	77-76	4 Spd., 4 bbl.	K1675-21		10 1/2	1 1/8	26T	*	*	*	*
				Optional Power Clutch Kit	PC1675-21		10 1/2	1 1/8	26T	*	*	*	*
			72-68	3 Spd.	K1675-10	28	10 1/2	1 1/8	10T	*	*	*	*
PHOENIX													
4	151"	2.5	84-80	Replaces O.E. 9 11/16" Clutch	K1914-01		9 1/8	1	14T	*	*	*	*
6	173"	2.8	84-80	Replaces O.E. 9 11/16" Clutch	K1914-01		9 1/8	1	14T	*	*	*	*
	231"	3.8	79		K1675-10		10 1/2	1 1/8	10T	*	*	*	*
			78		K1874-02		10 1/2	1 1/8	10T	*	*	*	*
8	305"	5.0	79		K1675-10		10 1/2	1 1/8	10T	*	*	*	*
			78-77		K1874-02		10 1/2	1 1/8	10T	*	*	*	*
	350"	5.7	77		K1675-10		10 1/2	1 1/8	10T	*	*	*	*
PURSUIT (CANADA ONLY)													
4	134"	2.2	06-05		K70412-01 Š◎		8 7/8	1	14T	*	SH5303	SB60211	*
SAFARI													
6	250"	4.1	70	3 Spd., 1 bbl.	K1874-06	28	10	1 1/8	10T	*	*	*	*
			69-68	4 bbl.	K1675-10	28	10 1/2	1 1/8	10T	*	*	*	*
8	350"	5.7	70-68		K1675-10	28	10 1/2	1 1/8	10T	*	*	*	*
	389"	6.4	65	2 bbl.	K1874-02	28	10 1/2	1 1/8	10T	*	*	*	*
			64	4 bbl.	K1675-10	28	10 1/2	1 1/8	10T	*	*	*	*
SOLSTICE													
4	1998cc	2.0	09-07		K70469-01 ◎♈		9 7/16	1 1/8	26T	*	*	*	*
	2384cc	2.4	09-06		K70511-01 Š		9	1 1/8	26T	*	*	SB60311	*
SUNBIRD													
4	112"	1.8	86	5 Spd., O-type, Replaces O.E. 8" Clutch	K0034-02	27	8 1/2	1	14T	*	SH5039	*	*
	121"	2.0	94-92		K0034-02	27	8 1/2	1	14T	SPH016	SH5040	*	*
			91-89	Non-Turbo	K0034-03	27	8	1	14T	*	SH5040	*	*
			88-87	Non-Turbo	K0034-03	27	8	1	14T	*	SH5040	*	NFW1006
			86		K1914-01	1	9 1/8	1	14T	*	SH5040	*	NFW1006
	140"	2.3	77-76	3 & 4 Spd.	K1878-02	28	9 1/8	1 1/8	10T	*	*	*	*
	151"	2.5	80-77		K1878-02	28	9 1/8	1 1/8	10T	*	*	*	*
6	191"	3.1	94-93		K0059-03 Š	52	9 1/8	1	14T	*	SH5042	SB60082	NFW1006
			92-91		K0059-01	29	9 1/8	1	14T	SPH020	SH5040	SH6040	NFW1006
	231"	3.8	80-79		K1675-10		10 1/2	1 1/8	10T	*	*	*	*
			78-76		K1878-02	28	9 1/8	1 1/8	10T	*	*	*	*
SUNFIRE													
4	134"	2.2	05-02	8th Digit of VIN # F	K70330-01 Š◎		8 13/16	1	14T	*	SH5422	SB60139	NFW9123

◎ Kit Only
♈ Kit does not include Concentric Slave Cylinder and/or Release Bearing (Sold Separately)

* Not Available
Ø Components Available
Š Kit Includes Concentric Slave Cylinder
ƒ Kit Includes Flywheel

© 2014 ZF North American Operations, Inc. All Rights Reserved. No portion of this work may be reproduced or copied by any means without the prior approval of ZF North American Operations, Inc.

SACHS

CLUTCH KIT

Cyl.	CC Cubic Inch	Liter	Year	Application Information	Clutch Kit	Notes Pg.180	Disc Size O.D.	Disc Size I.D.	Disc Size Teeth	PreFilled Master Or System	Master Cylinder	Slave Cylinder	Flywheel
PONTIAC (Cont'd)													
SUNFIRE (Cont'd)													
4	134"	2.2	02-00	8th Digit of VIN # 4	K70315-01 Š	52	8 1/2	1	14T	*	SH5422	SB60139	NFW1006
			99-95		K70156-01 Š	52	8 1/2	1	14T	*	SH5099	SB60310	NFW1006
	138"	2.3	95		K70163-01 Š	52	8 7/8	1	14T	*	SH5099	SB60310	*
	146"	2.4	02-00		K70258-01 Š		8 7/8	1	14T	*	SH5422	SB60139	*
			99-96	MJ1 eng.	K70163-01 Š	52	8 7/8	1	14T	*	SH5099	SB60310	*
SUNRUNNER (CANADA ONLY)													
4	97"	1.6	97-96		K0107-03		8 1/2	7/8	20T	*	*	*	NFW6801
			95-94		K0107-03		8 1/2	7/8	20T	*	*	*	*
T1000													
4	98"	1.6	87-86		K1912-20 ◎		8	1	14T	*	*	*	*
			81		K1880-01		7	1	14T	*	*	*	*
TEMPEST													
6	215"	3.5	65-64	HD	K1874-06	28	10	1 1/8	10T	*	*	*	*
	230"	3.8	67-66	10" Clutch	K1874-06	28	10	1 1/8	10T	*	*	*	*
				10 1/2" Clutch	K1675-10	28	10 1/2	1 1/8	10T	*	*	*	*
	250"	4.1	70	3 Spd., 1 bbl.	K1874-06	28	10	1 1/8	10T	*	*	*	*
			69-68	4 bbl.	K1675-10	28	10 1/2	1 1/8	10T	*	*	*	*
8	326"	5.3	67-63		K1874-02	28	10 1/2	1 1/8	10T	*	*	*	*
	350"	5.7	70	4 Spd., 2 bbl.	K1675-10		10 1/2	1 1/8	10T	*	*	*	*
			68	HO, 4 bbl.	K1675-10	28	10 1/2	1 1/8	10T	*	*	*	*
	389"	6.4	64	4 bbl.	K1675-10	28	10 1/2	1 1/8	10T	*	*	*	*
	400"	6.6	70-68	3 Spd.	K1675-10	28	10 1/2	1 1/8	10T	*	*	*	*
TEMPEST (CANADA ONLY)													
4	122"	2.0	89-87	Muncie 4 Spd.	K1914-01		9 1/8	1	14T	*	SH5040	*	NFW1006
6	173"	2.8	89	Getrag/Muncie 5 Spd.	K0059-01	29	9 1/8	1	14T	*	SH5040	SH6040	NFW1006
				Isuzu 5 Spd.	K70083-01	27	9 1/8	1	14T	*	SH5040	SH6040	NFW1006
			88-87	Isuzu 5 Spd.	K70083-01	27	9 1/8	1	14T	*	SH5040	*	NFW1006
				Getrag/Muncie 5 Spd.	K0059-01	29	9 1/8	1	14T	*	SH5040	*	NFW1006
	189"	3.1	91-90	Getrag/Muncie 5 Spd.	K0059-01	29	9 1/8	1	14T	*	SH5040	SH6040	NFW1006
VENTURA													
4	151"	2.5	77		K1878-02		9 1/8	1 1/8	10T	*	*	*	*
6	231"	3.8	77	10" Clutch	K1874-06	28	10	1 1/8	10T	*	*	*	*
				10 1/2" Clutch	K1874-02	28	10 1/2	1 1/8	10T	*	*	*	*
	250"	4.1	76-71	3 Spd.	K1874-06	28	10	1 1/8	10T	*	*	*	*
8	260"	4.3	76-75	3 Spd.	K1874-06	28	10	1 1/8	10T	*	*	*	*
	305"	5.0	77	3 Spd.	K1874-02	28	10 1/2	1 1/8	10T	*	*	*	*
	307"	5.0	72-71		K1874-01		10 3/8	1 1/8	26T	*	*	*	*
	350"	5.7	76-72	3 Spd., 2 bbl.	K1874-02	28	10 1/2	1 1/8	10T	*	*	*	*
			75-72	4 Spd., 2 bbl.	K1675-21	28	10 1/2	1 1/8	26T	*	*	*	*
				Optional Power Clutch Kit	PC1675-21	28	10 1/2	1 1/8	26T	*	*	*	*
VIBE													
4	109"	1.8	08-03	exc. GT	K70079-03		8 3/8	15/16	21T	*	SH5260	SH6216	*
	110"	1.8	06-03	GT	K70079-03		8 3/8	15/16	21T	*	SH5260	SH6216	*

◎ Kit Only

* Not Available
Ø Components Available
Š Kit Includes Concentric Slave Cylinder
ƒ Kit Includes Flywheel

© 2014 ZF North American Operations, Inc. All Rights Reserved. No portion of this work may be reproduced or copied by any means without the prior approval of ZF North American Operations, Inc.

CLUTCH KIT

Cyl.	CC Cubic Inch	Liter	Year	Application Information	Clutch Kit	Notes Pg.180	Disc Size O.D.	Disc Size I.D.	Disc Size Teeth	PreFilled Master Or System	Master Cylinder	Slave Cylinder	Flywheel
PONTIAC (Cont'd)													
6000													
4	151"	2.5	84		K1914-01		9 1/8	1	14T	*	*	*	*
6	173"	2.8	88-86	5 Spd.	K0059-01	29	9 1/8	1	14T	*	SH5419	*	NFW1006
PORSCHE													
BOXSTER													
6	2480cc	2.5	99-97		K70193-01 ◎	60	9 7/16	31/32	23T	*	SH5196	SH6142	DMF91121
	2687cc	2.7	08-07	6 Spd.	K70424-01 ◎	60	9 7/16	15/16	23T	*	SH5196	SH6140	DMF91141
			08-00	5 Spd.	K70193-01 ◎	60	9 7/16	31/32	23T	*	SH5196	SH6141	DMF91121
	2706cc	2.7	14-13		K70544-01 ◎		9 7/16	15/16	23T	*	*	SH6515	*
	2893cc	2.9	12-09		K70424-01 ◎		9 7/16	15/16	23T	*	*	SH6515	*
	3179cc	3.2	06-05		K70424-01 ◎	60	9 7/16	15/16	23T	*	SH5196	SH6140	DMF91141
			04-00		K70290-01 ◎	60	9 7/16	1 1/32	23T	*	SH5196	SH6140	DMF91141
	3387cc	3.4	10-09		K70544-01 ◎		9 7/16	15/16	23T	*	SH5196	SH6515	*
			08-07		K70451-01 ◎	60	9 7/16	15/16	23T	*	SH5196	SH6140	DMF91141
	3436cc	3.4	14-13		K70544-01 ◎		9 7/16	15/16	23T	*	*	SH6515	*
			12-11		K70544-01 ◎		9 7/16	15/16	23T	*	SH5196	SH6515	*
CAYMAN													
6	2687cc	2.7	08-07	5 Spd.	K70193-01 ◎	60	9 7/16	31/32	23T	*	SH5196	SH6141	DMF91121
				6 Spd.	K70424-01 ◎	60	9 7/16	15/16	23T	*	SH5196	SH6140	DMF91141
	2706cc	2.7	14		K70544-01 ◎		9 7/16	15/16	23T	*	*	SH6515	*
	2893cc	2.9	12-09		K70424-01 ◎		9 7/16	15/16	23T	*	*	SH6515	*
	3387cc	3.4	10-09		K70544-01 ◎		9 7/16	15/16	23T	*	SH5196	SH6515	*
			08-06		K70451-01 ◎	60	9 7/16	15/16	23T	*	SH5196	SH6140	DMF91141
	3436cc	3.4	14		K70544-01 ◎		9 7/16	15/16	23T	*	*	SH6515	*
			12-11		K70544-01 ◎		9 7/16	15/16	23T	*	SH5196	SH6515	*
356													
4	1086cc	1.1	54-52		KF182-01	14	7 1/8	13/16	24T	*	*	*	*
			50-48		KF182-01	14	7 1/8	13/16	24T	*	*	*	*
	1286cc	1.3	55-51		KF182-01	14	7 1/8	13/16	24T	*	*	*	*
	1488cc	1.5	55-50		KF182-01	14	7 1/8	13/16	24T	*	*	*	*
356A													
4	1582cc	1.6	58-56	Super	KF199-01	2,14	7 1/8	13/16	24T	*	*	*	*
356B													
4	1582cc	1.6	62-60	Super 90	Ø					*	*	*	*
356C													
4	1582cc	1.6	65-64		Ø					*	*	*	*
356SC													
4	1582cc	1.6	65-64		Ø					*	*	*	*
911													
6	1991cc	2.0	69-65	Base, E, S, T	KF191-03	1	8 1/2	13/16	24T	*	*	*	*
	2195cc	2.2	71-70		KF200-03		8 7/8	13/16	24T	*	*	*	*
	2341cc	2.4	73-72		KF200-01 ◎		8 7/8	7/8	20T	*	*	*	*
				Optional Power Clutch Kit	PC200-01 ◎		8 7/8	7/8	20T	*	*	*	*
	2688cc	2.7	76-74	Carrera, S	KF200-01 ◎		8 7/8	7/8	20T	*	*	*	*
				Optional Power Clutch Kit	PC200-01 ◎		8 7/8	7/8	20T	*	*	*	*

◎ Kit Only

* Not Available
Ø Components Available
Š Kit Includes Concentric Slave Cylinder
ƒ Kit Includes Flywheel

© 2014 ZF North American Operations, Inc. All Rights Reserved. No portion of this work may be reproduced or copied by any means without the prior approval of ZF North American Operations, Inc.

SACHS

CLUTCH KIT

Cyl.	CC Cubic Inch	Liter	Year	Application Information	Clutch Kit	Notes Pg.180	Disc Size O.D.	Disc Size I.D.	Disc Size Teeth	PreFilled Master Or System	Master Cylinder	Slave Cylinder	Flywheel
PORSCHE (Cont'd)													
911 (Cont'd)													
6	2688cc	2.7	74	T Sportomatic	Ø		11 3/4	1 3/8	10T	*	*	*	*
	2999cc	3.0	83-78		KF200-01 ◎		8 7/8	7/8	20T	*	*	*	*
				Optional Power Clutch Kit	PC200-01 ◎		8 7/8	7/8	20T	*	*	*	*
			77-76		KF255-01		9 7/16	1	23T	*	*	*	*
	3163cc	3.2	89-87		K70021-01 ◎	33	9 7/16	1 1/32	23T	*	*	*	*
			86-84		KF200-01 ◎		8 7/8	7/8	20T	*	*	*	*
				Optional Power Clutch Kit	PC200-01 ◎		8 7/8	7/8	20T	*	*	*	*
	3294cc	3.3	92-91		KF793-01 ◎		9 7/16	1 1/32	23T	*	*	*	*
			88-87		KF252-01 ◎		9 7/16	1 1/32	23T	*	*	*	*
	3400cc	3.4	01-99		K70246-01 ◎	60	9 7/16	1 1/32	23T	*	SH5196	SH6196	DMF91120
	3436cc	3.4	14-12	Carrera, Carrera 4, Targa 4	K70530-01 ◎		9 1/2	15/16	23T	*	*	SH6472	*
	3596cc	3.6	09-08	GT2 (Turbo)	K70284-02 ◎		9 7/16	1 1/8	23T	*	*	SH6507	*
			09-07	Turbo	K70284-04		9 1/2	1 1/32	23T	*	*	*	*
			08	Non-Turbo	K70499-01 ◎	60	9 7/16	1 1/16	23T	*	SH5196	SH6196	DMF91120
			07-05	Non-Turbo, Body Code 997	K70499-01 ◎	60	9 7/16	1 1/16	23T	*	SH5196	SH6196	DMF91120
			05-02	Non-Turbo, Body Code 996	K70290-02	60	9 7/16	1 1/32	23T	*	SH5196	SH6196	DMF91120
	3598cc	3.6	08-07	GT3 (Non-Turbo)	K70284-02 ◎	60	9 7/16	1 1/8	23T	*	SH5196	SH6507	DMF91112
				GT3 RS (Non-Turbo)	K70284-03		9 7/16	1 1/32	23T	*	SH5196	SH6507	*
	3600cc	3.6	11	GT2 RS	K70284-05		9 7/16	1 1/32	23T	*	SH5196	SH6507	*
	3606cc	3.6	05	GT3 w/ clubsport Pkg. (Non-Turbo)	K70284-03	60	9 7/16	1 1/32	23T	*	SH5196	SH6196	DMF91112
			05-04	GT3 (Non-Turbo)	K70284-02 ◎	60	9 7/16	1 1/8	23T	*	SH5196	SH6196	DMF91112
			05-02	GT2 (Turbo)	K70284-02 ◎	60	9 7/16	1 1/8	23T	*	SH5196	SH6507	DMF91112
			05-01	Turbo exc. GT2	K70284-01	60	9 7/16	1	23T	*	*	*	DMF91112
			98-95	exc. Turbo	KF793-01 ◎	60	9 7/16	1 1/32	23T	*	*	*	DMF91106
			97-96	Turbo	K70555-01	60	9 7/16	1 1/32	23T	*	*	*	DMF91112
			94-90	Carrera 2, 4, RS America, Targa	KF793-01 ◎	60	9 7/16	1 1/32	23T	*	*	*	DMF91106
			89		K70021-02	33	9 7/16	1 1/32	23T	*	*	*	*
	3614cc	3.6	12	Carrera	K70530-01 ◎		9 1/2	15/16	23T	*	*	SH6472	*
				Carrera 4, Targa 4	K70530-01 ◎		9 1/2	15/16	23T	*	SH5196	SH6472	*
			11-09	Carrera, Carrera 4, Targa 4	K70530-01 ◎		9 1/2	15/16	23T	*	SH5196	SH6472	*
	3800cc	3.8	14	Carrera S, Carrera 4S, Targa 4S	K70530-01 ◎		9 1/2	15/16	23T	*	*	SH6472	*
			13-12	Carrera S, Carrera 4S, Carrera GTS, Carrera 4 GTS, 50th Aniversary Edition, Targa 4S	K70530-01 ◎		9 1/2	15/16	23T	*	*	SH6472	*
			11	GT3 RS	K70560-01		9 7/16	1 1/32	23T	*	SH5196	SH6507	*
			11-10	GT3	K70284-02 ◎		9 7/16	1 1/8	23T	*	SH5196	SH6507	*
			11-09	Non-Turbo (exc. GT3)	K70530-01 ◎		9 1/2	15/16	23T	*	SH5196	SH6472	*
	3824cc	3.8	13	Turbo	K70555-02		9 7/16	1 1/32	23T	*	*	SH6507	*
			12-10	Turbo	K70555-02		9 7/16	1 1/32	23T	*	*	*	*
			08-05		K70419-01 ◎	60	9 7/16	1	23T	*	SH5196	SH6196	DMF91120
	3996cc	4.0	11	GT3 RS 4.0	K70560-01		9 7/16	1 1/32	23T	*	SH5196	SH6507	*
912													
4	1582cc	1.6	69-65		KF192-01		7 7/8	13/16	24T	*	*	*	*
	1967cc	2.0	76		KF191-02		8 1/2	13/16	24T	*	*	*	*

◎ Kit Only

* Not Available
Ø Components Available
Š Kit Includes Concentric Slave Cylinder
ƒ Kit Includes Flywheel

© 2014 ZF North American Operations, Inc. All Rights Reserved. No portion of this work may be reproduced or copied by any means without the prior approval of ZF North American Operations, Inc.

CLUTCH KIT

Cyl.	CC Cubic Inch	Liter	Year	Application Information	Clutch Kit	Notes Pg.180	Disc Size O.D.	Disc Size I.D.	Disc Size Teeth	PreFilled Master Or System	Master Cylinder	Slave Cylinder	Flywheel
PORSCHE (Cont'd)													
914													
4	1679cc	1.7	73-70		KF198-01		8 1/2	13/16	24T	*	*	*	*
	1795cc	1.8	75-74		KF198-01		8 1/2	13/16	24T	*	*	*	*
	1967cc	2.0	76-74		KF191-01 ◎		8 1/2	13/16	24T	*	*	*	*
6	1991cc	2.0	71-70		KF191-01 ◎		8 1/2	13/16	24T	*	SH5413	*	*
924													
4	1983cc	2.0	82-81	Carrera GT, 31.50 eng.	KF200-02		8 7/8	1 1/32	23T	*	*	*	*
				Turbo, 31.03 eng.	KF298-02 ◎		8 7/8	1 1/32	23T	*	*	*	*
			82-80	31.01, 31.02, 31.04 Engines, Turbo	KF200-02		8 7/8	1 1/32	23T	*	SH5413	SH6425	*
			82-77		KF117-01 ◎		8 1/2	13/16	24T	*	*	*	*
	2475cc	2.5	88-87		KF298-02 ◎		8 7/8	1 1/32	23T	*	SH5413	SH6425	*
930													
6	3294cc	3.3	79-78		KF252-01 ◎		9 7/16	1 1/32	23T	*	*	*	*
944													
4	2475cc	2.5	89-86	Turbo	KF248-01 ◎		9 7/16	1 1/32	23T	*	SH5413	SH6425	*
			88-83	Non-Turbo	KF298-02 ◎		8 7/8	1 1/32	23T	*	SH5413	SH6425	*
	2688cc	2.7	89		KF298-02 ◎		8 7/8	1 1/32	23T	*	SH5413	SH6425	*
	2983cc	3.0	91-89		KF298-02 ◎		8 7/8	1 1/32	23T	*	SH5413	SH6425	*
968													
4	2983cc	3.0	95-92		KF793-02 ◎	60	9 7/16	1 1/32	23T	*	*	*	DMF91109
RAM LIGHT TRUCK													
2500													
6	408"	6.7	14		K70283-01	60	12 1/2	1 3/8	10T	SPH031	*	*	DMF91156
			13-11		K70283-01	60	12 1/2	1 3/8	10T	SPH031	SH5431	*	DMF91156
3500													
6	408"	6.7	14-12		K70283-01	60	12 1/2	1 3/8	10T	SPH031	*	*	DMF91156
			11		K70283-01	60	12 1/2	1 3/8	10T	SPH031	SH5431	*	DMF91156
4500													
6	408"	6.7	12-11		K70283-01	60	12 1/2	1 3/8	10T	*	*	*	DMF91156
5500													
6	408"	6.7	12-11		K70283-01	60	12 1/2	1 3/8	10T	*	*	*	DMF91156
RENAULT													
ALLIANCE													
4	1397cc	1.4	87-83		K0038-01 ◎		7 1/8	13/16	26T	*	*	*	*
ENCORE													
4	1397cc	1.4	86-84		K0038-01 ◎		7 1/8	13/16	26T	*	*	*	*
LeCAR													
4	1289cc	1.3	79-77		K0038-02 ◎		7 1/8	11/16	20T	*	*	*	*
	1397cc	1.4	83-80		K0038-02 ◎		7 1/8	11/16	20T	*	*	*	*
R5													
4	1289cc	1.3	76		K0038-02 ◎		7 1/8	11/16	20T	*	*	*	*
SAAB													
9-2X													
4	1994cc	2.0	05		K70362-01 ◎		9	1	24T	*	*	*	*
	2458cc	2.5	06	Turbo	K70461-01 ◎		9	1	24T	*	*	*	*
			06-05	Non-Turbo	K70443-01 ◎		8 7/8	1	24T	*	*	*	*

◎ Kit Only

* Not Available
Ø Components Available
Š Kit Includes Concentric Slave Cylinder
ƒ Kit Includes Flywheel

© 2014 ZF North American Operations, Inc. All Rights Reserved. No portion of this work may be reproduced or copied by any means without the prior approval of ZF North American Operations, Inc.

SACHS

CLUTCH KIT

Cyl.	CC Cubic Inch	Liter	Year	Application Information	Clutch Kit	Notes Pg.180	Disc Size O.D.	Disc Size I.D.	Disc Size Teeth	PreFilled Master Or System	Master Cylinder	Slave Cylinder	Flywheel
SAAB (Cont'd)													
9-3													
4	1985cc	2.0	11-10	FWD	K70444-02 Š◎		9 7/16	1	23T	*	SH5255	SB60245	*
				AWD	K70531-03 ◎♈	60	9 13/16	7/8	23T	*	SH5255	SB60245	DMF91179
			09-07	6 Spd., B207R eng.	K70444-02 Š◎		9 7/16	1	23T	*	SH5255	SB60245	*
			06-04	5 Spd., B207R eng.	K70444-01 Š◎		9 7/16	1	14T	*	SH5255	SB60244	*
			05	5 Spd., B207L eng.	K70475-01 Š◎		9 7/16	1	14T	*	SH5255	SB60244	*
			04-03	5 Spd., B207L eng.	K70444-01 Š◎		9 7/16	1	14T	*	SH5255	SB60244	*
				6 Spd., B207R eng.	K70444-02 Š◎		9 7/16	1	23T	*	SH5255	SB60245	*
			03-99	5 Spd., B204R & B205R eng.	K70142-02 Š◎		9	1	14T	*	SH5255	SB60118	*
			01-99	5 Spd., B204L & B205L eng.	K70235-01 Š◎		8 1/2	1	14T	*	SH5255	SB60118	*
	2290cc	2.3	02-99		K70377-01 Š◎		9	1	14T	*	SH5255	SB60118	*
6	2792cc	2.8	09-08	AWD	K70531-03 ◎♈	60	9 13/16	7/8	23T	*	SH5255	SB60245	DMF91161
			09-06	FWD	K70470-01 Š◎		9 7/16	1	20T	*	SH5255	SB60245	*
9-3X													
4	1985cc	2.0	11-10		K70531-03 ◎♈		9 13/16	7/8	23T	*	SH5255	SB60245	*
9-5													
4	1998cc	2.0	11	Turbo4	K70531-03 Š◎	60	9 13/16	7/8	23T	*	SH5538	SB60255	DMF91179
	2290cc	2.3	09-04	(fr. trans. C03504) exc. B235E eng.	K70538-01 Š◎		9	1	14T	*	SH5471	SB60244	*
			05-04	(fr. trans. C03504) B235E eng.	K70539-01 Š◎		9 1/2	1	14T	*	SH5255	SB60244	*
			04-00	(to trans. C03504) exc. B235E eng.	K70421-01 Š◎		9	1	14T	*	SH5471	SB60118	*
			04-99	(to trans. C03504) B235E eng.	K70254-01 Š◎		9	1	14T	*	SH5471	SB60118	*
95													
4	1498cc	1.5	70-68		KF194-01 ◎	2	7 1/2	7/8	10T	*	*	*	*
	1698cc	1.7	73-71		KF194-01 ◎	2	7 1/2	7/8	10T	*	*	*	*
96													
4	1498cc	1.5	70-68		KF194-01 ◎	2	7 1/2	7/8	10T	*	*	*	*
	1698cc	1.7	73-71		KF194-01 ◎	2	7 1/2	7/8	10T	*	*	*	*
99													
4	1985cc	2.0	80-76	Replaces O.E. 8" Clutch	KF436-01	23	8 1/2	3/4	17T	*	SH5024	*	*
900													
4	1985cc	2.0	98		K70142-02 Š◎		9	1	14T	*	SH5470	SB60118	*
			97-94		K70142-01 ◎		9	1	14T	*	SH5470	*	*
			93-90	Turbo	KF437-02		8 5/8	3/4	17T	*	SH5024	*	*
			89-85	(fr. 11/85) Turbo	KF436-02		8 1/2	3/4	17T	*	SH5024	*	*
			85-79	(to 10/85) incl. Turbo	KF436-01	23	8 1/2	3/4	17T	*	SH5024	*	*
	2119cc	2.1	93-91	S Convertible, Replaces O.E. 8" Clutch	KF436-02		8 1/2	3/4	17T	*	SH5024	*	*
	2290cc	2.3	98		K70235-01 Š◎		8 1/2	1	14T	*	*	SB60118	*
			97-94	(fr. eng. #R129243)	K70162-02 ◎		8 1/2	1	14T	*	*	*	*
			94	(to eng. #R129242)	K70142-01 ◎		9	1	14T	*	*	*	*
6	2498cc	2.5	95-94		K70143-01 ◎		9	1	14T	*	*	*	*
9000													
4	1985cc	2.0	90-87	Non-Turbo	KF436-03 ◎		8 1/2	3/4	17T	*	*	SH6395	*
			90-86	Turbo	KF437-01 ◎		8 7/8	3/4	17T	*	*	SH6395	*
	2290cc	2.3	98-94	exc. B234E eng.	K70127-03 ◎		9 7/16	1	14T	*	*	*	*

◎ Kit Only
♈ Kit does not include Concentric Slave Cylinder and/or Release Bearing (Sold Separately)

* Not Available
Ø Components Available
Š Kit Includes Concentric Slave Cylinder
ƒ Kit Includes Flywheel

© 2014 ZF North American Operations, Inc. All Rights Reserved. No portion of this work may be reproduced or copied by any means without the prior approval of ZF North American Operations, Inc.

CLUTCH KIT

Cyl.	CC Cubic Inch	Liter	Year	Application Information	Clutch Kit	Notes Pg.180	Disc Size O.D.	Disc Size I.D.	Disc Size Teeth	PreFilled Master Or System	Master Cylinder	Slave Cylinder	Flywheel
SAAB (Cont'd)													
9000 (Cont'd)													
4	2290cc	2.3	97-95	B234E eng.	K70127-01 ◎		9 7/16	1	14T	*	*	*	*
			94	Non-Turbo	K70547-01 ◎		8 1/2	1	14T	*	*	*	*
			93-91	Turbo	K70069-01 ◎		9 1/2	3/4	17T	*	*	SH6395	*
			93-90	Non-Turbo	KF436-03 ◎		8 1/2	3/4	17T	*	*	SH6395	*
6	2961cc	3.0	97-95		K70127-01 ◎		9 7/16	1	14T	*	*	*	*
SATURN													
ASTRA													
4	110"	1.8	09-08		K70629-01 Š◎		8 5/64	5/8	14T	*	SH5523	SB60254	*
ION													
4	122"	2.0	07-04	Red Line	K70403-01 Š		9 7/16	1	14T	*	*	SB60203	*
	134"	2.2	04-03		K70356-01 Š		9	1	14T	*	*	SB60140	*
ION-1													
4	134"	2.2	05		K70356-01 Š		9	1	14T	*	*	SB60140	*
ION-2													
4	134"	2.2	07-05		K70356-01 Š		9	1	14T	*	*	SB60140	*
ION-3													
4	134"	2.2	07-05		K70356-01 Š		9	1	14T	*	*	SB60140	*
	145"	2.4	07-06		K70356-01 Š		9	1	14T	*	*	SB60140	*
L100													
4	134"	2.2	02-01		K70305-01 Š		9	1	14T	*	SH5257	SB60118	NFW9123
L200													
4	134"	2.2	03-01		K70305-01 Š		9	1	14T	*	SH5257	SB60118	NFW9123
LS													
4	134"	2.2	00		K70305-01 Š		9	1	14T	*	SH5257	SB60118	NFW9123
LS1													
4	134"	2.2	00		K70305-01 Š		9	1	14T	*	SH5257	SB60118	NFW9123
LW200													
4	134"	2.2	03-01		K70305-01 Š		9	1	14T	*	SH5257	SB60118	NFW9123
SKY													
4	122"	2.0	10-07		K70469-01 ◎♈		9 7/16	1 1/8	26T	*	*	*	*
	145"	2.4	10-07		K70511-01 Š		9	1 1/8	26T	*	*	SB60311	*
SC SERIES													
4	116"	1.9	02-00		K70306-01		8 3/8	15/16	22T	SPH023	SH5190	SH6080	NFW1900
			99-91		K0115-01		8 1/2	15/16	22T	SPH022	SH5088	SH6080	NFW1900
SL SERIES													
4	116"	1.9	02-00		K70306-01		8 3/8	15/16	22T	SPH023	SH5190	SH6080	NFW1900
			99-91		K0115-01		8 1/2	15/16	22T	SPH022	SH5088	SH6080	NFW1900
SW SERIES													
4	116"	1.9	01-00		K70306-01		8 3/8	15/16	22T	SPH023	SH5190	SH6080	NFW1900
			99-93		K0115-01		8 1/2	15/16	22T	SPH022	SH5088	SH6080	NFW1900
SATURN LIGHT TRUCK													
VUE													
4	134"	2.2	07-02		K70305-02 Š		9	1	14T	*	*	SB60139	NFW9123

◎ Kit Only
♈ Kit does not include Concentric Slave Cylinder and/or Release Bearing (Sold Separately)

* Not Available
Ø Components Available
Š Kit Includes Concentric Slave Cylinder
ƒ Kit Includes Flywheel

© 2014 ZF North American Operations, Inc. All Rights Reserved. No portion of this work may be reproduced or copied by any means without the prior approval of ZF North American Operations, Inc.

SACHS

CLUTCH KIT

Cyl.	CC Cubic Inch	Liter	Year	Application Information	Clutch Kit	Notes Pg.180	Disc Size O.D.	Disc Size I.D.	Disc Size Teeth	PreFilled Master Or System	Master Cylinder	Slave Cylinder	Flywheel
SCION													
TC													
4	2362cc	2.4	10		KF718-03 ◎		9 5/16	1 1/8	21T	*	SH5260	SH6081	NFW9133
	2398cc	2.4	09-07		KF718-03 ◎		9 5/16	1 1/8	21T	*	SH5260	SH6081	NFW9133
			06-05		KF718-02		9 1/4	1 1/8	21T	*	SH5260	SH6081	NFW9133
	2494cc	2.5	14-11		*					*	SH5497	*	NFW9133
XA													
4	1497cc	1.5	06-04		K70079-03		8 3/8	15/16	21T	*	SH5261	SH6222	*
SCION LIGHT TRUCK													
XB													
4	1497cc	1.5	06-04		K70079-03		8 3/8	15/16	21T	*	SH5261	SH6222	*
	2362cc	2.4	14-08		KF718-03 ◎		9 5/16	1 1/8	21T	*	SH5497	SH6474	NFW9133
XD													
4	1798cc	1.8	14-08		K70611-01		8 3/8	31/32	21T	*	SH5498	*	NFW9132
SMART													
FORTWO													
3	1000cc	1.0	14-08		K70532-01 ◎☼		7 7/8	1/2	17T	*	*	SH6471	*
FORTWO (CANADA ONLY)													
3	799cc	0.8	07-05		K70532-01 ◎☼		7 7/8	1/2	17T	*	*	SH6471	*
	1000cc	1.0	14-08		K70532-01 ◎☼		7 7/8	1/2	17T	*	*	SH6471	*
STERLING													
825													
6	2494cc	2.5	88-87		KF641-01		8 7/8	31/32	24T	*	*	*	*
827													
6	2675cc	2.7	91-89		KF641-01		8 7/8	31/32	24T	*	*	*	*
SUBARU													
BRAT													
4	1595cc	1.6	80-78		KF599-02		7 7/8	3/4	23T	*	*	*	*
	1781cc	1.8	85-81		KF599-01		7 7/8	7/8	21T	*	*	*	*
DL													
4	1595cc	1.6	84-82		KF599-01		7 7/8	7/8	21T	*	*	*	*
			81-76		KF599-02		7 7/8	3/4	23T	*	*	*	*
	1781cc	1.8	89-80	FWD Sedan & FWD Wagon	KF599-01		7 7/8	7/8	21T	*	*	*	*
			84-82	FWD Hatchback	KF599-01		7 7/8	7/8	21T	*	*	*	*
			84-80	4WD Hatchback	KF599-01		7 7/8	7/8	21T	*	*	*	*
			82-80	4WD Sedan & 4WD Wagon	KF599-01		7 7/8	7/8	21T	*	*	*	*
FE													
4	1595cc	1.6	79		KF599-02		7 7/8	3/4	23T	*	*	*	*
FORESTER													
4	2458cc	2.5	10-09	Non-Turbo	KF738-02 ⅄	71	8 7/8	1	24T	*	SH5532	SH6218	NFW6605
				Optional Kit w/ Oversized Bearing & Sleeve	KF738-04	71	8 7/8	1	24T	*	SH5532	SH6218	NFW6605
			08-07	Turbo	K70461-01 ◎		9	1	24T	*	SH5517	SH6313	*
			08-99	Non-Turbo	KF738-02 ⅄	71	8 7/8	1	24T	*	SH5258	SH6218	NFW6605
				Optional Kit w/ Oversized Bearing & Sleeve	KF738-04	71	8 7/8	1	24T	*	SH5258	SH6218	NFW6605

⅄ If the bearing retainer is worn, replace entire clutch kit with KF738-04 which includes an oversize release bearing and repair sleeve that fits over the worn aluminum retainer.
◎ Kit Only
☼ Kit includes Clutch Fork

* Not Available
Ø Components Available
Š Kit Includes Concentric Slave Cylinder
ƒ Kit Includes Flywheel

© 2014 ZF North American Operations, Inc. All Rights Reserved. No portion of this work may be reproduced or copied by any means without the prior approval of ZF North American Operations, Inc.

CLUTCH KIT

Cyl.	CC Cubic Inch	Liter	Year	Application Information	Clutch Kit	Notes Pg.180	Disc Size O.D.	Disc Size I.D.	Disc Size Teeth	PreFilled Master Or System	Master Cylinder	Slave Cylinder	Flywheel
SUBARU (Cont'd)													
FORESTER (Cont'd)													
4	2458cc	2.5	06	Turbo	K70461-01 ◎		9	1	24T	*	SH5280	SH6313	*
			05-04	Turbo	K70362-01 ◎		9	1	24T	*	SH5280	SH6219	*
			98	Non-Turbo	KF738-02 ⅄	71	8 7/8	1	24T	*	SH5280	SH6218	NFW6605
				Optional Kit w/ Oversized Bearing & Sleeve	KF738-04	71	8 7/8	1	24T	*	SH5280	SH6218	NFW6605
	2498cc	2.5	12-11	Non-Turbo (to 3/02/12)	KF738-02 ⅄	71	8 7/8	1	24T	*	SH5532	SH6218	*
				Optional Kit w/ Oversized Bearing & Sleeve	KF738-04 ⅄	71	8 7/8	1	24T	*	SH5532	SH6218	*
GF													
4	1595cc	1.6	79-76		KF599-02		7 7/8	3/4	23T	*	*	*	*
GL													
4	1595cc	1.6	87-86		KF599-01		7 7/8	7/8	21T	*	*	*	*
			80-79		KF599-02		7 7/8	3/4	23T	*	*	*	*
	1781cc	1.8	89-82	FWD Hatchback	KF599-01		7 7/8	7/8	21T	*	*	*	*
			89-80	FWD Sedan & FWD Wagon	KF599-01		7 7/8	7/8	21T	*	*	*	*
			85-81	4WD Hatchback	KF599-01		7 7/8	7/8	21T	*	*	*	*
			82-80	4WD Sedan & 4WD Wagon	KF599-01		7 7/8	7/8	21T	*	*	*	*
GL-10													
4	1781cc	1.8	89-85	FWD Sedan & FWD Wagon	KF599-01		7 7/8	7/8	21T	*	*	*	*
GLF													
4	1595cc	1.6	80		KF599-02		7 7/8	3/4	23T	*	*	*	*
IMPREZA													
4	1781cc	1.8	97-96		KF738-01 ⌦		8 7/8	1	24T	*	*	*	NFW6605
				Optional Kit w/ Oversized Bearing & Sleeve	KF738-03		8 7/8	1	24T	*	*	*	NFW6605
			95	FWD	KF583-05		7 7/8	7/8	21T	*	*	*	NFW6605
			95-94	AWD	KF738-01 ⌦		8 7/8	1	24T	*	*	*	NFW6605
				Optional Kit w/ Oversized Bearing & Sleeve	KF738-03		8 7/8	1	24T	*	*	*	NFW6605
			94-93	FWD	KF583-04		7 7/8	7/8	21T	*	*	*	*
			93	AWD	K70096-01		8 1/2	1	24T	*	*	*	NFW6605
	1994cc	2.0	05-02	WRX	K70362-01 ◎		9	1	24T	*	SH5280	SH6219	*
	2212cc	2.2	01-95	AWD	KF738-01 ⌦		8 7/8	1	24T	*	*	*	NFW6605
				Optional Kit w/ Oversized Bearing & Sleeve	KF738-03		8 7/8	1	24T	*	*	*	NFW6605
	2458cc	2.5	13-12	Turbo w/ EJ257 eng.	K70388-01 ◎		9 1/2	1	24T	*	*	SH6219	*
			13-08	Turbo w/ EJ255 eng.	K70461-01 ◎		9	1	24T	*	SH5531	*	*
			11-09	Non-Turbo	KF738-02 ⅄	71	8 7/8	1	24T	*	SH5530	SH6218	NFW6605
				Optional Kit w/ Oversized Bearing & Sleeve	KF738-04	71	8 7/8	1	24T	*	SH5530	SH6218	NFW6605
			11-07	Turbo w/ EJ257 eng.	K70388-01 ◎		9 1/2	1	24T	*	SH5531	SH6219	*
			08	Non-Turbo	KF738-02 ⅄	71	8 7/8	1	24T	*	SH5529	SH6218	NFW6605
				Optional Kit w/ Oversized Bearing & Sleeve	KF738-04	71	8 7/8	1	24T	*	SH5529	SH6218	NFW6605

⌦ If the bearing retainer is worn, replace entire clutch kit with KF738-03 which includes an oversize release bearing and repair sleeve that fits over the worn aluminum retainer.
⅄ If the bearing retainer is worn, replace entire clutch kit with KF738-04 which includes an oversize release bearing and repair sleeve that fits over the worn aluminum retainer.
◎ Kit Only

* Not Available
Ø Components Available
Š Kit Includes Concentric Slave Cylinder
ƒ Kit Includes Flywheel

© 2014 ZF North American Operations, Inc. All Rights Reserved. No portion of this work may be reproduced or copied by any means without the prior approval of ZF North American Operations, Inc.

SACHS

CLUTCH KIT

Cyl.	CC Cubic Inch	Liter	Year	Application Information	Clutch Kit	Notes Pg.180	Disc Size O.D.	Disc Size I.D.	Disc Size Teeth	PreFilled Master Or System	Master Cylinder	Slave Cylinder	Flywheel
SUBARU (Cont'd)													
IMPREZA (Cont'd)													
4	2458cc	2.5	07-06	(fr. 5/20/06) Turbo w/ EJ255 eng.	K70461-01 ◎		9	1	24T	*	SH5517	*	*
			07-99	Non-Turbo	KF738-02 ⅄	71	8 7/8	1	24T	*	SH5258	SH6218	NFW6605
				Optional Kit w/ Oversized Bearing & Sleeve	KF738-04	71	8 7/8	1	24T	*	SH5258	SH6218	NFW6605
			06	(to 5/20/06) Turbo w/ EJ255 eng.	K70461-01 ◎		9	1	24T	*	SH5280	*	*
			06-04	Turbo w/ EJ257 eng.	K70388-01 ◎		9 1/2	1	24T	*	SH5280	SH6219	*
			98	Non-Turbo	KF738-02 ⅄	71	8 7/8	1	24T	*	SH5280	SH6218	NFW6605
				Optional Kit w/ Oversized Bearing & Sleeve	KF738-04	71	8 7/8	1	24T	*	SH5280	SH6218	NFW6605
JUSTY													
3	1189cc	1.2	94-91	(fr. 12/90)	KF690-02		7 1/8	3/4	23T	*	*	*	*
			91-87	(to 11/90)	KF690-01		7 1/8	3/4	23T	*	*	*	*
LEGACY													
4	2212cc	2.2	99-90	Non-Turbo	KF738-01 ⌦		8 7/8	1	24T	*	*	*	NFW6605
				Optional Kit w/ Oversized Bearing & Sleeve	KF738-03		8 7/8	1	24T	*	*	*	NFW6605
			94-91	Turbo	K70362-01 ◎		9	1	24T	*	SH5457	SH6426	*
	2458cc	2.5	12-10	2.5GT - Turbo	K70461-01 ◎		9	1	24T	*	*	*	*
				Non-Turbo	*					*	*	SH6313	*
			09-08	(fr. 6/19/07) GT Spec. B	*					*	SH5280	*	*
			09-07	GT Limited	K70461-01 ◎		9	1	24T	*	SH5280	*	*
				(to 6/19/07) GT Spec. B	K70500-01 ◎		9 1/2	15/16	24T	*	SH5280	*	*
			09-05	Non-Turbo	KF738-02 ⅄	71	8 7/8	1	24T	*	SH5331	SH6218	*
				Optional Kit w/ Oversized Bearing & Sleeve	KF738-04	71	8 7/8	1	24T	*	SH5331	SH6218	*
			06-05	Turbo	K70406-01	60	9 1/2	1	24T	*	SH5280	SH6313	DMF91151
			04-00	(fr. 4/00) Non-Turbo	KF738-02 ⅄	71	8 7/8	1	24T	*	SH5258	SH6218	*
				Optional Kit w/ Oversized Bearing & Sleeve	KF738-04	71	8 7/8	1	24T	*	SH5258	SH6218	*
			00	(to 3/00) Non-Turbo	KF738-02 ⅄	71	8 7/8	1	24T	*	SH5258	SH6218	NFW6605
				Optional Kit w/ Oversized Bearing & Sleeve	KF738-04	71	8 7/8	1	24T	*	SH5258	SH6218	NFW6605
			99-98	Non-Turbo	KF738-02 ⅄	71	8 7/8	1	24T	*	SH5280	SH6218	NFW6605
				Optional Kit w/ Oversized Bearing & Sleeve	KF738-04	71	8 7/8	1	24T	*	SH5280	SH6218	NFW6605
			97-96	Non-Turbo	KF738-02 ⅄	71	8 7/8	1	24T	*	SH5457	SH6218	NFW6605
				Optional Kit w/ Oversized Bearing & Sleeve	KF738-04	71	8 7/8	1	24T	*	SH5457	SH6218	NFW6605
LOYALE													
4	1781cc	1.8	93-90	2WD	KF599-01		7 7/8	7/8	21T	*	*	*	*
OUTBACK													
4	2458cc	2.5	13-10	Non-Turbo	*					*	*	SH6313	*

⌦ If the bearing retainer is worn, replace entire clutch kit with KF738-03 which includes an oversize release bearing and repair sleeve that fits over the worn aluminum retainer.
⅄ If the bearing retainer is worn, replace entire clutch kit with KF738-04 which includes an oversize release bearing and repair sleeve that fits over the worn aluminum retainer.
◎ Kit Only

* Not Available
Ø Components Available
Š Kit Includes Concentric Slave Cylinder
ƒ Kit Includes Flywheel

© 2014 ZF North American Operations, Inc. All Rights Reserved. No portion of this work may be reproduced or copied by any means without the prior approval of ZF North American Operations, Inc.

CLUTCH KIT

Cyl.	CC Cubic Inch	Liter	Year	Application Information	Clutch Kit	Notes Pg.180	Disc Size O.D.	Disc Size I.D.	Disc Size Teeth	PreFilled Master Or System	Master Cylinder	Slave Cylinder	Flywheel
SUBARU (Cont'd)													
OUTBACK (Cont'd)													
4	2458cc	2.5	09-07	Turbo	K70461-01 ◎		9	1	24T	*	SH5280	*	*
			09-05	Non-Turbo	KF738-02 ⅄		8 7/8	1	24T	*	SH5331	SH6218	*
				Optional Kit w/ Oversized Bearing & Sleeve	KF738-04		8 7/8	1	24T	*	SH5331	SH6218	*
			06-05	Turbo	K70406-01	60	9 1/2	1	24T	*	SH5280	SH6313	DMF91151
			04-00	(fr. 4/00) Non-Turbo	KF738-02 ⅄		8 7/8	1	24T	*	SH5258	SH6218	*
				Optional Kit w/ Oversized Bearing & Sleeve	KF738-04		8 7/8	1	24T	*	SH5258	SH6218	*
			00	(to 3/00) Non-Turbo	KF738-02 ⅄		8 7/8	1	24T	*	SH5258	SH6218	NFW6605
				Optional Kit w/ Oversized Bearing & Sleeve	KF738-04		8 7/8	1	24T	*	SH5258	SH6218	NFW6605
STANDARD													
4	1595cc	1.6	87-82		KF599-01		7 7/8	7/8	21T	*	*	*	*
			81-77		KF599-02		7 7/8	3/4	23T	*	*	*	*
	1781cc	1.8	87	FWD Hatchback	KF599-01		7 7/8	7/8	21T	*	*	*	*
			82	FWD Hatchback	KF599-01		7 7/8	7/8	21T	*	*	*	*
			82-81	4WD Hatchback	KF599-01		7 7/8	7/8	21T	*	*	*	*
XT													
4	1781cc	1.8	91-85	2WD	KF599-01		7 7/8	7/8	21T	*	*	*	*
SUBARU LIGHT TRUCK													
BAJA													
4	2458cc	2.5	06	Turbo	K70461-01 ◎		9	1	24T	*	SH5280	SH6219	*
			06-03	Non-Turbo	KF738-02 ⅄	71	8 7/8	1	24T	*	SH5258	SH6218	*
				Optional Kit w/ Oversized Bearing & Sleeve	KF738-04		8 7/8	1	24T	*	SH5258	SH6218	*
			05-04	Turbo	K70362-01 ◎		9	1	24T	*	SH5280	SH6219	*
SUZUKI													
AERIO													
4	2000cc	2.0	03-02		K70307-01		7 7/8	7/8	20T	*	SH5206	SH6319	*
	2290cc	2.3	07-04		K70273-01		8 1/2	7/8	20T	*	SH5332	SH6319	*
ESTEEM													
4	1590cc	1.6	00-95		K70196-01		7 1/2	3/4	18T	*	*	*	*
	1790cc	1.8	02-99		K70307-01		7 7/8	7/8	20T	*	SH5206	SH6319	*
FORENZA													
4	2000cc	2.0	08-04		K70267-02 Š◎		8 7/8	3/4	24T	*	SH5333	SB60313	*
FORSA (CANADA ONLY)													
3	1000cc	1.0	88-87	Turbo	K0077-02		7 1/2	3/4	18T	*	*	*	*
			88-85	Non-Turbo	K0043-01		6 1/4	3/4	18T	*	*	*	*
KIZASHI													
4	2388cc	2.4	13-10		*					*	*	SB60307	*
RENO													
4	1998cc	2.0	08-05		K70267-02 Š◎		8 7/8	3/4	24T	*	SH5333	SB60313	*

⅄ If the bearing retainer is worn, replace entire clutch kit with KF738-04 which includes an oversize release bearing and repair sleeve that fits over the worn aluminum retainer.
◎ Kit Only

* Not Available
Ø Components Available
Š Kit Includes Concentric Slave Cylinder
ƒ Kit Includes Flywheel

© 2014 ZF North American Operations, Inc. All Rights Reserved. No portion of this work may be reproduced or copied by any means without the prior approval of ZF North American Operations, Inc.

SACHS

CLUTCH KIT

Cyl.	CC Cubic Inch	Liter	Year	Application Information	Clutch Kit	Notes Pg.180	Disc Size O.D.	Disc Size I.D.	Disc Size Teeth	PreFilled Master Or System	Master Cylinder	Slave Cylinder	Flywheel
SUZUKI (Cont'd)													
SJ410													
4	970cc	1.0	85		K70061-01		7 1/8	3/4	18T	*	*	*	*
SWIFT													
4	1298cc	1.3	01-89		K0077-01		7 1/2	3/4	18T	*	*	*	*
SWIFT+ (CANADA ONLY)													
4	1598cc	1.6	09-04		K70265-01		8 1/2	13/16	24T	*	*	*	*
SX4													
4	1995cc	2.0	13-07		K70518-01 Š◎		8 1/2	7/8	20T	*	*	SB60307	*
X-90													
4	1590cc	1.6	98-96		K0107-03		8 1/2	7/8	20T	*	*	*	NFW6801
SUZUKI LIGHT TRUCK													
EQUATOR													
4	2500cc	2.5	12-09		K70426-01 ◎		9 1/2	1	24T	*	*	*	*
GRAND VITARA													
4	2393cc	2.4	13-09		*					*	SH5526	SB60312	*
6	2500cc	2.5	05-99		KF628-08		8 7/8	1 1/8	21T	*	SH5256	SH6220	*
	2737cc	2.7	08-06		K70609-01 Š		9 15/16	1 11/64	21T	*	SH5526	SB60312	*
			01		K70338-01		9 1/4	1 1/8	21T	*	SH5256	SH6220	*
SAMURAI													
4	1298cc	1.3	95-90		KF748-01		7 1/2	7/8	20T	*	*	*	NFW6800
	1325cc	1.3	89-85		KF748-01		7 1/2	7/8	20T	*	*	*	NFW6800
SAMURAI (CANADA ONLY)													
4	1298cc	1.3	85	SJ413	K70061-02		7 1/8	3/4	18T	*	*	*	*
SIDEKICK													
4	1325cc	1.3	89		KF748-01		7 1/2	7/8	20T	*	*	*	NFW6800
	1590cc	1.6	98-91	4 Door	K0107-03		8 1/2	7/8	20T	*	*	*	NFW6801
			91-90	2 Door	K1117-01		7 7/8	7/8	20T	*	*	*	NFW6801
	1840cc	1.8	98-96		K0107-03		8 1/2	7/8	20T	*	SH5206	SH6088	*
VITARA													
4	1590cc	1.6	01-99		K70273-01		8 1/2	7/8	20T	*	SH5256	SH6220	NFW6801
	2000cc	2.0	03-99		K70240-01		8 7/8	7/8	20T	*	SH5256	SH6220	*
6	2500cc	2.5	04		KF628-08		8 7/8	1 1/8	21T	*	SH5256	SH6220	*
XL-7													
6	2700cc	2.7	04-02		K70338-01		9 1/4	1 1/8	21T	*	SH5256	SH6220	*
	2737cc	2.7	05		K70338-01		9 1/4	1 1/8	21T	*	SH5256	SH6220	*
TOYOTA													
CAMRY													
4	1839cc	1.8	86-84		KF614-02 ◎		8 7/8	1	20T	*	SH5037	SH6014	*
	1974cc	2.0	86	Turbo Diesel	KF614-02 ◎		8 7/8	1	20T	*	SH5028	SH6014	*
	1995cc	2.0	86-83	2WD	KF614-01		8 7/8	1	20T	*	SH5028	SH6014	NFW6906
	1998cc	2.0	91-90	(fr. 5/90) 2WD	K70064-02		8 7/8	1	20T	*	SH5071	SH6081	NFW6911
			91-88	4WD	KF709-01		9 1/4	1 1/8	21T	*	SH5037	SH6036	NFW6911
			90-87	(to 4/90) 2WD	KF614-04		8 7/8	1	20T	*	SH5037	SH6036	NFW6911
	2164cc	2.2	01-92		K70064-02		8 7/8	1	20T	*	SH5071	SH6081	NFW6911
	2362cc	2.4	08-07	(to 3/08)	KF718-03 ◎		9 5/16	1 1/8	21T	*	*	SH6081	NFW9133
			06-02		KF718-02		9 1/4	1 1/8	21T	*	SH5260	SH6081	NFW9133

◎ Kit Only

* Not Available
Ø Components Available
Š Kit Includes Concentric Slave Cylinder
ƒ Kit Includes Flywheel

© 2014 ZF North American Operations, Inc. All Rights Reserved. No portion of this work may be reproduced or copied by any means without the prior approval of ZF North American Operations, Inc.

CLUTCH KIT

Cyl.	CC Cubic Inch	Liter	Year	Application Information	Clutch Kit	Notes Pg.180	Disc Size O.D.	Disc Size I.D.	Disc Size Teeth	PreFilled Master Or System	Master Cylinder	Slave Cylinder	Flywheel
TOYOTA (Cont'd)													
CAMRY (Cont'd)													
4	2494cc	2.5	11-10		*					*	*	*	NFW9133
6	2508cc	2.5	91-89		KF709-01		9 1/4	1 1/8	21T	*	SH5037	SH6036	*
	2959cc	3.0	93-92		KF718-02		9 1/4	1 1/8	21T	*	SH5071	SH6081	*
	2995cc	3.0	01-97		KF718-02		9 1/4	1 1/8	21T	*	SH5403	SH6114	*
CARINA													
4	1600cc	1.6	73-72		KF566-02		7 1/2	15/16	21T	*	SH5089	SH6082	*
CELICA													
4	1587cc	1.6	93-91	(fr. 8/91)	K70079-03		8 3/8	15/16	21T	*	SH5119	SH6037	*
			91-90	(to 7/91)	K70079-02		8 3/8	15/16	21T	*	SH5119	SH6037	*
	1762cc	1.8	97-94		K70079-03		8 3/8	15/16	21T	*	SH5158	SH6037	NFW6931
	1794cc	1.8	05-00	GT	K70079-03		8 3/8	15/16	21T	*	SH5260	SH6221	NFW9122
	1795cc	1.8	05-00	GTS	K70079-03		8 3/8	15/16	21T	*	SH5260	SH6221	*
	1898cc	1.9	71		K0076-08		7 7/8	15/16	21T	*	SH5089	*	*
	1968cc	2.0	74-72		KF542-01		8 7/8	1 1/8	21T	*	SH5089	*	*
	1995cc	2.0	86		KF614-01		8 7/8	1	20T	*	SH5008	SH6014	*
	1998cc	2.0	93-90		KF720-03		9 1/8	1 1/8	21T	*	SH5119	SH6114	NFW6911
			89-88	ST, GT	KF614-01		8 7/8	1	20T	*	SH5008	SH6036	*
				GTS	KF614-01		8 7/8	1	20T	*	SH5008	SH6014	*
				All Trac - Turbo	KF709-01		9 1/4	1 1/8	21T	*	SH5008	SH6036	*
			87-86		KF614-01		8 7/8	1	20T	*	SH5008	SH6014	*
	2164cc	2.2	99-96		K70064-02		8 7/8	1	20T	*	SH5158	SH6036	NFW6911
			95-90	(fr. 5/90)	K70064-02		8 7/8	1	20T	*	SH5119	SH6036	NFW6911
			90	(to 4/90)	K70064-01		8 7/8	1	20T	*	SH5119	SH6036	NFW6911
	2189cc	2.2	80-77	(fr. 8/77)	KF628-01		8 7/8	1 1/8	21T	*	SH5120	SH6006	*
			77-75	(fr. 10/75 to 7/77)	KF628-01		8 7/8	1 1/8	21T	*	SH5089	SH6115	*
	2366cc	2.4	85-81		KF628-01		8 7/8	1 1/8	21T	*	SH5008	SH6006	NFW6907
6	2754cc	2.8	86		KF628-01		8 7/8	1 1/8	21T	*	*	*	*
COROLLA													
4	1077cc	1.1	69-68		KF561-02		7 1/8	23/32	16T	*	*	*	*
	1166cc	1.2	79-74	(fr. 5/74)	KF596-01		7 1/8	13/16	19T	*	*	*	*
			74-70	(fr. 6/70 to 4/74)	KF561-01		7 1/8	13/16	19T	*	*	*	*
			70-69	(to 5/70)	KF561-02		7 1/8	23/32	16T	*	*	*	*
	1587cc	1.6	97-93		K70079-03		8 3/8	15/16	21T	*	SH5204	SH6037	NFW6931
			92-89	(fr. 5/91) FWD, exc. GTS	K0076-05		7 7/8	15/16	21T	*	SH5204	SH6037	NFW6926
			91-89	GTS	K70079-02		8 3/8	15/16	21T	*	SH5204	SH6037	NFW6926
			89	(fr. 5/89 to 8/89) FWD, exc. GTS	K0076-01		7 7/8	15/16	21T	*	SH5204	SH6037	NFW6926
			89-87	(fr. 8/87 to 4/89) FWD, exc. GTS & FX Series	K0076-01		7 7/8	15/16	21T	*	SH5156	SH6037	NFW6926
			88-87	FX Series	K0076-01		7 7/8	15/16	21T	*	SH5008	SH6039	NFW6926
			87-84	RWD (Exc. FX Series)	K0076-06		7 7/8	15/16	21T	*	SH5008	SH6039	NFW6926
				(to 7/87) FWD, exc. GTS & FX Series	K0076-01		7 7/8	15/16	21T	*	SH5008	SH6039	NFW6926
			83		K70079-04		8 3/8	15/16	21T	*	SH5008	SH6039	*
	1588cc	1.6	79-78		KF566-03		7 1/2	15/16	21T	*	SH5089	SH6006	*
			77-71		KF566-02		7 1/2	15/16	21T	*	SH5089	SH6006	*

* Not Available
Ø Components Available
Š Kit Includes Concentric Slave Cylinder
ƒ Kit Includes Flywheel

© 2014 ZF North American Operations, Inc. All Rights Reserved. No portion of this work may be reproduced or copied by any means without the prior approval of ZF North American Operations, Inc.

SACHS

CLUTCH KIT

Cyl.	CC Cubic Inch	Liter	Year	Application Information	Clutch Kit	Notes Pg.180	Disc Size O.D.	Disc Size I.D.	Disc Size Teeth	PreFilled Master Or System	Master Cylinder	Slave Cylinder	Flywheel
TOYOTA (Cont'd)													
COROLLA (Cont'd)													
4	1762cc	1.8	97-93		K70079-03		8 3/8	15/16	21T	*	SH5204	SH6037	NFW6931
	1770cc	1.8	82-80	4 & 5 Spd., 4 Door	K0076-06		7 7/8	15/16	21T	*	SH5126	SH6006	*
				4 Spd., 2 Door	KF628-06		8 3/8	15/16	21T	*	SH5126	SH6006	*
	1794cc	1.8	08-04		K70079-03		8 3/8	15/16	21T	*	SH5260	SH6216	NFW9122
			03-98		K70079-03		8 3/8	15/16	21T	*	SH5204	SH6037	NFW9122
	1795cc	1.8	06-05	XRS	K70079-03		8 3/8	15/16	21T	*	SH5260	SH6216	*
	1798cc	1.8	13-09		K70601-01 ◎		8 3/8	1	21T	*	SH5497	SH6516	NFW9132
	1839cc	1.8	85-84	Diesel	KF684-01		8 3/8	1	20T	*	SH5125	SH6014	*
	2362cc	2.4	10-09	XRS	KF718-03 ◎		9 5/16	1 1/8	21T	*	SH5497	SH6474	NFW9133
CORONA													
4	1898cc	1.9	70	8RC eng.	K0076-08		7 7/8	15/16	21T	*	*	*	*
			70-67	3RC eng.	KF530-01		7 7/8	15/16	21T	*	*	*	*
	2189cc	2.2	80-78	(fr. 9/78)	KF542-02		8 7/8	1 1/8	21T	*	SH5120	SH6006	NFW6909
			78-77	(fr. 9/77 to 8/78)	KF628-01		8 7/8	1 1/8	21T	*	SH5120	SH6003	*
	2366cc	2.4	82-81		KF628-01		8 7/8	1 1/8	21T	*	SH5120	SH6006	NFW6909
CRESSIDA													
6	2754cc	2.8	87-83		K70062-02		9 1/4	1 1/8	21T	*	SH5001	SH6038	*
CROWN													
6	2253cc	2.3	70		KF542-01		8 7/8	1 1/8	21T	*	*	SH6083	*
	2563cc	2.6	72-71		KF542-01		8 7/8	1 1/8	21T	*	*	SH6083	*
ECHO													
4	1497cc	1.5	05-00		K70495-01		8 3/8	15/16	21T	*	SH5261	SH6222	*
MARK II													
6	2253cc	2.3	72		KF542-01		8 7/8	1 1/8	21T	*	SH5001	SH6083	*
	2563cc	2.6	76-75		KF542-01		8 7/8	1 1/8	21T	*	*	SH6083	*
			74-73		KF542-01		8 7/8	1 1/8	21T	*	SH5001	SH6083	*
MATRIX													
4	1794cc	1.8	08-03		K70079-03		8 3/8	15/16	21T	*	SH5260	SH6216	NFW9122
	1795cc	1.8	06-03	XRS	K70079-03		8 3/8	15/16	21T	*	SH5260	SH6216	*
	1798cc	1.8	13-09		K70601-01 ◎		8 3/8	1	21T	*	SH5497	SH6516	NFW9132
	2362cc	2.4	13-09		KF718-03 ◎		9 5/16	1 1/8	21T	*	SH5497	SH6474	NFW9133
MR2													
4	1587cc	1.6	89-88	Supercharged	KF749-01		8 7/8	1 1/8	21T	*	SH5090	SH6022	*
			89-86	exc. Supercharged	K70079-02		8 3/8	15/16	21T	*	SH5090	SH6022	*
			85		K0076-01		7 7/8	15/16	21T	*	SH5090	SH6022	*
	1998cc	2.0	95-91	(fr. 12/91) Turbo	KF720-03		9 1/8	1 1/8	21T	*	*	SH6394	*
			91	(to 12/91) Turbo	KF720-03		9 1/8	1 1/8	21T	*	*	SH6369	*
	2164cc	2.2	95-91	(fr. 6/90)	K70064-02		8 7/8	1	20T	*	*	*	NFW6911
MR2 SPYDER													
4	1794cc	1.8	05-03	Sequential trans.	K70079-03		8 3/8	15/16	21T	*	*	*	NFW9122
			05-00	Non-Sequential trans.	K70079-03		8 3/8	15/16	21T	*	SH5260	SH6223	NFW9122
PASEO													
4	1497cc	1.5	98-92		K0076-01		7 7/8	15/16	21T	*	SH5092	SH6027	NFW6924
PASEO (CANADA ONLY)													
4	1497cc	1.5	99-92		K0076-01		7 7/8	15/16	21T	*	SH5092	SH6027	NFW6924

◎ Kit Only

* Not Available
Ø Components Available
Š Kit Includes Concentric Slave Cylinder
ƒ Kit Includes Flywheel

© 2014 ZF North American Operations, Inc. All Rights Reserved. No portion of this work may be reproduced or copied by any means without the prior approval of ZF North American Operations, Inc.

CLUTCH KIT

Cyl.	CC Cubic Inch	Liter	Year	Application Information	Clutch Kit	Notes Pg.180	Disc Size O.D.	Disc Size I.D.	Disc Size Teeth	PreFilled Master Or System	Master Cylinder	Slave Cylinder	Flywheel
TOYOTA (Cont'd)													
SOLARA													
4	2164cc	2.2	01-99		K70064-02		8 7/8	1	20T	*	SH5403	SH6081	NFW6911
	2362cc	2.4	08-07		KF718-03 ◎		9 5/16	1 1/8	21T	*	SH5260	SH6081	NFW9133
			06-04		KF718-02		9 1/4	1 1/8	21T	*	SH5260	SH6081	NFW9133
			03-02		KF718-02		9 1/4	1 1/8	21T	*	SH5403	SH6081	NFW9133
6	2995cc	3.0	02-99		KF718-02		9 1/4	1 1/8	21T	*	SH5403	SH6114	*
STARLET													
4	1290cc	1.3	83		KF613-01		7 1/2	3/4	19T	*	*	*	*
			82-81		KF596-01		7 1/8	13/16	19T	*	*	*	*
SUPRA													
6	2563cc	2.6	80-79		KF628-01		8 7/8	1 1/8	21T	*	SH5120	SH6428	*
	2754cc	2.8	85-82		K70062-02		9 1/4	1 1/8	21T	*	*	SH6038	*
	2759cc	2.8	81	(to 7/81)	KF628-01		8 7/8	1 1/8	21T	*	SH5120	SH6428	*
	2954cc	3.0	92-88	(fr. 11/88) Non-Turbo	K70062-01		9 1/4	1 1/8	21T	*	*	SH6038	*
			92-87	Turbo	KF717-01		9 3/8	1 1/8	21T	*	*	SH6431	*
			88-86	(to 7/88) Non-Turbo	K70062-02		9 1/4	1 1/8	21T	*	*	SH6038	*
	2997cc	3.0	98-94	6 Spd., Turbo	K70141-01	60	9 7/8	1 1/4	14T	*	*	SH6430	DMF91153
			97-95	5 Spd., Non-Turbo	K70062-01		9 1/4	1 1/8	21T	*	*	SH6430	NFW9137
			94	5 Spd., Non-Turbo	K70062-01		9 1/4	1 1/8	21T	*	*	SH6430	*
			93	Non-Turbo	K70062-01		9 1/4	1 1/8	21T	*	*	SH6038	*
				Turbo	KF717-01		9 3/8	1 1/8	21T	*	*	SH6431	*
TERCEL													
4	1452cc	1.5	88-87	Wagon	KF613-02		7 1/2	15/16	21T	*	SH5031	SH6027	*
			86-83	(fr. 6/82) incl. Wagon	KF613-02		7 1/2	15/16	21T	*	*	*	*
			82-80	(to 5/82) Sedan	KF601-01		7 1/2	15/16	21T	*	*	*	*
	1456cc	1.5	94-91	4 Spd.	K0076-01		7 7/8	15/16	21T	*	SH5092	SH6027	NFW6924
				5 Spd.	KF716-04		7 1/2	15/16	21T	*	SH5092	SH6027	NFW6924
			90-88	EZ	K70079-02		8 3/8	15/16	21T	*	SH5029	SH6027	*
			90-87	exc. EZ	KF716-04		7 1/2	15/16	21T	*	SH5029	SH6027	NFW6924
	1497cc	1.5	99-95		K0076-01		7 7/8	15/16	21T	*	SH5092	SH6027	NFW6924
YARIS													
4	1497cc	1.5	13-11		K70079-03		8 3/8	15/16	21T	*	SH5549	SH6517	*
			10-07		K70079-03		8 3/8	15/16	21T	*	SH5498	SH6517	*
YARIS (CANADA ONLY)													
4	1497cc	1.5	13-06		K70079-03		8 3/8	15/16	21T	*	SH5498	SH6517	*
TOYOTA LIGHT TRUCK & VAN													
FJ CRUISER													
6	3956cc	4.0	13-07		SK70440-1		9 7/8	1 1/8	21T	*	*	*	NFW9130
HI-LUX													
4	1968cc	2.0	74-72		KF628-04		8 7/8	1 1/8	21T	*	*	*	NFW6909
LAND CRUISER													
6	3878cc	3.9	74-67		KF559-01	2	10 7/8	1 3/32	10T	*	*	SH6359	*
			66-65		KF739-01	1,2	10 3/4	1 3/32	21T	*	*	SH6359	*
	4227cc	4.2	87-85		KF593-01		10 3/4	1 3/32	10T	*	*	SH6342	*
			84-81		KF593-01		10 3/4	1 3/32	10T	*	*	SH6222	*

◎ Kit Only

* Not Available
Ø Components Available
Š Kit Includes Concentric Slave Cylinder
ƒ Kit Includes Flywheel

© 2014 ZF North American Operations, Inc. All Rights Reserved. No portion of this work may be reproduced or copied by any means without the prior approval of ZF North American Operations, Inc.

SACHS

CLUTCH KIT

Cyl.	CC Cubic Inch	Liter	Year	Application Information	Clutch Kit	Notes Pg.180	Disc Size O.D.	Disc Size I.D.	Disc Size Teeth	PreFilled Master Or System	Master Cylinder	Slave Cylinder	Flywheel
TOYOTA LIGHT TRUCK & VAN (Cont'd)													
LAND CRUISER (Cont'd)													
6	4227cc	4.2	80-75		KF593-01		10 3/4	1 3/32	10T	*	*	SH6204	*
PICKUP													
4	1968cc	2.0	74-72		KF628-04		8 7/8	1 1/8	21T	*	*	*	NFW6909
	2188cc	2.2	83		KF628-01		8 7/8	1 1/8	21T	*	SH5037	SH6038	NFW6907
			82-81		KF628-01		8 7/8	1 1/8	21T	*	SH5037	SH6117	NFW6907
	2189cc	2.2	80	4WD	KF628-01		8 7/8	1 1/8	21T	*	SH5001	SH6118	*
			80-78	(fr. 8/78) 2WD	KF628-01		8 7/8	1 1/8	21T	*	SH5001	SH6003	*
			78-76	(fr. 9/76 to 7/78)	KF628-04		8 7/8	1 1/8	21T	*	SH5371	SH6118	*
			76-75	(to 8/76)	KF628-04		8 7/8	1 1/8	21T	*	SH5375	SH6118	NFW6909
	2366cc	2.4	95-89	2WD	KF628-02		8 7/8	1 1/8	21T	*	SH5030	SH6003	NFW6909
				4WD	K70062-03		9 1/4	1 1/8	21T	*	SH5030	SH6003	NFW6921
			88-87	(fr. 6/87) Turbo	K70062-03		9 1/4	1 1/8	21T	*	SH5001	SH6003	NFW6921
			88-81	Non-Turbo	KF628-01		8 7/8	1 1/8	21T	*	SH5001	SH6003	NFW6909
			87-86	(to 5/87) Turbo	K70062-02		9 1/4	1 1/8	21T	*	SH5001	SH6003	NFW6921
			85	Turbo	KF628-01		8 7/8	1 1/8	21T	*	SH5037	SH6038	NFW6909
6	2959cc	3.0	95-88		KF718-01	47	9 1/4	1 1/8	21T	*	SH5030	SH6003	NFW6915
PREVIA													
4	2438cc	2.4	93-91		K70062-01		9 1/4	1 1/8	21T	*	SH5463	SH6393	NFW6938
RAV4													
4	1998cc	2.0	03-01		KF709-01		9 1/4	1 1/8	21T	*	SH5350	SH6081	NFW9133
			00-97		KF709-01		9 1/4	1 1/8	21T	*	SH5411	SH6429	*
			96		KF709-01		9 1/4	1 1/8	21T	*	SH5411	SH6114	*
	2362cc	2.4	05-04		KF718-02		9 1/4	1 1/8	21T	*	SH5350	SH6081	NFW9133
TACOMA													
4	2438cc	2.4	04-96		K70062-01		9 1/4	1 1/8	21T	*	SH5262	SH6228	NFW6938
			95	2WD	KF628-02		8 7/8	1 1/8	21T	*	SH5262	SH6228	*
				4WD	K70062-03		9 1/4	1 1/8	21T	*	SH5262	SH6228	NFW6938
	2694cc	2.7	13-05		K70116-01		9 7/8	1 1/8	21T	*	*	SH6320	*
			04-95		K70116-02		9 7/8	1 1/8	21T	*	SH5262	SH6228	NFW9131
6	3378cc	3.4	04-95		K70165-01		9 7/8	1 1/8	21T	*	SH5262	SH6086	NFW6939
	3956cc	4.0	13-05		SK70440-1		9 7/8	1 1/8	21T	*	*	SH6316	NFW9130
TUNDRA													
6	3378cc	3.4	04-00		K70165-01		9 7/8	1 1/8	21T	*	SH5262	SH6086	NFW6939
	3956cc	4.0	06-05		SK70440-1		9 7/8	1 1/8	21T	*	SH5335	SH6316	NFW9130
T100													
4	2694cc	2.7	98-95		K70116-02		9 7/8	1 1/8	21T	*	SH5262	SH6003	NFW9131
			94		K70116-02		9 7/8	1 1/8	21T	*	SH5262	SH6427	*
6	2959cc	3.0	94-93	2WD	KF718-01		9 1/4	1 1/8	21T	*	SH5262	SH6003	NFW6915
				4WD	K70116-01		9 7/8	1 1/8	21T	*	SH5262	SH6003	*
	3378cc	3.4	98-95		K70165-01		9 7/8	1 1/8	21T	*	SH5262	SH6086	NFW6939
VAN													
4	1998cc	2.0	85-84		KF628-01		8 7/8	1 1/8	21T	*	*	SH6003	*
	2237cc	2.2	89		KF628-03		8 7/8	1 1/8	21T	*	*	SH6003	*
			88-86		KF628-01		8 7/8	1 1/8	21T	*	*	SH6003	*

* Not Available
Ø Components Available
Š Kit Includes Concentric Slave Cylinder
ƒ Kit Includes Flywheel

© 2014 ZF North American Operations, Inc. All Rights Reserved. No portion of this work may be reproduced or copied by any means without the prior approval of ZF North American Operations, Inc.

CLUTCH KIT

Cyl.	CC Cubic Inch	Liter	Year	Application Information	Clutch Kit	Notes Pg.180	Disc Size O.D.	Disc Size I.D.	Disc Size Teeth	PreFilled Master Or System	Master Cylinder	Slave Cylinder	Flywheel
TOYOTA LIGHT TRUCK & VAN (Cont'd)													
4RUNNER													
4	2366cc	2.4	95-93	4WD	K70062-03		9 1/4	1 1/8	21T	*	SH5030	SH6003	NFW6921
			94-90	2WD	KF628-02		8 7/8	1 1/8	21T	*	SH5030	SH6003	NFW6909
			88-84	Non-Turbo	KF628-01		8 7/8	1 1/8	21T	*	SH5001	SH6003	NFW6909
			87	Turbo	K70062-03		9 1/4	1 1/8	21T	*	SH5001	SH6003	NFW6921
	2694cc	2.7	00-96		K70116-02		9 7/8	1 1/8	21T	*	SH5461	SH6228	NFW9131
6	2954cc	3.0	95-88		KF718-01	47	9 1/4	1 1/8	21T	*	SH5030	SH6003	NFW6915
	3378cc	3.4	00-96		K70165-01		9 7/8	1 1/8	21T	*	SH5461	SH6086	NFW6939
TRIUMPH													
SPITFIRE													
4	1493cc	1.5	80-75		KF322-02 ◎		7 1/4	7/8	20T	*	*	*	*
TR4A													
4	2130cc	2.1	67-65		KF393-04 ◎		8 1/2	1 1/4	10T	*	*	*	*
TR6													
6	2498cc	2.5	75-69		KF393-04 ◎		8 1/2	1 1/4	10T	*	*	*	*
TR250													
6	2498cc	2.5	68		KF393-04 ◎		8 1/2	1 1/4	10T	*	*	*	*
VOLKSWAGEN													
BEETLE													
4	1192cc	1.2	65-54		KF182-02		7 1/8	13/16	24T	*	*	*	*
				Optional Kit/Rigid Hub Disc	KF182-01	14	7 1/8	13/16	24T	*	*	*	*
	1285cc	1.3	66	(to 8/66)	KF182-02		7 1/8	13/16	24T	*	*	*	*
				Optional Kit/Rigid Hub Disc	KF182-01	14	7 1/8	13/16	24T	*	*	*	*
	1457cc	1.5	69-67	(to 7/70)	KF193-01	64	7 7/8	13/16	24T	*	*	*	*
				Optional Kit/Rigid Hub Disc	KF193-02	14,64	7 7/8	13/16	24T	*	*	*	*
	1584cc	1.6	79-71		KF224-01		7 7/8	13/16	24T	*	*	*	*
				Optional Kit/Rigid Hub Disc	KF224-02	14	7 7/8	13/16	24T	*	*	*	*
			70		KF193-01	64	7 7/8	13/16	24T	*	*	*	*
				Optional Kit/Rigid Hub Disc	KF193-02	14,64	7 7/8	13/16	24T	*	*	*	*
	1781cc	1.8	05-01	(fr. ch. #1C-Y-497 072) 5 Spd., Kit w/o DMF	K70319-01 ◎	60	8 7/8	7/8	28T	*	SH5162	SH6144	*
				(fr. ch. #1C-Y-497 072) 5 Spd., Kit w/ DMF	K70319-01F ◎	10,60	8 7/8	7/8	28T	*	SH5162	SH6144	*
				(fr. ch. #1C-Y-497 072) 5 Spd., Kit w/ Solid Flywheel	K70038-02F		9	7/8	28T	*	SH5162	SH6144	*
			04-02	6 Spd., Turbo S	K70287-02 Š	60	9 7/16	15/16	23T	*	SH5162	SB60126	DMF91126
			01-99	(to ch. #1C-Y-497 071) 5 Spd., Kit for LuK DMF	K70249-01 ◎	60	8 5/8	7/8	28T	*	SH5162	SH6144	*
	1896cc	1.9	06-98	Must use with SACHS DMF	K70316-01 ◎	60	9	7/8	28T	*	SH5162	SH6144	DMF91166
				SACHS Kit w/ DMF	K70316-01F ◎	10,60	9	7/8	28T	*	SH5162	SH6144	*
			03-98	Must use with LuK DMF	K70249-01 ◎		8 5/8	7/8	28T	*	SH5162	SH6144	*
	1968cc	2.0	13	TDI - LuK Kit	K70641-01 Š◎		9 29/64	15/16	23T	*	SH5495	SB60126	*
				TDI - SACHS Kit	K70713-01 Š◎					*	SH5495	SB60126	*
	1984cc	2.0	13-12	Turbo	K70485-02 Š◎	60	9 7/16	15/16	23T	*	SH5495	SB60126	DMF91158
			05-98		K70106-02		8 3/4	7/8	28T	*	SH5162	SH6144	*

◎ Kit Only

* Not Available
Ø Components Available
Š Kit Includes Concentric Slave Cylinder
ƒ Kit Includes Flywheel

© 2014 ZF North American Operations, Inc. All Rights Reserved. No portion of this work may be reproduced or copied by any means without the prior approval of ZF North American Operations, Inc.

SACHS

CLUTCH KIT

Cyl.	CC Cubic Inch	Liter	Year	Application Information	Clutch Kit	Notes Pg.180	Disc Size O.D.	Disc Size I.D.	Disc Size Teeth	PreFilled Master Or System	Master Cylinder	Slave Cylinder	Flywheel
VOLKSWAGEN (Cont'd)													
BEETLE (Cont'd)													
5	2480cc	2.5	13-12	Base	K70639-01 ◎		9 7/16	7/8	28T	*	SH5495	SH6321	*
			10-06	Must Use w/SACHS DMF	K70422-03 ◎	60	9	7/8	28T	*	SH5162	SH6321	DMF91181
				w/ Solid Flywheel	K70638-02F ◎	60	9	7/8	28T	*	SH5162	SH6321	*
				Kit w/ SACHS DMF	K70422-03F ◎	60	9	7/8	28T	*	SH5162	SH6321	DMF91181
CABRIO													
4	1984cc	2.0	02-95		K70128-03	31,49	8 1/4	7/8	28T	*	SH5162	*	NFW7201
				Optional Kit/Non-Predamp Disc	K70128-01		8 1/4	7/8	28T	*	SH5162	*	NFW7201
CABRIOLET													
4	1780cc	1.8	93-85		KF785-02	31,49	8 1/4	13/16	24T	*	*	*	*
CAMPMOBILE													
4	1584cc	1.6	71		KF224-01		7 7/8	13/16	24T	*	*	*	*
				Optional Kit/Rigid Hub Disc	KF224-02	14	7 7/8	13/16	24T	*	*	*	*
			70-68		KF193-01	64	7 7/8	13/16	24T	*	*	*	*
				Optional Kit/Rigid Hub Disc	KF193-02	14,64	7 7/8	13/16	24T	*	*	*	*
	1679cc	1.7	73-72		KF225-01 ◎		8 1/4	13/16	24T	*	*	*	*
	1795cc	1.8	74	(fr. ch. #214212 5001)	KF229-01 ◎		8 1/2	13/16	24T	*	*	*	*
				(to ch. #214212 5000)	KF225-01 ◎		8 1/4	13/16	24T	*	*	*	*
CC													
4	1984cc	2.0	13-09	Turbo	K70485-02 Š◎	60	9 7/16	15/16	23T	*	SH5443	SB60126	DMF91158
CORRADO													
4	1780cc	1.8	92-90		K70038-01 ◎		9	7/8	28T	*	SH5412	SH6432	*
6	2792cc	2.8	94-93	(fr. 9/93)	K70038-02 ◎		9	7/8	28T	*	SH5396	SH6432	NFW7206
			93-92	(to 8/93)	K70038-01 ◎		9	7/8	28T	*	SH5412	SH6432	*
CORRADO (CANADA ONLY)													
6	2792cc	2.8	95-93	(fr. 9/93)	K70038-02 ◎		9	7/8	28T	*	SH5396	SH6432	NFW7206
			93-92	(to 8/93)	K70038-01 ◎		9	7/8	28T	*	SH5412	SH6432	*
DASHER													
4	1471cc	1.5	80-79		KF116-01		7 1/2	13/16	24T	*	*	*	*
			75-74	(fr. 2/73)	KF116-01		7 1/2	13/16	24T	*	*	*	*
	1588cc	1.6	81		KF116-01		7 1/2	13/16	24T	*	*	*	*
			80-76	Replaces O.E. 7 1/2" Clutch	KF294-02 ◎		8	13/16	24T	*	*	*	*
EOS													
4	1984cc	2.0	11-10		K70485-02 Š◎	60	9 7/16	15/16	23T	*	SH5495	SB60126	DMF91158
			09	exc. BPY eng.	K70485-02 Š◎	60	9 7/16	15/16	23T	*	SH5495	SB60126	DMF91158
			09-07	BPY eng.	K70466-01 Š◎		9 7/16	15/16	23T	*	SH5495	SB60126	*
				Optional SACHS Kit	K70485-02 Š◎	60	9 7/16	15/16	23T	*	SH5495	SB60126	DMF91162
FASTBACK													
4	1584cc	1.6	73-71		KF224-01		7 7/8	13/16	24T	*	*	*	*
				Optional Kit/Rigid Hub Disc	KF224-02	14	7 7/8	13/16	24T	*	*	*	*
			70-66		KF193-01	64	7 7/8	13/16	24T	*	*	*	*
				Optional Kit/Rigid Hub Disc	KF193-02	14,64	7 7/8	13/16	24T	*	*	*	*
FOX													
4	1780cc	1.8	93-87		KF764-01		8 1/4	13/16	24T	*	*	*	*
GOLF													
4	1588cc	1.6	92-90	(fr. ch. #1G-L-015952)	K0028-07	31,49	7 7/8	13/16	24T	*	*	*	*

◎ Kit Only

* Not Available
Ø Components Available
Š Kit Includes Concentric Slave Cylinder
ƒ Kit Includes Flywheel

© 2014 ZF North American Operations, Inc. All Rights Reserved. No portion of this work may be reproduced or copied by any means without the prior approval of ZF North American Operations, Inc.

CLUTCH KIT

Cyl.	CC Cubic Inch	Liter	Year	Application Information	Clutch Kit	Notes Pg.180	Disc Size O.D.	Disc Size I.D.	Disc Size Teeth	PreFilled Master Or System	Master Cylinder	Slave Cylinder	Flywheel
VOLKSWAGEN (Cont'd)													
GOLF (Cont'd)													
4	1588cc	1.6	90-85	(to ch. #1G-L-015951)	K0028-03	49	8	13/16	24T	*	*	*	*
	1780cc	1.8	92-85	exc. GTI 16-Valve	KF785-02	31,49	8 1/4	13/16	24T	*	*	*	*
			89-87	GTI 16-Valve	K70037-04	31,49	8 1/4	7/8	28T	*	*	*	*
				Optional Kit/Predamp Disc	K70037-02	31	8 1/4	7/8	28T	*	*	*	*
	1781cc	1.8	06-00	5 Spd., Kit w/o DMF	K70319-01 ◎	60	8 7/8	7/8	28T	*	SH5162	SH6144	*
				5 Spd., Kit w/ DMF	K70319-01F ◎	10,60	8 7/8	7/8	28T	*	SH5162	SH6144	*
				5 Spd., Kit w/ Solid Flywheel	K70038-02F		9	7/8	28T	*	SH5162	SH6144	*
			03-02	6 Spd.	K70287-02 Š	60	9 7/16	15/16	23T	*	SH5162	SB60126	DMF91126
	1896cc	1.9	06-99	SACHS - Kit w/o DMF	K70316-01 ◎	60	9	7/8	28T	*	SH5162	SH6144	DMF91166
				Kit w/ SACHS DMF	K70316-01F ◎	10,60	9	7/8	28T	*	SH5162	SH6144	*
			03-99	Must use with LuK Kit for DMF	K70249-01 ◎		8 5/8	7/8	28T	*	SH5162	SH6144	*
	1968cc	2.0	13-12	TDI, LuK Kit	K70641-01 ◎		9 29/64	15/16	23T	*	SH5495	*	*
				TDI, SACHS Kit	K70657-01 Š	60				*	SH5495	*	DMF91178
			11-10	TDI, LuK Kit	K70468-01 Š◎		9 7/16	15/16	23T	*	SH5495	SB60126	*
				TDI, SACHS Kit	K70657-01 Š	60				*	SH5495	SB60126	DMF91178
	1984cc	2.0	13-12	R - Turbo	K70485-02 Š◎	60	9 7/16	15/16	23T	*	SH5495	SB60126	*
			06-00		K70106-02		8 3/4	7/8	28T	*	SH5162	SH6144	*
			99	AEG eng.	K70106-02		8 3/4	7/8	28T	*	SH5162	SH6144	*
			99-94	(fr. ch.#1H-R-038601) exc. AEG eng.	K70128-03	31,49	8 1/4	7/8	28T	*	*	*	NFW7201
				Optional Kit/Non-Predamp Disc	K70128-01	31	8 1/4	7/8	28T	*	*	*	NFW7201
			94-93	(to ch.#1H-R-038600)	K70037-04	31,49	8 1/4	7/8	28T	*	*	*	*
			92-90		K70037-04	31,49	8 1/4	7/8	28T	*	*	*	*
				Optional Kit/Predamp Disc	K70037-02	31	8 1/4	7/8	28T	*	*	*	*
5	2480cc	2.5	13-12	Base	K70639-01 ◎		9 7/16	7/8	28T	*	SH5495	SH6321	*
			11-10	Must Use w/SACHS DMF	K70422-03 ◎	60	9	7/8	28T	*	SH5495	SH6321	DMF91181
				w/ Solid Flywheel	K70638-02F ◎	60	9	7/8	28T	*	SH5495	SH6321	*
				Kit w/ SACHS DMF	K70422-03F ◎	60	9	7/8	28T	*	SH5495	SH6321	DMF91181
6	2792cc	2.8	05-02	BDF eng.	K70287-02 Š	60	9 7/16	15/16	23T	*	SH5162	SB60126	DMF91145
			02-99	AFP eng.	K70038-02 ◎		9	7/8	28T	*	SH5162	SH6144	NFW7206
			98-95	AAA eng.	K70038-02 ◎		9	7/8	28T	*	SH5162	SH6432	NFW7206
	3189cc	3.2	04		K70402-01 Š◎	60	9 1/4	15/16	23T	*	SH5162	SB60126	DMF91142
GOLF (CANADA ONLY)													
4	1800cc	1.8	97-94	(fr. ch.#1H-R-038601)	K70128-04	31,49	8 1/4	13/16	24T	*	*	*	*
			94-93	(to ch.#1H-R-038600)	KF785-02	31,49	8 1/4	13/16	24T	*	*	*	*
	1896cc	1.9	98	TDI	K70038-01 ◎		9	7/8	28T	*	SH5162	*	*
			97-96	TDI	K70038-01 ◎	49	9	7/8	28T	*	*	*	*
			97-94	(fr. ch.#1H-R-038601)	K70128-02	31,49	8 1/4	13/16	24T	*	*	*	*
			94-93	(to ch.#1H-R-038600)	KF785-03	31,49	8 1/4	13/16	24T	*	*	*	*
GTI													
4	1984cc	2.0	13-09		K70485-02 Š◎	60	9 7/16	15/16	23T	*	SH5495	SB60126	DMF91158
			08	exc. BPY eng.	K70485-02 Š◎	60	9 7/16	15/16	23T	*	SH5495	SB60126	DMF91158
			08-06	BPY eng.	K70466-01 Š◎		9 7/16	15/16	23T	*	SH5495	SB60126	*
				Optional SACHS Kit	K70485-02 Š◎	60	9 7/16	15/16	23T	*	SH5495	SB60126	DMF91162

◎ Kit Only

* Not Available
Ø Components Available
Š Kit Includes Concentric Slave Cylinder
ƒ Kit Includes Flywheel

© 2014 ZF North American Operations, Inc. All Rights Reserved. No portion of this work may be reproduced or copied by any means without the prior approval of ZF North American Operations, Inc.

SACHS

CLUTCH KIT

Cyl.	CC Cubic Inch	Liter	Year	Application Information	Clutch Kit	Notes Pg.180	Disc Size O.D.	Disc Size I.D.	Disc Size Teeth	PreFilled Master Or System	Master Cylinder	Slave Cylinder	Flywheel
VOLKSWAGEN (Cont'd)													
JETTA													
4	1588cc	1.6	92-90	(fr. ch. #1G-L-015952)	K0028-07	31,49	7 7/8	13/16	24T	*	*	*	*
			90-85	(to ch. #1G-L-015951)	K0028-03	49	8	13/16	24T	*	*	*	*
			84-83	Optional HD Kit for Turbo M480	K70037-05	31,49	8 1/4	13/16	24T	*	*	*	*
			84-81		K0028-03	49	8	13/16	24T	*	*	*	*
			80		K1886-04	31,49	7 1/2	13/16	24T	*	*	*	*
	1715cc	1.7	84-81		K1886-04	31,49	7 1/2	13/16	24T	*	*	*	*
	1780cc	1.8	92-85	exc. GTI 16-Valve	KF785-02	31,49	8 1/4	13/16	24T	*	*	*	*
			89-87	GTI 16-Valve	K70037-04	31,49	8 1/4	7/8	28T	*	*	*	*
				Optional Kit/Predamp Disc	K70037-02	31	8 1/4	7/8	28T	*	*	*	*
			84		KF785-02	31,49	8 1/4	13/16	24T	*	*	*	*
	1781cc	1.8	05-04	6 Spd.	K70287-02 Š	60	9 7/16	15/16	23T	*	SH5162	SB60126	DMF91126
			05-00	5 Spd., Kit w/o DMF	K70319-01 ◎	60	8 7/8	7/8	28T	*	SH5162	SH6144	*
				5 Spd., Kit w/ DMF	K70319-01F ◎	10,60	8 7/8	7/8	28T	*	SH5162	SH6144	*
				5 Spd., Kit w/ Solid Flywheel	K70038-02F		9	7/8	28T	*	SH5162	SH6144	*
	1896cc	1.9	06-05	TDI (BRM eng.), SACHS Kit, Must Use w/SACHS DMF	K70422-03 ◎	60	9	7/8	28T	*	SH5495	SH6321	DMF91180
				TDI (BRM eng.), LuK Kit	K70423-01 ◎		9 1/8	7/8	28T	*	SH5495	SH6321	*
				TDI (BRM eng.), SACHS Kit w/DMF	K70422-04F ◎	60	9	7/8	28T	*	SH5495	SH6321	DMF91180
			05-00	TDI (ALH & BEW eng.), Kit for SACHS DMF	K70316-01 ◎	60	9	7/8	28T	*	SH5162	SH6144	DMF91166
				Optional Kit w/ DMF	K70316-01F ◎	10,60	9	7/8	28T	*	SH5162	SH6144	*
			03-99	TDI (ALH eng.), Kit for Luk DMF	K70249-01 ◎		8 5/8	7/8	28T	*	SH5162	SH6144	*
			99	New Body Style (ALH eng.), Kit for SACHS DMF	K70316-01 ◎	60	9	7/8	28T	*	SH5162	SH6144	DMF91166
				Optional Kit w/ DMF	K70316-01F ◎	10,60	9	7/8	28T	*	SH5162	SH6144	*
				New Body Style (ALH eng.), Kit for LuK DMF	K70249-01 ◎		8 5/8	7/8	28T	*	SH5162	SH6144	*
			99-97	Old Body Style (AHU eng.)	K70038-01 ◎	49	9	7/8	28T	*	SH5162	SH6432	*
	1968cc	2.0	13-12	TDI, LuK Kit	K70641-01 ◎		9 29/64	15/16	23T	*	SH5495	SB60126	*
			13-11	TDI, SACHS Kit	K70657-01 Š	60				*	SH5495	SB60126	DMF91159
			11-09	TDI, LuK Kit	K70468-01 Š◎		9 7/16	15/16	23T	*	SH5495	SB60126	*
			10-09	TDI, SACHS Kit	K70446-01 Š◎	60	9 7/16	15/16	23T	*	SH5495	SB60126	DMF91159
				Optional Kit w/ DMF	K70446-01F ◎♈	60	9 7/16	15/16	23T	*	SH5495	SB60126	*
	1984cc	2.0	13-12	GLI - Turbo	K70485-02 Š◎	60	9 7/16	15/16	23T	*	SH5495	SB60126	DMF91158
			13-11	Non-Turbo	K70640-01		8 21/32	7/8	28T	*	SH5495	SH6321	*
			10-08	exc. BPY eng.	K70485-02 Š◎	60	9 7/16	15/16	23T	*	SH5495	SB60126	DMF91158
			08-06	(fr. ch #1K-6-855 695) BPY eng.	K70466-01 Š◎		9 7/16	15/16	23T	*	SH5495	SB60126	*
			06	(to ch #1K-6-855 694)	K70466-01 Š◎	60	9 7/16	15/16	23T	*	SH5495	SB60126	DMF91162
			05-00		K70106-02		8 3/4	7/8	28T	*	SH5162	SH6144	*
			99	New Body Style (AEG eng.)	K70106-02		8 3/4	7/8	28T	*	SH5162	SH6144	*
				Old Body Style (ABA eng.)	K70128-03	31,49,61	8 1/4	7/8	28T	*	*	*	NFW7201
			98-94	(fr. ch.#1H-R-038601)	K70128-03	31,49,61	8 1/4	7/8	28T	*	*	*	NFW7201
			94-93	(to ch.#1H-R-038600)	K70037-04	31,49,61	8 1/4	7/8	28T	*	*	*	*
			92-90		K70037-04	31,49	8 1/4	7/8	28T	*	*	*	*
				Optional Kit/Predamp Disc	K70037-02	31	8 1/4	7/8	28T	*	*	*	*

◎ Kit Only
♈ Kit does not include Concentric Slave Cylinder and/or Release Bearing (Sold Separately)

* Not Available
Ø Components Available
Š Kit Includes Concentric Slave Cylinder
ƒ Kit Includes Flywheel

© 2014 ZF North American Operations, Inc. All Rights Reserved. No portion of this work may be reproduced or copied by any means without the prior approval of ZF North American Operations, Inc.

CLUTCH KIT

Cyl.	CC Cubic Inch	Liter	Year	Application Information	Clutch Kit	Notes Pg.180	Disc Size O.D.	Disc Size I.D.	Disc Size Teeth	PreFilled Master Or System	Master Cylinder	Slave Cylinder	Flywheel
VOLKSWAGEN (Cont'd)													
JETTA (Cont'd)													
5	2480cc	2.5	13-11		K70639-01 ◎		9 7/16	7/8	28T	*	SH5495	SH6321	*
			10-05	Must Use w/SACHS DMF	K70422-03 ◎	60	9	7/8	28T	*	SH5495	SH6321	DMF91181
				w/ Solid Flywheel	K70638-02F ◎	60	9	7/8	28T	*	SH5495	SH6321	*
				Kit w/ SACHS DMF	K70422-03F ◎	60	9	7/8	28T	*	SH5495	SH6321	DMF91181
6	2792cc	2.8	04-02	BDF eng.	K70287-02 Š	60	9 7/16	15/16	23T	*	SH5162	SB60126	DMF91145
			02-99	AFP eng.	K70038-02 ◎		9	7/8	28T	*	SH5162	SH6144	NFW7206
			99-94	AAA eng.	K70038-02 ◎		9	7/8	28T	*	SH5162	SH6432	NFW7206
JETTA (CANADA ONLY)													
4	1800cc	1.8	95-94	(fr. ch.#1H-R-038601)	K70128-04	31,49	8 1/4	13/16	24T	*	*	*	*
			94-93	(to ch.#1H-R-038600)	KF785-02	31,49	8 1/4	13/16	24T	*	*	*	*
	1896cc	1.9	97-94	(fr. ch.#1H-R-038601)	K70128-02	31,49	8 1/4	13/16	24T	*	*	*	*
			94-93	(to ch.#1H-R-038600)	KF785-03	31,49	8 1/4	13/16	24T	*	*	*	*
KARMANN GHIA													
4	1192cc	1.2	65-56		KF182-02		7 1/8	13/16	24T	*	*	*	*
				Optional Kit/Rigid Hub Disc	KF182-01	14	7 1/8	13/16	24T	*	*	*	*
	1285cc	1.3	66		KF182-02		7 1/8	13/16	24T	*	*	*	*
				Optional Kit/Rigid Hub Disc	KF182-01	14	7 1/8	13/16	24T	*	*	*	*
	1457cc	1.5	69-67		KF193-01	64	7 7/8	13/16	24T	*	*	*	*
				Optional Kit/Rigid Hub Disc	KF193-02	14,64	7 7/8	13/16	24T	*	*	*	*
	1584cc	1.6	73-71		KF224-01		7 7/8	13/16	24T	*	*	*	*
				Optional Kit/Rigid Hub Disc	KF224-02	14	7 7/8	13/16	24T	*	*	*	*
			70		KF193-01	64	7 7/8	13/16	24T	*	*	*	*
				Optional Kit/Rigid Hub Disc	KF193-02	14,64	7 7/8	13/16	24T	*	*	*	*
PASSAT													
4	1781cc	1.8	05-04		K70205-01 ◎	60	9	15/16	23T	*	SH5161	SH6142	DMF91148
			03-98		K70205-01 ◎	60	9	15/16	23T	*	SH5161	SH6142	DMF91115
				w/ Solid Flywheel	K70771-01F ◎		9	15/16	23T	*	SH5161	SH6142	*
	1896cc	1.9	97-96		K70038-01 ◎		9	7/8	28T	*	SH5165	SH6432	*
			94-93		K70106-01		8 1/2	1	28T	*	*	*	*
	1968cc	2.0	13	TDI SE, LuK Kit	K70641-01 ◎		9 29/64	15/16	23T	*	SH5495	*	*
				TDI SE, SACHS Kit	K70657-01 Š	60				*	SH5495	*	DMF91178
			12	TDI SE, SACHS Kit	K70657-01 Š	60				*	SH5495	SB60126	DMF91178
				TDI SE, LuK Kit	K70468-01 Š◎		9 7/16	15/16	23T	*	SH5495	SB60126	*
	1984cc	2.0	08	BPY eng.	K70466-01 Š◎	60	9 7/16	15/16	23T	*	SH5443	SB60126	DMF91162
				exc. BPY eng.	K70485-02 Š◎	60	9 7/16	15/16	23T	*	SH5443	SB60126	DMF91158
			07-06	BPY eng.	K70466-01 Š◎	60	9 7/16	15/16	23T	*	SH5533	SB60126	DMF91162
			96		K70038-01 ◎		9	7/8	28T	*	SH5165	SH6432	*
			95-90		K70038-01 ◎		9	7/8	28T	*	SH5412	SH6432	*
5	2480cc	2.5	13-12		K70639-01 ◎		9 7/16	7/8	28T	*	SH5495	SH6321	*
6	2771cc	2.8	05-98		K70007-01 ◎	60	9 1/2	15/16	23T	*	SH5161	SH6142	DMF91119
	2792cc	2.8	97-93		K70038-02 ◎		9	7/8	28T	*	SH5396	SH6432	NFW7206
8	3998cc	4.0	04-03	(fr. ch. #3B-3P381 028)	K70336-01 ◎		9 1/2	15/16	23T	*	SH5268	*	*
			03	(to ch. #3B-3P381 027)	K70286-01 ◎		9 1/2	15/16	23T	*	SH5268	*	*

◎ Kit Only

* Not Available
Ø Components Available
Š Kit Includes Concentric Slave Cylinder
ƒ Kit Includes Flywheel

© 2014 ZF North American Operations, Inc. All Rights Reserved. No portion of this work may be reproduced or copied by any means without the prior approval of ZF North American Operations, Inc.

SACHS

CLUTCH KIT

Cyl.	CC Cubic Inch	Liter	Year	Application Information	Clutch Kit	Notes Pg.180	Disc Size O.D.	Disc Size I.D.	Disc Size Teeth	PreFilled Master Or System	Master Cylinder	Slave Cylinder	Flywheel
VOLKSWAGEN (Cont'd)													
PASSAT (CANADA ONLY)													
4	1896cc	1.9	94-93		K70038-01 ◎		9	7/8	28T	*	SH5412	SH6432	*
PASSAT CC (CANADA ONLY)													
4	1984cc	2.0	10-09		K70485-02 Š◎	60	9 7/16	15/16	23T	*	SH5443	SB60126	DMF91158
QUANTUM													
4	1588cc	1.6	85-82		KF294-02 ◎		8	13/16	24T	*	*	*	*
	1715cc	1.7	83-82		KF294-02 ◎		8	13/16	24T	*	*	*	*
	1780cc	1.8	85-84		KF294-01 ◎		8 1/4	13/16	24T	*	*	*	*
5	2144cc	2.2	84-83		KF117-02 ◎		8 1/2	13/16	24T	*	*	*	*
	2226cc	2.2	88-85	(fr. ch. #32-F-300000) exc. Syncro	KF122-01 ◎		9	13/16	24T	*	*	SH6400	*
			87-86	Syncro	KF122-01 ◎		9	13/16	24T	*	*	*	*
			85	(to ch. #32-F-299999) exc. Syncro	KF117-02 ◎		8 1/2	13/16	24T	*	*	*	*
RABBIT													
4	1457cc	1.5	80-78	Gas	K1886-04	31,49	7 1/2	13/16	24T	*	*	*	*
	1471cc	1.5	80	Diesel	K0028-03	49	8	13/16	24T	*	*	*	*
			79-77	Diesel	K1886-04	31,49	7 1/2	13/16	24T	*	*	*	*
	1588cc	1.6	84-81		K0028-03	49	8	13/16	24T	*	*	*	*
			77-76		K1886-04	31,49	7 1/2	13/16	24T	*	*	*	*
	1715cc	1.7	84-83	8" Clutch	K0028-03	49	8	13/16	24T	*	*	*	*
			83-81	7 1/2" Clutch	K1886-04	31,49	7 1/2	13/16	24T	*	*	*	*
	1780cc	1.8	84-83	GTI	KF785-02	31,49	8 1/4	13/16	24T	*	*	*	*
5	2480cc	2.5	09-06	Must Use w/SACHS DMF	K70422-03 ◎	60	9	7/8	28T	*	SH5495	SH6321	DMF91181
				w/ Solid Flywheel	K70638-02F ◎	60	9	7/8	28T	*	SH5495	SH6321	*
				Kit w/ SACHS DMF	K70422-03F ◎	60	9	7/8	28T	*	SH5495	SH6321	DMF91181
RABBIT (CANADA ONLY)													
4	1471cc	1.5	80	Diesel	K1886-04	31,49	7 1/2	13/16	24T	*	*	*	*
RABBIT CONVERTIBLE													
4	1588cc	1.6	80		K1886-04	31,49	7 1/2	13/16	24T	*	*	*	*
	1715cc	1.7	83-81		K1886-04	31,49	7 1/2	13/16	24T	*	*	*	*
SCIROCCO													
4	1471cc	1.5	75		K1886-04	31,49	7 1/2	13/16	24T	*	*	*	*
	1588cc	1.6	80-76		K1886-04	31,49	7 1/2	13/16	24T	*	*	*	*
	1715cc	1.7	83-81		K1886-04	31	7 1/2	13/16	24T	*	*	*	*
	1780cc	1.8	89-84	exc. 16-Valve	KF785-02	31,49	8 1/4	13/16	24T	*	*	*	*
			88-87	16-Valve	K70037-02	31,49	8 1/4	7/8	28T	*	*	*	*
SQUAREBACK													
4	1584cc	1.6	73-71		KF224-01		7 7/8	13/16	24T	*	*	*	*
				Optional Kit/Rigid Hub Disc	KF224-02	14	7 7/8	13/16	24T	*	*	*	*
			70-66		KF193-01	64	7 7/8	13/16	24T	*	*	*	*
				Optional Kit/Rigid Hub Disc	KF193-02	14,64	7 7/8	13/16	24T	*	*	*	*
SUPER BEETLE													
4	1584cc	1.6	73-71		KF224-01		7 7/8	13/16	24T	*	*	*	*
				Optional Kit/Rigid Hub Disc	KF224-02	14	7 7/8	13/16	24T	*	*	*	*
THING													
4	1584cc	1.6	73		KF224-01		7 7/8	13/16	24T	*	*	*	*
				Optional Kit/Rigid Hub Disc	KF224-02	14	7 7/8	13/16	24T	*	*	*	*

◎ Kit Only

* Not Available
Ø Components Available
Š Kit Includes Concentric Slave Cylinder
ƒ Kit Includes Flywheel

© 2014 ZF North American Operations, Inc. All Rights Reserved. No portion of this work may be reproduced or copied by any means without the prior approval of ZF North American Operations, Inc.

CLUTCH KIT

Cyl.	CC Cubic Inch	Liter	Year	Application Information	Clutch Kit	Notes Pg.180	Disc Size O.D.	Disc Size I.D.	Disc Size Teeth	PreFilled Master Or System	Master Cylinder	Slave Cylinder	Flywheel
VOLKSWAGEN (Cont'd)													
TRANSPORTER													
4	1192cc	1.2	65-54		KF182-02		7 1/8	13/16	24T	*	*	*	*
				Optional Kit/Rigid Hub Disc	KF182-01	14	7 1/8	13/16	24T	*	*	*	*
	1457cc	1.5	67-64		KF193-01	64	7 7/8	13/16	24T	*	*	*	*
				Optional Kit/Rigid Hub Disc	KF193-02	14,64	7 7/8	13/16	24T	*	*	*	*
	1584cc	1.6	72-71		KF224-01		7 7/8	13/16	24T	*	*	*	*
				Optional Kit/Rigid Hub Disc	KF224-02	14	7 7/8	13/16	24T	*	*	*	*
			70-68		KF193-01	64	7 7/8	13/16	24T	*	*	*	*
				Optional Kit/Rigid Hub Disc	KF193-02	14,64	7 7/8	13/16	24T	*	*	*	*
	1679cc	1.7	73-72		KF225-01 ◎		8 1/4	13/16	24T	*	*	*	*
	1795cc	1.8	75-74	(fr. ch. #214212 5001)	KF229-01 ◎		8 1/2	13/16	24T	*	*	*	*
			74	(to ch. #214212 5000)	KF225-01 ◎		8 1/4	13/16	24T	*	*	*	*
411													
4	1679cc	1.7	72		KF225-01 ◎		8 1/4	13/16	24T	*	*	*	*
412													
4	1679cc	1.7	73		KF225-01 ◎		8 1/4	13/16	24T	*	*	*	*
VOLKSWAGEN LIGHT TRUCK & VAN													
EUROVAN													
5	2459cc	2.5	95-93		K70038-01 ◎		9	7/8	28T	*	*	SH6432	*
EUROVAN (CANADA ONLY)													
5	2400cc	2.4	97-96	(fr. #370 181)	K70248-01 ◎		8 5/8	7/8	28T	*	SH5465	SH6144	*
			96-93	(to #370 180)	K70038-01 ◎		9	7/8	28T	*	SH5465	SH6432	*
RABBIT PICKUP													
4	1588cc	1.6	83-80	incl. Diesel	K0028-03	49	8	13/16	24T	*	*	*	*
	1715cc	1.7	83-81		K0028-03	49	8	13/16	24T	*	*	*	*
TIGUAN													
4	1984cc	2.0	13-09	S	K70465-01 Š◎	60	9 7/16	1 1/8	26T	*	SH5443	SB60126	DMF91158
VANAGON													
4	1588cc	1.6	84-82		KF288-01 ◎		8 1/2	3/4	24T	*	SH5388	SH6025	*
	1915cc	1.9	85-83	(fr. eng. # 002 309) (fr. 3/83)	KF251-01		9	13/16	24T	*	*	SH6025	*
			83	(to eng. # 002 308) (to 3/83)	KF229-01 ◎		8 1/2	13/16	24T	*	*	SH6025	*
	1970cc	2.0	83-82	(to 1/83)	KF251-01		9	13/16	24T	*	*	SH6025	*
	2109cc	2.1	91-86	Syncro	KF251-01		9	13/16	24T	*	*	SH6025	*
VOLVO													
C30													
5	2521cc	2.5	13		K70545-01 Š◎		9 7/16	1	20T	*	SH5518	SB60223	*
			12-08		K70545-01 Š◎		9 7/16	1	20T	*	SH5518	SB60223	DMF91186
C70													
5	2319cc	2.3	04-98	(fr. ch. #1053512)	K70255-01 Š◎		9 7/16	7/8	20T	*	SH5414	SB60119	DMF91177
			98	(to ch. #1053511)	K70255-01 Š◎		9 7/16	7/8	20T	*	SH5414	SB60119	*
	2521cc	2.5	10-08	(fr. ch. #50212)	K70545-01 Š◎		9 7/16	1	20T	*	SH5518	SB60223	DMF91186
			08-06	(to ch. #50211)	K70434-01 Š◎		9 7/16	1	23T	*	SH5518	SB60223	DMF91186
P1800													
4	1780cc	1.8	68-62		KF242-01 ◎		8 1/2	1	10T	*	*	*	*
S40													
5	2435cc	2.4	10		K70433-01 Š◎	60	9	1	23T	*	*	SB60221	DMF91177

◎ Kit Only

* Not Available
Ø Components Available
Š Kit Includes Concentric Slave Cylinder
ƒ Kit Includes Flywheel

© 2014 ZF North American Operations, Inc. All Rights Reserved. No portion of this work may be reproduced or copied by any means without the prior approval of ZF North American Operations, Inc.

SACHS

CLUTCH KIT

Cyl.	CC Cubic Inch	Liter	Year	Application Information	Clutch Kit	Notes Pg.180	Disc Size O.D.	Disc Size I.D.	Disc Size Teeth	PreFilled Master Or System	Master Cylinder	Slave Cylinder	Flywheel
VOLVO (Cont'd)													
S40 (Cont'd)													
5	2435cc	2.4	08-04		K70433-01 Š◎	60	9	1	23T	*	*	SB60221	DMF91177
	2521cc	2.5	10		K70600-01 Š◎		9 7/16	1	23T	*	SH5518	SB60223	DMF91186
			07-06	AWD	K70600-01 Š◎		9 7/16	1	23T	*	SH5518	SB60223	*
			06	FWD	K70434-01 Š◎		9 7/16	1	23T	*	SH5518	SB60223	DMF91186
			05-04	Turbo	K70434-01 Š◎		9 7/16	1	23T	*	SH5518	SB60223	DMF91186
S60													
5	2319cc	2.3	04-01		K70255-01 Š◎	60	9 7/16	7/8	20T	*	SH5535	SB60119	DMF91177
	2435cc	2.4	07-05	Turbo	K70546-01 Š◎		9 7/16	7/8	23T	*	SH5534	SB60224	DMF91186
			05-02	Non-Turbo	K70433-02	60	9	1	23T	*	SH5535	SB60119	DMF91177
			01	Non-Turbo	K70275-01 Š◎	60	9	13/16	20T	*	SH5535	SB60119	DMF91177
	2521cc	2.5	07-06		K70401-02 Š◎		9 7/16	1	23T	*	SH5534	SB60224	*
			05-04		K70401-01 Š◎		9 7/16	1	23T	*	SH5534	SB60224	*
S70													
5	2319cc	2.3	00-98	(fr. ch. #460000), flywheel (fr. eng. #1053512), Turbo	K70255-01 Š◎		9 7/16	7/8	20T	*	SH5414	SB60119	*
			98	(to ch. #459999), flywheel (to eng. #1053511), Turbo	K70551-01 ◎		9 7/16	27/32	20T	*	*	SH6438	*
	2435cc	2.4	00-99	Ghent Built (fr. ch. #579063) or Torslanda Built (fr. ch. #578139), Non-Turbo	K70275-01 Š◎	60	9	13/16	20T	*	SH5414	SB60119	DMF91177
			99	Ghent Built (to ch. #579062) or Torslanda Built (fr. ch. #578138), Non-Turbo	K70255-01 Š◎	60	9 7/16	7/8	20T	*	SH5414	SB60119	DMF91177
			98	(fr. ch#460000) Non-Turbo	K70110-02 Š◎		9	27/32	20T	*	SH5414	SB60119	*
				(to ch. #459999) Non-Turbo	K70110-01 ◎		9	27/32	20T	*	*	SH6438	*
V50													
5	2521cc	2.5	10		K70600-01 Š◎		9 7/16	1	23T	*	SH5518	SB60223	DMF91186
			07-06	AWD	K70600-01 Š◎		9 7/16	1	23T	*	SH5518	SB60223	DMF91186
			06	FWD	K70434-01 Š◎		9 7/16	1	23T	*	SH5518	SB60223	DMF91186
			05	Turbo	K70434-01 Š◎		9 7/16	1	23T	*	SH5518	SB60223	DMF91186
V70													
5	2319cc	2.3	04-01		K70255-01 Š◎	60	9 7/16	7/8	20T	*	SH5535	SB60119	DMF91177
			00-98	(fr. ch. #395002), flywheel (fr. eng. #1053512)	K70255-01 Š◎	60	9 7/16	7/8	20T	*	SH5414	SB60119	DMF91177
			98	(to ch. #395001), flywheel (to eng. #1053511)	K70551-01 ◎		9 7/16	27/32	20T	*	*	SH6438	*
	2435cc	2.4	07-05		K70433-02	60	9	1	23T	*	SH5534	SB60119	DMF91177
			04-02		K70433-02	60	9	1	23T	*	SH5535	SB60119	DMF91177
			01		K70275-01 Š◎	60	9	13/16	20T	*	SH5535	SB60119	DMF91177
			00-99	(fr. ch. #555741)	K70275-01 Š◎	60	9	13/16	20T	*	SH5414	SB60119	DMF91177
			99	(to ch. #555740)	K70255-01 Š◎	60	9 7/16	7/8	20T	*	SH5414	SB60119	DMF91177
			98	(fr. ch. #395002)	K70110-02 Š◎		9	27/32	20T	*	SH5414	SB60119	*
				(to ch. #395001)	K70110-01 ◎		9	27/32	20T	*	*	SH6438	*
	2521cc	2.5	07-06		K70401-02 Š◎		9 7/16	1	23T	*	SH5534	SB60224	*

◎ Kit Only

* Not Available
Ø Components Available
Š Kit Includes Concentric Slave Cylinder
ƒ Kit Includes Flywheel

© 2014 ZF North American Operations, Inc. All Rights Reserved. No portion of this work may be reproduced or copied by any means without the prior approval of ZF North American Operations, Inc.

CLUTCH KIT

Cyl.	CC Cubic Inch	Liter	Year	Application Information	Clutch Kit	Notes Pg.180	Disc Size O.D.	Disc Size I.D.	Disc Size Teeth	PreFilled Master Or System	Master Cylinder	Slave Cylinder	Flywheel
VOLVO (Cont'd)													
V70 (Cont'd)													
5	2521cc	2.5	05-04		K70401-01 Š◎		9 7/16	1	23T	*	SH5534	SB60224	*
122													
4	1780cc	1.8	68-62		KF242-01 ◎		8 1/2	1	10T	*	*	*	*
142													
4	1780cc	1.8	68		KF242-01 ◎		8 1/2	1	10T	*	*	*	*
	1990cc	2.0	74-69		KF242-01 ◎		8 1/2	1	10T	*	*	*	*
144													
4	1780cc	1.8	68-67		KF242-01 ◎		8 1/2	1	10T	*	*	*	*
	1990cc	2.0	74-69		KF242-01 ◎		8 1/2	1	10T	*	*	*	*
145													
4	1780cc	1.8	68		KF242-01 ◎		8 1/2	1	10T	*	*	*	*
	1990cc	2.0	74-69		KF242-01 ◎		8 1/2	1	10T	*	*	*	*
240													
4	2316cc	2.3	93-90		K70029-02 ◎		9	1	22T	*	*	*	*
242													
4	2127cc	2.1	84-81	Turbo	KF242-04 ◎		8 1/2	1	22T	*	*	*	*
			78-76		KF242-01 ◎		8 1/2	1	10T	*	*	*	*
244													
4	2127cc	2.1	82-78	(fr. 9/78) Non-Turbo	KF242-04 ◎		8 1/2	1	22T	*	*	*	*
			78-76	(to 8/78) Non-Turbo	KF242-01 ◎		8 1/2	1	10T	*	*	*	*
	2316cc	2.3	89-87		K70029-02 ◎		9	1	22T	*	*	*	*
			86-85		KF242-05 ◎		8 1/2	1	22T	*	*	*	*
6	2383cc	2.4	84-82		K70029-03		9	1	22T	*	*	*	*
245													
4	2127cc	2.1	84-81	Turbo	KF242-04 ◎		8 1/2	1	22T	*	*	*	*
			78-76		KF242-01 ◎		8 1/2	1	10T	*	*	*	*
	2316cc	2.3	89-87		K70029-02 ◎		9	1	22T	*	*	*	*
			86-85		KF242-05 ◎		8 1/2	1	22T	*	*	*	*
6	2383cc	2.4	84-82		K70029-03		9	1	22T	*	*	*	*
262													
6	2849cc	2.8	81-80		*					*	*	SH6396	*
264													
6	2383cc	2.4	81		K70029-03		9	1	22T	*	*	*	*
	2673cc	2.7	79-76		*					*	*	SH6396	*
	2849cc	2.8	82-80		*					*	*	SH6396	*
265													
6	2849cc	2.8	81-80		*					*	*	SH6396	*
740													
4	2316cc	2.3	92-85	B230FT eng.	K70030-01 ◎		9	1	22T	*	SH5475	SH6397	*
			90-89	B234F eng.	K70029-01 ◎		9	1	22T	*	*	*	*
			90-88	B230F eng., M47 trans.	K70029-02 ◎		9	1	22T	*	*	*	*
			90-85	B230F eng., M46 trans.	KF242-05 ◎		8 1/2	1	22T	*	*	*	*
6	2377cc	2.4	86		K70029-04		9	1	22T	*	*	*	*
760													
4	2316cc	2.3	86-84		K70030-01 ◎		9	1	22T	*	SH5475	SH6397	*

◎ Kit Only

* Not Available
Ø Components Available
Š Kit Includes Concentric Slave Cylinder
ƒ Kit Includes Flywheel

© 2014 ZF North American Operations, Inc. All Rights Reserved. No portion of this work may be reproduced or copied by any means without the prior approval of ZF North American Operations, Inc.

SACHS

CLUTCH KIT

Cyl.	CC Cubic Inch	Liter	Year	Application Information	Clutch Kit	Notes Pg.180	Disc Size O.D.	Disc Size I.D.	Disc Size Teeth	PreFilled Master Or System	Master Cylinder	Slave Cylinder	Flywheel
VOLVO (Cont'd)													
760 (Cont'd)													
6	2383cc	2.4	85-84	(fr. 9/84)	K70029-03		9	1	22T	*	*	*	*
			84-83	(to 8/84)	K70029-04		9	1	22T	*	*	*	*
	2849cc	2.8	86-83		*					*	SH5475	SH6396	*
850													
5	2319cc	2.3	97-95	Turbo	K70551-01 ◎		9 7/16	27/32	20T	*	SH5414	SH6438	*
	2435cc	2.4	97-93	Non-Turbo	K70110-01 ◎		9	27/32	20T	*	*	SH6438	*
940													
4	2316cc	2.3	93-91	B230FT eng.	K70029-02 ◎		9	1	22T	*	*	SH6397	*
1800													
4	1990cc	2.0	73-69		KF242-01 ◎		8 1/2	1	10T	*	*	*	*
VOLVO TRUCK													
FE SERIES													
6	439"	7.2	06-97	cat 6331 Eng., 14" pull type, ceramic button	K70323-01 ◎		14	1 3/4	10T	*	*	*	*

◎ Kit Only

* Not Available
Ø Components Available
Š Kit Includes Concentric Slave Cylinder
ƒ Kit Includes Flywheel

© 2014 ZF North American Operations, Inc. All Rights Reserved. No portion of this work may be reproduced or copied by any means without the prior approval of ZF North American Operations, Inc.

CLUTCH FORKS

Cyl	Liter	Year	Description	Clutch Fork
BUICK				
SKYHAWK				
4	1.8	84-82	4 Spd.	SF1008
	2.0	87-83	4 Spd.	SF1008
SKYLARK				
4	2.5	85-80	FWD	SF1008
6	2.8	85-80		SF1008
	3.8	78-75		SF1001
8	5.7	79-75	26 Tooth Disc	SF1001
	ALL	79-75	10 Tooth Disc	SF1001
CADILLAC				
CIMMARON				
4	1.8	82	4 Spd.	SF1008
	2.0	86-83	4 Spd.	SF1008
6	2.8	87-85	4 Spd.	SF1008
CHEVROLET				
CAMARO				
6	2.8	89-84	5 Spd.	SF1021
		84	4 Spd.	SF1021
	3.8	81-80		SF1001
	4.1	79-73		SF1001
8	ALL	81-73	10 Tooth Disc, Exc. 262	SF1001
			26 Tooth Disc, Exc. 262	SF1001
CAVALIER				
4	1.8	82		SF1008
	2.0	87-83	4 Spd.	SF1008
6	2.8	87	4 Spd.	SF1008
		86-85		SF1008
CELEBRITY				
4	2.5	86-84		SF1008
CHEVELLE				
6	4.1	73		SF1001
8	ALL	73		SF1001
CITATION				
4	2.5	85-80		SF1008
6	2.8	85-80		SF1008
IMPALA				
6	4.1	73		SF1001
MALIBU				
6	3.3	79-78		SF1001
	3.8	79-78		SF1001
	4.1	77-73		SF1001
8	ALL	79-73		SF1001

Cyl	Liter	Year	Description	Clutch Fork
CHEVROLET (Cont'd)				
MONTE CARLO, EL CAMINO				
8	5.7	75-73		SF1001
	ALL	77-76	Exc. 262	SF1001
NOVA				
6	4.1	79-73		SF1001
SPECTRUM				
4	1.5	88-85	Exc. Turbo	SF1000
CHEVROLET LIGHT TRUCK				
BLAZER				
6	4.1	82-73	w/o Prop Shaft Brake	SF1001
	4.3	95	MG5	SF1000
	4.8	73	w/o Prop Shaft Brake	SF1001
8	6.2	91-85	Diesel	SF1013
		84-82	Diesel	SF1001
	6.5	94	Diesel, incl. Turbo	SF1000
	ALL	94-92	MG5	SF1000
		91-85		SF1013
		84-73	w/o Prop Shaft Brake	SF1001
PICKUP				
6	ALL	95-88	MG5	SF1000
		94-88	MT8	SF1000
		91-88	M20	SF1000
		87-85		SF1013
		84-73	w/o Prop Shaft Brake	SF1001
8	6.2	93-90	Diesel	SF1000
		87-85	Diesel	SF1013
		84-82	Diesel	SF1001
	6.5	94-93	Diesel, incl. Turbo (Exc. 95-93 P30)	SF1000
	ALL	95	MW3	SF1000
		94-88	MG5	SF1000
		91-88	M20	SF1000
		87-85		SF1013
		84-73	w/o Prop Shaft Brake	SF1001
S10 BLAZER				
6	4.3	94-91	Getrag Trans., MY2	SF1000
S10 PICKUP				
6	2.8	93-90	Getrag Trans., MY2	SF1000
	4.3	93-91	Getrag Trans., MY2	SF1000
G SERIES VAN				
6	ALL	89-79		SF1001
8	ALL	89-79		SF1001

© 2014 ZF North American Operations, Inc. All Rights Reserved. No portion of this work may be reproduced or copied by any means without the prior approval of ZF North American Operations, Inc.

SACHS

CLUTCH FORKS

Cyl	Liter	Year	Description	Clutch Fork
CHEVROLET MEDIUM TRUCK				
C50, C60, C70				
8	5.7	95-91		SF1041
		90-73	13” Clutch	SF1045
	6.0	95-91		SF1041
		90-73	13” Clutch	SF1045
DODGE LIGHT TRUCK				
PICKUP, RAMCHARGER, VAN				
6	3.7	86-81		SF1016
8	5.2	87-81		SF1016
	5.9	87-81		SF1016
VAN				
ALL	ALL	86-81		SF1016
GMC TRUCK				
5000, 6000, 7000				
8	5.7	86-79	C50	SF1001
		78-70	w/o prop shaft brake	SF1001
JIMMY				
6	4.1	82-73	w/o Prop Shaft Brake	SF1001
	4.3	95		SF1000
8	6.2	91-85	Diesel	SF1013
		84-82	Diesel	SF1001
	ALL	91-85		SF1013
		84-73	w/o Prop Shaft Brake	SF1001
PICKUP				
6	ALL	95-88	MG5	SF1000
		94-88	MT8	SF1000
		91-88	M20	SF1000
		87-85		SF1013
		84-73	w/o Prop Shaft Brake	SF1001
8	6.2	93-90	Diesel	SF1000
		87-85	Diesel	SF1013
		84-82	Diesel	SF1001
	6.5	94-93	Diesel, incl. Turbo (Exc. 95-93 P30)	SF1000
	ALL	95	MW3	SF1000
		94-88	MG5	SF1000
		91-88	M20	SF1000
		87-85		SF1013
		84-73	w/o Prop Shaft Brake	SF1001
S15 JIMMY				
6	4.3	93-91	Getrag Trans., MY2	SF1000
S15 PICKUP				
6	2.8	90	Getrag Trans.	SF1000
	4.0	90	Getrag Trans.	SF1000

Cyl	Liter	Year	Description	Clutch Fork
GMC TRUCK (Cont’d)				
SONOMA				
6	4.3	95-94	MY2	SF1000
SPRINT				
6	4.1	77-75		SF1001
8	ALL	77-73	Exc. 454	SF1001
VAN				
ALL	ALL	89-79		SF1001
YUKON				
8	5.7	94		SF1000
	6.5	94		SF1000
JEEP				
CJ				
4	2.5	80	(to #040992) CJ-5	SF1012
			(to #041925) CJ-7	SF1012
6	3.8	78-76		SF1012
	4.2	80-76	(to #JOM93AC041925)	SF1012
8	5.0	79-76		SF1012
OLDSMOBILE				
CUTLASS				
8	4.3	77-76		SF1001
FIRENZA				
4	1.8	86-82		SF1008
	2.0	87-83		SF1008
6	2.8	87-85		SF1008
OMEGA				
4	2.5	84-80		SF1008
6	2.8	84-80		SF1008
8	4.3	77-75		SF1001
PLYMOUTH TRUCK				
PICKUP				
6	3.7	86-81		SF1016
		83-81	10 Tooth Disc	SF1016
8	5.2	87-81		SF1016
	5.9	87-81		SF1016
	ALL	87		SF1016
PONTIAC				
FIERO				
4	2.5	84		SF1008
6	2.8	87-85	4 Spd.	SF1008
FIREBIRD				
6	2.8	89-84	5 Spd.	SF1021

© 2014 ZF North American Operations, Inc. All Rights Reserved. No portion of this work may be reproduced or copied by any means without the prior approval of ZF North American Operations, Inc.

CLUTCH FORKS

Cyl	Liter	Year	Description	Clutch Fork
PONTIAC (Cont'd)				
FIREBIRD (Cont'd)				
6	3.8	81-77		SF1001
	4.1	76-73		SF1001
8	ALL	81-73	10 Tooth Disc	SF1001
		81-73	26 Tooth Disc	SF1001
GRAND PRIX				
8	7.5	76-73	3 & 4 Spd.	SF1001
LE MANS, TEMPEST, T37				
6	4.1	77-76		SF1001
8	ALL	77-76	3 Spd., 10 Tooth Disc	SF1001
			4 Spd., 26 Tooth Disc	SF1001
PHOENIX				
4	2.5	84-80		SF1008
		81-78	RWD	SF1001

Cyl	Liter	Year	Description	Clutch Fork
PONTIAC (Cont'd)				
PHOENIX (Cont'd)				
6	2.8	84-80		SF1008
	3.8	79-77	RWD	SF1001
SUNBIRD				
4	1.8	87-86	4 Spd.	SF1008
		86-82		SF1008
	2.0	87-86	4 Spd.	SF1008
		86-82	Exc. Turbo	SF1008
VENTURA				
6	4.1	76		SF1001
8	ALL	77-76	10 Tooth Disc	SF1001
			26 Tooth Disc	SF1001

© 2014 ZF North American Operations, Inc. All Rights Reserved. No portion of this work may be reproduced or copied by any means without the prior approval of ZF North American Operations, Inc.

SACHS

INDUSTRIAL SECTION

Cyl	CC	Liter	Year	Application Information	Cover Size	Cover	Disc Size O.D.	Disc Size Teeth	Driven Disc	Clutch Releaser
ALLIS-CHALMERS INDUSTRIAL TRUCKS (Buda)										
4	ALL	ALL	83-60	AC-C35-40-45-50-55, F-P-40-50, F30-24, FT, FTP30-24, FT40-18, F, FP, FT, FTP40-24, F, FP, FT FTB50-24 w/G-153 & D-175 Eng. Std. 25 Spd.; FDX-30-40-50, FPDX-40-50 w/ D175 Eng. Std. 2 Spd.	11"	*	11	10	BBD1972	*
6	ALL	ALL	83-69	AC-C/PFSD 60/70/80-6,000-8,000 lbs., AC-C-60/70/100C-C, 000-10,000 lbs., F100/120-10,000-12,000 lbs. w/ G230 & D262 Eng. Std. 2 Spd. (Wet Type Application)	12"	*	12	10	BBD3551	*
AMERICAN HOIST & DERRICK CO. (Formerly Bros, Inc.)										
	ALL	ALL	61-56	SP54B Roller	11"	*	11	10	BBD1972	*
AVAILABLE TRUCK										
	ALL	ALL	48	CS200SP, C225SP, 1 1/2 Ton	11"	*	11	10	BBD1972	*
BAKER INDUSTRIAL TRUCK (Otis Elevator)										
	ALL	ALL	70-69	Wet Type Application	12"	*	12	10	BBD3551	*
BLUE BIRD BUS (Also See Ford)										
	ALL	ALL	64-63	334	13"	*	13	10	BBD2876	*
BROOKVILLE LOCOMOTIVE										
	ALL	ALL	45	Locomotive	11"	*	11	10	BBD1972	*
BUDA (Allis-Chalmers)										
	ALL	ALL	59-52	FT30, FT40-18, FTD40, 18 Ford Lift Truck	11"	*	11	10	BBD1972	*
			59-51	HA120 Tow Truck	11"	*	11	10	BBD1972	*
			58-52	FT40-24, FTD40-24 Ford Lift Truck	11"	*	11	10	BBD1972	*
			55-53	Earth Drill YI	11"	*	11	10	BBD1972	*
			53-51	J233 Tow Truck	11"	*	11	10	BBD1972	*
			52-42	Rail Car	11"	*	11	10	BBD1972	*
CANEMASTER (J&L Engineering)										
	ALL	ALL	70-60	Harbester S1000, SP6000, 4910, 4911	11"	*	11	10	BBD1972	*
CHAIN BELT MIXER										
	ALL	ALL	70-57	Concrete Finisher FA, PW	11"	*	11	10	*	*
CHARLES MACHINE WORKS										
4	ALL	ALL	83-68	Trencher V4610 Eng., R-40 Trencher V46D Eng., R65 Trencher V46S Eng.	11"	*	11	10	BBD1972	*
CHEVROLET TRUCK & BUS - MEDIUM & HEAVY DUTY (Gas Series 35-95)										
6	ALL	ALL	57-54	Series 40-60 (Flat Diaph.)	11"	*	11	10	*	SN1086SA
				Series 40-60, A5 (12" HD w/ Lever Type Cover)	12"	*	12	10	BBD4024	SN1488
				Optional HD Cover	12"	BBC1862				
				Optional HD w/ Diaph. Cover	12"	BBC1909				
	194"	3.2	67-66		10 1/2"	BBC1873	10	10	BBD3425	*
				Optional HD 11" Units	11"	*	11	10	BBD3348	
			65-64	Flat Diaph.	10 1/2"	BBC1873	10	10	*	SN1086SA
	230"	3.8	70-63	Flat Diaph.	11"	*	11	10	BBD3348	SN1086SA
				Optional HD 12" Cover	12"	*	12	10	BBD4024	SN1488

© 2014 ZF North American Operations, Inc. All Rights Reserved. No portion of this work may be reproduced or copied by any means without the prior approval of ZF North American Operations, Inc.

INDUSTRIAL SECTION

Cyl	CC	Liter	Year	Application Information	Cover Size	Cover	Disc Size O.D.	Disc Size Teeth	Driven Disc	Clutch Releaser
CHEVROLET TRUCK & BUS - MEDIUM & HEAVY DUTY (Gas Series 35-95) (Cont'd)										
6	230"	3.8	70-63	*Optional HD 12" w/ Diaph. Cover*	12"	BBC1909				
	235"	3.8	62	Flat Diaph.	11"	*	11	10	*	SN1086SA
	250"	4.1	79-65	Flat Diaph.	10 1/2"	BBC1873	10	10	BBD3425	SN1086SA
				Optional 11" Units	11"	*	11	10	BBD3348	SN1086SA
	292"	4.8	89-63	Lever Type	12"	*	12	10	BBD4024	SN1488
				Optional HD Cover	12"	BBC1862				
				Optional HD w/ Diaph. Cover	12"	BBC1909				
			74-69	Bent Diaph.	11"	BBC1877	11	10	BBD3348	SN1488
	305	5.0	70-60		12"	*	11	10	*	SN1488
				Optional HD Cover	12"	BBC1862				
				Optional HD w/ Diaph. Cover	12"	BBC1909				
8	ALL	ALL	61-56	Series 70-80	13"	*	13	10	BBD2876	SN1456
				Optional HD Metalic Button Disc	13"	*	13	10	BBD4182CB	SN1456
	327"	5.4	70-62		13"	*	13	10	BBD2876	SN1456
				Optional HD Metalic Button Disc	13"	*	13	10	BBD4182CB	SN1456
	348"	5.7	70-62		13"	*	13	10	BBD2876	SN1456
				Optional HD Metalic Button Disc	13"	*	13	10	BBD4182CB	SN1456
	350"	5.7	90-65		13"	*	13	10	BBD2876	SN1456
				Optional Diaph. Cover	13"	BBC1919				
				Optional HD Metalic Button Disc	13"	*	13	10	BBD4182CB	SN1456
	350"	5.7	89-69		12"	BBC1862	12	10	BBD2876	SN1488
				Optional Diaph. Cover	12"	BBC1909				
	366"	6.0	84-65		13"	*	13	10	BBD2876	SN1456
				Optional HD Metalic Button Disc	13"	*	13	10	BBD4182CB	SN1456
	409"	6.7	78-63	Two Plate, Complete Matched Set	12"	*	12	10	*	SN1171
			70-62		13"	*	13	10	BBD2876	SN1456
				Optional HD Metalic Button Disc	13"	*	13	10	BBD4182CB	SN1456
	427"	7.0	78-63	Two Plate, Complete Matched Set	12"	*	12	10	*	SN1171
CHEVROLET TRUCK & BUS - MEDIUM & HEAVY DUTY (Diesel Series 30-90)										
4	212"	3.5	67-63	Detroit Diesel, 4-53N	13"	*	13	10	BBD2876	*
				Detroit Diesel, 4-53N, HD Metalic Button	13"	*	13	10	BBD4182CB	*
CHRYSLER INDUSTRIAL - ENGINE										
	ALL	ALL	55-54	23A, 24A, 34, 35, 36, 37	13"	*	13	10	BBD2876	*
			51-49	13A, 14A	13"	*	13	10	BBD2876	*
6	170"	2.8	76-59	30, 32, 53, 54, 56A, 38K (HD Cover)	12"	BBC1862	11	10	*	*
				Optional HD w/ Diaph. Cover	12"	BBC1909				
	225"	3.7	76-59	30, 32, 53, 54, 56A, 38K (HD Cover)	12"	BBC1862	11	10	*	*
				Optional HD w/ Diaph. Cover	12"	BBC1909				
8	318"	5.2	76-59	HD Cover	12"	BBC1862	11	10	*	*
				Optional HD w/ Diaph. Cover	12"	BBC1909				
			71-65	6-47, "L"	12"	BBC1575	11 3/4	10	*	*

© 2014 ZF North American Operations, Inc. All Rights Reserved. No portion of this work may be reproduced or copied by any means without the prior approval of ZF North American Operations, Inc.

INDUSTRIAL SECTION

Cyl	CC	Liter	Year	Application Information	Cover Size	Cover	Disc Size O.D.	Disc Size Teeth	Driven Disc	Clutch Releaser
CHRYSLER INDUSTRIAL - ENGINE (Cont'd)										
8	361"	5.9	71-65	6-21, HT361"	13"	*	13	10	BBD2876	*
				6-27, "L"	13"	*	13	10	BBD2876	*
	413"	6.8	71-65	6-21	13"	*	13	10	BBD2876	*
				6-27, "L"	13"	*	13	10	BBD2876	*
DIAMOND-REO TRUCK										
8	350"	5.7	70-68	Chevrolet Eng., Gas	13"	*	13	10	BBD2876	SN1456
				Chevrolet Eng., Gas (HD Metalic Button)	13"	*	13	10	BBD4182CB	SN1456
	366"	6.0	70-68	Chevrolet Eng., Gas	13"	*	13	10	BBD2876	SN1456
				Chevrolet Eng., Gas (HD Metalic Button)	13"	*	13	10	BBD4182CB	SN1456
DIAMOND T (Also See Diamond Reo)										
	ALL	ALL	56-50	1 1/2-2 1/2 Ton 322, 323, 323C, 404SC (Rigid Type)	11"	*	11	10	BBD1972	*
			54-50	1 1/2-4 Ton 420, 422, 422C, 520 (Rigid Type)	11"	*	11	10	BBD1972	*
			50-47	1-2 1/2 Ton 404, 404SC	11"	*	11	10	BBD1972	*
DIVCO (Hughes-Keenan, Trans-Airco)										
	ALL	ALL	60-52	V10 Crane	11"	SC0162	11	10	SD0607	*
6	240"	3.9	71-65	Ford Eng.	11"	SC0162	11	10	SD0607	*
DODGE TRUCK & BUS - MEDIUM & HEAVY DUTY (Gas 1 1/2-5 Ton Series 400-1000)										
6	225"	3.7	77-74		12"	BBC1575	11 3/4	10	*	*
8	318"	5.2	73-57		12"	BBC1575	11 3/4	10	*	*
	361"	5.9	71-57		13"	*	13	10	BBD2876	*
				Optional HD Metalic Button Disc	13"	*	13	10	BBD4182CB	*
DODGE TRUCK & BUS - MEDIUM & HEAVY DUTY (Diesel)										
	ALL	ALL	66-63	Perkins 354D Eng.	12"	BBC1575	11 3/4	10	*	*
ERICKSON										
	ALL	ALL	78-58	Power Kart PK6, PK10, PK14, PK20, PK30	11"	*	11	10	BBD1972	*
			78-54	Fork Lift PB5 2 1/2, F5R, F6R, F8R, F2W, F3W, F4W	11"	*	11	10	BBD1972	*
				Platform Trucks PB1 5 Ton, PB2 10 Ton, P5, P5A, P6A, P7, P7A, P8A, PK10, PK12A	11"	*	11	10	BBD1972	*
			65-59	Kart All Scissors Lift KA4, KS64	11"	*	11	10	BBD1972	*
			65-56	Platform Fork PF7A, PF10	11"	*	11	10	BBD1972	*
FEDERAL TRUCK										
	ALL	ALL	56-50	1500T, U, 1501T, 1600T, 1601T, U, 1602T, U, 1800T, 1801T, U, 1802T, U-1 1/2-2 Ton (Rigid Plate Option)	11"	*	11	10	BBD1972	*
			50-48	18M, 18M2, 2 Ton	11"	*	11	10	BBD1972	*
			47	18Q, 18Q2, 25M, 25M, 2-2 1/2 Ton	11"	*	11	10	BBD1972	*
FLXIBLE										
6	ALL	ALL	81-70	Diesel, Bus Model III-CC Ton , w/ AC Eng.	9 1/8"	SC1042	9 1/8	10	*	*
8	ALL	ALL	81-70	Diesel, Bus Model III-CC Ton , w/ AC Eng.	9 1/8"	SC1042	9 1/8	10	*	*

© 2014 ZF North American Operations, Inc. All Rights Reserved. No portion of this work may be reproduced or copied by any means without the prior approval of ZF North American Operations, Inc.

INDUSTRIAL SECTION

Cyl	CC	Liter	Year	Application Information	Cover Size	Cover	Disc Size O.D.	Disc Size Teeth	Driven Disc	Clutch Releaser
GMC PARLOR COACH (Rear Engine Intercity Type)										
6	ALL	ALL	79-69	Bus D51, w/ AC Eng. (Flat Diaph.)	9 1/8"	SC1042	9 1/8	10	*	*
GMC TRUCK & BUS - MEDIUM & HEAVY DUTY (Gas Series 3500-9500)										
6	ALL	ALL	57-54	Series 4000-6000 (Flat Diaph.)	11"	*	11	10	*	SN1086SA
				Optional 12" Units	12"	*	12	10	BBD4024	SN1488
				Optional HD 12" Cover	12"	BBC1862				
				Optional HD 12" w/ Diaph. Cover	12"	BBC1909				
	194"	3.2	67-66	Flat Diaph.	10 1/2"	BBC1873	10	10	BBD3425	SN1086SA
				Optional HD 11" Units	11"	*	11	10	BBD3348	SN1086SA
			65-64	Flat Diaph.	10 1/2"	BBC1873	10	10	BBD3425	SN1086SA
	230"	3.8	70-63	Flat Diaph.	11"	*	11	10	BBD3348	SN1086SA
				Optional 12" Units	12"	*	12	10	BBD4024	SN1488
				Optional HD 12" Cover	12"	BBC1862				
				Optional HD 12" w/ Diaph. Cover	12"	BBC1909				
	235"	3.8	62	Flat Diaph.	11"	*	11	10	*	SN1086SA
	250"	4.1	79-65	Flat Diaph.	10 1/2"	BBC1873	10	10	BBD3425	SN1086SA
				Optional HD 11" Units	11"	*	11	10	BBD3348	SN1086SA
	292"	4.8	89-63	Lever Type	12"	*	12	10	BBD4024	SN1488
				Optional HD Cover	12"	BBC1862				
				Optional HD w/ Diaph. Cover	12"	BBC1909				
			74-69	Bent Diaph.	11"	BBC1877	11	10	BBD3348	SN1488
	305"	5.0	70-60		12"	*	11	10	*	SN1488
				Optional HD Cover	12"	BBC1862				
				Optional HD w/ Diaph. Cover	12"	BBC1909				
8	ALL	ALL	61-56	Series 7000-8000-9000	13"	*	13	10	BBD2876	SN1456
				Optional HD Metalic Button Disc	13"	*	13	10	BBD4182CB	SN1456
	327"	5.4	70-62		13"	*	13	10	BBD2876	SN1456
				Optional HD Metalic Button Disc	13"	*	13	10	BBD4182CB	SN1456
	348"	5.7	70-62		13"	*	13	10	BBD2876	SN1456
				Optional HD Metalic Button Disc	13"	*	13	10	BBD4182CB	SN1456
	350"	5.7	90-65		13"	*	13	10	BBD2876	SN1456
				Optional Diaph. Cover	13"	BBC1919				
				Optional HD Metalic Button Disc	13"	*	13	10	BBD4182CB	SN1456
			89-65		12"	BBC1862	12	10	BBD4024	SN1488
				Optional Diaph. Cover	12"	BBC1909				
	366"	6.0	84-65	*Optional HD Metalic Button Disc*	13"	*	13	10	BBD4182CB	SN1456
			65-64		13"	*	13	10	BBD2876	SN1456
	409"	6.7	78-63	Two Plate, Complete Matched Set	12"	*	12	10	*	SN1171
			70-62		13"	*	13	10	BBD2876	SN1456
				Optional HD Metalic Button Disc	13"	*	13	10	BBD4182CB	SN1456
	427"	7.0	78-63	Two Plate, Complete Matched Set	12"	*	12	10	*	SN1171

© 2014 ZF North American Operations, Inc. All Rights Reserved. No portion of this work may be reproduced or copied by any means without the prior approval of ZF North American Operations, Inc.

INDUSTRIAL SECTION

Cyl	CC	Liter	Year	Application Information	Cover Size	Cover	Disc Size O.D.	Disc Size Teeth	Driven Disc	Clutch Releaser
GMC TRUCK & BUS - MEDIUM & HEAVY DUTY (Diesel Series 3500-9500) (Cont'd)										
4	212"	3.5	67-63	Detriot Diesel 4-53N	13"	*	13	10	BBD2876	*
				Detriot Diesel 4-53N, HD Metalic Button	13"	*	13	10	BBD4182CB	*
GUNNISON (Seaman-Gunnison)										
	ALL	ALL	58-49	Asphalt Distributor	11"	*	11	10	BBD1972	*
HALLIBURTON (P-H)										
	ALL	ALL	57-50	Rail Car Spotter	11"	*	11	10	BBD1972	*
HARNISCHFEGER										
	ALL	ALL	69-62	105B, 155B, 210, 255B, 325 Excavator, Truck Crane	11"	*	11	10	BBD1972	*
			65-54	55, 105, 155, 155A Excavator	11"	*	11	10	BBD1972	*
HARRIS HARVESTER (Formerly Harvester Implements)										
	ALL	ALL	52-51	30-38LL, 30-38SL, Combine	11"	*	11	10	BBD1972	*
HAYWARD										
	ALL	ALL	55-50	Alfalfa Harvester	11"	*	11	10	BBD1972	*
HIGHWAY TRAILER										
	ALL	ALL	71-63	Earth Drill, B, C, D, H, M, S	11"	*	11	10	BBD1972	*
HOUGH DIVISION - I.H.C. (Formerly Frank G. Hough)										
	ALL	ALL	51-44	HA Payloader Shovel (1/2 Ton)	11"	*	11	10	BBD1972	*
HYSTER										
	ALL	ALL	82-63	Lift Truck S30B, S40B, S50B	11"	*	11	10	BBD1972	*
			65-60	HC, HD, KE, UC, YC	11"	*	11	10	BBD1972	*
			65-53	UC30, UC30D, YC40, YC40D, HC50, HC50D	11"	*	11	10	BBD1972	*
			65-43	Karry Krane KC, KD, Warner Trans.	11"	*	11	10	BBD1972	*
JACKSON										
	ALL	ALL	57-49	Rail Car Tamper	11"	*	11	10	BBD1972	*
JAEGER										
	ALL	ALL	63-58	LP12 Loader, 9G, 9F, 10F, 10FT Mixer	11"	*	11	10	BBD1972	*
			63-54	LP12 Loader, 8F, 9F	11"	*	11	10	BBD1972	*
LOVE TRACTOR (Also See Ford)										
	ALL	ALL	56-51	F51	11"	*	11	10	SD0607	*
MACK TRUCK & BUS										
	ALL	ALL	50-46	EE, EEU	11"	*	11	10	BBD1972	*
MARMON-HERRINGTON										
	ALL	ALL	56-36	Ford Conversion	11"	SC0162	11	10	SD0607	*
MASSY-FERGUSON (Formerly Massey-Harris)										
	ALL	ALL		44, 44D, 44K, 44LP, 44DSL, 444 (Rigid Plate)	11"	*	11	10	BBD1972	*
			46-38	101 Sr., 102 Sr., 202, 203, 203G, 101LG (Rigid Plate)	11"	*	11	10	BBD1972	*
MERCURY TRACTOR (Pettibone-Mulliken)										
	ALL	ALL	53-50	Husky (Ind.) A452-60, (Mil) A452-54	11"	*	11	10	BBD1972	*
			49-47	Husky (Ind.) A452-25-29-30-31, Super Husky (Airport) A452-32	11"	*	11	10	BBD1972	*

© 2014 ZF North American Operations, Inc. All Rights Reserved. No portion of this work may be reproduced or copied by any means without the prior approval of ZF North American Operations, Inc.

INDUSTRIAL SECTION

Cyl	CC	Liter	Year	Application Information	Cover Size	Cover	Disc Size O.D.	Disc Size Teeth	Driven Disc	Clutch Releaser
PETTIBONE-MERCURY										
4	ALL	ALL	78-69	Fork Lift Truck Models 30, 40, 50, GS, GS30H, 40, 50 w/ Cont. F163	11"	*	11	10	BBD1972	*
PETTIBONE-MICHIGAN										
4	ALL	ALL	78-72	Fork Lift Truck Super 4 (2 Ton) w/ Cont. F163	11"	*	11	10	BBD1972	*
			78-69	Diesel, Log Skidder, Master 5 (2 Ton), Cary-Lift, Super 6 (3 Ton) w/ 220	11"	*	11	10	BBD1972	*
ROSS CARRIER										
	ALL	ALL	42-39	Lift Trucks 16HT, 18HT (Ford Conv.)	11"	SC0162	11	10	SD0607	*
SILENT HOIST										
	ALL	ALL	65-58	AX, AY Krane Kar, FK3, FK5 Lift Truck	11"	*	11	10	BBD1972	*
			57-52	A, AX, Karry Kar w/ Hercules Eng.; CD Crane	11"	*	11	10	BBD1972	*
			53-47	A (2 1/2 Ton), AX, CK (5 Ton), AC+V, DY (10 Ton) w/ Hercules Eng.	11"	*	11	10	BBD1972	*
			44-36	Crane A (3 Ton), Crane AX, ADX (5 Ton)	11"	*	11	10	BBD1972	*
SKAGIT										
	ALL	ALL	55-50	BU15 Hoist	11"	*	11	10	BBD1972	*
			49-47	BU15, B20, B30 Yarder	11"	*	11	10	BBD1972	*
SMITH										
	ALL	ALL	60-58	5, 6, 6 1/2 & 7 Yd. Mixer	11"	*	11	10	BBD1972	*
STUDEBAKER TRUCK (1/2 - 1 Ton Light Truck)										
6	ALL	ALL	64-60	Gas Eng., A5	10"	BBC1525	10	10	*	*
STUDEBAKER STUDEBAKER TRUCK (1 1/2 - 3 Ton)										
	ALL	ALL	62-57	*Optional Diaph. Cover*	10 1/2"	BBC1675HD				
SUPERIOR COACH										
	ALL	ALL	49-45	27-31 Pass. w/ Chrysler Eng.	13"	*	13	10	BBD2876	*
TRANSITIER										
	ALL	ALL	61-54	55 Hi Duty 400	11"	*	11	10	BBD1972	*
TROJAN (Yale & Towne)										
	ALL	ALL	57-51	LA40 Loader	11"	*	11	10	BBD1972	*
WARD LA FRANCE TRUCK										
	ALL	ALL	56-55	MB5 Crash Truck	13"	*	13	10	BBD2876	*
WHITE FARM EQUIPMENT (Formerly Minneapolis-Moline)										
	ALL	ALL	69-66	1750 (C.B.)	12"	BBC1575	12	27	*	*
			69-64	1650 (C.B.)	12"	BBC1575	12	19	*	*
			66	1650	12"	BBC1575	11 7/8	10	*	*

© 2014 ZF North American Operations, Inc. All Rights Reserved. No portion of this work may be reproduced or copied by any means without the prior approval of ZF North American Operations, Inc.

SACHS

CLUTCH KITS

PART #	MAKE	O.D.	I.D.	TEETH
K0016-01	FORD	9	1 1/16	10T
K0028-03	VOLKSWAGEN	8	13/16	24T
K0028-07	VOLKSWAGEN	7 7/8	13/16	24T
K0030-02	FORD TRUCK	10	1 1/16	10T
K0030-03	FORD TRUCK	10	1 1/16	10T
K0030-04	FORD	10	1 1/16	10T
K0030-05	FORD TRUCK	10	1 1/16	10T
K0033-01	FORD TRUCK	11	1 1/16	10T
K0033-02	FORD TRUCK	11	1 1/16	10T
K0034-01	BUICK	8 1/2	1	14T
K0034-02	BUICK	8 1/2	1	14T
K0034-03	PONTIAC	8	1	14T
K0036-03	FORD	8 1/2	7/8	20T
K0038-01	RENAULT	7 1/8	13/16	26T
K0038-02	RENAULT	7 1/8	11/16	20T
K0043-01	CHEVROLET	6 1/4	3/4	18T
K0044-01	CHEVROLET	7 1/4	1	14T
K0047-04	FORD TRUCK	8 7/8	1	23T
K0047-05	FORD TRUCK	8 7/8	1	23T
K0047-06	FORD TRUCK	8 7/8	1	23T
K0047-07	FORD TRUCK	8 7/8	1	23T
K0048-01	FORD	10 1/2	1 1/16	10T
K0050-02	DODGE	8 1/2	15/16	17T
K0050-03	CHRYSLER	8 1/2	13/16	18T
K0058-01	FORD TRUCK	12	1 1/4	10T
K0058-01HD	FORD TRUCK	12	1 1/4	10T
K0059-01	CHEVROLET	9 1/8	1	14T
K0059-03	CHEVROLET	9 1/8	1	14T
K0061-03	DODGE TRUCK	9 1/8	1	23T
K0064-01	FORD TRUCK	11	1 1/16	10T
K0064-04	FORD TRUCK	11	1 1/16	10T
K0064-05	FORD TRUCK	11	1 1/16	10T
K0064-05CB	FORD TRUCK	11	1 1/16	10T
K0066-03	CHRYSLER	9 1/8	15/16	17T
K0066-07	CHRYSLER	9	13/16	18T
K0071-01	FORD	7 1/8	3/4	18T
K0072-02	MERKUR	9	1	23T
K0072-03	FORD	9	1 1/16	10T
K0073-01	PONTIAC	7 7/8	3/4	14T
K0074-01	CHEVROLET	8 1/2	1	14T
K0076-01	CHEVROLET	7 7/8	15/16	21T
K0076-05	TOYOTA	7 7/8	15/16	21T

PART #	MAKE	O.D.	I.D.	TEETH
K0076-06	TOYOTA	7 7/8	15/16	21T
K0076-08	TOYOTA	7 7/8	15/16	21T
K0077-01	CHEVROLET	7 1/2	3/4	18T
K0077-02	CHEVROLET	7 1/2	3/4	18T
K0107-01	DODGE	8 1/2	7/8	20T
K0107-03	SUZUKI	8 1/2	7/8	20T
K0107-04	CHEVROLET TRUCK	8 1/2	7/8	20T
K0108-02	CHEVROLET	6 3/4	3/4	18T
K0110-01	GEO	7 7/8	1	14T
K0111-01	PONTIAC	7 7/8	3/4	24T
K0112-01	PONTIAC	8 1/2	3/4	24T
K0115-01	SATURN	8 1/2	15/16	22T
K0116-01	FORD TRUCK	10	1	23T
K0116-02	FORD TRUCK	10	1	23T
K0120-01	DODGE TRUCK	10 3/8	1	23T
K0122-01	FORD	9 3/4	7/8	20T
K0162-01	FORD TRUCK	11	1 3/8	10T
K0162-02	FORD MED. TRUCK	11	1 3/8	10T
K0162-03	FORD MED. TRUCK	11	1 3/8	10T
K0315-01	FORD	8 1/2	1	23T
K0315-02	FORD	8 1/2	1	23T
K0315-03	MERCURY	8 1/2	1	23T
K0315-04	FORD	8 1/2	1 1/16	10T
K0386-02	FORD MED. TRUCK	13	1 3/8	10T
K0386-02CB	FORD MED. TRUCK	13	1 3/8	10T
K0386-02KL	FORD MED. TRUCK	13	1 3/8	10T
K0465-01	FORD	11	1 1/16	10T
K0465-02	FORD	11	1 1/16	10T
K0503-01	INTERNATIONAL	13	1 1/4	10T
K0504-01	INTERNATIONAL	11	1 1/4	10T
K0505-01	FORD TRUCK	10	1 3/8	10T
K0508-01	INTERNATIONAL	9 7/8	15/16	10T
K0509-01	INTERNATIONAL	14	1 1/2	10T
K0510-01	INTERNATIONAL	10	1 1/4	10T
K0511-01	FORD MED. TRUCK	12 3/4	1 1/2	10T
K0513-01	CHEVROLET TRUCK	13	1 1/2	10T
K0514-01	CHEVROLET TRUCK	13	1 1/2	10T
K0518-01	HONDA	8 1/2	27/32	20T
K0520-01	INTERNATIONAL	13 3/4	1 1/2	10T
K0622-01	FORD TRUCK	11 1/2	1 1/16	10T
K0648-01	FORD	10 1/2	1 1/16	10T
K1009-01	FORD TRUCK	11	1 1/16	10T

© 2014 ZF North American Operations, Inc. All Rights Reserved. No portion of this work may be reproduced or copied by any means without the prior approval of ZF North American Operations, Inc.

CLUTCH KITS

PART #	MAKE	O.D.	I.D.	TEETH
K1009-02	FORD TRUCK	11	1 1/16	10T
K1015-01	FORD TRUCK	12	1 1/16	10T
K1042-01	CHEVROLET	9 1/8	1 1/8	10T
K1117-01	GEO	7 7/8	7/8	20T
K1122-01	FORD	7 7/8	7/8	20T
K1123-01	FORD	9 7/16	1 1/16	23T
K1506L-02	CHRYSLER	10 1/2	1	23T
K1510-01	JEEP	10 1/2	1 1/16	10T
K1510-02	CHEVROLET	10 1/2	1 1/8	10T
K1510-03	JEEP	10 1/2	1 1/8	10T
K1510-04	JEEP	10 1/2	1 1/8	10T
K1510-05	CHEVROLET	10	1 1/8	10T
K1525-01	DODGE	10	1	23T
K1675-03	CHRYSLER	10 1/2	1	23T
K1675-04	CHEVROLET	10	1 1/8	10T
K1675-06	JEEP	10 1/2	1 1/16	10T
K1675-08	AMERICAN MOTORS	10 1/2	1 1/8	10T
K1675-09	AMERICAN MOTORS	10 1/2	1 1/8	10T
K1675-10	CHEVROLET	10 1/2	1 1/8	10T
K1675-13	JEEP	10 1/2	1 1/8	10T
K1675-21	CHEVROLET	10 1/2	1 1/8	26T
K1675-22	JEEP	10 1/2	1 1/8	10T
K1675-22CB	JEEP	10 1/2	1 1/8	10T
K1675-23	JEEP	10 1/2	1 1/8	10T
K1675-23CB	JEEP	10 1/2	1 1/8	10T
K1858-05	DODGE	11	1	23T
K1858-07	JEEP	11	1 1/8	10T
K1862-01	CHEVROLET	12	1 1/8	10T
K1862-04	DODGE TRUCK	12	1	23T
K1862-05	PONTIAC	11	1 1/8	10T
K1862-06	CHEVROLET	10 1/2	1 1/8	10T
K1874-01	BUICK	10 3/8	1 1/8	26T
K1874-02	CHEVROLET	10 1/2	1 1/8	10T
K1874-03	JEEP	10 1/2	1 1/8	10T
K1874-05	BUICK	10	1 1/8	10T
K1874-06	CHEVROLET	10	1 1/8	10T
K1877-02	GMC TRUCK	11	1 1/8	10T
K1877-04	CHEVROLET	11	1 1/8	26T
K1877-06	CHRYSLER	11	1	23T
K1877-06HD	CHRYSLER	11	1	23T
K1877-08	GMC TRUCK	11	1	14T
K1877-09	GMC TRUCK	11	1 1/8	10T

PART #	MAKE	O.D.	I.D.	TEETH
K1878-02	CHEVROLET	9 1/8	1 1/8	10T
K1878-03	AMERICAN MOTORS	9 1/8	1 1/8	10T
K1880-01	CHEVROLET	7	1	14T
K1882-01	CHEVROLET TRUCK	13	1 1/2	10T
K1882-02	CHEVROLET TRUCK	12 7/8	1 1/2	10T
K1882-03	CHEVROLET TRUCK	12 7/8	1 1/2	10T
K1882-03CB	CHEVROLET TRUCK	12 7/8	1 1/2	10T
K1882-04	CHEVROLET TRUCK	13	1 1/2	10T
K1885-01	DODGE	7 1/2	13/16	24T
K1886-04	VOLKSWAGEN	7 1/2	13/16	24T
K1890-01	AMERICAN MOTORS	10 1/2	1 1/8	10T
K1890-03	JEEP	10 1/2	1 1/8	10T
K1890-03CB	JEEP	10 1/2	1 1/8	10T
K1890-04	JEEP	10 1/2	1 1/8	10T
K1890-04CB	JEEP	10 1/2	1 1/8	10T
K1890-05	JEEP	10 1/2	1 1/8	10T
K1890-05CB	JEEP	10 1/2	1 1/8	10T
K1896-01	CHEVROLET	8	1	14T
K1902-01	CHEVROLET	9 1/8	1	14T
K1902-02	CHEVROLET	9 1/8	1 1/8	10T
K1902-03	CHEVROLET	9 1/8	1	14T
K1904-01	GMC TRUCK	9 1/8	1	14T
K1904-02	JEEP	9 1/8	1	14T
K1904-03	GMC TRUCK	9 1/8	1	14T
K1904-04	JEEP	9 1/8	1	14T
K1904-08	GMC TRUCK	9 1/8	1 1/8	26T
K1904-09	GMC TRUCK	9 1/8	1 1/8	26T
K1904-10	GMC TRUCK	9 1/8	1 1/8	26T
K1909-02	PONTIAC	12	1 1/8	10T
K1909-02CB	PONTIAC	12	1 1/8	10T
K1909-02HD	PONTIAC	12	1 1/8	10T
K1909-02KL	PONTIAC	12	1 1/8	10T
K1909-06	GMC TRUCK	11 3/4	1 1/8	10T
K1909-06HD	GMC TRUCK	11 7/8	1 1/8	10T
K1909-10	DODGE TRUCK	12	1	23T
K1911-01	CHEVROLET	10 3/4	1 1/8	26T
K1912-20	CHEVROLET	8	1	14T
K1914-01	CHEVROLET	9 1/8	1	14T
K1914-02	JEEP	9 1/8	1	14T
K1914-03	JEEP	9 1/8	1	14T
K1914-06	JEEP	9 1/8	1	14T
K1914-07	JEEP	9 1/8	1	14T

© 2014 ZF North American Operations, Inc. All Rights Reserved. No portion of this work may be reproduced or copied by any means without the prior approval of ZF North American Operations, Inc.

SACHS

CLUTCH KITS

PART #	MAKE	O.D.	I.D.	TEETH
K1919-01	CHEVROLET TRUCK	13	1 1/2	10T
K1919-03	FORD MED. TRUCK	13	1 3/8	10T
K1919-03CB	FORD MED. TRUCK	13	1 3/8	10T
K1919-04	CHEVROLET TRUCK	13	1 1/2	10T
K1919-05	CHEVROLET TRUCK	12 7/8	1 1/2	10T
K1919-05KL	CHEVROLET TRUCK	12 7/8	1 1/2	10T
K1919-20	CHEVROLET TRUCK	12 7/8	1 1/2	10T
K31220-01	ISUZU MED. TRUCK	13 3/4	1 1/2	10T
K31230-01	HINO MED. TRUCK	13 3/4	1 3/4	10T
K31570-01	NISSAN MED. TRUCK	12 3/4	1 3/16	16T
K31981-01	HINO MED. TRUCK	15	1 3/4	10T
K31992-01	HINO MED. TRUCK	12 3/4	1 1/2	10T
K32232-01	CHEVROLET TRUCK	10 3/4	1	24T
K32232-02	CHEVROLET TRUCK	10 3/4	1	24T
K34451-01	HINO MED. TRUCK	11 3/4	1 1/2	10T
K5317-02	JEEP	8 1/2	15/16	10T
K5473-01	CHEVROLET	11	1 1/8	10T
K5473-03	DODGE TRUCK	11	1	23T
K70007-01	AUDI	9 1/2	15/16	23T
K70009-01	BMW	9 1/2	1 1/8	10T
K70010-01	BMW	8 1/2	1 1/8	10T
K70013-01	MERCEDES BENZ	9	1 1/8	26T
K70014-02	MERCEDES BENZ	9 1/2	1 1/8	26T
K70021-01	PORSCHE	9 7/16	1 1/32	23T
K70021-02	PORSCHE	9 7/16	1 1/32	23T
K70029-01	VOLVO	9	1	22T
K70029-02	VOLVO	9	1	22T
K70029-03	VOLVO	9	1	22T
K70029-04	VOLVO	9	1	22T
K70030-01	VOLVO	9	1	22T
K70037-02	VOLKSWAGEN	8 1/4	7/8	28T
K70037-04	VOLKSWAGEN	8 1/4	7/8	28T
K70037-05	VOLKSWAGEN	8 1/4	13/16	24T
K70038-01	VOLKSWAGEN	9	7/8	28T
K70038-02	VOLKSWAGEN	9	7/8	28T
K70038-02F	AUDI	9	7/8	28T
K70043-01	CHEVROLET	11	1 1/8	26T
K70045-01	CHEVROLET	9 11/16	1	23T
K70046-01	ISUZU TRUCK	9 5/8	1	24T
K70047-01	GEO	8 7/8	1	14T
K70048-01	DODGE	9 7/8	1 1/16	23T
K70050-01	FORD	8 1/2	15/16	22T

PART #	MAKE	O.D.	I.D.	TEETH
K70050-02	MAZDA	8 1/2	15/16	22T
K70051-01	NISSAN / DATSUN	8 1/2	13/16	18T
K70054-01	GMC TRUCK	12	1 1/8	10T
K70054-01HD	GMC TRUCK	12	1 1/8	10T
K70059-02	MAZDA TRUCK	9 7/8	1	23T
K70061-01	SUZUKI	7 1/8	3/4	18T
K70061-02	SUZUKI TRUCK	7 1/8	3/4	18T
K70062-01	TOYOTA	9 1/4	1 1/8	21T
K70062-02	TOYOTA	9 1/4	1 1/8	21T
K70062-03	TOYOTA TRUCK	9 1/4	1 1/8	21T
K70062-04	LEXUS	9 3/8	1 1/8	21T
K70064-01	TOYOTA	8 7/8	1	20T
K70064-02	TOYOTA	8 7/8	1	20T
K70067-01	DODGE	9 1/8	15/16	17T
K70069-01	SAAB	9 1/2	3/4	17T
K70073-01	ACURA	8 5/8	1 1/32	24T
K70073-02	HONDA	8 5/8	1 1/32	24T
K70073-02HD	HONDA	8 5/8	1 1/32	24T
K70073-04	ACURA	8 3/4	1	24T
K70074-01	AUDI	9 1/2	15/16	23T
K70076-01	BMW	8 1/2	1 1/8	10T
K70079-02	TOYOTA	8 3/8	15/16	21T
K70079-03	CHEVROLET	8 3/8	15/16	21T
K70079-04	TOYOTA	8 3/8	15/16	21T
K70081-01	DODGE TRUCK	9 1/8	1	19T
K70081-02	DODGE TRUCK	9 1/8	1 1/8	10T
K70081-03	DODGE TRUCK	9 1/8	1	14T
K70081-04	DODGE TRUCK	9 1/8	1	19T
K70082-01	DODGE TRUCK	11	1	19T
K70083-01	CHEVROLET	9 1/8	1	14T
K70084-01	CHEVROLET	9 11/16	1 1/8	26T
K70096-01	SUBARU	8 1/2	1	24T
K70098-01	NISSAN / DATSUN	8 7/8	1	24T
K70098-02	NISSAN / DATSUN	8 7/8	1	24T
K70099-01	ACURA	9 1/2	1 1/32	24T
K70100-02	FORD TRUCK	11 7/8	1 1/4	10T
K70100-04	FORD TRUCK	11 7/8	1 1/4	10T
K70102-01	FORD TRUCK	12 1/4	1 1/4	10T
K70106-01	VOLKSWAGEN	8 1/2	1	28T
K70106-02	VOLKSWAGEN	8 3/4	7/8	28T
K70107-01	HONDA TRUCK	10 1/4	1	24T
K70110-01	VOLVO	9	27/32	20T

© 2014 ZF North American Operations, Inc. All Rights Reserved. No portion of this work may be reproduced or copied by any means without the prior approval of ZF North American Operations, Inc.

CLUTCH KITS

PART #	MAKE	O.D.	I.D.	TEETH
K70110-02	VOLVO	9	27/32	20T
K70115-01	MAZDA	9 1/4	1	23T
K70116-01	TOYOTA TRUCK	9 7/8	1 1/8	21T
K70116-02	TOYOTA TRUCK	9 7/8	1 1/8	21T
K70118-01	NISSAN TRUCK	9 1/2	1	24T
K70119-01	DODGE TRUCK	12 1/4	1 1/4	10T
K70119-01CB	DODGE TRUCK	12 1/4	1 1/4	10T
K70119-01HD	DODGE TRUCK	12 1/4	1 1/4	10T
K70119-01KL	DODGE TRUCK	12 1/4	1 1/4	10T
K70120-01	FORD TRUCK	12 1/4	1 1/4	10T
K70122-01	BMW	9 1/2	1 1/8	10T
K70123-02	BMW	10 1/2	1 3/8	10T
K70124-01	FORD	9 7/16	1	23T
K70124-02	FORD	8 7/8	1	23T
K70125-01	FORD	9 7/16	1	23T
K70127-01	SAAB	9 7/16	1	14T
K70127-03	SAAB	9 7/16	1	14T
K70128-01	VOLKSWAGEN	8 1/4	7/8	28T
K70128-02	VOLKSWAGEN	8 1/4	13/16	24T
K70128-03	VOLKSWAGEN	8 1/4	7/8	28T
K70128-04	VOLKSWAGEN	8 1/4	13/16	24T
K70130-01	FORD	11	1 1/16	10T
K70131-01	CHRYSLER	9	15/16	17T
K70132-01	DODGE	8 1/2	15/16	17T
K70134-02	DODGE TRUCK	11	1 1/8	10T
K70135-01	ALFA ROMEO	9	29/32	20T
K70138-01	MAZDA	8 1/2	15/16	22T
K70141-01	TOYOTA	9 7/8	1 1/4	14T
K70142-01	SAAB	9	1	14T
K70142-02	SAAB	9	1	14T
K70143-01	SAAB	9	1	14T
K70144-02	DODGE TRUCK	12	1 1/8	10T
K70147-01	GMC TRUCK	11 7/8	1 1/8	10T
K70149-01	GMC TRUCK	11 3/4	1 1/8	10T
K70150-01	GMC TRUCK	11 7/8	1 1/8	10T
K70152-01	FORD	11	1 1/16	10T
K70153-01	FORD TRUCK	11 1/2	1 1/16	10T
K70154-04	FORD TRUCK	9	1	23T
K70156-01	CHEVROLET	8 1/2	1	14T
K70160-01	FORD TRUCK	11 1/2	1 1/16	10T
K70160-04	FORD TRUCK	11 1/2	1 1/16	10T
K70162-02	SAAB	8 1/2	1	14T

PART #	MAKE	O.D.	I.D.	TEETH
K70163-01	CHEVROLET	8 7/8	1	14T
K70165-01	TOYOTA TRUCK	9 7/8	1 1/8	21T
K70169-01	GMC TRUCK	11	1 1/8	10T
K70169-02	GMC TRUCK	11	1 1/8	10T
K70178-01	HYUNDAI	8 1/2	7/8	20T
K70179-01	HYUNDAI	8 7/8	7/8	20T
K70180-01	KIA	8 7/8	15/16	22T
K70184-01	CHEVROLET	9 11/16	1 1/8	26T
K70185-01	CHEVROLET	11 3/4	1 1/8	26T
K70185-02	PONTIAC	11 3/4	1 1/8	26T
K70187-02	GMC TRUCK	11 7/8	1 1/8	10T
K70187-02CB	GMC TRUCK	11 7/8	1 1/8	10T
K70187-02HD	GMC TRUCK	11 7/8	1 1/8	10T
K70188-01	GMC TRUCK	12	1 1/8	10T
K70188-01CB	GMC TRUCK	12	1 1/8	10T
K70188-01HD	GMC TRUCK	12	1 1/8	10T
K70192-01	DODGE	12 1/4	1 1/8	26T
K70193-01	PORSCHE	9 7/16	31/32	23T
K70196-01	SUZUKI	7 1/2	3/4	18T
K70200-01	CHEVROLET TRUCK	13	1 1/2	10T
K70205-01	AUDI	9	15/16	23T
K70206-01	BMW	9 1/2	1 1/8	10T
K70207-01	BMW	9 1/2	1 3/8	10T
K70209-01	LAND ROVER	10 1/2	1	23T
K70210-01	LAND ROVER	10 1/2	1	23T
K70215-01	LAMBORGHINI	9 7/8	1 1/8	10T
K70233-01	ISUZU TRUCK	10 7/8	1	24T
K70235-01	SAAB	8 1/2	1	14T
K70238-01	BMW	9 1/2	1 1/8	10T
K70240-01	CHEVROLET TRUCK	8 7/8	7/8	20T
K70241-01	FORD TRUCK	13	1 3/8	10T
K70241-01CB	FORD TRUCK	13	1 3/8	10T
K70241-01HD	FORD TRUCK	13	1 3/8	10T
K70241-01KL	FORD TRUCK	13	1 3/8	10T
K70244-01	FORD TRUCK	12 1/4	1 1/4	10T
K70244-01CB	FORD TRUCK	12 1/4	1 1/4	10T
K70244-01HD	FORD TRUCK	12 1/4	1 1/4	10T
K70246-01	PORSCHE	9 7/16	1 1/32	23T
K70247-01	MERCEDES BENZ	9 1/2	1 1/8	26T
K70248-01	VW TRUCK	8 5/8	7/8	28T
K70249-01	AUDI	8 5/8	7/8	28T
K70251-01	FORD TRUCK	10 1/8	1	23T

© 2014 ZF North American Operations, Inc. All Rights Reserved. No portion of this work may be reproduced or copied by any means without the prior approval of ZF North American Operations, Inc.

SACHS

CLUTCH KITS

PART #	MAKE	O.D.	I.D.	TEETH
K70251-03	FORD TRUCK	10 1/8	1	23T
K70252-01	MITSUBISHI TRUCK	8 7/8	1 1/16	23T
K70253-02	DODGE TRUCK	12 1/4	1 1/4	10T
K70253-02CB	DODGE TRUCK	12 1/4	1 1/4	10T
K70253-02HD	DODGE TRUCK	12 1/4	1 1/4	10T
K70253-02KL	DODGE TRUCK	12 1/4	1 1/4	10T
K70254-01	SAAB	9	1	14T
K70255-01	VOLVO	9 7/16	7/8	20T
K70258-01	CHEVROLET	8 7/8	1	14T
K70260-01	FORD	8 1/2	3/4	17T
K70263-01	FORD TRUCK	13	1 1/4	10T
K70263-01CB	FORD TRUCK	13	1 1/4	10T
K70263-01HD	FORD TRUCK	13	1 1/4	10T
K70264-01	MITSUBISHI	8 7/8	1	23T
K70265-01	CHEVROLET	8 1/2	13/16	24T
K70267-01	DAEWOO	8 7/8	3/4	24T
K70267-02	SUZUKI	8 7/8	3/4	24T
K70268-01	DODGE TRUCK	10 1/2	1 1/8	10T
K70272-01	FORD	11	1 1/16	10T
K70273-01	SUZUKI	8 1/2	7/8	20T
K70274-01	HONDA	7 1/2	7/8	20T
K70275-01	VOLVO	9	13/16	20T
K70279-01	DODGE TRUCK	13	1 3/8	10T
K70279-01CB	DODGE TRUCK	12 7/8	1 3/8	10T
K70279-01HD	DODGE TRUCK	13	1 3/8	10T
K70279-01KL	DODGE TRUCK	13	1 3/8	10T
K70280-01	BMW	9 1/8	1 1/8	10T
K70281-01	BMW	9 1/2	1 1/8	10T
K70282-01	BMW	9 1/2	1 3/8	10T
K70283-01	DODGE TRUCK	12 1/2	1 3/8	10T
K70284-01	PORSCHE	9 7/16	1	23T
K70284-02	PORSCHE	9 7/16	1 1/8	23T
K70284-03	PORSCHE	9 7/16	1 1/32	23T
K70284-04	PORSCHE	9 1/2	1 1/32	23T
K70284-05	PORSCHE	9 7/16	1 1/32	23T
K70285-01	GMC TRUCK	12	1 1/8	10T
K70285-02	GMC TRUCK	12	1 1/8	10T
K70286-01	AUDI	9 1/2	15/16	23T
K70287-02	AUDI	9 7/16	15/16	23T
K70288-02	BMW	9 1/2	1 1/8	10T
K70288-03	BMW TRUCK	9 7/16	1 1/8	10T
K70290-01	PORSCHE	9 7/16	1 1/32	23T

PART #	MAKE	O.D.	I.D.	TEETH
K70290-02	PORSCHE	9 7/16	1 1/32	23T
K70292-01	HYUNDAI	8 7/8	13/16	20T
K70292-02	HYUNDAI TRUCK	8 7/8	7/8	20T
K70293-01	CHEVROLET TRUCK	13	1 1/2	10T
K70294-01	MERCEDES BENZ	9 1/8	1 1/8	26T
K70297-01	JEEP	9	1	19T
K70298-01	JEEP	10 3/8	1 1/8	10T
K70299-01	LINCOLN	9 5/16	1 1/8	10T
K70301-01	MAZDA	8 7/8	15/16	22T
K70302-01	GMC TRUCK	11 5/8	1 3/8	10T
K70303-01	GMC TRUCK	12	1 3/8	10T
K70304-01	HYUNDAI	8 1/2	7/8	20T
K70305-01	SATURN	9	1	14T
K70305-02	SATURN TRUCK	9	1	14T
K70306-01	SATURN	8 3/8	15/16	22T
K70307-01	SUZUKI	7 7/8	7/8	20T
K70308-02	NISSAN TRUCK	9 7/8	1	24T
K70310-01	HONDA	8 3/8	1 1/32	24T
K70311-01	FORD	8 7/8	15/16	22T
K70313-01	FORD TRUCK	10 1/8	1	23T
K70314-01	CHRYSLER	9	1	23T
K70315-01	CHEVROLET	8 1/2	1	14T
K70316-01	VOLKSWAGEN	9	7/8	28T
K70316-01F	VOLKSWAGEN	9	7/8	28T
K70317-01	KIA	7 7/8	7/8	20T
K70318-01	GMC TRUCK	12	1 1/8	10T
K70318-02	GMC TRUCK	12	1 1/8	10T
K70319-01	AUDI	8 7/8	7/8	28T
K70319-01F	AUDI	8 7/8	7/8	28T
K70320-01	ISUZU MED. TRUCK	11 3/4	1	24T
K70320-02	CHEVROLET TRUCK	11 3/4	1 1/8	21T
K70320-03	CHEVROLET TRUCK	12	1 1/8	21T
K70321-01	CHEVROLET TRUCK	12 3/4	1 1/2	10T
K70322-01	CHEVROLET TRUCK	12	1 1/8	21T
K70323-01	CHEVROLET TRUCK	14	1 3/4	10T
K70324-01	CHEVROLET TRUCK	14	1 3/4	10T
K70325-01	NISSAN MED. TRUCK	10 3/16	1	24T
K70326-01	NISSAN MED. TRUCK	11 3/4	1	24T
K70327-01	NISSAN MED. TRUCK	12 3/4	1 3/16	16T
K70328-01	NISSAN MED. TRUCK	13 3/4	1 1/2	10T
K70328-02	NISSAN MED. TRUCK	15	1 5/8	10T
K70329-01	NISSAN MED. TRUCK	15	1 3/4	10T

© 2014 ZF North American Operations, Inc. All Rights Reserved. No portion of this work may be reproduced or copied by any means without the prior approval of ZF North American Operations, Inc.

CLUTCH KITS

PART #	MAKE	O.D.	I.D.	TEETH
K70329-02	NISSAN MED. TRUCK	15	1 5/8	10T
K70330-01	CHEVROLET	8 13/16	1	14T
K70332-01	HYUNDAI	8 7/8	7/8	20T
K70333-01	GMC TRUCK	11 1/2	1 1/8	10T
K70333-02	GMC TRUCK	11 1/2	1 1/8	10T
K70335-01	CADILLAC	9 1/2	1	14T
K70336-01	VOLKSWAGEN	9 1/2	15/16	23T
K70337-01	FORD TRUCK	13	1 1/4	10T
K70338-01	SUZUKI TRUCK	9 1/4	1 1/8	21T
K70339-01	MINI	8 1/2	1	14T
K70340-01	CHRYSLER	9 7/16	1 1/8	26T
K70341-01	MINI	7 7/8	13/16	18T
K70341-02	MINI	7 7/8	3/4	17T
K70342-01	JEEP	9	1	19T
K70342-02	JEEP	9	1	10T
K70344-01	DODGE	9 1/2	15/16	17T
K70345-01	HONDA	8 1/2	1 1/8	24T
K70346-01	HONDA	8 1/2	1 1/8	24T
K70350-01	AUDI	9 7/16	7/8	23T
K70350-02	AUDI	9 3/8	1	23T
K70351-01	DODGE TRUCK	11 1/2	1 1/8	10T
K70352-01	HONDA	9 1/2	1	24T
K70353-01	MERCEDES BENZ	9 7/16	1 1/8	26T
K70355-01	NISSAN / DATSUN	9 1/2	1	24T
K70356-01	SATURN	9	1	14T
K70357-01	NISSAN / DATSUN	9 7/8	1	24T
K70358-02	NISSAN / DATSUN	9 7/8	1	24T
K70362-01	SUBARU	9	1	24T
K70366-01	HONDA TRUCK	9	1 1/32	24T
K70367-01	MAZDA	8 1/2	15/16	22T
K70368-01	MAZDA	9 1/2	1	23T
K70370-01	MITSUBISHI	8 1/2	7/8	20T
K70372-01	GMC TRUCK	11 3/4	1 1/4	10T
K70375-01	GMC TRUCK	11	1 1/8	10T
K70375-01HD	GMC TRUCK	11	1 1/8	10T
K70377-01	SAAB	9	1	14T
K70380-01	BMW	9 1/2	1 3/8	10T
K70381-01	ACURA	8 7/8	1	24T
K70381-02	HONDA	8 7/8	1	24T
K70383-01	MAZDA	9 5/16	1 1/16	23T
K70384-01	MITSUBISHI	9 1/2	1 1/16	23T
K70388-01	SUBARU	9 1/2	1	24T

PART #	MAKE	O.D.	I.D.	TEETH
K70394-01	GMC TRUCK	10 3/8	1 1/8	26T
K70396-01	KIA TRUCK	9 1/2	1	23T
K70397-01	MAZDA	8 7/8	15/16	22T
K70399-01	MERCEDES BENZ	9 7/16	1 1/8	26T
K70401-01	VOLVO	9 7/16	1	23T
K70401-02	VOLVO	9 7/16	1	23T
K70402-01	VOLKSWAGEN	9 1/4	15/16	23T
K70403-01	CHEVROLET	9 7/16	1	14T
K70406-01	SUBARU	9 1/2	1	24T
K70408-01	HYUNDAI TRUCK	9 1/4	7/8	20T
K70409-01	KIA	8 1/2	7/8	20T
K70411-01	CHEVROLET	11 3/4	1 1/8	26T
K70412-01	CHEVROLET	8 7/8	1	14T
K70414-01	GMC TRUCK	11 1/2	1 3/8	10T
K70415-01	CADILLAC	10 1/16	1	23T
K70415-01F	CADILLAC	10	1	23T
K70417-01	FORD TRUCK	9 1/2	1	23T
K70419-01	PORSCHE	9 7/16	1	23T
K70421-01	SAAB	9	1	14T
K70422-03	VOLKSWAGEN	9	7/8	28T
K70422-03F	VOLKSWAGEN	9	7/8	28T
K70422-04F	VOLKSWAGEN	9	7/8	28T
K70423-01	VOLKSWAGEN	9 1/8	7/8	28T
K70424-01	PORSCHE	9 7/16	15/16	23T
K70425-01	NISSAN TRUCK	9 13/16	1	24T
K70426-01	NISSAN TRUCK	9 1/2	1	24T
K70427-01	NISSAN TRUCK	10 1/4	1	24T
K70428-01	FORD	11	1 1/16	10T
K70429-01	FORD	10	1 1/16	10T
K70430-01	FORD TRUCK	11 7/8	1 1/4	10T
K70431-01	FORD TRUCK	12	1 1/4	10T
K70432-01	FORD TRUCK	13	1 3/8	10T
K70433-01	VOLVO	9	1	23T
K70433-02	VOLVO	9	1	23T
K70434-01	VOLVO	9 7/16	1	23T
K70436-01	BMW	9 7/16	1 1/8	22T
K70442-01	MITSUBISHI	9	7/8	20T
K70443-01	SAAB	8 7/8	1	24T
K70444-01	SAAB	9 7/16	1	14T
K70444-02	SAAB	9 7/16	1	23T
K70445-01	FORD	9 3/8	1	23T
K70446-01	VOLKSWAGEN	9 7/16	15/16	23T

© 2014 ZF North American Operations, Inc. All Rights Reserved. No portion of this work may be reproduced or copied by any means without the prior approval of ZF North American Operations, Inc.

SACHS

CLUTCH KITS

PART #	MAKE	O.D.	I.D.	TEETH
K70446-01F	VOLKSWAGEN	9 7/16	15/16	23T
K70447-01	HONDA	7 1/2	7/8	20T
K70448-01	HYUNDAI	8 7/8	13/16	20T
K70449-01	HYUNDAI	8 7/8	13/16	20T
K70450-01	HYUNDAI	8 7/8	7/8	20T
K70451-01	PORSCHE	9 7/16	15/16	23T
K70452-01	FORD TRUCK	11 1/2	1 1/16	10T
K70452-02	FORD TRUCK	11 1/2	1 1/16	10T
K70460-01	FORD	8 7/8	15/16	22T
K70461-01	SUBARU	9	1	24T
K70463-01	FORD	9 7/16	1	14T
K70463-01F	FORD	9 7/16	1	14T
K70464-01	GMC TRUCK	9 1/8	1 1/8	26T
K70465-01	VW TRUCK	9 7/16	1 1/8	26T
K70466-01	AUDI	9 7/16	15/16	23T
K70467-01	BMW	9	7/20	26T
K70468-01	AUDI	9 7/16	15/16	23T
K70469-01	PONTIAC	9 7/16	1 1/8	26T
K70470-01	SAAB	9 7/16	1	20T
K70471-01	BMW	9 7/16	1 1/8	10T
K70472-01	MINI	7 7/8	3/4	17T
K70473-01	MINI	9	1	28T
K70474-01	MERCEDES BENZ	9 7/16	1 1/8	26T
K70475-01	SAAB	9 7/16	1	14T
K70476-01	MERCEDES BENZ	9 7/16	1 1/8	26T
K70477-01	MERCEDES BENZ	9 1/8	1 1/8	26T
K70479-01F	DODGE TRUCK	13	1 3/8	10T
K70479-1FCB	DODGE TRUCK	12 7/8	1 3/8	10T
K70479-1FHD	DODGE TRUCK	13	1 3/8	10T
K70479-1FKL	DODGE TRUCK	13	1 3/8	10T
K70480-01	BMW	9 7/16	1 1/8	26T
K70481-01	BMW	9 7/16	1 1/8	22T
K70482-01	AUDI	9 7/16	1 1/8	23T
K70485-02	AUDI	9 7/16	15/16	23T
K70486-01	CHRYSLER	10 3/4	7/8	17T
K70487-01F	GMC TRUCK	11 7/8	1 3/8	10T
K70495-01	TOYOTA	8 3/8	15/16	21T
K70496-01	BMW	9 7/16	1 1/8	22T
K70498-01	JEEP	10 3/8	1 1/8	10T
K70499-01	PORSCHE	9 7/16	1 1/16	23T
K70500-01	SUBARU	9 1/2	15/16	24T
K70504-01	NISSAN / DATSUN	9 1/2	1	21T

PART #	MAKE	O.D.	I.D.	TEETH
K70508-01	HYUNDAI	9 1/4	1 1/16	23T
K70510-01	HYUNDAI	8 1/2	7/8	20T
K70511-01	PONTIAC	9	1 1/8	26T
K70515-01	MITSUBISHI TRUCK	9	7/8	20T
K70516-01	MITSUBISHI	9	7/8	20T
K70517-01	MITSUBISHI	9 7/16	1	23T
K70518-01	SUZUKI	8 1/2	7/8	20T
K70520-01	BMW	9 1/8	1 5/32	22T
K70526-02	BMW	9 7/16	1 1/8	26T
K70528-01	BMW	9 7/16	1 1/8	22T
K70530-01	PORSCHE	9 1/2	15/16	23T
K70531-02	BUICK	9 7/8	1	23T
K70531-03	SAAB	9 13/16	7/8	23T
K70532-01	SMART	7 7/8	1/2	17T
K70533-01	BMW	9 1/8	1 5/32	22T
K70534-01	AUDI	9 7/16	1 1/8	23T
K70535-01	BMW	9 7/16	1 1/8	22T
K70538-01	SAAB	9	1	14T
K70539-01	SAAB	9 1/2	1	14T
K70540-01	MITSUBISHI	8 7/8	7/8	20T
K70541-01	BMW	9 7/16	1 1/8	26T
K70542-01	MERCEDES BENZ	9 7/16	1 1/8	26T
K70543-01	MERCEDES BENZ	9 7/16	1 1/8	26T
K70544-01	PORSCHE	9 7/16	15/16	23T
K70545-01	VOLVO	9 7/16	1	20T
K70546-01	VOLVO	9 7/16	7/8	23T
K70547-01	SAAB	8 1/2	1	14T
K70548-01	BMW TRUCK	9 7/16	1	22T
K70549-01	LINCOLN	9 5/16	1 1/8	10T
K70550-01	FORD TRUCK	11	1 1/16	10T
K70550-02	FORD TRUCK	11	1 1/16	10T
K70551-01	VOLVO	9 7/16	27/32	20T
K70555-01	PORSCHE	9 7/16	1 1/32	23T
K70555-02	PORSCHE	9 7/16	1 1/32	23T
K70556-01	NISSAN / DATSUN	8 7/8	15/16	21T
K70557-01	HYUNDAI	9 1/4	1	23T
K70558-01	BMW	8 31/32	1 1/8	22T
K70559-01	HYUNDAI TRUCK	9 7/16	1	23T
K70560-01	PORSCHE	9 7/16	1 1/32	23T
K70600-01	VOLVO	9 7/16	1	23T
K70601-01	TOYOTA	8 3/8	1	21T
K70602-01	MITSUBISHI	8 7/8	7/8	20T

© 2014 ZF North American Operations, Inc. All Rights Reserved. No portion of this work may be reproduced or copied by any means without the prior approval of ZF North American Operations, Inc.

CLUTCH KITS

PART #	MAKE	O.D.	I.D.	TEETH
K70603-01	MAZDA	8 1/2	1 1/32	23T
K70604-01	HYUNDAI	9 1/4	7/8	20T
K70605-01	BMW	9 7/16	1 9/32	26T
K70606-01	MAZDA	9 13/16	1	23T
K70608-01	JEEP	10 3/8	1 1/8	10T
K70609-01	SUZUKI TRUCK	9 15/16	1 11/64	21T
K70610-01	LEXUS	9 5/16	1 3/16	21T
K70611-01	SCION TRUCK	8 3/8	31/32	21T
K70612-01	BMW	9 7/16	1 3/8	26T
K70613-01	AUDI	9 7/16	15/16	23T
K70614-01	AUDI	9 7/16	15/16	28T
K70615-01	MITSUBISHI	9 1/2	1	23T
K70616-01	HONDA	7 1/2	7/8	20T
K70617-01	AUDI	9 7/16	15/16	23T
K70618-01	HONDA	8 7/8	1	24T
K70619-01	AUDI	9 7/16	1	27T
K70620-01	DODGE	9 7/16	1 27/64	26T
K70620-02	DODGE	9 7/16	15/16	10T
K70621-01	FORD	9	7/8	22T
K70622-01	MITSUBISHI	9	3/4	20T
K70624-01	FORD	9 3/4	1 1/8	28T
K70625-01	FORD	10 1/8	1 1/8	26T
K70626-01	CHEVROLET	8 15/32	25/32	20T
K70627-01	HYUNDAI	9 3/8	1 1/8	23T
K70628-01	CHEVROLET	11 3/4	1 1/8	26T
K70629-01	CHEVROLET	8 5/64	5/8	14T
K70630-01	JEEP	11	1 1/8	10T
K70631-01	FORD TRUCK	12	1 1/4	10T
K70633-01	CHEVROLET	10 1/8	1	23T
K70634-01	HYUNDAI	8 1/2	57/64	20T
K70635-01	NISSAN / DATSUN	8 1/32	55/64	26T
K70638-02F	VOLKSWAGEN	9	7/8	28T
K70639-01	VOLKSWAGEN	9 7/16	7/8	28T
K70640-01	VOLKSWAGEN	8 21/32	7/8	28T
K70641-01	VOLKSWAGEN	9 29/64	15/16	23T
K70642-01	HYUNDAI TRUCK	9 29/64	1	23T
K70644-01	HYUNDAI TRUCK	9 29/64	1	23T
K70645-01	FORD			
K70648-01	BMW			
K70651-01	BMW			
K70652-01	MERCEDES BENZ			
K70657-01	VOLKSWAGEN			

PART #	MAKE	O.D.	I.D.	TEETH
K70658-01	HYUNDAI TRUCK			
K70687-01	DODGE TRUCK	13	1 1/4	10T
K70687-01CB	DODGE TRUCK	13	1 1/4	10T
K70687-01HD	DODGE TRUCK	13	1 1/4	10T
K70713-01	VOLKSWAGEN			
K70771-01F	AUDI	9	15/16	23T
K70812-01	DODGE	8 7/8	13/16	17T
K70813-01	DODGE	9	7/8	17T
KF024-01	ALFA ROMEO	7 7/8	1	10T
KF026-01	ALFA ROMEO	8 1/2	1	10T
KF116-01	AUDI	7 1/2	13/16	24T
KF117-01	PORSCHE	8 1/2	13/16	24T
KF117-02	AUDI	8 1/2	13/16	24T
KF122-01	AUDI	9	13/16	24T
KF137-01	BMW	8 1/2	1 1/8	10T
KF137-02	BMW	8 1/2	1 1/8	10T
KF138-01	BMW	9	1 1/8	10T
KF139-01	BMW	9 1/2	1 1/8	10T
KF152-01	MERCEDES BENZ	8 1/2	1 1/8	10T
KF152-02	MERCEDES BENZ	8 1/2	1 1/8	10T
KF182-01	VOLKSWAGEN	7 1/8	13/16	24T
KF182-02	VOLKSWAGEN	7 1/8	13/16	24T
KF191-01	PORSCHE	8 1/2	13/16	24T
KF191-02	PORSCHE	8 1/2	13/16	24T
KF191-03	PORSCHE	8 1/2	13/16	24T
KF192-01	PORSCHE	7 7/8	13/16	24T
KF193-01	VOLKSWAGEN	7 7/8	13/16	24T
KF193-02	VOLKSWAGEN	7 7/8	13/16	24T
KF194-01	SAAB	7 1/2	7/8	10T
KF198-01	PORSCHE	8 1/2	13/16	24T
KF199-01	PORSCHE	7 1/8	13/16	24T
KF200-01	PORSCHE	8 7/8	7/8	20T
KF200-02	PORSCHE	8 7/8	1 1/32	23T
KF200-03	PORSCHE	8 7/8	13/16	24T
KF211-01	PEUGEOT	8 1/2	1 5/32	10T
KF215-01	FIAT	8 1/2	29/32	20T
KF224-01	VOLKSWAGEN	7 7/8	13/16	24T
KF224-02	VOLKSWAGEN	7 7/8	13/16	24T
KF225-01	VOLKSWAGEN	8 1/4	13/16	24T
KF229-01	VOLKSWAGEN	8 1/2	13/16	24T
KF238-01	FORD	7 1/2	3/4	17T
KF239-01	FIAT	7 1/2	3/4	17T

© 2014 ZF North American Operations, Inc. All Rights Reserved. No portion of this work may be reproduced or copied by any means without the prior approval of ZF North American Operations, Inc.

SACHS

CLUTCH KITS

PART #	MAKE	O.D.	I.D.	TEETH
KF242-01	VOLVO	8 1/2	1	10T
KF242-04	VOLVO	8 1/2	1	22T
KF242-05	VOLVO	8 1/2	1	22T
KF248-01	PORSCHE	9 7/16	1 1/32	23T
KF251-01	VW TRUCK	9	13/16	24T
KF252-01	PORSCHE	9 7/16	1 1/32	23T
KF255-01	PORSCHE	9 7/16	1	23T
KF288-01	VW TRUCK	8 1/2	3/4	24T
KF292-03	FIAT	7 7/8	29/32	20T
KF293-01	AUDI	9 1/2	13/16	24T
KF294-01	AUDI	8 1/4	13/16	24T
KF294-02	AUDI	8	13/16	24T
KF296-03	BMW	9	1 1/8	10T
KF297-01	MERCEDES BENZ	8 1/2	1 1/8	26T
KF297-02	MERCEDES BENZ	8 1/2	1 1/8	26T
KF297-03	MERCEDES BENZ	8 1/2	1 1/8	10T
KF298-02	PORSCHE	8 7/8	1 1/32	23T
KF322-02	MG	7 1/4	7/8	20T
KF330-01	MG	8	1	23T
KF393-04	TRIUMPH	8 1/2	1 1/4	10T
KF431-01	LAND ROVER	7 1/2	1 1/8	10T
KF436-01	SAAB	8 1/2	3/4	17T
KF436-02	SAAB	8 1/2	3/4	17T
KF436-03	SAAB	8 1/2	3/4	17T
KF437-01	SAAB	8 7/8	3/4	17T
KF437-02	SAAB	8 5/8	3/4	17T
KF530-01	TOYOTA	7 7/8	15/16	21T
KF532-01	NISSAN / DATSUN	7 7/8	1	24T
KF536-02	NISSAN TRUCK	8 7/8	1	24T
KF537-01	NISSAN / DATSUN	7 1/8	13/16	18T
KF537-03	NISSAN / DATSUN	7 1/8	13/16	18T
KF542-01	TOYOTA	8 7/8	1 1/8	21T
KF542-02	TOYOTA	8 7/8	1 1/8	21T
KF559-01	TOYOTA TRUCK	10 7/8	1 3/32	10T
KF561-01	TOYOTA	7 1/8	13/16	19T
KF561-02	TOYOTA	7 1/8	23/32	16T
KF566-02	TOYOTA	7 1/2	15/16	21T
KF566-03	TOYOTA	7 1/2	15/16	21T
KF573-01	MAZDA	8 1/2	13/16	22T
KF573-02	FORD TRUCK	8 1/2	15/16	22T
KF573-06	FORD TRUCK	8 1/2	15/16	22T
KF573-07	MAZDA	8 1/2	15/16	22T

PART #	MAKE	O.D.	I.D.	TEETH
KF576-01	MAZDA	7 7/8	15/16	22T
KF579-01	CHEVROLET TRUCK	8	1	10T
KF581-01	HONDA	7 1/2	13/16	19T
KF583-03	CHEVROLET	7 7/8	1	24T
KF583-04	SUBARU	7 7/8	7/8	21T
KF583-05	SUBARU	7 7/8	7/8	21T
KF586-03	MAZDA	7 1/4	7/8	20T
KF586-04	MAZDA	7 1/4	7/8	20T
KF587-01	NISSAN / DATSUN	7 7/8	1	24T
KF587-02	NISSAN / DATSUN	7 7/8	13/16	18T
KF587-03	NISSAN / DATSUN	7 7/8	13/16	18T
KF591-01	PLYMOUTH	8 1/2	7/8	20T
KF591-03	DODGE	8 1/2	7/8	20T
KF591-04	PLYMOUTH	8 1/2	1	23T
KF593-01	TOYOTA TRUCK	10 3/4	1 3/32	10T
KF594-01	NISSAN / DATSUN	8 7/8	1	24T
KF594-02	NISSAN / DATSUN	8 7/8	1	24T
KF594-04	NISSAN / DATSUN	8 7/8	1	24T
KF594-05	NISSAN / DATSUN	8 7/8	1	24T
KF595-01	HONDA	7 1/2	13/16	19T
KF596-01	TOYOTA	7 1/8	13/16	19T
KF597-01	NISSAN / DATSUN	7 1/2	1	24T
KF598-01	HONDA	7 7/8	7/8	21T
KF598-02	HONDA	7 7/8	7/8	21T
KF599-01	SUBARU	7 7/8	7/8	21T
KF599-02	SUBARU	7 7/8	3/4	23T
KF600-02	DODGE	7 1/4	7/8	20T
KF601-01	TOYOTA	7 1/2	15/16	21T
KF604-01	FORD TRUCK	8 1/2	15/16	22T
KF604-02	MAZDA	8 7/8	15/16	22T
KF604-04	MAZDA TRUCK	8 7/8	15/16	22T
KF605-01	MAZDA	7 1/2	7/8	20T
KF605-02	MAZDA	7 1/2	7/8	20T
KF605-03	MAZDA	7 1/2	7/8	20T
KF606-01	MAZDA	8 1/2	13/16	22T
KF608-01	HONDA	7 1/2	13/16	19T
KF609-01	HONDA	8 3/8	27/32	21T
KF612-01	HONDA	7 1/2	13/16	19T
KF612-02	HONDA	7 1/2	13/16	19T
KF613-01	TOYOTA	7 1/2	3/4	19T
KF613-02	TOYOTA	7 1/2	15/16	21T
KF614-01	TOYOTA	8 7/8	1	20T

© 2014 ZF North American Operations, Inc. All Rights Reserved. No portion of this work may be reproduced or copied by any means without the prior approval of ZF North American Operations, Inc.

CLUTCH KITS

PART #	MAKE	O.D.	I.D.	TEETH
KF614-02	TOYOTA	8 7/8	1	20T
KF614-04	TOYOTA	8 7/8	1	20T
KF615-01	HONDA	7 7/8	27/32	21T
KF618-01	NISSAN / DATSUN	9 7/16	1	24T
KF620-01	NISSAN TRUCK	9 1/2	1	24T
KF620-02	NISSAN TRUCK	9 7/16	1	24T
KF620-03	NISSAN TRUCK	9 1/2	1	24T
KF620-05	NISSAN TRUCK	9 1/2	1	24T
KF620-06	NISSAN TRUCK	9 1/2	1	24T
KF621-03	DODGE	7 7/8	7/8	20T
KF621-05	DODGE	7 7/8	7/8	20T
KF621-06	HYUNDAI	7 7/8	7/8	20T
KF628-01	TOYOTA	8 7/8	1 1/8	21T
KF628-02	TOYOTA TRUCK	8 7/8	1 1/8	21T
KF628-03	TOYOTA TRUCK	8 7/8	1 1/8	21T
KF628-04	TOYOTA TRUCK	8 7/8	1 1/8	21T
KF628-06	TOYOTA	8 3/8	15/16	21T
KF628-08	SUZUKI TRUCK	8 7/8	1 1/8	21T
KF630-01	NISSAN / DATSUN	9 1/2	1	24T
KF630-02	NISSAN / DATSUN	9 1/2	1	24T
KF633-01	NISSAN / DATSUN	8 7/8	1	24T
KF633-02	NISSAN / DATSUN	8 7/8	1	24T
KF634-01	NISSAN / DATSUN	8 7/8	1	24T
KF637-01	CHEVROLET TRUCK	8 1/2	1	24T
KF637-04	ISUZU	8 1/2	1	24T
KF638-01	FORD	8 7/8	15/16	22T
KF638-04	FORD	8 1/2	15/16	22T
KF639-02	NISSAN / DATSUN	7 1/2	13/16	18T
KF640-02	HONDA	7 1/2	27/32	21T
KF640-03	HONDA	7 7/8	27/32	20T
KF640-04	HONDA	7 7/8	27/32	21T
KF640-05	HONDA	7 7/8	27/32	20T
KF640-06	HONDA	7 7/8	27/32	20T
KF641-01	ACURA	8 7/8	31/32	24T
KF644-01	ALFA ROMEO	8 1/2	7/8	19T
KF649-01	BMW	9	1 1/8	10T
KF652-02	BMW	9 1/2	1 1/8	10T
KF652-03	BMW	9 1/2	1 1/8	10T
KF654-01	ISUZU	8 7/8	1	24T
KF659-01	MERCEDES BENZ	8	1 1/8	26T
KF660-01	MERCEDES BENZ	9	1 1/8	26T
KF660-02	MERCEDES BENZ	9	1 1/8	26T

PART #	MAKE	O.D.	I.D.	TEETH
KF663-01	MERCEDES BENZ	9 1/2	1 1/8	26T
KF675-01	MERCEDES BENZ	9	1 1/8	10T
KF678-03	FORD	9 7/16	1 1/16	23T
KF678-05	CHRYSLER	9 7/16	1 1/16	23T
KF684-01	TOYOTA	8 3/8	1	20T
KF685-01	CHRYSLER	8 7/8	1	23T
KF685-03	CHRYSLER	8 7/8	1	23T
KF686-01	NISSAN / DATSUN	9 7/16	1	24T
KF690-01	SUBARU	7 1/8	3/4	23T
KF690-02	SUBARU	7 1/8	3/4	23T
KF695-01	NISSAN / DATSUN	9 7/8	1	24T
KF695-02	NISSAN TRUCK	9 7/8	1	24T
KF695-03	NISSAN TRUCK	9 7/8	1	24T
KF696-01F	BMW	9	1 1/8	10T
KF701-01	HONDA	8 7/8	1 1/32	24T
KF701-02	HONDA	8 5/8	1 1/32	24T
KF702-01	HONDA	8 3/8	7/8	20T
KF702-02	HONDA	8 3/8	27/32	20T
KF702-03	HONDA	8 3/8	7/8	20T
KF703-01	DODGE TRUCK	9 7/16	1 3/16	14T
KF705-01	HONDA	8 3/8	31/32	24T
KF707-01	ISUZU TRUCK	9 1/2	1	24T
KF707-02	HONDA TRUCK	9 1/2	1	24T
KF707-04	ISUZU TRUCK	9 1/2	1	24T
KF708-01	ISUZU TRUCK	9 1/8	1	24T
KF709-01	TOYOTA	9 1/4	1 1/8	21T
KF710-01	MAZDA	7 7/8	15/16	22T
KF711-03	MAZDA TRUCK	8 1/2	15/16	22T
KF714-01	MAZDA	8 7/8	15/16	22T
KF716-04	TOYOTA	7 1/2	15/16	21T
KF717-01	TOYOTA	9 3/8	1 1/8	21T
KF718-01	TOYOTA TRUCK	9 1/4	1 1/8	21T
KF718-02	TOYOTA	9 1/4	1 1/8	21T
KF718-03	TOYOTA	9 5/16	1 1/8	21T
KF720-03	TOYOTA	9 1/8	1 1/8	21T
KF727-01	NISSAN / DATSUN	8 1/2	1	24T
KF728-01	HYUNDAI	8 7/8	7/8	20T
KF729-01	NISSAN / DATSUN	9 7/8	1	24T
KF735-01	CHRYSLER	8 7/8	7/8	20T
KF738-01	SUBARU	8 7/8	1	24T
KF738-02	SUBARU	8 7/8	1	24T
KF738-03	SUBARU	8 7/8	1	24T

© 2014 ZF North American Operations, Inc. All Rights Reserved. No portion of this work may be reproduced or copied by any means without the prior approval of ZF North American Operations, Inc.

CLUTCH KITS

PART #	MAKE	O.D.	I.D.	TEETH
KF738-04	SUBARU	8 7/8	1	24T
KF739-01	TOYOTA TRUCK	10 3/4	1 3/32	21T
KF748-01	PONTIAC	7 1/2	7/8	20T
KF749-01	TOYOTA	8 7/8	1 1/8	21T
KF750-01	DAIHATSU	6 3/4	7/8	20T
KF754-01	NISSAN / DATSUN	8 7/8	1	24T
KF759-02	KIA	7 7/8	7/8	20T
KF764-01	VOLKSWAGEN	8 1/4	13/16	24T
KF765-01	DAIHATSU	7 1/2	7/8	20T
KF766-01	DAIHATSU	7 7/8	7/8	20T
KF770-01	AUDI	9	15/16	23T
KF771-01	AUDI	9	15/16	23T
KF771-02	AUDI	9 1/2	15/16	23T
KF772-01	AUDI	9 1/2	13/16	24T
KF775-01	BMW	9	1 1/8	10T
KF776-01	BMW	9 1/2	1 1/8	10T
KF778-01	BMW	9 1/2	1 1/8	10T

PART #	MAKE	O.D.	I.D.	TEETH
KF778-02	BMW	9 1/2	1 1/8	10T
KF780-01	PEUGEOT	7 7/8	13/16	18T
KF781-01	PEUGEOT	7 7/8	13/16	18T
KF785-02	VOLKSWAGEN	8 1/4	13/16	24T
KF785-03	VOLKSWAGEN	8 1/4	13/16	24T
KF790-01	HONDA	8 5/8	1 1/32	24T
KF791-01	ACURA	9 1/2	1 1/32	24T
KF793-01	PORSCHE	9 7/16	1 1/32	23T
KF793-02	PORSCHE	9 7/16	1 1/32	23T
PC0048-01	FORD	10 1/2	1 1/16	10T
PC1675-21	CHEVROLET	10 1/2	1 1/8	26T
PC1877-02	GMC TRUCK	11	1 1/8	10T
PC200-01	PORSCHE	8 7/8	7/8	20T
PC70131-01	CHRYSLER	9	15/16	17T
SK70405-1	CHEVROLET	9 7/16	1	14T
SK70435-1	PONTIAC	9 1/2	1	23T
SK70440-1	TOYOTA TRUCK	9 7/8	1 1/8	21T

© 2014 ZF North American Operations, Inc. All Rights Reserved. No portion of this work may be reproduced or copied by any means without the prior approval of ZF North American Operations, Inc.

CLUTCH COMPONENTS

MAKE	MODEL	YEAR	CYL	LITER	COVER	DISC	RELEASER
MERCEDES BENZ	180	63-60	4	1.9	1881 059 208	SD140	*
MERCEDES BENZ	180D	61-54	4	1.8	1881 059 208	SD140	*
MERCEDES BENZ	190DC	65-63	4	2.0	1881 059 208	SD140	*
MERCEDES BENZ	190SL	63-60	4	1.9	1881 059 208	SD140	*
MERCEDES BENZ	219	59-57	6	2.2	1881 059 208	SD140	*
MERCEDES BENZ	219	57-56	6	2.2	1881 059 208	SD140	*
MERCEDES BENZ	220S	59-57	6	2.2	1881 059 208	SD140	*
MERCEDES BENZ	280S	71-68	6	2.8	SC675	SD150	*
MERCEDES BENZ	280SE	71-68	6	2.8	SC675	SD150	*
MERCEDES BENZ	280SEC	70-68	6	2.8	SC675	SD150	*
MERCEDES BENZ	280SEL	71-68	6	2.8	SC675	SD150	*
MERCEDES BENZ	280SL	71-68	6	2.8	SC675	SD150	*
PORSCHE	356B	62-60	4	1.6	SC179	*	*
PORSCHE	356C	65-64	4	1.6	SC190	*	*
PORSCHE	356SC	65-64	4	1.6	SC190	*	*
PORSCHE	911	74	6	2.7	*	SD197	*

CLUTCH FORKS

PART #	MAKE
SF1000	GENERAL MOTORS
SF1001	GENERAL MOTORS
SF1008	GENERAL MOTORS
SF1012	CHRYSLER
SF1013	GENERAL MOTORS
SF1016	CHRYSLER
SF1021	GENERAL MOTORS
SF1041	GENERAL MOTORS
SF1045	GENERAL MOTORS

© 2014 ZF North American Operations, Inc. All Rights Reserved. No portion of this work may be reproduced or copied by any means without the prior approval of ZF North American Operations, Inc.

SACHS

CLUTCH FLYWHEELS

PART #	MAKE
DMF91106	PORSCHE
DMF91108	BMW
DMF91109	PORSCHE
DMF91110	BMW
DMF91111	BMW
DMF91112	PORSCHE
DMF91114	JEEP
DMF91115	AUDI
DMF91117	BMW
DMF91118	HYUNDAI
DMF91119	AUDI
DMF91120	PORSCHE
DMF91121	PORSCHE
DMF91122	BMW
DMF91123	AUDI
DMF91126	AUDI
DMF91127	BMW
DMF91128	GMC TRUCK
DMF91129	HYUNDAI
DMF91130	FORD
DMF91132	CADILLAC
DMF91133	BMW
DMF91135	BMW
DMF91136	BMW
DMF91137	BMW
DMF91138	BMW
DMF91139	MINI
DMF91140	NISSAN / DATSUN
DMF91141	PORSCHE
DMF91142	VOLKSWAGEN
DMF91145	VOLKSWAGEN
DMF91148	VOLKSWAGEN
DMF91150	HONDA
DMF91151	SUBARU
DMF91152	FORD
DMF91153	TOYOTA
DMF91154	FORD TRUCK
DMF91156	DODGE TRUCK
DMF91158	AUDI
DMF91159	VOLKSWAGEN
DMF91160	CHRYSLER
DMF91161	SAAB

PART #	MAKE
DMF91162	AUDI
DMF91164	MINI
DMF91165	MINI
DMF91166	VOLKSWAGEN
DMF91170	JEEP
DMF91172	FORD
DMF91173	BMW
DMF91174	MINI
DMF91175	BMW
DMF91177	VOLVO
DMF91178	VOLKSWAGEN
DMF91179	BUICK
DMF91180	VOLKSWAGEN
DMF91181	VOLKSWAGEN
DMF91182	HYUNDAI
DMF91183	MERCEDES BENZ
DMF91184	MERCEDES BENZ
DMF91185	NISSAN / DATSUN
DMF91186	VOLVO
NFW1000	FORD
NFW1004	CHEVROLET
NFW1006	BUICK
NFW1007	CHEVROLET
NFW1008	GMC TRUCK
NFW1009	GMC TRUCK
NFW1017	CHEVROLET
NFW1021	GEO
NFW1023	GMC TRUCK
NFW1031	GMC TRUCK
NFW1036	GMC TRUCK
NFW1040	GMC TRUCK
NFW1041	GMC TRUCK
NFW1043	GMC TRUCK
NFW1044	GMC TRUCK
NFW1046	GMC TRUCK
NFW1049	GMC TRUCK
NFW1050	GMC TRUCK
NFW1051	GMC TRUCK
NFW1055	GMC TRUCK
NFW1067	FORD TRUCK
NFW1068	FORD TRUCK
NFW1069	FORD TRUCK

© 2014 ZF North American Operations, Inc. All Rights Reserved. No portion of this work may be reproduced or copied by any means without the prior approval of ZF North American Operations, Inc.

CLUTCH FLYWHEELS

PART #	MAKE
NFW1091	GMC MEDIUM TRUCK
NFW1100	FORD
NFW1101	FORD
NFW1102	FORD TRUCK
NFW1104	FORD
NFW1105	FORD
NFW1109	FORD TRUCK
NFW1115	FORD TRUCK
NFW1118	FORD TRUCK
NFW1120	FORD
NFW1125	FORD
NFW1128	FORD TRUCK
NFW1129	FORD TRUCK
NFW1130	FORD TRUCK
NFW1143	FORD
NFW1145	FORD TRUCK
NFW1146	FORD TRUCK
NFW1147	FORD TRUCK
NFW1150	FORD
NFW1152	FORD TRUCK
NFW1171	FORD TRUCK
NFW1175	FORD
NFW1182	FORD TRUCK
NFW1190	FORD TRUCK
NFW1204	DODGE TRUCK
NFW1217	DODGE TRUCK
NFW1900	SATURN
NFW2001	JEEP
NFW2003	JEEP
NFW2005	JEEP
NFW2006	JEEP
NFW2100	ACURA
NFW2102	ACURA
NFW2108	ACURA
NFW3302	CHEVROLET
NFW3602	HONDA
NFW3606	HONDA
NFW3607	HONDA
NFW3611	HONDA
NFW3614	HONDA
NFW3615	HONDA
NFW3621	HONDA TRUCK

PART #	MAKE
NFW4001	HONDA TRUCK
NFW4004	ISUZU
NFW4702	FORD
NFW4713	KIA
NFW5102	CHRYSLER
NFW5105	PLYMOUTH
NFW5106	HYUNDAI
NFW5134	DODGE
NFW5301	NISSAN / DATSUN
NFW5305	NISSAN / DATSUN
NFW5307	NISSAN / DATSUN
NFW5314	NISSAN / DATSUN
NFW5316	NISSAN / DATSUN
NFW5318	FORD TRUCK
NFW6605	SUBARU
NFW6800	SUZUKI TRUCK
NFW6801	PONTIAC
NFW6906	TOYOTA
NFW6907	TOYOTA
NFW6909	TOYOTA
NFW6911	TOYOTA
NFW6915	TOYOTA TRUCK & VAN
NFW6921	TOYOTA TRUCK & VAN
NFW6924	TOYOTA
NFW6926	CHEVROLET
NFW6931	TOYOTA
NFW6938	TOYOTA TRUCK & VAN
NFW6939	TOYOTA TRUCK & VAN
NFW7201	VOLKSWAGEN
NFW7206	VOLKSWAGEN
NFW7221	DODGE TRUCK
NFW7223	DODGE TRUCK
NFW7224	CHEVROLET
NFW7225	DODGE TRUCK
NFW7227	GMC TRUCK
NFW9121	FORD TRUCK
NFW9122	TOYOTA
NFW9123	CHEVROLET
NFW9124	HYUNDAI
NFW9125	FORD TRUCK
NFW9126	FORD
NFW9127	DODGE TRUCK

© 2014 ZF North American Operations, Inc. All Rights Reserved. No portion of this work may be reproduced or copied by any means without the prior approval of ZF North American Operations, Inc.

CLUTCH FLYWHEELS

PART #	MAKE
NFW9128	FORD TRUCK
NFW9129	HONDA
NFW9130	TOYOTA TRUCK & VAN
NFW9131	TOYOTA TRUCK & VAN
NFW9132	TOYOTA
NFW9133	TOYOTA
NFW9134	FORD

PART #	MAKE
NFW9135	HONDA
NFW9136	JEEP
NFW9137	TOYOTA
NFW9138	HYUNDAI
NFW9140	HONDA
NFW9146	HYUNDAI
NFW9150	CHEVROLET

© 2014 ZF North American Operations, Inc. All Rights Reserved. No portion of this work may be reproduced or copied by any means without the prior approval of ZF North American Operations, Inc.

MASTER CYLINDER

PART #	MAKE
SH5001	TOYOTA
SH5002	MAZDA TRUCK
SH5003	GMC TRUCK
SH5004	NISSAN TRUCK
SH5005	NISSAN / DATSUN
SH5006	JEEP
SH5007	FORD TRUCK
SH5008	CHEVROLET
SH5009	JEEP
SH5010	FORD
SH5013	JEEP
SH5014	FORD TRUCK
SH5016	FORD TRUCK
SH5017	MAZDA
SH5018	MAZDA
SH5019	HONDA
SH5020	GMC TRUCK
SH5021	JEEP
SH5022	JEEP
SH5023	FORD TRUCK
SH5024	SAAB
SH5025	HONDA TRUCK
SH5027	HONDA
SH5028	TOYOTA
SH5029	TOYOTA
SH5030	TOYOTA TRUCK
SH5031	TOYOTA
SH5032	GMC TRUCK
SH5033	JEEP
SH5034	ISUZU TRUCK
SH5035	HONDA
SH5036	HONDA
SH5037	TOYOTA
SH5039	CHEVROLET
SH5040	CHEVROLET
SH5042	CHEVROLET
SH5044	CHEVROLET
SH5045	CHEVROLET
SH5048	GMC TRUCK
SH5049	GMC TRUCK
SH5051	CHRYSLER
SH5052	MITSUBISHI

PART #	MAKE
SH5054	FORD
SH5056	FORD
SH5059	FORD TRUCK
SH5060	FORD TRUCK
SH5061	FORD TRUCK
SH5062	FORD TRUCK
SH5063	FORD TRUCK
SH5064	FORD TRUCK
SH5068	HYUNDAI
SH5071	TOYOTA
SH5073	MAZDA
SH5074	MAZDA
SH5075	MAZDA
SH5076	MAZDA
SH5077	MAZDA
SH5080	DODGE
SH5082	NISSAN TRUCK
SH5083	NISSAN / DATSUN
SH5084	NISSAN / DATSUN
SH5087	PONTIAC
SH5088	SATURN
SH5089	TOYOTA
SH5090	TOYOTA
SH5092	TOYOTA
SH5094	PONTIAC
SH5097	CHEVROLET
SH5099	CHEVROLET
SH5102	FORD TRUCK
SH5103	BMW
SH5109	CHEVROLET
SH5112	ACURA
SH5114	MITSUBISHI
SH5115	MITSUBISHI
SH5116	CHRYSLER
SH5119	TOYOTA
SH5120	TOYOTA
SH5124	AUDI
SH5125	TOYOTA
SH5126	TOYOTA
SH5127	NISSAN / DATSUN
SH5128	NISSAN TRUCK
SH5129	NISSAN / DATSUN

© 2014 ZF North American Operations, Inc. All Rights Reserved. No portion of this work may be reproduced or copied by any means without the prior approval of ZF North American Operations, Inc.

SACHS

MASTER CYLINDER

PART #	MAKE
SH5131	NISSAN TRUCK
SH5132	MAZDA
SH5133	MAZDA
SH5134	MAZDA
SH5135	FORD TRUCK
SH5136	FORD TRUCK
SH5137	FORD TRUCK
SH5139	FORD TRUCK
SH5140	DODGE TRUCK
SH5141	DODGE TRUCK
SH5142	DODGE TRUCK
SH5143	DODGE TRUCK
SH5144	DODGE TRUCK
SH5145	DODGE TRUCK
SH5146	DODGE TRUCK
SH5147	CHEVROLET
SH5148	CHEVROLET
SH5150	HYUNDAI
SH5154	DODGE TRUCK
SH5155	DODGE TRUCK
SH5156	TOYOTA
SH5157	NISSAN / DATSUN
SH5158	TOYOTA
SH5159	AUDI
SH5161	AUDI
SH5162	AUDI
SH5165	AUDI
SH5169	FORD TRUCK
SH5170	GMC TRUCK
SH5171	GMC TRUCK
SH5172	FORD TRUCK
SH5173	DODGE
SH5176	JEEP
SH5177	JEEP
SH5179	GMC TRUCK
SH5180	CHEVROLET
SH5181	GMC TRUCK
SH5182	CHEVROLET
SH5183	DODGE TRUCK
SH5184	FORD TRUCK
SH5187	HONDA
SH5190	SATURN

PART #	MAKE
SH5191	CHRYSLER
SH5192	GMC TRUCK
SH5193	FORD TRUCK
SH5194	DODGE
SH5195	FORD TRUCK
SH5196	PORSCHE
SH5199	HONDA
SH5200	BMW
SH5201	BMW
SH5203	CADILLAC
SH5204	CHEVROLET
SH5206	SUZUKI
SH5209	MITSUBISHI
SH5210	CHRYSLER
SH5211	CHRYSLER
SH5212	DAEWOO
SH5215	DODGE
SH5216	CHRYSLER
SH5217	CHRYSLER
SH5219	FORD
SH5222	HONDA
SH5223	HONDA
SH5225	HONDA
SH5226	HONDA TRUCK
SH5228	HYUNDAI
SH5229	HYUNDAI
SH5231	HYUNDAI
SH5232	HYUNDAI
SH5233	HYUNDAI TRUCK
SH5237	JEEP
SH5239	KIA TRUCK
SH5241	JAGUAR
SH5242	FORD
SH5244	MERCEDES BENZ
SH5246	MINI
SH5247	MITSUBISHI
SH5249	NISSAN / DATSUN
SH5250	NISSAN / DATSUN
SH5251	NISSAN / DATSUN
SH5252	NISSAN TRUCK
SH5253	NISSAN TRUCK
SH5255	SAAB

© 2014 ZF North American Operations, Inc. All Rights Reserved. No portion of this work may be reproduced or copied by any means without the prior approval of ZF North American Operations, Inc.

MASTER CYLINDER

PART #	MAKE
SH5256	CHEVROLET TRUCK
SH5257	SATURN
SH5258	SUBARU
SH5260	TOYOTA
SH5261	TOYOTA
SH5262	TOYOTA TRUCK
SH5266	BMW
SH5268	AUDI
SH5269	AUDI
SH5271	MAZDA
SH5273	MAZDA
SH5280	SUBARU
SH5301	CADILLAC
SH5303	CHEVROLET
SH5304	HUMMER
SH5310	FORD
SH5316	HYUNDAI
SH5317	HYUNDAI
SH5319	HYUNDAI TRUCK
SH5320	JEEP
SH5324	MITSUBISHI
SH5325	NISSAN TRUCK
SH5326	NISSAN TRUCK
SH5331	SUBARU
SH5332	SUZUKI
SH5333	SUZUKI
SH5335	TOYOTA TRUCK
SH5340	KIA TRUCK
SH5344	PONTIAC
SH5348	CHEVROLET
SH5349	CHRYSLER
SH5350	TOYOTA TRUCK
SH5353	NISSAN / DATSUN
SH5361	NISSAN / DATSUN
SH5371	TOYOTA TRUCK
SH5374	JEEP
SH5375	TOYOTA TRUCK
SH5376	CHEVROLET TRUCK
SH5377	MITSUBISHI TRUCK
SH5379	GMC TRUCK
SH5383	MG
SH5386	KIA

PART #	MAKE
SH5388	VOLKSWAGEN TRUCK
SH5396	VOLKSWAGEN
SH5397	ISUZU MEDIUM TRUCK
SH5401	FORD TRUCK
SH5403	TOYOTA
SH5405	AUDI
SH5407	GMC TRUCK
SH5411	TOYOTA TRUCK
SH5412	VOLKSWAGEN
SH5413	PORSCHE
SH5414	VOLVO
SH5415	BMW
SH5419	CHEVROLET
SH5422	CHEVROLET
SH5423	OLDSMOBILE
SH5428	HYUNDAI
SH5431	DODGE TRUCK
SH5434	HYUNDAI
SH5443	VOLKSWAGEN
SH5449	ISUZU TRUCK
SH5450	MAZDA
SH5457	SUBARU
SH5461	TOYOTA TRUCK
SH5463	TOYOTA TRUCK
SH5465	VOLKSWAGEN TRUCK
SH5466	FIAT
SH5470	SAAB
SH5471	SAAB
SH5475	VOLVO
SH5478	BMW
SH5479	DODGE TRUCK
SH5486	FORD TRUCK
SH5489	HONDA
SH5490	MAZDA
SH5491	CHEVROLET TRUCK
SH5494	ISUZU TRUCK
SH5495	AUDI
SH5496	GMC TRUCK
SH5497	TOYOTA
SH5498	TOYOTA
SH5499	NISSAN / DATSUN
SH5501	JEEP

© 2014 ZF North American Operations, Inc. All Rights Reserved. No portion of this work may be reproduced or copied by any means without the prior approval of ZF North American Operations, Inc.

MASTER CYLINDER

PART #	MAKE
SH5508	HYUNDAI TRUCK
SH5509	HYUNDAI
SH5510	HYUNDAI
SH5516	KIA
SH5517	SUBARU
SH5518	VOLVO
SH5519	MITSUBISHI
SH5522	DODGE
SH5523	SATURN
SH5524	AUDI
SH5525	MAZDA
SH5526	SUZUKI TRUCK
SH5527	FORD
SH5528	KIA

PART #	MAKE
SH5529	SUBARU
SH5530	SUBARU
SH5531	SUBARU
SH5532	SUBARU
SH5533	VOLKSWAGEN
SH5534	VOLVO
SH5535	VOLVO
SH5538	CHEVROLET
SH5539	GMC TRUCK
SH5544	DODGE
SH5546	CHEVROLET TRUCK
SH5549	TOYOTA
SH5550	MERCEDES BENZ
SH5551	NISSAN / DATSUN

© 2014 ZF North American Operations, Inc. All Rights Reserved. No portion of this work may be reproduced or copied by any means without the prior approval of ZF North American Operations, Inc.

SLAVE CYLINDER

PART #	MAKE
SH6002	MAZDA TRUCK
SH6003	TOYOTA
SH6004	GMC TRUCK
SH6005	FORD
SH6006	TOYOTA
SH6010	BMW
SH6011	ISUZU TRUCK
SH6012	NISSAN / DATSUN
SH6013	HYUNDAI
SH6014	TOYOTA
SH6015	PONTIAC
SH6016	JEEP
SH6017	HONDA
SH6018	FORD
SH6019	MAZDA
SH6020	MAZDA TRUCK
SH6021	HONDA
SH6022	TOYOTA
SH6025	VOLKSWAGEN TRUCK
SH6026	NISSAN TRUCK
SH6027	TOYOTA
SH6028	GMC TRUCK
SH6029	FORD TRUCK
SH6030	GMC TRUCK
SH6031	ISUZU
SH6032	ISUZU
SH6033	ISUZU TRUCK
SH6034	HONDA
SH6035	HONDA
SH6036	TOYOTA
SH6037	CHEVROLET
SH6038	TOYOTA
SH6039	TOYOTA
SH6040	CHEVROLET
SH6041	CHEVROLET
SH6042	GMC TRUCK
SH6043	GMC TRUCK
SH6044	GMC TRUCK
SH6045	CHRYSLER
SH6046	DODGE
SH6048	DODGE
SH6049	DODGE

PART #	MAKE
SH6050	FORD
SH6051	FORD
SH6052	FORD
SH6053	FORD
SH6054	FORD
SH6055	FORD TRUCK
SH6056	FORD TRUCK
SH6057	FORD TRUCK
SH6061	JEEP
SH6062	MAZDA
SH6063	MAZDA
SH6064	MAZDA
SH6066	MAZDA
SH6067	MAZDA
SH6070	MAZDA
SH6071	MAZDA TRUCK
SH6072	MAZDA
SH6074	DODGE TRUCK
SH6075	NISSAN / DATSUN
SH6076	NISSAN / DATSUN
SH6077	NISSAN / DATSUN
SH6080	SATURN
SH6081	TOYOTA
SH6082	TOYOTA
SH6083	TOYOTA
SH6086	TOYOTA TRUCK
SH6088	NISSAN TRUCK
SH6089	GMC TRUCK
SH6091	CHEVROLET
SH6092	GMC TRUCK
SH6107	ACURA
SH6110	ACURA
SH6111	CHRYSLER
SH6112	DODGE
SH6114	TOYOTA
SH6115	TOYOTA
SH6116	PONTIAC
SH6117	TOYOTA TRUCK
SH6118	TOYOTA TRUCK
SH6119	NISSAN TRUCK
SH6120	NISSAN TRUCK
SH6121	NISSAN TRUCK

© 2014 ZF North American Operations, Inc. All Rights Reserved. No portion of this work may be reproduced or copied by any means without the prior approval of ZF North American Operations, Inc.

SACHS

SLAVE CYLINDER

PART #	MAKE
SH6124	MAZDA TRUCK
SH6125	FORD TRUCK
SH6127	DODGE TRUCK
SH6128	DODGE TRUCK
SH6129	DODGE TRUCK
SH6130	DODGE TRUCK
SH6131	DODGE TRUCK
SH6132	CHEVROLET
SH6134	DODGE TRUCK
SH6138	MITSUBISHI
SH6140	AUDI
SH6141	AUDI
SH6142	AUDI
SH6144	AUDI
SH6152	CHEVROLET
SH6155	FORD TRUCK
SH6156	FORD TRUCK
SH6157	FORD TRUCK
SH6158	CHRYSLER
SH6160	HONDA
SH6162	GMC TRUCK
SH6164	FORD TRUCK
SH6165	NISSAN / DATSUN
SH6167	HONDA
SH6168	BMW
SH6169	BMW
SH6172	CHEVROLET
SH6175	CHRYSLER
SH6176	CHRYSLER
SH6177	DAEWOO
SH6179	CHRYSLER
SH6180	DODGE
SH6181	FORD
SH6185	HONDA
SH6187	HONDA
SH6188	HONDA TRUCK
SH6189	HYUNDAI
SH6190	HYUNDAI
SH6196	PORSCHE
SH6200	KIA
SH6201	KIA TRUCK
SH6203	MAZDA

PART #	MAKE
SH6204	TOYOTA TRUCK
SH6206	MINI
SH6208	MITSUBISHI
SH6210	NISSAN / DATSUN
SH6212	NISSAN / DATSUN
SH6214	NISSAN TRUCK
SH6216	TOYOTA
SH6218	SUBARU
SH6219	SUBARU
SH6220	CHEVROLET TRUCK
SH6221	TOYOTA
SH6222	TOYOTA
SH6223	TOYOTA
SH6226	ISUZU TRUCK
SH6228	TOYOTA TRUCK
SH6230	JEEP
SH6237	MAZDA
SH6238	MAZDA
SH6304	NISSAN / DATSUN
SH6305	MINI
SH6306	NISSAN TRUCK
SH6307	NISSAN TRUCK
SH6313	SUBARU
SH6316	TOYOTA TRUCK
SH6319	SUZUKI
SH6320	TOYOTA TRUCK
SH6321	VOLKSWAGEN
SH6325	AUDI
SH6327	DODGE TRUCK
SH6328	DODGE TRUCK
SH6329	DODGE TRUCK
SH6330	DODGE TRUCK
SH6331	DODGE TRUCK
SH6339	EAGLE
SH6342	TOYOTA TRUCK
SH6343	CHEVROLET
SH6349	BMW
SH6355	AMERICAN MOTORS
SH6358	GMC TRUCK
SH6359	TOYOTA TRUCK
SH6362	MG
SH6364	JEEP

© 2014 ZF North American Operations, Inc. All Rights Reserved. No portion of this work may be reproduced or copied by any means without the prior approval of ZF North American Operations, Inc.

SLAVE CYLINDER

PART #	MAKE
SH6367	CHEVROLET TRUCK
SH6369	TOYOTA
SH6371	NISSAN / DATSUN
SH6373	HONDA TRUCK
SH6379	NISSAN / DATSUN
SH6384	MAZDA
SH6388	GMC MEDIUM TRUCK
SH6390	MITSUBISHI TRUCK
SH6393	TOYOTA TRUCK
SH6394	TOYOTA
SH6395	SAAB
SH6396	VOLVO
SH6397	VOLVO
SH6400	AUDI
SH6413	GMC TRUCK
SH6415	MITSUBISHI TRUCK
SH6417	FORD TRUCK
SH6421	MAZDA
SH6422	MAZDA
SH6425	PORSCHE
SH6426	SUBARU
SH6427	TOYOTA TRUCK
SH6428	TOYOTA
SH6429	TOYOTA TRUCK
SH6430	TOYOTA
SH6431	TOYOTA
SH6432	VOLKSWAGEN

PART #	MAKE
SH6438	VOLVO
SH6454	NISSAN / DATSUN
SH6455	JEEP
SH6457	NISSAN / DATSUN
SH6463	MAZDA
SH6465	CHEVROLET
SH6468	MERCEDES BENZ
SH6469	JEEP
SH6470	NISSAN / DATSUN
SH6471	SMART
SH6472	PORSCHE
SH6474	TOYOTA
SH6503	HYUNDAI
SH6505	BMW
SH6507	PORSCHE
SH6512	ISUZU TRUCK
SH6513	HONDA
SH6514	AUDI
SH6515	PORSCHE
SH6516	TOYOTA
SH6517	TOYOTA
SH6518	NISSAN / DATSUN
SH6519	MINI
SH6520	JEEP
SH6525	MAZDA
SH6526	HONDA
SH6529	MINI

© 2014 ZF North American Operations, Inc. All Rights Reserved. No portion of this work may be reproduced or copied by any means without the prior approval of ZF North American Operations, Inc.

SACHS

CONCENTRIC SLAVE CYLINDER

PART #	MAKE
SB60051	CHRYSLER
SB60052	CADILLAC
SB60053	JEEP
SB60054	JEEP
SB60082	CHEVROLET
SB60092	FORD
SB60093	FORD
SB60118	SAAB
SB60119	VOLVO
SB60126	AUDI
SB60138	JAGUAR
SB60139	CHEVROLET
SB60140	SATURN
SB60149	GMC TRUCK
SB60193	GMC TRUCK
SB60197	CADILLAC
SB60203	CHEVROLET
SB60210	CHEVROLET
SB60211	CHEVROLET
SB60215	CHEVROLET
SB60221	VOLVO
SB60223	VOLVO
SB60224	VOLVO
SB60225	FORD
SB60244	SAAB
SB60245	SAAB
SB60249	FORD TRUCK
SB60253	HYUNDAI
SB60254	CHEVROLET
SB60255	BUICK
SB60299	CHRYSLER
SB60300	DODGE
SB60301	NISSAN / DATSUN
SB60302	NISSAN / DATSUN
SB60307	SUZUKI
SB60308	FORD

PART #	MAKE
SB60309	FORD
SB60310	CHEVROLET
SB60311	PONTIAC
SB60312	SUZUKI TRUCK
SB60313	SUZUKI
SB60314	DODGE
SB60315	CHEVROLET
SB60316	HYUNDAI
SB60317	FORD
SB60319	FORD
SB60322	FORD
SB60323	NISSAN / DATSUN
SH6001	FORD
SH6001WB	FORD
SH6023	FORD TRUCK
SH6023WB	FORD TRUCK
SH6024	FORD TRUCK
SH6024WB	FORD TRUCK
SH6133	CHEVROLET
SH6133WB	CHEVROLET
SH6151	DODGE
SH6151WB	DODGE
SH6154	CHEVROLET
SH6154WB	CHEVROLET
SH6161	FORD TRUCK
SH6161WB	FORD TRUCK
SH6163	GMC TRUCK
SH6163WB	GMC TRUCK
SH6332	DODGE TRUCK
SH6344	GMC TRUCK
SH6414	PONTIAC
SH6443	GMC TRUCK
SH6443WB	GMC TRUCK
SN1750	JEEP
SN1751	JEEP

© 2014 ZF North American Operations, Inc. All Rights Reserved. No portion of this work may be reproduced or copied by any means without the prior approval of ZF North American Operations, Inc.

PRE-FILLED HYDRAULICS

PART #	MAKE
SPH001	GMC TRUCK
SPH002	CHEVROLET
SPH003	DODGE TRUCK
SPH004	DODGE TRUCK
SPH005	FORD TRUCK
SPH007	FORD TRUCK
SPH008	GMC TRUCK
SPH009	JEEP
SPH010	JEEP
SPH011	JEEP
SPH012	JEEP
SPH014	GMC TRUCK
SPH015	FORD TRUCK
SPH016	CHEVROLET
SPH020	CHEVROLET
SPH022	SATURN
SPH023	SATURN
SPH025	DODGE TRUCK
SPH026	DODGE TRUCK
SPH028	DODGE TRUCK
SPH029	DODGE TRUCK
SPH030	DODGE TRUCK
SPH031	DODGE TRUCK
SPH032	FORD TRUCK

PART #	MAKE
SPH043	JEEP
SPH044	GMC TRUCK
SPH048	JEEP
SPH061	DODGE TRUCK
SPH062	JEEP
SPH064	FORD TRUCK
SPH065	JEEP
SPH066	JEEP
SPH067	JEEP
SPH068	FORD TRUCK
SPH069	FORD TRUCK
SPM001	FORD TRUCK
SPM003	FORD TRUCK
SPM004	FORD TRUCK
SPM005	FORD TRUCK
SPM006	FORD TRUCK
SPM007	FORD TRUCK
SPM008	FORD TRUCK
SPM009	FORD TRUCK
SPM010	FORD TRUCK
SPM011	FORD TRUCK
SPM012	FORD TRUCK
SPM014	GMC TRUCK

© 2014 ZF North American Operations, Inc. All Rights Reserved. No portion of this work may be reproduced or copied by any means without the prior approval of ZF North American Operations, Inc.

Application Notes

Note Number	Note Description
1	Replace as set only
2	Lever type
3	Cover with releaser
9	Cam hub disc
10	Modular clutch - includes flywheel, cover and disc
11	Original is 9" unit
12	Will retro-fit 1989 with a flywheel change
13	If clutch & flywheel have been replaced by the dealer, use the 91-95 unit.
14	Rigid hub disc
18	Transaxle type can be identified by the F13/F16 code found on the case behind the gear shift cover.
23	For slave cylinder (to mid 1985) with an o-ring on the outer diameter of the piston, use releaser #SN3837. For new style salve cylinder without an o-ring on the outer diameter of the piston, use releaser #SN3785.
26	1290cc engine with 28mm thick flywheel
27	See Technical Bulletin #B1, page 181
28	See Technical Bulletin #B2, page 181
29	See Technical Bulletin #B3, page 182
30	See Technical Bulletin #B4, page 182
31	See Technical Bulletin #B5, page 182
32	See Technical Bulletin #B6, page 182
33	See Technical Bulletin #B7, page 183
34	See Technical Bulletin #B8, page 183
35	See Technical Bulletin #B9, page 183
36	See Technical Bulletin #B10, page 183
37	See Technical Bulletin #B11, page 184
38	See Technical Bulletin #B12, page 184
39	See Technical Bulletin #B13, page 184
40	Kit contains a non-predamper disc which will replace both predamper and non-predamper original equipment discs.
41	Dual mass flywheel available
43	See Technical Bulletin #B14, page 184
44	See Technical Bulletin #B15, page 184
45	See Technical Bulletin #B16, page 185
46	See Technical Bulletin #B17, page 185
47	See Technical Bulletin #B18, page 185

Note Number	Note Description
48	See Technical Bulletin #B19, page 185
49	We strongly recommend using a new mounting bolt set, part # 3096 005 000, when replacing the clutch on VW Cabriolet, Golf, Jetta, Pickup, Rabbit, and Scirocco models.
52	See Technical Bulletin #B22, page 185
53	See Technical Bulletin #B23, page 186
54	See Technical Bulletin #B24, page 186
55	See Technical Bulletin #B25, page 186
56	See Technical Bulletin #B26, page 186
57	To identify the GVW, the 4th digit of the VIN is: A-G under 8500 lbs. H-Z over 8500 lbs.
59	Required mounting of 9, 7mm bolts
60	See Technical Bulletin #B30, page 188
61	See Technical Bulletin #B31, page 188
62	See Technical Bulletin #B33, page 188
63	See Technical Bulletin #B34, page 189
64	See Technical Bulletin #B35, page 189
65	See Technical Bulletin #B36, page 189
66	See Technical Bulletin #B38, page 190
67	See Technical Bulletin #B39, page 190
69	See Technical Bulletin #B41, page 190
70	See Technical Bulletin #B42, page 191
71	See Technical Bulletin #B43, page 191
72	See Technical Bulletin #B44, page 191
73	Clutch kits with hydraulic release systems see Technical Bulletin #B27, page 187
74	Hydraulic slave cylinders without bleed screws see Technical Bulletin #B29, page 187
75	Clutch kits with cam hub vs. non-cam hub discs see Technical Bulletin #B32, page 188
76	Clutch systems with hydraulic release systems see Technical Bulletin #B37, page 190
77	See Technical Bulletin #B45, page 191
78	See Technical Bulletin #B46, page 192
79	See Technical Bulletin #B47, page 192

© 2014 ZF North American Operations, Inc. All Rights Reserved. No portion of this work may be reproduced or copied by any means without the prior approval of ZF North American Operations, Inc.

Technical Bulletin B1

Affected Vehicles: GMC and Isuzu front wheel drive, 4 cylinder with Isuzu 5 speed transmission
Part Number: SN1744
Kit Numbers: K0034-02, K0034-03, K0044-01, K0074-01, K0110-01, K70047-01, K70083-01
Problem: Possible releaser retaining clip differences
Solution: Releaser retaining clip, use GM part #94251599

The kits listed above are supplied with the original equipment style clutch releaser and OEM-style retaining clip. If a non-OEM style clutch releaser has been previously installed on the vehicle, it will be necessary to remove the releaser and retaining clip, and install the OE components.

Non-OE Style

OE Style

Technical Bulletin B2

Affected Vehicles: General Motors rear wheel drive with stamped clutch forks
Subject: Correct installation of clutch releaser and fork assembly

When the clutch releaser is installed on most General Motors forks it is possible to install it incorrectly, causing failure to release. The spring-steel fork retaining clips and the front face of the fork must be positioned between the flanges of the releaser sleeve. Correctly installed, there will <u>not</u> be a gap between the fork and releaser. Incorrect installation will leave 5/16” gap from the fork to releaser.

Incorrect

Correct

© 2014 ZF North American Operations, Inc. All Rights Reserved. No portion of this work may be reproduced or copied by any means without the prior approval of ZF North American Operations, Inc.

Technical Bulletin B3

Affected Vehicles: General Motors front wheel drive with HM282 5 speed, 1987-1989 A, J, L cars
Kit Number: K0059-01
Problem: High clutch pedal effort, release system failure
Solution: Release system inspection and/or repair
Ref. Bulletin: GM Bulletin #89-298-7B, February 1990

During clutch installation it is required to inspect the release system carefully to prevent clutch failures. The following areas need inspection and repair as required:

1. Clutch fork shaft bushings or bearings: Inspect for wear or damage.
2. Release bearing support sleeve: Inspect for galling, damage or worn undersize. Replace with GM #8672128.
3. Clutch pedal assembly and hydraulic system: Inspect for loose fasteners, worn bushings or pivot pins.
4. Clutch fork shaft: Inspect alignment of shaft to the support sleeve and clutch releaser.
5. Clutch fork releaser contact pads: Inspect for wear or bends.

Please refer to GM Bulletin #89-298-7B and service manuals for complete release system inspection details, including releaser support sleeve replacement

Technical Bulletin B4

Affected Vehicles: 1984-1988 Pontiac Fiero
Kit Numbers: K0059-01, K1914-01
Problem: High clutch pedal effort, release system failure, clutch will not release
Solution: Release system inspection
Ref. Bulletin: GM Bulletin #87-7-55, September 1988

In order to correctly service these applications it is required to inspect the release system as outlined in the GM bulletin. The bulletin covers clutch wear and noise and refers to four specific areas to inspect.

1. Clutch pedal and pedal standoff bracket: Inspect for pedal deflection or bent components.
2. Clutch release fork: Inspect for cracked, bent, or deflecting release fork. Replacement with cast iron release fork is recommended.
3. Pedal and pedal return stop: Inspect for interference prohibiting complete pedal travel.
4. Hydraulic system: Inspect to be certain the system is completely bled of air.

Please refer to the GM Bulletin for complete details.

Technical Bulletin B5

Affected Vehicles: Volkswagen Golf, Jetta, Rabbit, Scirroco
Kits: All with 7 ½", 7 7/8", 8 ¼" diameter clutch assemblies
Subject: Correct orientation and installation of flywheel

For these applications the cover assembly is bolted to the crankshaft and then the flywheel is bolted to the cover assembly. The flywheel is "timed" to the cover by 2 roll pins. If the cover and flywheel are not oriented to each other during bolt up, one of the roll pins will not line up with a hole or notch in the cover stamping. This results in a deformed cover stamping and the clutch will not release. Prior to installing the flywheel check the orientation of the pins and mark the flywheel to line up correctly.

Technical Bulletin B6

Affected Vehicles: 1984-1995 Chevrolet/GMC S/T Series, 1994-1995 Chevrolet/GMC C/K Series
Problem: Squeaking clutch pedal, noise in bell housing
Solution: Installation of modified ball stud and grease fitting
Ref. Bulletin: GM Bulletin #91-197A-7C, November 1991

The above bulletin describes causes and corrections for a squeaking sound that goes away with very light pedal pressure. The noise is caused by the clutch fork squeaking on the pivot ball stud. A grease fitting can be installed in the bell housing along with a drilled ball stud to allow for periodic greasing of the fork to ball stud. The modification requires drilling a hole in the bell housing, a new ball stud, GM #15679715, and possible replacement of the release fork, GM #15704443. Please refer to the GM Bulletins #56-73-01 for S/T and #16-73-01 for C/K for complete details.

© 2014 ZF North American Operations, Inc. All Rights Reserved. No portion of this work may be reproduced or copied by any means without the prior approval of ZF North American Operations, Inc.

Technical Bulletin B7

Affected Vehicles: Porsche 911 Carrera 2/4 (89-), 911 Turbo (91-), 928 (87-)
Kit Numbers: K70021-01, K70021-02, K70022-01, K70023-01
Subject: Porsche 911 and 928 clutch releasers

A design change has been made to the guide tube and clutch releaser on the above-mentioned applications. The new version clutch releasers can be identified by the inside bore diameter of 32mm and by a polyamide insert that contacts the guide tube. The old version has a 34 mm inside bore diameter. Please note both new and old style releasers must be used with the appropriate guide tube. The new polyamide version requires no guide tube lubrication. The new guide tubes are available from Porsche dealers.

Technical Bulletin B8

Affected Vehicles: 1985-1987 Ford Ranger, Bronco II, Aerostar
Part Number: SN1738SA
Kit Numbers: K0047-05, K0047-05HD
Subject: Correct installation of releaser SN1738SA

If the vehicle being serviced is equipped with the original equipment two-piece releaser and metal piston, the installation of the new releaser supplied in the kits listed above requires that the metal piston be removed. The piston has a 2” outside diameter, a 1 7/16” inside diameter and is 25/32” in height. A magnet may be used to remove the piston. Removal or disassembly of the slave cylinder is not required.

One-Piece Releaser

Two-Piece Releaser

Technical Bulletin B9

Affected Vehicles: Ford Escort, EXP, Taurus, Tempo and Mercury Lynx, Sable, Topaz
Kit Numbers: K0036-03, K0122-01
Subject: SB60089 releaser and sleeve assembly

A new releaser and sleeve has been incorporated into each of the clutch kits listed for the affected Ford vehicles. The clutch releaser and sleeve kit is to be used on these vehicles because they may have experienced excessive bearing retainer or “quill” wear. Since the quill is aluminum and an integral part of the transmission case, it cannot be replaced separately.

Technical Bulletin B10

Affected Vehicles: 1989-90 GM F, J, L body
Problem: Difficult shift effort or gear clash
Solution: Replacement of clutch cover mounting bolts
Ref. Bulletin: GM Bulletin #90-302-7C, July 1990

Vehicles may experience reduced clutch disengagement due to the clutch cover-to-flywheel bolts working loose. GM specifies cover bolts and lock washers to be installed and torque to 20 N-m (14.7 lb ft.) plus 30° clockwise rotation. Please refer to the GM Bulletin for complete details.

© 2014 ZF North American Operations, Inc. All Rights Reserved. No portion of this work may be reproduced or copied by any means without the prior approval of ZF North American Operations, Inc.

Technical Bulletin B11

Affected Vehicles: 1982-83 GM S/T trucks with V6 engines
Problem: Clutch chatter in first or reverse gears
Solution: Repositioning the cross shaft bracket
Ref. Bulletin: GM Bulletin #83-93-7C, October 1983

Units diagnosed as having clutch related chatter may be corrected by repositioning the frame mounted cordon shaft bracket (cross shaft bracket) from the left hand frame rail to the cab toe panel. Complete parts list and instructions for both 2WD and 4WD vehicles are explained in detail in the GM Bulletin.

Technical Bulletin B12

Affected Vehicles: 1988-90 Chevrolet L-Body (Corsica, Beretta)
Problem: Low clutch engagement and/or difficulty in starting engine
Solution: Floor carpet / sound barrier modification
Ref. Bulletin: GM Bulletin #90-226-6A, April 1990

Low clutch engagement or excessive pedal effort for engine start may be conditions experienced in the L body vehicles. These conditions may be a result of the clutch pedal or driver's foot contacting the carpet while disengaging the clutch. To repair, trim away the sound barrier material underneath the carpet /pedal interference point until the carpet conforms to the contour of the floor pan.

Technical Bulletin B13

Affected Vehicles: 1986-94 Hyundai Excel
Problem: Bent or broken clutch fork roll pins
Solution: Replacement

Hyundai Excels use roll pins to connect the clutch fork to the cross shaft. These pins commonly bend or break which results in improper clutch engagement or complete clutch failure. It is advised to replace the roll pins with every clutch installation. 1986-1989 use Hyundai #14311-06225, 1990-1992 use Hyundai #14311-08255.

Technical Bulletin B14

Affected Vehicles: 1983-88 Ford F250/350 trucks
Problem: High pedal effort
Solution: Periodic release bearing lubrication
Ref. Bulletin: Ford Article 88-18-10

Ford recommends lubricating the release bearing at every oil change interval. Apply the lubricant as follows:

1. Remove the clutch hydraulic slave cylinder from the transmission bell housing.
2. Remove the clutch release lever and rubber shield from the bell housing.
3. Using a long screwdriver, apply a multi-purpose long-life lubricant to the bearing retainer through the bell housing opening.
4. Slide the release bearing on the retainer to spread the grease.

Be sure not to apply an excessive amount of grease in order to avoid contaminating the disc's friction material. Use only an approved lubricant; do not apply materials such as anti-seize.

Technical Bulletin B15

Affected Vehicles: 1993-97 Ford Aerostar, Bronco, Explorer, F150/250/350, F-47, Ranger
Problem: Soft pedal or failure to release caused by air in the hydraulic system
Solution: New bleeding procedures
Ref. Bulletin: Ford Article 93-12-19

The clutch hydraulic system for the 1993 model year is new and more difficult to bleed than the previous hydraulic system. Therefore, a different bleeding procedure is required for these vehicles.

The compact vehicles' master cylinder is mounted in a downward angle which makes it difficult for air to escape up into the reservoir. Therefore, removing the master cylinder is required for proper bleeding. The Ford bulletin provides corrections for Service Manual procedures for bleeding the systems on the full-size vehicles with either concentric or external slave cylinders.

© 2014 ZF North American Operations, Inc. All Rights Reserved. No portion of this work may be reproduced or copied by any means without the prior approval of ZF North American Operations, Inc.

Technical Bulletin B16

Affected Vehicles: 1994 Ford Mustang 5.0L engine with a T50D transmission built through 4/25/94
Problem: Noise, vibration
Solution: Install isolator/damper to the clutch release lever
Ref. Bulletin: Ford Article 94-20-7

A growling noise and/or a vibration is experienced when the clutch pedal is depressed at 3500 rpm's or higher. The clutch fork-to-cable attach point is the location of the noise, and can be eliminated with the installation of an isolator/ damper assembly, Ford part number F4ZZ-7C530-A.

Technical Bulletin B17

Affected Vehicles: 1990-91 Nissan 300ZX turbo
Problem: Clutch slippage
Solution: Install new master cylinder and return spring
Ref. Bulletin: Nissan MT92-006

Nissan recommends replacing both the clutch master cylinder and the pedal return spring with new part numbers to eliminate clutch slipping problems.

Technical Bulletin B18

Affected Vehicles: 1990 Toyota pickup V6
Problem: Release bearing squeal
Solution: Replacement of the clutch release cylinder
Ref. Bulletin: Toyota 032

The release bearing may squeal in V6 powered trucks when it is initially started and driven. The squeal will only occur during the first five minutes of operation. The squeal can be attributed to a lighter than required preload from the release cylinder which allows the clutch cover's spring fingers to slide across the releaser. This condition continues until the releaser's seal and grease warm up enough to allow the releaser to stop slipping and completely contact the spring fingers. Toyota recommends replacing the release cylinder with a new part #31470-35100. Please note that this bulletin does not apply if the squeal continues after vehicle warm-up or when the clutch pedal is depressed.

Technical Bulletin B19

Affected Vehicles: 1994 Jeep Cherokee, Wrangler
Problem: Premature clutch slippage and reduced wear capacity
Solution: Repair shim installation
Ref. Bulletin: Jeep #06-03-94

All manual transmission equipped 1994 Cherokees and Wranglers may experience clutch slippage once the clutch is 2/3 worn. This may be due to insufficient clearance between the clutch housing and the slave cylinder. To resolve this condition, a special 5mm shim from Jeep (part number 4797072) is to be installed to provide additional travel for the clutch slave cylinder. The additional travel will allow complete engagement of the clutch and eliminate the previous partial-release condition.

Technical Bulletin B22

Affected Vehicles: General Motors and Jeep models
Kit Numbers: K0059-03, K1675-22, K1675-23, K1890-03, K1890-04, K1914-03, K1914-06
Subject: Hydraulic concentric slave cylinders

These kits include a hydraulic release bearing assembly known as a concentric slave cylinder. The most important caution when handling these slave cylinders is not to cut or disturb the plastic straps on the outside of the unit. The straps hold the assembly in its proper orientation for installation. The straps are designed to release themselves the first time the clutch pedal is depressed and the clutch is actuated. Also, these units are supplied with a new pin and retaining nut that should be used (do not reuse the old components). Finally, care must be taken when handling the hydraulic lines. Do not bend or twist the lines, as any damage will affect the integrity of the unit.

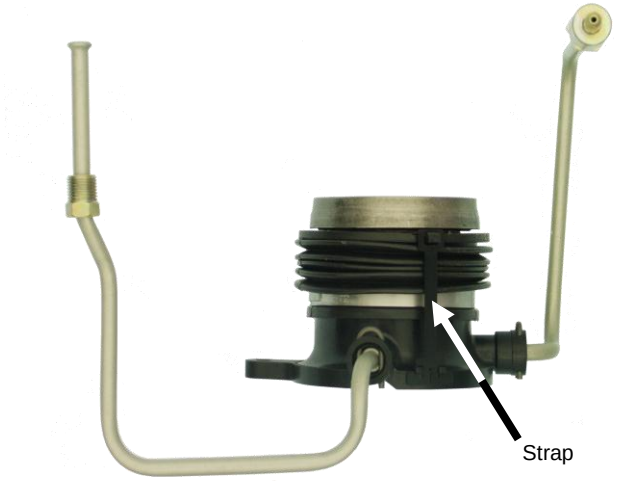

© 2014 ZF North American Operations, Inc. All Rights Reserved. No portion of this work may be reproduced or copied by any means without the prior approval of ZF North American Operations, Inc.

Technical Bulletin B23

Affected Vehicles: 1991-94 Isuzu Rodeo
Kit Numbers: KF707-01, KF707-02, K70107-01, K70046-01, K1904-01
Subject: BW vs. MUA transmission identification

During 1991-1994, the Rodeo was equipped with one of two different transmissions, which will determine the correct clutch kit to be used. To make this determination, the transmission option code can be read from the identification plate mounted on the firewall of the vehicle. The option codes are as follows.

Option Code “RMN”	=	MUA Transmission
Option Code “MM5”	=	BW Transmission

Technical Bulletin B24

Affected Vehicles: Chevrolet Camaro, Corvette and Pontiac Firebird, GTO with pull-type clutch
Kit Numbers: K70043-01, K70184-01, K70185-01
Subject: Flywheel resurfacing

The clutch cover used on these GM vehicles is a pull-type unit, which is a different configuration from the more conventional push-type. These units may experience release system problems if the flywheel is resurfaced during the clutch replacement. For this reason, replacing the flywheel is recommended.

Technical Bulletin B25

Affected Vehicles: 1990-96 Nissan 300ZX
Kit Numbers: KF630-02, KF729-01, PC630-02, PC729-01
Subject: Flywheel resurfacing

The release system on the 300ZX does not allow for a flywheel cut of any more than .003” without causing problems. As most normal resurfacing exceeds this amount, the flywheel should always be replaced when installing a new clutch on this vehicle.

Technical Bulletin B26

Affected Vehicles: Nissan Maxima
Subject: Premature bearing quill wear

The Maxima has a release bearing quill that is made of aluminum and is subject to wear and galling. If the quill has been worn undersize, or burrs exist, the release bearing could bind and be prevented from sliding. This would lead to a hard or sticking pedal, and result in release problems and bearing failure. Proper lubrication of the new release bearing and dressing of the quill is important when installing a new clutch. Since the quill is part of the front transmission case, the remedy for a worn quill is a case replacement.

© 2014 ZF North American Operations, Inc. All Rights Reserved. No portion of this work may be reproduced or copied by any means without the prior approval of ZF North American Operations, Inc.

Technical Bulletin B27

Affected Vehicles: All clutch kits with hydraulic release systems
Problem: Possible no release condition
Solution: Hydraulic system bleed procedures

The hydraulic release system should be bled whenever a new clutch is installed, or whenever any part of the system has been removed, or whenever the fluid level in the master cylinder reservoir has been allowed to fall so low that air may have been drawn into the system. Always refer to the specific manufacturer's service procedures for the specific vehicle however, here is a generic bleed system procedure.

Note: In no release situations, air in the clutch hydraulic system is most common cause of problems.

- Fill the master cylinder reservoir with new hydraulic fluid specified by the vehicle manufacturer. Do not use fluid from a previously opened container, which may already contain moisture or contaminants. Use care, as most fluids will cause damage to painted surfaces on contact.
- Raise the vehicle and support it securely on jack-stands or equivalent supports.
- If necessary, remove or loosen the slave cylinder to insure the bleed port is at the uppermost point of the slave cylinder. Remove the dust cap (if equipped) and push a length of plastic hose over the fitting. Place the other end of the hose in a clear container with about two inches of hydraulic fluid. The end of the hose must be immersed in the fluid in the bottom of the container.
- Have an assistant depress the clutch pedal and hold it. Open the bleeder valve on the slave cylinder, allowing air and fluid to flow through the hose. Close the bleeder valve when no more fluid flows through it, and have the assistant release the pedal.
- Repeat the process until all air is evacuated from the system. Keep a close watch on the fluid level in the master cylinder reservoir. Do not let the fluid level drop below the low-level indicator, as it is possible to re-introduce air back into the system.

These are general guidelines to hydraulic system bleed procedures. Each vehicle manufacturer has specific details and instructions pertinent to the individual vehicle. It is strongly advised to obtain and follow these detailed instructions whenever bleed system problems are encountered.

Technical Bulletin B29

Affected Vehicles: Hydraulic slave cylinders without bleed screws
Problem: No bleed port present on new slave cylinder
Solution: Specific bleed procedures outlined below

You can not use standard bleeding procedures when replacing a clutch slave cylinder that does not have a standard bleed port. The following is the suggested procedures to use with these slave cylinders.

- Push the slave cylinder pushrod in and disconnect both ends of the retaining strap. Do not cut the straps, just disconnect the ends of the straps. Release the pushrod and allow it to fully extend.
- Tilt the slave cylinder to a 45 degree angle and pour new clean hydraulic fluid into the hydraulic feed line port until all the air has been expelled, and it is filled with new hydraulic fluid.
- With the slave cylinder still at a 45-degree angle insert the clutch hydraulic line into the port on the slave cylinder. Always inspect the seal and the end of the hydraulic line for damage or deterioration, and repair or replace as necessary.
- Insert the retaining pin for the hydraulic line into the slave cylinder and drive it into place carefully with a punch.
- With the master cylinder reservoir cap removed, slowly stroke the slave cylinder pushrod back into the slave cylinder, and reconnect the retaining strap previously removed.

The slave cylinder is now ready for installation into the vehicle. In some instances it may be necessary to repeat this procedure to insure the hydraulic system is completely free of air.

© 2014 ZF North American Operations, Inc. All Rights Reserved. No portion of this work may be reproduced or copied by any means without the prior approval of ZF North American Operations, Inc.

Technical Bulletin B30

Affected Vehicles: All vehicles using a dual mass flywheel
Subject: Installation and warranty information

The dual mass flywheel is installed in basically the same manner as a conventional flywheel. Before installation, insure the mounting flange on the crank- shaft is clean, and free of nicks, burrs, and anything that would prevent improper mounting. Take care to reinstall the flywheel correctly, as they are designed to be mounted only one way. If improperly installed, an imbalance and vibration will result during vehicle operation. Apply a hydraulic thread sealant to the threads of the mounting bolts. This is critical so as to keep crankcase oil from contaminating the clutch and flywheel. Always refer to the manufacturer's specifications for specific installation guidelines, and torque specifications for correct installation.

Dual mass flywheels are designed to operate under proper conditions. If the vehicle is running poorly, is overloaded or abused the service life of the dual mass flywheel will be considerably shortened. Signs of abuse and overloading are damage to the damper springs and nylon spring seats in the flywheel, overheating and discoloration of the friction surface, and evidence of metal or materials coming out of the flywheel. Any of these signs are not a defect in materials or workmanship and will **NOT** be eligible for any type of warranty consideration.

Technical Bulletin B31

Affected Vehicles: 1994 Volkswagen Jetta
Kit Number: K70128-03, K70037-04
Subject: Installation precautions

A small number of 1994 Volkswagen Jetta's have a flywheel casting that does not allow the K70128-03 or K70037-04 to be used. The flywheels in question are easily identifiable. If the flywheel has the identification of "made in Mexico" they will not work with the kits K70128-03 or K70037-04. The remedy for this problem is replacement of the flywheel.

Technical Bulletin B32

Affected Vehicles: Clutch kits with cam hub vs. non-cam hub discs

A cam hub clutch disc has a second stage damper that is designed to cushion vibrations and eliminate gear rattle present in internal combustion engines. A nylon or polimide ring around the hub of the disc can usually identify it. This ring is part of the cam hub device and is commonly black or white. A cam hub disc can always be interchanged with a non-cam hub disc; they are interchangeable. In many cases the vibrations present can be heard and felt as a gear rattle when the clutch is engaged and the transmission is in neutral. Without a cam hub disc, the engine vibration can be transferred to the clutch and then into the interior of the vehicle. A cam hub disc is designed to absorb these vibrations and lessen the amount of noticeable noise and vibration transferred to the clutch pedal and the gearshift lever.

Technical Bulletin B33

Affected Vehicles: Ford F Series 7.5L trucks
Kit Number: K0058-01, K0058-01HD
Subject: The disc in the kit is approximately 3/8 inch smaller in diameter than the pressure plate

The disc enclosed in the kit K0058-01 is an 11 1/2 inch disc and the pressure plate is an 11 7/8 inch unit. This is a replacement part with a smaller diameter disc. There is no problem with the kit. The disc lining material has been reduced in width to effectively increase clamp load and transmit more torque.

© 2014 ZF North American Operations, Inc. All Rights Reserved. No portion of this work may be reproduced or copied by any means without the prior approval of ZF North American Operations, Inc.

Technical Bulletin B34

Affected Vehicles: Nissan models with releasers that must be pressed on bearing carrier
Part Number: Kits using releaser SB770
Subject: Installation precautions

It is possible to install the releaser incorrectly on the bearing carrier, and install the releaser backwards. The correct installation is achieved when the rounded hard steel side of the releaser faces the diaphragm spring fingers of the pressure plate. When the releaser is installed backwards, the stamped steel side of the bearing (which usually has part numbers stamped on it) faces the pressure plate. If installed backwards, the releaser will make noise immediately after installation.

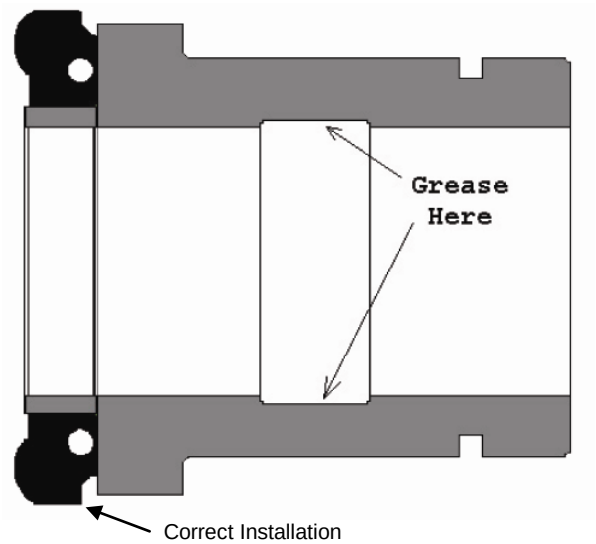

Correct Installation

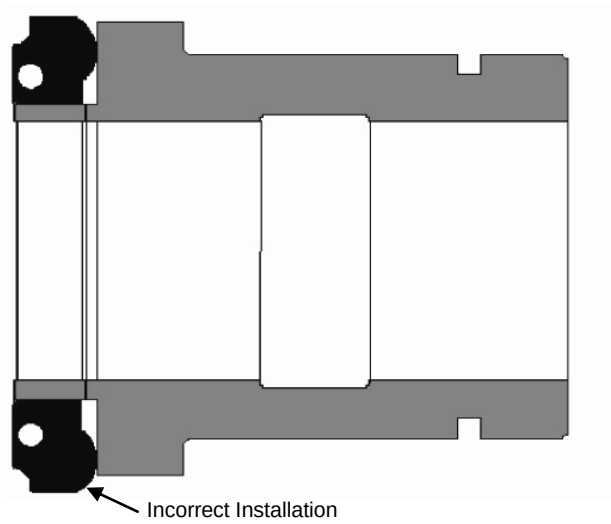

Incorrect Installation

Technical Bulletin B35

Affected Vehicles: 1964-1970 Volkswagen models
Kit Number: KF193-01, KF193-02 or pressure plate SC193 (AMTX1154)
Subject: Flywheel step critical in this application

The Sachs Pressure Plate SC193 (AMTX1154) MUST be used with the flywheel having a step dimension of .827" (+/-.005"), or 21.00 mm (+/-.13mm). Failure to machine this step correctly may cause diaphragm spring damage, no release conditions, slipping conditions or other clutch system problems. For every clutch replacement it is important to machine the flywheel to insure correct operation and satisfactory service life of the clutch. It is especially critical that the step dimension on a flywheel be machined to the vehicle manufacturer's specifications. Do not simply remove the same amount of material from the friction surface and the pressure plate-mounting surface.

Technical Bulletin B36

Affected Vehicles: Chevrolet Camaro, Corvette and Pontiac Firebird
Kit Number: K70185-01
Subject: Installation precautions

The driveline in these vehicles is unusually sensitive to vibrations. Therefore, the flywheel is designed to accommodate up to 24 balance weights to eliminate them.

When replacing the flywheel, ensure that new balance weights are placed in the same position relative to the crankshaft dowel to maintain external factory balance on the engine. Place the old flywheel face down, and position the new flywheel in the same orientation, observing the crankshaft dowel pin hole. Place the balance weights in the same locations on the new flywheel as they are on the old flywheel. Install the crankshaft bolts with Loctite® 262 (or similar product) to prevent oil leakage. Torque the crankshaft bolts evenly to 74-ft. lbs (100 Nm). Install the pressure plate, tightening the mounting bolts in a star pattern to prevent distortion. **Do not use pneumatic tools** – hand tighten only. Torque mounting bolts on the pressure place to 30-ft. lbs. (41 Nm).

© 2014 ZF North American Operations, Inc. All Rights Reserved. No portion of this work may be reproduced or copied by any means without the prior approval of ZF North American Operations, Inc.

Technical Bulletin B37

Affected Vehicles: All clutch systems with hydraulic release systems
Problem: Air in hydraulic system, no release in clutch system
Solution: Follow bleed procedures

The hydraulic release system should be bled whenever:

- A new hydraulic system part is installed
- Whenever any part of the system has been removed
- The fluid level in the master cylinder reservoir has been allowed to fall below the indicated minimum level. Always refer to the manufacture's ser-vice procedures for the specific application involved

Please refer to the instructions on page 212 for the hydraulic bleed procedures.

Technical Bulletin B38

Affected Vehicles: Vehicles with self-adjusting pressure plates with a retainer
Kit Number: K70280-01, K70281-01
Subject: Correct installation procedures

The pressure plates in the kits listed above are self-adjusting units that require special precautions to insure the clutch will work correctly. There is a multi-fingered retainer on the diaphragm spring that is installed at the factory. This retainer **MUST NOT BE REMOVED** until the pressure plate is installed and torqued to the flywheel. The small hex opening in this multi-fingered retainer prevents the use of normal disc alignment tools. There are special short alignment tools that are available from a BMW dealership, or a suitable tool can be shortened so the alignment tool does not extend past the hub of the disc.

1. Install the special alignment tool in the disc and the pilot bearing (making sure to observe the "engine side/transmission side" orientation of the disc).

2. Align the pressure plate on the dowel pins and install the disc/pressure plate combination on the flywheel.

3. After the pressure plate has been tightened down, remove the multi-fingered retainer by turning with a hex socket (a slight snapping of the diaphragm spring while removing the retainer is possible).

4. Remove the alignment tool and continue with the clutch installation.

Failure to follow the procedure will result in a non-functioning clutch.

The BMW part numbers for the special alignment tools are: 21 2 141, 21 2 142 and 21 2 201

Consult your BMW dealer for details.

Technical Bulletin B39

Affected Vehicles: 1994-2009 Dodge & Mitsubishi trucks
Kit Number: K70144-02
Subject: Size of disc/revised disc in kit

The disc and pressure plate supplied in this kit is 12". The larger disc is an updated unit to improve clutch capacity and increase service life. The vehicle may contain an 11" unit, however the replacement is now a 12" kit.

Technical Bulletin B41

Affected Vehicles: Honda Accord
Part Number: SH5187
Subject: RE-USE of old pushrod damper clevis

Installation instructions are as follows:

The pushrod will have to be adjusted to a length of 109.70 +/- 0.50 mm measured from the master cylinder mounting face (without gasket) attached to the center of the clevis eye end. Then the jam nut will have to be torqued to 5.7 / 7.3 Nm.

If the length of the pushrod is not properly adjusted within the specifications, the system could be put into cut-off.

To verify that the system is not in cut off:

After the clevis and pushrod are reinstalled, the technician should remove the reservoir cap and diaphragm and push the clutch pedal down ~ 10 mm. If a jet of fluid is observed in the reservoir, the system is working properly.

© 2014 ZF North American Operations, Inc. All Rights Reserved. No portion of this work may be reproduced or copied by any means without the prior approval of ZF North American Operations, Inc.

Technical Bulletin B42

Affected Vehicles: Hyundai Elantra, Tiburon
Kit Number: K70178-01
Subject: During assembly disc damper contacts pressure plate

When assembling this pull style clutch kit, the pressure plate diaphragm spring fingers come into contact with the clutch disc damper assembly. This is a normal condition. As the pressure plate bolts are tightened, the diaphragm spring fingers lift up, resulting in no contact. It is extremely important that the pressure plate bolts be tightened in a star pattern (half a turn at a time) and only with hand tools. Torque to 16 ft lbs for the pressure plate to flywheel bolts. **DO NOT insert the release bearing into the pressure plate.** Install the release bearing on the bearing quill/sleeve, and to the release bearing fork. Reinstall the transmission, and with the engine off, press the release bearing fork so the release bearing travels to the diaphragm spring retainer (the opposite direction the release system would travel the fork). A click is heard when the bearing locks into the diaphragm spring of the pressure plate.

Technical Bulletin B43

Affected Vehicles: Subaru Legacy, Impreza, Forester
Kit Number: KF738-02, PC738-02
Problem: Clutch pedal sticking to floor, spongy pedal
Solution: Replace clutch hose and slave cylinder
Ref. Bulletin: Subaru Bulletin #03-52-03R

Problems of a clutch pedal sticking to the floor, a spongy clutch pedal or a light feel in the clutch pedal can be addressed with the Subaru Bulletin #03-52-03R. Model years affected are from 1995 thru 2003. The required repairs involve a replacement clutch hose (Subaru part number 37251AC001) and hose gaskets (Subaru part number 114130151 x2) and the slave cylinder. For specific information please refer to the Subaru Bulletin.

Technical Bulletin B44

Affected Vehicles: Ford F Series trucks
Kit Number: K70241-01, K70241-01HD, K70241-01KL, K70241-01CB
Problem: No release, low clutch pedal engagement, hard shifting
Solution: Replace clutch hose, clutch pedal assembly, various clutch release system parts.
Ref. Bulletin: Ford Bulletin #99-1-6

Problems of low clutch pedal engagement, hard shifting, no release, please refer to the Ford Bulletin.

Technical Bulletin B45

Affected Vehicles: Ford Mustang
Kit Number: K70428-01
Subject: Shim installation

To install the shim, you must remove the hydraulic throw out bearing by removing the two 10mm bolts and plastic clip that holds the hydraulic line connector inside the transmission bell housing. Place the shim behind the throw out bearing and replace bearing. Torque the two 10mm bolts to 8 ft.-lbs.

ATTENTION: You must vacuum bleed the hydraulic system for proper operation. Refer to original equipment manual for detailed procedure.

© 2014 ZF North American Operations, Inc. All Rights Reserved. No portion of this work may be reproduced or copied by any means without the prior approval of ZF North American Operations, Inc.

Technical Bulletin B46

Affected Vehicles: International BD-engine & V-engine trucks
Kit Number: K0504-01
Subject: Remove shipping bolts

This clutch kit comes with shipping bolts that need to be **removed** after installation.

Remove these bolts after installation.

Technical Bulletin B47

Affected Vehicles: Ford F Series, GM and Dodge trucks
Kit Number: K70119-01HD, CB & KL, K70187-02HD & CB, K70188-01HD, K70241-01HD & CB, K70244-01HD, K70253-02HD, CB & KL, K70263-01HD & CB, and K70279-01HD & KL
Problem: Possibility of increased noise and vibration when changing from standard to optional HD, KL or CB optional kits
Solution: Advise customer before installation of the change between standard and optional HD, KL and CB kits

When changing from a standard clutch kit to any one of the kits mentioned above, the damper package (spring package) in the disc is dramatically strengthened. This change in the damper of the disc may result in increased noise from the Drivetrain. Before installing these kits it is advisable to consult with the owner/operator of the vehicle that this increase in noise and or vibration may be present in neutral or in gear. While this noise is not a defect it is a direct result of selecting one of the heavy duty options for the clutch kit.

© 2014 ZF North American Operations, Inc. All Rights Reserved. No portion of this work may be reproduced or copied by any means without the prior approval of ZF North American Operations, Inc.

Inspection & Installation

1. Evaluate the clutch system prior to teardown recognizing pedal effort, noise, drivability issues, etc. After clutch is removed check that wear characteristics or failed parts match the reason for clutch replacement by closely inspecting parts for any problems that may have existed. Take note of disc orientation when installed with opposing parts.

2. **Compare** the parts removed with the new parts, inspecting pressure plate diameter, spline size, and release bearing dimensions.

3. **Always inspect flywheel** for cracks, scoring, loose or worn guide pins, and hot spots. The flywheel must be resurfaced or replaced to prevent premature clutch failure. Failure to comply will void the warranty.

4. **Inspect the releaser guide tube** for wear or galling and replace if necessary. A tube worn even slightly undersized or having nicks that prevent the releaser from siding smoothly, may cause the releaser to bind increasing pedal effort causing improper release, or chatter and can reduce the clutch's service life.

5. Inspect the release fork, pivot stud, and cross-shaft bushings for wear or damage and replace as necessary. Stamped steel forks are susceptible to bending and should be replaced as part of a thorough clutch installation.

6. Clean and inspect the splines of the transmission input shaft. **Lightly grease** the splines with high temp grease and, make sure to avoid contact with the clutch disc lining material. Slide the new clutch disc on the input shaft to insure smooth travel. Wipe off any excess grease.

7. **Always** replace the pilot bushing or bearing if applicable. Only apply a light coat of SAE 30 motor oil to pilot bushings or high temperature bearing grease to needle-type pilot bearings.

8. **Clean the flywheel and pressure plate surfaces** with a quality brake cleaner or alcohol-based solvent. Any oil or rust preventative can contaminate the disc linings and cause slipping or chatter.

9. Using an alignment tool position the clutch disc against the flywheel. Confirm the correct orientation of the clutch disc as noted in **Step 1**. If installed incorrectly the disc will interfere with the flywheel and prevent the clutch assembly from bolting up and operating correctly.

10. Install the pressure plate tightening the mounting bolts in a star pattern to prevent distortion. **Do NOT use pneumatic tools** – hand tighten only. Torque the mounting bolts to manufacturer's specifications.

11. Remove alignment tool from the clutch assembly.

12. Install the new releaser onto the guide tube and attach to the clutch fork. **Lightly lubricate** the mating surfaces between the clutch fork and releaser with high temp grease. Lubricate metal-to-metal contact points; do not lubricate plastic-to-metal contact points.

13. **Confirm** the dowel pins are in place and the engine-to-transmission mounting surfaces are flat, clean and free of any obstructions. Failure to do so will cause misalignment. The input shaft should smoothly engage the disc's splines. Do not force the transmission against the engine, as this will damage the clutch disc or transmission housing and result in premature failure to either part.

14. **Adjust the clutch release system by following the manufacturer's procedures and specifications:**
    a) Ensure the mechanical linkage is lubricated and operating properly;
    b) Clutch cables are not binding and are free of any corrosion which may inhibit smooth operation;
    c) Hydraulic systems are free from leaks and are bled correctly and completely;
    d) Refill the clutch master cylinder, being careful not to overfill.

15. **Check for proper operation of the entire clutch system**.
    a) Before starting vehicle, make sure to engage brakes, block tires and place transmission in neutral to prevent accidental movement of vehicle.
    b) Road test the vehicle and check for complete release, proper spin down, smooth engagement/disengagement and normal pedal pressure.

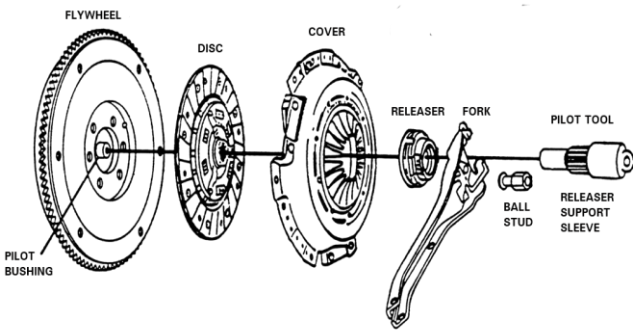

Have a question about installing a SACHS clutch kit?

ZF Services, LLC

www.zf.com/us 1-800-321-0784

© 2014 ZF North American Operations, Inc. All Rights Reserved. No portion of this work may be reproduced or copied by any means without the prior approval of ZF North American Operations, Inc.

Clutch Releaser Lubrication

1. **Metallic Releasers = To Be Greased:** All metallic sleeve releasers have a grease groove in the bore of the sleeve. If it is not greased, fill the groove *with high temperature wheel bearing grease.*

2. **Non-Metallic Releasers = Pre-Greased:** Some recent clutch releasers now incorporate a non-metallic (plastic) sleeve or a metallic sleeve with plastic wear surfaces. If grease is required, the clutch releaser will generally have been greased.

3. **Non-Metallic Releasers = *Not* To Be Greased:** This type of clutch releaser will have a non-metallic sleeve with multiple grooves running from front to back in the sleeve. The unit is installed without grease on a clean guide tube. Examples: Volvo 4 cyl., Porsche 911 3.6L 89-92, 911 3.2L , 928S 87-91, most BMW's, Audi 1988 and up.

- Never over lubricate or use the wrong type of lubrication such as "anti-seize". Use only Sachs spline lube or high temperature wheel bearing grease. Excessive lubrication may contaminate the friction surfaces and cause slippage and clutch failure.

- The guide tube must be checked for scratches and wear. Measure the outside diameter of the guide tube to see if it is worn undersize, compare to an unworn section of the guide tube.

These are general guidelines - always refer to vehicle service manuals when installing a clutch.

Pilot Bushing/Bearing Lubrication

Bushings – Do not use grease, only apply a light coating of SAE 30 motor oil on the friction surface. These bushings are made from an oil-impregnated material, and are self-lubricating throughout their service life. Any grease applied to these bushings will clog the oil pores and actually increase the friction between the bushing and transmission input shaft. This will lead to galling, noise, and premature bearing failure.

Bearings – A light coating of high-temperature bearing grease may be applied to needle-type bearings.

Self-Aligning Clutch Releaser

New self-aligning releasers, when examined, may raise question due to the inner collar being slightly off center. The collar of the releaser may not be centered in the bearing's contact ring. However, the self-aligning feature will automatically center the contact ring on the clutch's diaphragm fingers when the releaser and clutch assembly are installed in the vehicle.

Replacing a Lever-Type Cover with a Diaphragm-Type Clutch Cover

In many cases, Sachs offers both the original lever-type clutch as well as an optional diaphragm-type clutch for older vehicle applications. Due to the high pedal effort associated with a lever-type clutch, many vehicle manufacturers equipped the clutch pedal with an assist spring to help the driver keep the pedal depressed during shifting.

Due to their design, a diaphragm-type clutch requires a much lower pedal effort to operate the clutch, while still achieving the same clamp load as the lever-type unit. This lower pedal effort may eliminate the need for the original assist spring, and in fact may cause the pedal to stay at the floor when it is depressed. In these cases, the assist spring should be removed from the clutch pedal. As this spring is under tension, please use caution when removing it from the pedal assembly.

Flywheel & Pressure Plate Cleaning

- **Always clean the flywheel and pressure plate friction surface with a quality brake cleaner or alcohol-based solvent before the clutch assembly is installed.**

Allow the parts to dry completely before the clutch is installed. The new pressure plate comes lightly coated with an oil-based rust preventative, and the flywheel may still have oil or cutting fluid on its surface. These materials will contaminate the clutch disc linings and cause slipping or chatter.

© 2014 ZF North American Operations, Inc. All Rights Reserved. No portion of this work may be reproduced or copied by any means without the prior approval of ZF North American Operations, Inc.

Oil Contamination

- **The installer must always remove oil and grease from his/her hands prior to installing the clutch.**

Any oil or grease that comes in contact with the disc's linings will contaminate the friction material and cause chatter or slipping.

- **Always repair a leaking engine's rear main seal or transmission's front seal before a new clutch is installed.**

Bad seals will allow oil to enter the bell housing and contaminate the disc friction material and cause premature clutch failure.

Proper Disc Orientation – Engine Side vs. Trans Side

The raised center-section side of the clutch disc must always be installed as the transmission side, with the exception of pull-type clutches. The raised portion of the disc must be positioned into the opening in the center of the pressure plate. If installed incorrectly, the disc will interfere with the flywheel and prevent the clutch assembly from bolting up and operating correctly.

PreDamper vs. Non-PreDamper/ Cam Hub vs. Non-Cam Hub Discs

Pre-dampers and cam-hubs are devices in the clutch disc designed to cushion vibrations and eliminate neutral gear rattle. These engine vibrations are pulsations of the crankshaft that are transmitted to the driveline. In many cases, the vibrations can be heard and felt as gears rattle when the clutch is engaged and the transmission is in neutral. Without a pre-damper disc, the engine vibration can transfer to the clutch and then to the transmission input shaft through the clutch disc. A dampened disc is designed to absorb the engine vibrations so that the input shaft is unaffected.

© 2014 ZF North American Operations, Inc. All Rights Reserved. No portion of this work may be reproduced or copied by any means without the prior approval of ZF North American Operations, Inc.

Checking the Installed Clutch

After installing the clutch, it is necessary to test the system by using the 3 steps listed below.

It is important for all the clutch parts to have reached their operating temperature before performing the prescribed test. Operating temperature can best be achieved by a short test drive using the clutch as often as possible.

1. Starting Behavior

As a prerequisite for this test, check, and if need be, precisely adjust the specified pedal play at 20…30mm – or what is even safer – the clutch lever play at 2…3mm.

This does not apply to self-adjusting releasers.

The pedal pressure shall not significantly vary from the normal average pressure. The clutch pedal must return to its exact original position when released.

When starting with a load or on a gradient the clutch should smoothly engage and allow jerk-free acceleration.

The engine speed should be increased to about twice the idling speed, while the clutch is rapidly engaged at the same time.

2. Clutch Disengagement

It should be possible to engage the reverse gear -–or the first gear in non-synchronized gearboxes –without any noise with the clutch fully disengaged and the engine idling, after waiting 3…4 seconds.

This test can be completed while the clutch pedal is held down by:

a) First shifting into a gear;
b) Second, shift out of it;
c) Then, engage that gear again.

During this procedure, there should be no sound when the gear is engaged the second time.

The waiting time varies according to the size and design of the clutch and gearbox. It must be taken into account when considering the time required for the masses rotating with the clutch to stop completely.

3. Torque Capacity

The following is the best way to find out whether the clutch still has sufficient torque transmission capacity:

a. Pull the parking brake all the way and shift into the highest (lowest transmission ratio) forward gear (4th or 5th).
b. Increase the engine speed to the range where the maximum torque is achieved.
c. Engage the clutch abruptly (1/2 second maximum), pushing the accelerator to the floor at the same time.

If the clutch condition is OK, the engine will stall immediately.

If the clutch slips for a relatively long time, or if the engine speed goes up, the torque transmission capacity is too low, and the clutch must be replaced.

Attention:

As the clutch is subjected to extreme temperatures during this test, it may not be carried out more than two times in a row.

© 2014 ZF North American Operations, Inc. All Rights Reserved. No portion of this work may be reproduced or copied by any means without the prior approval of ZF North American Operations, Inc.

These are general guidelines to hydraulic system bleed procedures. Each vehicle manufacturer has specific details and instructions pertinent to the individual vehicle. It is strongly advised to obtain and follow these detailed instructions whenever bleed system problems are encountered.

Instructions for vehicles that have bleed ports on the slave cylinder:

1. Fill the master cylinder reservoir with new hydraulic fluid specified by the vehicle manufacturer. Do not use fluid from a previously opened container, which may already contain moisture or contaminants. Use care, as most fluids will cause damage to painted surfaces on contact.

2. Raise the vehicle and support it securely on jack-stands or equivalent supports.

3. If necessary, remove or loosen the slave cylinder to insure the bleed port is at the uppermost point of the slave cylinder. Remove the dust cap (if equipped) and push a length of plastic hose over the fitting. Place the other end of the hose in a clear container with about two inches of hydraulic fluid. The end of the hose must be immersed in the fluid in the bottom of the container to prevent air from being drawn back into the hydraulic system.

4. Have an assistant slowly depress the clutch pedal and hold it. Open the bleeder valve on the slave cylinder, allowing air and fluid to flow through the hose into the container. Close the bleeder valve when no more fluid flows through it, and have the assistant release the pedal.

5. Repeat the process until all air is evacuated from the system. Keep a close watch on the fluid level in the master cylinder reservoir. Do not let the fluid level drop below the low-level indicator, as it is possible to re-introduce air back into the system.

The following test is an accurate procedure to confirm that all the air is out of the hydraulic system:

1. Push the slave cylinder piston back into its bore, and secure it there. The method of securing it can be a clamp, block of wood, band clamp or whatever means are suitable to insure the slave cylinder piston cannot move. **Take care** not to damage the slave cylinder or its piston during this procedure.

2. Once the piston is secured, go inside the vehicle and push on the clutch pedal with **your hand.** Do not press on the clutch pedal with your foot, as damage to the master cylinder or other release system components are a possibility.

3. If the system has no air in it, the pedal will be unable to move when pressed with your hand. If however the clutch pedal moves, and the slave cylinder piston cannot move, there is a problem in the hydraulic system (either air or a master cylinder problem).

When encountering difficult hydraulic systems, there are professional bleeding tools that help get the vehicle on the road faster. ZF Services, LLC offers these tools, and they also are available from tool dealers. These tools allow the user to push or pull hydraulic fluid, and help insure a trouble free installation. For availability please consult the ZF Services, LLC customer service department at 1-800-321-0784.

© 2014 ZF North American Operations, Inc. All Rights Reserved. No portion of this work may be reproduced or copied by any means without the prior approval of ZF North American Operations, Inc.

Clutch Systems Trouble Shooting Guide

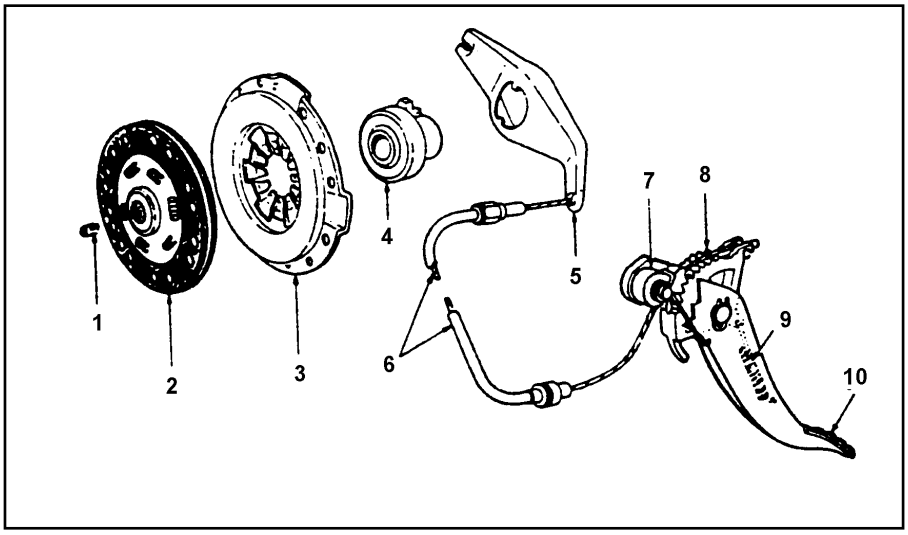

Mechanical Clutch Operation via Cable

1. pilot bearing
2. clutch disc
3. clutch cover assembly
4. releaser
5. release fork
6. clutch cable
7. automatic adjusting control
8. automatic adjusting control
9. return spring
10. clutch pedal

Clutch Grabs - Cause	What to do
Pilot bearing (1) defective, consistently moves the gear box input shaft.	Replace the pilot bearing.
Run-out of clutch disc (2) is excessive or the hub splines are damaged or fail to move easily due to corrosion.	Straighten the clutch disc. If the facings are heavily worn, replace the plate. Get the hub splines to move easily and grease them.
The wrong clutch disc (2) is installed, it is too thick.	Fit the right disc.
The facings of the clutch disc (2) stick due to oil/grease contamination or sweating of lining material.	Replace the disc. Repair oil leak.
The pressure plate (3) does not lift sufficiently (wear/brakes/cover plate deformed during mounting).	Replace the clutch cover assembly.
The required release travel at the releaser (4) cannot be ensured because the clutch cable (6) is torn or stretched or the clutch cable support is loose or broken.	Check the release mechanism. Replace worn parts. Re-adjust release travel.
The required release travel is not ensured because the teeth of the automatic adjusting control (7 and 8) are broken.	Replace the plastic quadrant and pawl.
The clutch (6) sticks in its casing: cable may be frayed or casing may need lubrication. The cable may be twisted.	Check the release mechanism. Replace worn parts. Readjust the release travel.
The engine/transmission mounts are torn or soft. Movement is transmitted to the pedal system.	Replace the rubber mounts.

Clutch Slips - Cause	What to do
The facings of the clutch disc (2) are completely worn down or the frictional coefficient is reduced due to oily/greasy/overheated facings.	Replace the clutch disc. Repair the leak.
The wrong clutch cover (3) was installed. Clamp load too low. Diaphragm spring broken.	Replace the clutch cover assembly.
The releasers (4) run under too great a pre-load or without play. The full clamp load is not exerted.	Set the right play and ensure the release system moves easily.
The clutch cable (6) moves heavily or is torn. The releaser (4) does not return to its rest position and does not allow the full clamp load.	Check the release mechanism. Replace worn parts. Readjust the releasing procedure.
Too much friction in the actuation system (4…10).	Replace worn parts and grease the joint areas.

Clutch is Noisy - Cause	What to do
The pilot bearing (1) is noisy. Noise occurs only with the clutch disengaged.	Replace the pilot bearing.
The torsional damper in the clutch disc (2) is worn out.	Replace the clutch disc.
The releaser (4) is noisy or fouls the diaphragm spring eccentrically (offset).	Eliminate offset condition. If wear occurred also replace the releaser and the clutch cover assembly.
Gears grind due to drag.	Check the clutch function. Replace damaged parts.

Clutch Drags - Cause	What to do
The facings of the clutch disc (2) are oily or greasy.	Replace the clutch disc, repair the leak.
The wrong clutch disc (2) was used.	Use the right disc.
The pressure plate lifts unevenly. Adjustment error at the cover assembly (3).	Replace the clutch cover assembly.
The releaser (4) makes sudden move. The pilot tube is worn.	Replace the releaser and pilot tube.

© 2014 ZF North American Operations, Inc. All Rights Reserved. No portion of this work may be reproduced or copied by any means without the prior approval of ZF North American Operations, Inc.

Mechanical Clutch Operation via Linkage

1. pilot bearing
2. clutch disc
3. clutch cover assembly
4. releaser
5. release fork
6. setting nut
7. linkage
8. clutch pedal

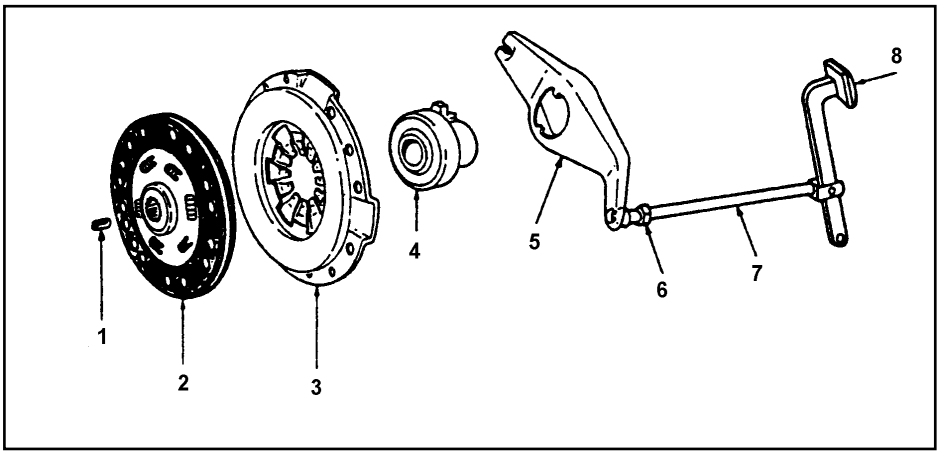

Clutch Grabs - Cause	What to do
Pilot bearing (1) defective, consistently moves the gear box input shaft.	Replace the pilot bearing.
Run-out of clutch disc (2) is excessive or the hub splines are damaged or fail to move easily due to corrosion.	Straighten the clutch disc. If the facings are heavily worn, replace the plate. Get the hub splines to move easily and grease them.
The wrong clutch disc (2) is installed, it is too thick.	Fit the right disc.
The facings of the clutch disc (2) stick due to oil/grease contamination or sweating of lining material.	Replace the disc. Repair oil leak.
The pressure plate (3) does not lift sufficiently (wear/brakes/cover plate deformed during mounting).	Replace the clutch cover assembly.
The required release travel at the releaser (4) cannot be ensured because the linkage (6) is falsely connected or the joints are worn (5…8).	Check the releaser mechanism. Replace worn parts. Re-adjust release travel.
The engine/transmission mounts are torn or soft. Movement is transmitted to the pedal system.	Replace the rubber mounts.

Clutch Slips - Cause	What to do
The facings of the clutch disc (2) are completely worn down or the frictional coefficient is reduced due to oily/greasy/overheated facings.	Replace the clutch disc. Repair the leak.
The wrong clutch cover (3) was installed. Clamp load too low. Diaphragm spring broken.	Replace the clutch cover assembly.
The releasers (4) run under too great a pre-load or without play. The full clamp load is not exerted.	Set the right play and ensure the release system moves easily.
Too much friction in the actuation system (4…8).	Replace worn parts and grease the joint areas.

Clutch is Noisy - Cause	What to do
The pilot bearing (1) is noisy. Noise occurs only with the clutch disengaged.	Replace the pilot bearing.
The torsional damper in the clutch disc (2) is worn out.	Replace the clutch disc.
The releaser (4) is noisy or fouls the diaphragm spring eccentrically (offset).	Eliminate offset condition. If wear occurred also replace the releaser and the clutch cover assembly.
Gears grind due to drag.	Check the clutch function. Replace damaged parts.

Clutch Drags - Cause	What to do
The facings of the clutch disc (2) are oily or greasy.	Replace the clutch disc, repair the leak.
The wrong clutch (2) was used.	Use the right disc.
The pressure plate lifts unevenly. Adjustment error at the cover assembly (3).	Replace the clutch cover assembly.
The releaser (4) makes sudden move. The pilot tube is worn.	Replace the releaser and pilot tube.

© 2014 ZF North American Operations, Inc. All Rights Reserved. No portion of this work may be reproduced or copied by any means without the prior approval of ZF North American Operations, Inc.

Clutch Systems Trouble Shooting Guide

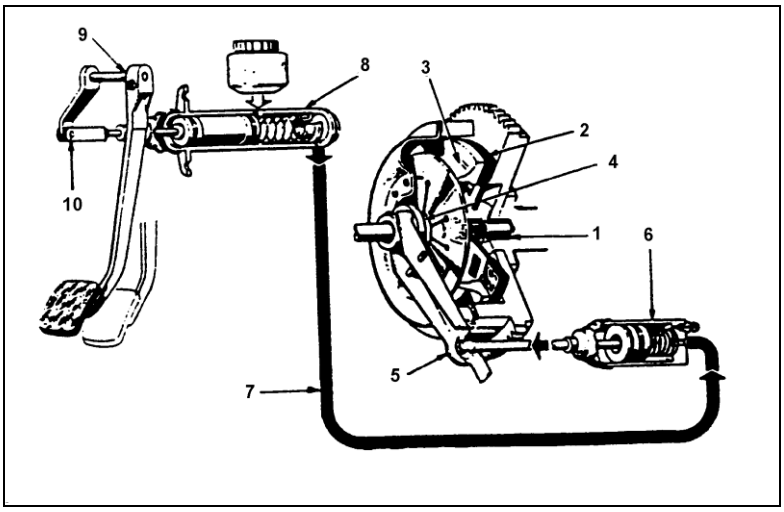

Hydraulic Clutch Operation

1. pilot bearing
2. clutch disc
3. clutch cover assembly
4. releaser
5. release fork
6. clutch cable
7. automatic adjusting control
8. automatic adjusting control
9. return spring
10. clutch pedal

Clutch Grabs - Cause	What to do
Pilot bearing (1) defective, consistently moves the gear box input shaft.	Replace the pilot bearing.
Run-out of clutch disc (2) is excessive or the hub splines are damaged or fail to move easily due to corrosion.	Straighten the clutch disc. If the facings are heavily worn, replace the plate. Get the hub splines to move easily and grease them.
The wrong clutch disc (2) is installed, it is too thick.	Fit the right disc.
The facings of the clutch disc (2) stick due to oil/grease contamination or sweating of lining material.	Replace the disc. Repair oil leak.
The pressure plate (3) does not lift sufficiently (wear/brakes/cover plate deformed during mounting).	Replace the clutch cover assembly.
The required release travel at the releaser (4) cannot be ensured, because there is air in the hydraulic system (6, 7, 8) or it has a leak.	Bleed the hydraulic system, if need be, replace worn master or clutch operating cylinders. Note: Hydraulic fluid should be changed every 2 years.
The required release travel at the releaser (4) is not ensured because the linkage is falsely adjusted or the joints (5, 9, 10) are worn.	Check the release mechanism. Replace worn parts. Re-adjust release travel.
Air in the hydraulic system (6, 7, 8) has a "bouncing" effect during engaging.	Bleed the hydraulic system, if need be, replace worn master or clutch operating cylinder.
The engine/transmission mounts are torn or soft. Movement is transmitted to the pedal system.	Replace the rubber mounts.

Clutch Slips - Cause	What to do
The facings of the clutch disc (2) are completely worn down or the frictional coefficient is reduced due to oily/greasy/overheated facings.	Replace the clutch disc. Repair the leak.
The wrong clutch cover (3) was installed. Clamp load too low. Diaphragm spring broken.	Replace the clutch cover assembly.
The releasers (4) run under too great a pre-load or without play. The full clamp load is not exerted.	Set the right play and ensure the release system moves easily.
The releaser (4) moves heavily on the pilot tube or the piston in the master (8) or clutch operating cylinder (6).	Replace the releaser and the pilot tube, if need be, also the master and operating cylinders.
Too much friction in the actuation system (5, 9, 10)	Replace worn parts and grease the joint areas.

Clutch is Noisy - Cause	What to do
The pilot bearing (1) is noisy. Noise occurs only with the clutch disengaged.	Replace the pilot bearing.
The torsional damper in the clutch disc (2) is worn out.	Replace the clutch disc.
The releaser (4) is noisy or fouls the diaphragm spring eccentrically (offset).	Eliminate offset condition. If wear occurred also replace the releaser and the clutch cover assembly.
Gears grind due to drag.	Check the clutch function. Replace damaged parts.

Clutch Drags - Cause	What to do
The facings of the clutch disc (2) are oily or greasy.	Replace the clutch disc, repair the leak.
The wrong clutch disc (2) was used.	Use the right disc.
The pressure plate lifts unevenly. Adjustment error at the cover assembly (3).	Replace the clutch cover assembly.
The releaser (4) makes sudden move. The pilot tube is worn.	Replace the releaser and pilot tube.

© 2014 ZF North American Operations, Inc. All Rights Reserved. No portion of this work may be reproduced or copied by any means without the prior approval of ZF North American Operations, Inc.